YASKAWA

A World of Automation Solutions™

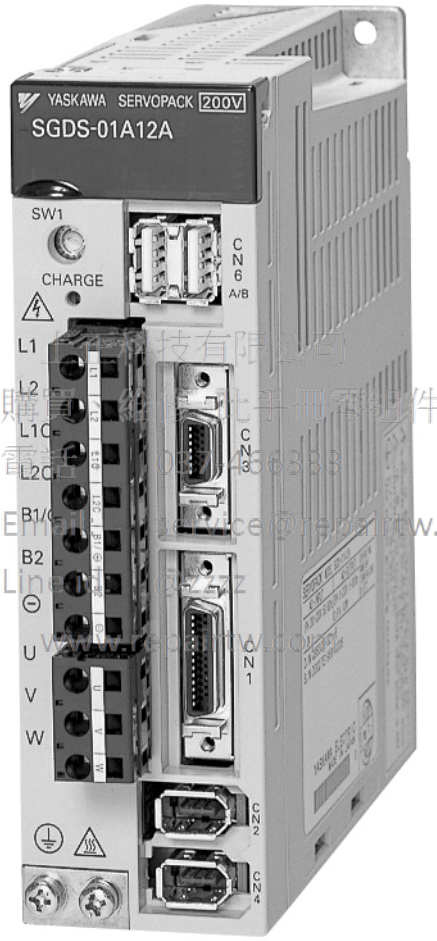

[illegible]技有限公司
購買[illegible]電子冊零組件
電話: 0[illegible]456333
Email: service@repairtw.com
Line ID: [illegible]
www.repairtw.com

SGDS Sigma III Servo Amplifier User Manual for Mechatrolink-II Communications

上正科技有限公司
購買、維修 此手冊零組件
電話： 037-466333
Email: service@repairtw.com
Line id: @zzzz
www.repairtw.com

Copyright © 2004 YASKAWA ELECTRIC CORPORATION

All rights reserved. No part of this publication may be reproduced, stored in a retrieval system, or transmitted, in any form, or by any means, mechanical, electronic, photocopying, recording, or otherwise, without the prior written permission of Yaskawa. No patent liability is assumed with respect to the use of the information contained herein. Moreover, because Yaskawa is constantly striving to improve its high-quality products, the information contained in this manual is subject to change without notice. Every precaution has been taken in the preparation of this manual. Nevertheless, Yaskawa assumes no responsibility for errors or omissions. Neither is any liability assumed for damages resulting from the use of the information contained in this publication.

About this Manual

■ Description of Technical Terms

The terms in this manual are defined as follows:

- Servomotor or motor = Σ II Series SGMAH, SGMPH, SGMSH, SGMCS (direct drive) servomotor.
- SERVOPACK = Σ III Series SGDS SERVOPACK with MECHATROLINK II interface.
- Servodrive = A set including a servomotor and servo amplifier.
- Servo System = A servo control system that includes the combination of a servodrive with a host computer and peripheral devices.
- Parameter = A parameter for the SERVOPACK

■ Quick access to your required information

Read the chapters marked with ✓ to get the information required for your purpose.

Chapter	SERVOPACKs, Servomotors, and Peripheral Devices	Ratings and Character-istics	System Design	Panel Configura-tion and Wiring	Trial Operation and Servo Adjustment	Inspection and Maintenance	Fully-closed Control
Chapter 1 Outline	✓						
Chapter 2 Selections	✓						
Chapter 3 SERVOPACK Specifications and Dimensional Drawings	✓	✓	✓	✓			
Chapter 4 Specifications and Dimensional Drawings of Cables and Peripheral Devices	✓	✓	✓	✓			
Chapter 5 Wiring			✓	✓	✓		
Chapter 6 MECHATROLINK II Communications			✓	✓	✓		
Chapter 7 Operation					✓		
Chapter 8 Adjustments						✓	
Chapter 9 Fully-closed Control							✓
Chapter 10 Inspection, Maintenance, and Troubleshooting						✓	
Chapter 11 Appendix	✓		✓		✓	✓	

上揚科技有限公司
購買、維修 此手冊零組件
電話: 037-466333
Email: service@repairtw.com
Line id: @zzzz
www.repairtw.com

■ Visual Aids

The following aids are used to indicate certain types of information for easier reference.

IMPORTANT

- Indicates important information that should be memorized, including precautions such as alarm displays, to avoid damaging the devices.

INFO

- Indicates supplemental information.

◀ EXAMPLE ▶

- Indicates application examples.

TERMS

- Indicates definitions of difficult terms or terms that have not been previously explained in this manual.

■ Indication of Reverse Signals

In this manual, the names of reverse signals (ones that are valid when low) are written with a forward slash (/) before the signal name, as shown in the following example:

- $\overline{\text{S-ON}}$ = /S-ON
- $\overline{\text{P-CON}}$ = /P-CON

上揚科技有限公司
購買、維修 此手冊零組件
電話： 037-466333
Email: service@repairtw.com
Line id: @zzzz
www.repairtw.com

Related Manuals

Refer to the following manuals as required.

Manual Name	Manual Number	Contents
Σ III Series AC SERVOPACK SGDS Safety Precautions	TOBPS80000000	Describes the safety precautions of Σ III series SERVOPACK.
Σ III Series SGM□S/SGDS Digital Operator Operation Manual	TOBPS80000001	Provides detailed information on the operation of the JUSP-OP05A Digital Operator.

Safety Information

The following conventions are used to indicate precautions in this manual. Failure to heed precautions provided in this manual can result in serious or possibly even fatal injury or damage to the products or to related equipment and systems.

⚠ WARNING — Indicates precautions that, if not heeded, could possibly result in loss of life or serious injury.

⚠ CAUTION — Indicates precautions that, if not heeded, could result in relatively serious or minor injury, damage to the product, or faulty operation.

In some situations, the precautions indicated could have serious consequences if not heeded.

⃠ PROHIBITED — Indicates prohibited actions that must not be performed. For example, this symbol would be used to indicate that fire is prohibited as follows: .

上正科技有限公司
購買、維修 此手冊零組件
電話： 037-466333
Email: service@repairtw.com
Line id: @zzz
www.repairtw.com

MANDATORY — Indicates compulsory actions that must be performed. For example, this symbol would be used as follows to indicate that grounding is compulsory: .

The warning symbols for ISO and JIS standards are different, as shown below.

ISO	JIS
⚠	◇!

The ISO symbol is used in this manual.

Both of these symbols appear on warning labels on Yaskawa products. Please abide by these warning labels regardless of which symbol is used.

Notes for Safe Operation

Read this manual thoroughly before checking products on delivery, storage and transportation, installation, wiring, operation and inspection, and disposal of the AC servo drives.

⚠ WARNING

- Never touch any rotating motor parts while the motor is running.
  Failure to observe this warning may result in injury.
- Before starting operation with a machine connected, make sure that an emergency stop can be applied at any time.
  Failure to observe this warning may result in injury.
- Never touch the inside of the SERVOPACKs.
  Failure to observe this warning may result in electric shock.
- Do not touch terminals for five minutes after the power is turned OFF.
  Residual voltage may cause electric shock.
- Do not touch terminals for five minutes after voltage resistance test.
  Residual voltage may cause electric shock.
- Follow the procedures and instructions for trial operation precisely as described in this manual.
  Malfunctions that occur after the servomotor is connected to the equipment not only damage the equipment, but may also cause an accident resulting in death or injury.
- The output range of multi-turn data for Σ-III series absolute detection system differs from that for conventional systems (15-bit encoder and 12-bit encoder). Especially when "Infinite length positioning system" of conventional type is to be configured with Σ-III series, be sure to make the system modification.
- The multi-turn limit value must be changed only for special applications.
  Changing it inappropriately or unintentionally can be dangerous.
- If the Multi-turn Limit Disagreement alarm (A.CC0) occurs, check the setting of parameter Pn205 in the SERVOPACK to be sure that it is correct.
  If Fn013 is executed when an incorrect value is set in Pn205, an incorrect value will be set in the encoder. The alarm will disappear even if an incorrect value is set, but incorrect positions will be detected, resulting in a dangerous situation where the machine will move to unexpected positions.
- Do not remove the front cover, cables, connectors, or optional items while the power is ON.
  Failure to observe this warning may result in electric shock.
- Do not damage, press, exert excessive force, or place heavy objects on the cables.
  Failure to observe this warning may result in electric shock, stopping operation of the product, or burning.
- Provide an appropriate stopping device on the machine side to ensure safety. A holding brake for a servomotor with brake is not a stopping device for ensuring safety.
  Failure to observe this warning may result in injury.
- Do not come close to the machine immediately after resetting momentary power loss to avoid an unexpected restart. Take appropriate measures to ensure safety against an unexpected restart.
  Failure to observe this warning may result in injury.

⏚
- Connect the ground terminal to electrical codes (ground resistance: 100 Ω or less).
  Improper grounding may result in electric shock or fire.

上品科技有限公司
購買、維修、此手冊零組件
電話： 037-466333
Email: service@repairtw.com
Line Id: @3333
www.repairtw.com

⚠ WARNING

- Installation, disassembly, or repair must be performed only by authorized personnel.
  Failure to observe this warning may result in electric shock or injury.
- Do not modify the product.
  Failure to observe this warning may result in injury or damage to the product.

■ Checking on Delivery

⚠ CAUTION

- Always use the servomotor and SERVOPACK in one of the specified combinations.
  Failure to observe this caution may result in fire or malfunction.

■ Storage and Transportation

上正科技有限公司
購買、維修光學與零組件
電話： 037-466333
Email: service@repairtw.com
Line id: @zzzz
www.repairtw.com

⚠ CAUTION

- Do not store or install the product in the following places.
  - Locations subject to direct sunlight.
  - Locations subject to temperatures outside the range specified in the storage or installation temperature conditions.
  - Locations subject to humidity outside the range specified in the storage or installation humidity conditions.
  - Locations subject to condensation as the result of extreme changes in temperature.
  - Locations subject to corrosive or flammable gases.
  - Locations subject to dust, salts, or iron dust.
  - Locations subject to exposure to water, oil, or chemicals.
  - Locations subject to shock or vibration.

  Failure to observe this caution may result in fire, electric shock, or damage to the product.
- Do not hold the product by the cables or motor shaft while transporting it.
  Failure to observe this caution may result in injury or malfunction.
- Do not place any load exceeding the limit specified on the packing box.
  Failure to observe this caution may result in injury or malfunction.

■ Installation

⚠ CAUTION

- Never use the products in an environment subject to water, corrosive gases, inflammable gases, or combustibles.
  Failure to observe this caution may result in electric shock or fire.
- Do not step on or place a heavy object on the product.
  Failure to observe this caution may result in injury.
- Do not cover the inlet or outlet ports and prevent any foreign objects from entering the product.
  Failure to observe this caution may cause internal elements to deteriorate resulting in malfunction or fire.
- Be sure to install the product in the correct direction.
  Failure to observe this caution may result in malfunction.
- Provide the specified clearances between the SERVOPACK and the control panel or with other devices.
  Failure to observe this caution may result in fire or malfunction.
- Do not apply any strong impact.
  Failure to observe this caution may result in malfunction.

上正科技有限公司
購買、維修 此手冊零組件
電話： 037-466333
Email: service@repairtw.com
Line id: @zzzz
www.repairtw.com

■ Wiring

⚠ CAUTION

- Do not connect a three-phase power supply to the U, V, or W output terminals.
  Failure to observe this caution may result in injury or fire.
- Securely connect the power supply terminal screws and motor output terminal screws.
  Failure to observe this caution may result in fire.
- Do not bundle or run power and signal lines together in the same duct. Keep power and signal lines separated by at least 30 cm (11.81 in).
- Use twisted-pair shielded wires or multi-core twisted pair shielded wires for signal and encoder (PG) feedback lines.
  The maximum length is 3 m (118.11 in) for reference input lines and is 20 m (787.40 in) for PG feedback lines.
- Do not touch the power terminals for five minutes after turning power OFF because high voltage may still remain in the SERVOPACK.
  Make sure the charge indicator is out first before starting an inspection.
- Avoid frequently turning power ON and OFF. Do not turn power ON or OFF more than once per minute.
  Since the SERVOPACK has a capacitor in the power supply, a high charging current flows for 0.2 seconds when power is turned ON. Frequently turning power ON and OFF causes main power devices like capacitors and fuses to deteriorate, resulting in unexpected problems.
- Observe the following precautions when wiring main circuit terminal blocks.
  - Remove the terminal block from the SERVOPACK prior to wiring.
  - Insert only one wire per terminal on the terminal block.
  - Make sure that the core wire is not electrically shorted to adjacent core wires.
- Do not connect the SERVOPACK for 100 V and 200 V directly to a voltage of 400 V.
  The SERVOPACK will be destroyed.
- Install the battery at either the host controller or the battery case of the encoder.
  It is dangerous to install batteries at both simultaneously, because that sets up a loop circuit between the batteries.
- Be sure to wire correctly and securely.
  Failure to observe this caution may result in motor overrun, injury, or malfunction.
- Always use the specified power supply voltage.
  An incorrect voltage may result in burning.
- Take appropriate measures to ensure that the input power supply is supplied within the specified voltage fluctuation range. Be particularly careful in places where the power supply is unstable.
  An incorrect power supply may result in damage to the product.
- Install external brakers or other safety devices against short-circuiting in external wiring.
  Failure to observe this caution may result in fire.

上位科技有限公司
購買、維修 此手冊零組件
電話： 037-406333
Email: service@repairtw.com
Line Id: @2222
www.repairtw.com

⚠ CAUTION

- Take appropriate and sufficient countermeasures for each when installing systems in the following locations.
  - Locations subject to static electricity or other forms of noise.
  - Locations subject to strong electromagnetic fields and magnetic fields.
  - Locations subject to possible exposure to radioactivity.
  - Locations close to power supplies.

  Failure to observe this caution may result in damage to the product.
- Do not reverse the polarity of the battery when connecting it.

  Failure to observe this caution may damage the battery or cause it to explode.

■ Operation

⚠ CAUTION

上正科技有限公司
購買、維修 此手冊零組件
電話： 037-466333
Email: service@repairtw.com
Line id: @zzzz
www.repairtw.com

- Conduct trial operation on the servomotor alone with the motor shaft disconnected from machine to avoid any unexpected accidents.

  Failure to observe this caution may result in injury.
- Before starting operation with a machine connected, change the settings to match the parameters of the machine.

  Starting operation without matching the proper settings may cause the machine to run out of control or malfunction.
- Forward run prohibited (P-OT) and reverse run prohibited (N-OT) signals are not effective during zero point search mode using parameter Fn003.
- When using the servomotor for a vertical axis, install the safety devices to prevent workpieces to fall off due to occurrence of alarm or overtravel. Set the servomotor so that it will stop in the zero clamp state at occurrence of overtravel.

  Failure to observe this caution may cause workpieces to fall off due to overtravel.
- When not using the normal autotuning, set to the correct moment of inertia ratio.

  Setting to an incorrect moment of inertia ratio may cause vibration.
- Do not touch the SERVOPACK heatsinks, regenerative resistor, or servomotor while power is ON or soon after the power is turned OFF.

  Failure to observe this caution may result in burns due to high temperatures.
- Do not make any extreme adjustments or setting changes of parameters.

  Failure to observe this caution may result in injury due to unstable operation.
- When an alarm occurs, remove the cause, reset the alarm after confirming safety, and then resume operation.

  Failure to observe this caution may result in injury.
- Do not use the servo brake of the servomotor for ordinary braking.

  Failure to observe this caution may result in malfunction.

■ Maintenance and Inspection

⚠ CAUTION

- When replacing the SERVOPACK, resume operation only after transferring the previous SERVOPACK parameters to the new SERVOPACK.
  Failure to observe this caution may result in damage to the product.
- Do not attempt to change wiring while the power is ON.
  Failure to observe this caution may result in electric shock or injury.
- Do not disassemble the servomotor.
  Failure to observe this caution may result in electric shock or injury.

■ Disposal

⚠ CAUTION

- When disposing of the products, treat them as ordinary industrial waste.

上正科技有限公司
購買、維修 此手冊零組件
電話 037-16833
Email: service@repairtw.com
Line Id: @222
www.repairtw.com

■ General Precautions

Note the following to ensure safe application.

- The drawings presented in this manual are sometimes shown without covers or protective guards. Always replace the cover or protective guard as specified first, and then operate the products in accordance with the manual.
- The drawings presented in this manual are typical examples and may not match the product you received.
- This manual is subject to change due to product improvement, specification modification, and manual improvement. When this manual is revised, the manual code is updated and the new manual is published as a next edition.
- If the manual must be ordered due to loss or damage, inform your nearest Yaskawa representative or one of the offices listed on the back of this manual.
- Yaskawa will not take responsibility for the results of unauthorized modifications of this product. Yaskawa shall not be liable for any damages or troubles resulting from unauthorized modification.

CONTENTS

1 Outline

1.1 Checking Products - 1-2

1.1.1 Check Items - 1-2

1.1.2 Servomotors - 1-2

1.1.3 Servo Amplifiers - 1-3

1.2 Product Part Names - 1-3

1.2.1 Servomotors - 1-3

1.3 Model Numbers - 1-4

1.3.1 Standard Servomotors - 1-4

1.3.2 Servo Amplifiers - 1-5

1.4 Examples of Servo System Configurations - - - - - - - - - - - - - - 1-6

1.5 Applicable Standards - 1-10

1.5.1 North American Safety Standards (UL, CSA) - - - - - - - - - - - - - - - - - - 1-10

1.5.2 CE Marking - 1-10

2 System Selection

2.1 Servomotor Model Designations - 2-2

2.1.1 Model SGMAH/SGMPH/SGMSH- 2-2

2.1.2 Model SGMCS - 2-4

2.2 SERVOPACK Model Designations - 2-5

2.3 Σ III Series SERVOPACKs and Applicable Servomotors - - - 2-6

2.4 Selecting Cables - 2-7

2.4.1 Cables for SGMAH and SGMPH Servomotors - - - - - - - - - - - - - - - - - - 2-7

2.4.2 Cables for SGMSH Servomotor- 2-12

2.4.3 Cables for SGMGH Servomotors- 2-16

2.4.4 Cables for SGMCS Servomotor- 2-20

2.5 Selecting Peripheral Devices- 2-23

2.5.1 Special Options - 2-23

2.5.2 Molded-case Circuit Breaker and Fuse Capacity- - - - - - - - - - - - - - - - 2-25

2.5.3 Noise Filters, Magnetic Contactors, Surge Protectors and AC/DC Reactors- 2-26

2.5.4 Regenerative Resistors - 2-27

3 SERVOPACK Specifications and Dimensional Drawings

3.1 SERVOPACK Ratings and Specifications - - - - - - - - - - - - - - - 3-2

3.2 SERVOPACK Installation - 3-5

3.3 SERVOPACK Internal Block Diagrams- - - - - - - - - - - - - - - - - - 3-7

3.3.1 Single-phase 100 V, 50 W to 400 W - 3-7

3.3.2 Single-phase 200 V, 50 W to 400 W - 3-8

上正科技有限公司
購買、維修 此手冊零組件
電話： 037-466333
Email: service@repairtw.com
Line id: @zzzz
www.repairtw.com

3.3.3 Three-phase 200 V, 1.0 kW - 3-9
3.3.4 Single-phase 200 V 800 W - 3-10
3.3.5 Three-phase 200 V, 3.0~5.0kW - 3-11

3.4 SERVOPACK Power Supply Capacities and Power Losses 3-12

3.5 SERVOPACK Overload Characteristics and Load Moment of Inertia - 3-13
3.5.1 Overload Characteristics - 3-13
3.5.2 Starting and Stopping Time - 3-13
3.5.3 Load Moment of Inertia - 3-14

3.6 SERVOPACK Dimensional Drawings - 3-20

3.7 Dimensional Drawings of Base-mounted SERVOPACK Model SGDS-□□□12A / -□□□12A - - - - - - - - - - - - - - - - - - - 3-21
3.7.1 Single-phase 100 V/200 V, 50 W/100 W/200 W - - - - - - - - - - - - - - - - - - 3-21
3.7.2 Single-phase 100 V, 400 W - 3-21
3.7.3 Single-phase 200 V, 400 W - 3-22
3.7.4 Single-phase 200 V, 800 W, Three-phase 200 V, 1.0 kW - 3-22

上正科技有限公司
購買、維修 此手冊零組件
電話： 037-466333
Email: service@repairtw.com
Line id: @ace
www.repairtw.com

4 Specifications and Dimensional Drawings of Cables and Peripheral Devices

4.1 SERVOPACK Main Circuit Wire Size - 4-2

4.2 Connectors for Main Circuit, Control Power Supply, and Servomotor Cable - 4-4
4.2.1 Spring Type (Standard) - 4-4
4.2.2 Crimp Type (Option) - 4-5

4.3 CN1 Cables for I/O Signals - 4-7
4.3.1 Connector Type and Cable Size - 4-7

4.4 Peripheral Devices - 4-8
4.4.1 Digital Operator - 4-8
4.4.2 Cables for Analog Monitor - 4-8
4.4.3 External Regenerative Resistor - 4-9
4.4.4 Absolute Encoder Battery - 4-11
4.4.5 Molded-case Circuit braker (MCCB) - 4-12
4.4.6 Noise Filter - 4-13
4.4.7 Magnetic Contactor - 4-16
4.4.8 Surge Protector - 4-17
4.4.9 AC/DC Reactors for Power Supplied Designed for Minimum Harmonics - 4-18
4.4.10 MECHATROLINK/MECHATROLINK II Communication Cable - - - - - 4-19
4.4.11 MECHATROLINK/MECHATROLINK II Terminator - - - - - - - - - - - - - - 4-19
4.4.12 Cable with Connectors at both ends for Fully-closed Control - - - - - - 4-20
4.4.13 Serial Converter Unit for Fully-closed Control - - - - - - - - - - - - - - - - 4-20

5 Wiring

5.1 Wiring Main Circuit - 5-2
5.1.1 Names and Descriptions of Main Circuit Terminals - - - - - - - - - - - - - - 5-2
5.1.2 Wiring Main Circuit Terminal Block (Spring Type) - - - - - - - - - - - - - - - 5-3
5.1.3 Typical Main Circuit Wiring Examples - 5-4

5.2 Wiring Encoders- 5-7
5.2.1 Connecting an Encoder - 5-7
5.2.2 CN2 Encoder Connector Terminal Layout- 5-8

5.3 I/O Signal Connections - 5-9
5.3.1 Connection Example of I/O Signal - 5-9
5.3.2 I/O Signal Connector (CN1) Terminal Layout - - - - - - - - - - - - - - - - - 5-10
5.3.3 I/O Signal (CN1) Names and Functions - 5-10
5.3.4 Interface Circuit - 5-11

5.4 Wiring MECHATROLINK II Communications- - - - - - - - - - - 5-13
5.4.1 Wiring Example MECHATROLINK II Communications- - - - - - - - - - - 5-13
5.4.2 MECHATROLINK II Communications Connectors (CN6A, CN6B) - - 5-14
5.4.3 Precautions for Wiring MECHATROLINK II Cables - - - - - - - - - - - - - 5-14

5.5 Fully-closed Encoder Connections - - - - - - - - - - - - - - - - - - - 5-16
5.5.1 Connection Example of Linear Scale by Heidenhain - - - - - - - - - - - - 5-16
5.5.2 Connection Example of Linear Scale by Renishaw - - - - - - - - - - - - - 5-17

5.6 Others- 5-18
5.6.1 Wiring Precautions- 5-18
5.6.2 Wiring for Noise Control - 5-19
5.6.3 Using More Than One SERVOPACK - 5-22
5.6.4 400 V Power Supply Voltage - 5-23
5.6.5 AC/DC Reactor for Harmonic Suppression - - - - - - - - - - - - - - - - - - - 5-24

5.7 Connecting Regenerative Resistors - - - - - - - - - - - - - - - - - - 5-25
5.7.1 Regenerative Power and Regenerative Resistance- - - - - - - - - - - - - 5-25
5.7.2 Connecting Externally Regenerative Resistors - - - - - - - - - - - - - - - - 5-25

6 MECHATROLINK II Communications

6.1 Specifications and Configuration - 6-3
6.1.1 Specifications - 6-3
6.1.2 System Configuration - 6-3

6.2 Switches for MECHATROLINK II Communications Settings - 6-4
6.2.1 Communications Settings - 6-4
6.2.2 Setting the Transmission Cycle - 6-4
6.2.3 Setting the Station Address- 6-5

6.3 Main Commands - 6-6
6.3.1 No Operation (NOP: 00H)- 6-6
6.3.2 Read Parameter (PRM_RD: 01H) - 6-7
6.3.3 Write Parameter (PRM_WR: 02H) - 6-8
6.3.4 Read ID (ID_RD: 03H) - 6-9
6.3.5 Set Up Device (CONFIG: 04H) - 6-10
6.3.6 Read Alarm or Warning (ALM_RD: 05H) - 6-11

上正科技有限公司
購買，維修，此手冊零組件
電話： 037-466333
Email: service@repairtw.com
Line Id: @2222
www.repairtw.com

6.3.7 Clear Alarm or Warning (ALM_CLR: 06H) - 6-13
6.3.8 Start Synchronous Communications (SYNC_SET: 0DH) - - - - - - - - - - 6-14
6.3.9 MECHATROLINK II Connection (CONNECT: 0EH) - - - - - - - - - - - - - - 6-15
6.3.10 Disconnection (DISCONNECT: 0FH) - 6-16
6.3.11 Read Non-volatile Parameter (PPRM_RD: 1BH) - - - - - - - - - - - - - - 6-17
6.3.12 Write Non-volatile Parameter (PPRM_WR: 1CH) - - - - - - - - - - - - - - 6-18
6.3.13 Set Coordinates (POS_SET: 20H) - 6-19
6.3.14 Apply Brake (BRK_ON: 21H) - 6-20
6.3.15 Release Brake (BRK_OFF: 22H) - 6-21
6.3.16 Turn Sensor ON (SENS_ON: 23H) - 6-22
6.3.17 Turn Sensor OFF (SENS_OFF: 24H) - 6-23
6.3.18 Stop Motion (HOLD: 25H) - 6-24
6.3.19 Request Latch Mode (LTMOD_ON: 28H) - - - - - - - - - - - - - - - - - - - 6-25
6.3.20 Release Latch Mode (LTMOD_OFF: 29H) - - - - - - - - - - - - - - - - - - - 6-26
6.3.21 Status Monitoring (SMON: 30H) - 6-27
6.3.22 Servo ON (SV_ON: 31H) - 6-28
6.3.23 Servo OFF (SV_OFF: 32H) - 6-29
6.3.24 Interpolation Feed (INTERPOLATE: 34H) - - - - - - - - - - - - - - - - - - - 6-30
6.3.25 Positioning (POSING: 35H) - 6-31
6.3.26 Constant Speed Feed (FEED: 36H) - 6-32
6.3.27 Interpolation Feeding with Position Detection (LATCH: 38H) - - - - - - 6-33
6.3.28 External Input Positioning (EX_POSING: 39H) - - - - - - - - - - - - - - - 6-34
6.3.29 Homing (ZRET: 3AH) - 6-36
6.3.30 Velocity Control (VELCTRL: 3CH) - 6-38
6.3.31 Torque Control (TRQCTRL: 3DH) - 6-39
6.3.32 Adjusting (ADJ: 3EH) - 6-40
6.3.33 General-purpose Servo Control (SVCTRL: 3FH) - - - - - - - - - - - - - - 6-41
6.3.34 MECHATROLINK Connection (CONNECT: 0EH) - - - - - - - - - - - - - - 6-43

6.4 Subcommands - 6-44

6.4.1 No Operation (NOP: 00H) - 6-44
6.4.2 Read Parameter (PRM_RD: 01H) - 6-44
6.4.3 Write Parameter (PRM_WR: 02H) - 6-45
6.4.4 Read Alarm or Warning (ALM_RD: 05H) - 6-45
6.4.5 Read Non-volatile Parameter (PPRM_RD: 1CH) - - - - - - - - - - - - - - 6-46
6.4.6 Write Non-volatile Parameter (PPRM_WR: 1CH) - - - - - - - - - - - - - - 6-46
6.4.7 Request Latch Mode (LTMOD_ON: 28H) - - - - - - - - - - - - - - - - - - - 6-47
6.4.8 Release Latch Mode (LTMOD_OFF: 29H) - - - - - - - - - - - - - - - - - - - 6-47
6.4.9 Status Monitoring (SMON: 30H) - 6-48

6.5 Command Data Field - 6-49

6.5.1 Latch Signal Field Specifications: LT_SGN - - - - - - - - - - - - - - - - - - - 6-49
6.5.2 Option Field Specifications: OPTION - 6-50
6.5.3 Status Field Specifications: STATUS - 6-51
6.5.4 Monitor Selection and Monitor Information Field Specifications:
SEL_MON1/2/3/4, MONITOR1/2/3/4 - 6-52
6.5.5 IO Monitor Field Specifications: IO_MON - 6-53
6.5.6 Substatus Field Specifications: SUBSTATUS - - - - - - - - - - - - - - - - - 6-54

6.6 Command and Response Timing - 6-55

6.6.1 Command Data Execution Timing - 6-55

上川科技有限公司
購買、維修、技術諮詢
電話：037-466333
Email：service@repairtw.com
www.repairtw.com

6.6.2 Monitor Data Input Timing - 6-55

6.7 Operation Sequence - 6-56

6.7.1 Operation Sequence for Managing Parameters Using a Controller - - 6-56

6.7.2 Operation Sequence for Managing Parameters Using SERVOPACK - 6-57

6.7.3 Operation Sequence When Being Servo ON - - - - - - - - - - - - - - - - - 6-58

6.7.4 Operation Sequence When OT (Overtravel Limit Switch) Signal Is Input6-58

6.7.5 Operation Sequence At Emergency Stop (Main Circuit OFF) - - - - - - 6-58

7 Operation

7.1 Outline - 7-2

7.1.1 Before Reading This Chapter - 7-2

7.1.2 Parameter Configurations - 7-2

7.1.3 Digits with Allocated Functions in Parameter - - - - - - - - - - - - - - - - - - 7-3

7.2 Trial Operation - 7-4

7.2.1 Check Items before Trial Operation - 7-4

7.2.2 Trial Operation for MECHATROLINK II Communications - - - - - - - - - - 7-4

7.2.3 Trial Operation Inspection - 7-5

7.2.4 Supplementary Information on Trial Operation - - - - - - - - - - - - - - - - - 7-6

7.3 Settings According to Machine Characteristics - - - - - - - - - - 7-8

7.3.1 Switching Servomotor Rotation Direction - 7-8

7.3.2 Setting the Overtravel Limit Function - 7-8

7.3.3 Software Limit Settings - 7-11

7.4 Settings According to Host Controller - - - - - - - - - - - - - - - - 7-13

7.4.1 Sequence I/O Signals - 7-13

7.4.2 Using the Electronic Gear Function - 7-14

7.4.3 Acceleration/Deceleration Function - 7-18

7.4.4 Motion Settings - 7-21

7.5 Setting Up the SERVOPACK - 7-23

7.5.1 Parameters - 7-23

7.5.2 Input Circuit Signal Allocation - 7-23

7.5.3 Output Circuit Signal Allocation - 7-26

7.5.4 Debug Function - 7-28

7.5.5 Monitoring - 7-28

7.6 Setting Stop Functions - 7-29

7.6.1 Using the Dynamic Brake - 7-29

7.6.2 Using the Holding Brake - 7-30

7.7 Absolute Encoders - 7-33

7.7.1 Selecting an Absolute Encoder - 7-33

7.7.2 Absolute Encoder Setup - 7-33

7.7.3 Multi-turn Limit Setting - 7-35

7.7.4 Absolute Encoder Home Position Offset - 7-37

FIT科技有限公司
購買、維修、此手冊零組件
電話：037-466393
Email: service@repair-tw.com
Line ID: @1222
www.repairtw.com

8 Adjustments

8.1 Autotuning - 8-3
8.1.1 Servo Gain Adjustment Methods - 8-3
8.1.2 List of Servo Adjustment Functions - 8-4

8.2 Normal Autotuning - 8-7
8.2.1 Normal Autotuning - 8-7
8.2.2 Normal Autotuning Procedure - 8-8
8.2.3 Selecting the Normal Autotuning Execution Method - - - - - - - - - - - - - - - 8-9
8.2.4 Machine Rigidity Setting for Normal Autotuning - - - - - - - - - - - - - - - - 8-10
8.2.5 Method for Changing the Machine Rigidity Setting - - - - - - - - - - - - - - 8-11
8.2.6 Saving the Results of Normal Autotuning - 8-12
8.2.7 Procedure for Saving the Results of Normal Autotuning - - - - - - - - - - 8-12

8.3 Advanced Autotuning - 8-13
8.3.1 Advanced Autotuning - 8-13
8.3.2 Advanced Autotuning Procedure - 8-15

8.4 One-parameter Autotuning - 8-18
8.4.1 One-parameter Autotuning - 8-18
8.4.2 One-parameter Autotuning Procedure - 8-18

8.5 Manual Tuning - 8-20
8.5.1 Explanation of Servo Gain - 8-20
8.5.2 Servo Gain Manual Tuning - 8-20
8.5.3 Position Loop Gain - 8-21
8.5.4 Speed Loop Gain - 8-22
8.5.5 Speed Loop Integral Time Constant - 8-22

8.6 Servo Gain Adjustment Functions - 8-23
8.6.1 Feed Forward Reference - 8-23
8.6.2 Using the Mode Switch (P/PI Switching) - 8-24
8.6.3 Setting the Speed Bias - 8-28
8.6.4 Speed Feedback Filter Time Constant - 8-28
8.6.5 Speed Feedback Compensation - 8-28
8.6.6 Switching Gain Settings - 8-30
8.6.7 Predictive Control - 8-35
8.6.8 Less Deviation Control - 8-40
8.6.9 Torque Reference Filter - 8-46
8.6.10 Vibration Suppression on Stopping - 8-48
8.6.11 Backlash Compensation - 8-49
8.6.12 Position Integral - 8-49

8.7 Analog Monitor - 8-50

9 Fully-closed Control

9.1 System Configuration for SERVOPACK with Fully-closed Control - 9-2

9.2 Serial Converter Unit - 9-3
9.2.1 Specifications - 9-3
9.2.2 Analog Signal Input Timing - 9-4

上正科技有限公司
購買、維修、此手冊零組件
電話： 037-466333
Email: service@repairtw.com
Line id: @zzz
www.repairtw.com

9.2.3 Connection Example of Linear Scale by Heidenhain - - - - - - - - - - - - - 9-5
9.2.4 Connection Example of Linear Scale by Renishaw - - - - - - - - - - - - - - 9-6
9.2.5 Connection Cable between SERVOPACK and Serial Converter Unit - 9-7

9.3 Internal Configuration of Fully-closed Control - - - - - - - - - - - 9-8

9.4 Related Parameters - 9-9

10 Inspection, Maintenance, and Troubleshooting

10.1 Troubleshooting - 10-2
10.1.1 Status Display on Panel Operator - 10-2
10.1.2 Alarm Display Table - 10-3
10.1.3 Warning Displays - 10-6
10.1.4 Troubleshooting of Alarm and Warning- 10-7
10.1.5 Troubleshooting for Malfunction without Alarm Display - - - - - - - - 10-20

10.2 Inspection and Maintenance - 10-24
10.2.1 Servomotor Inspection - 10-24
10.2.2 SERVOPACK Inspection- 10-24
10.2.3 SERVOPACK's Parts Replacement Schedule- - - - - - - - - - - - - - - 10-25

11 Appendix

11.1 Servomotor Capacity Selection Examples- - - - - - - - - - - - 11-2
11.1.1 Selection Example for Speed Control - 11-2
11.1.2 Selection Example for Position Control- 11-4
11.1.3 Calculating the Required Capacity of Regenerative Resistors- - - - - 11-6

11.2 List of Parameters - 11-11
11.2.1 Utility Functions List - 11-11
11.2.2 List of Parameters - 11-12
11.2.3 Monitor Modes - 11-37

11.3 Using the Adjusting Command (ADJ: 3EH) - - - - - - - - - - 11-38
11.3.1 Autotuning - 11-38
11.3.2 Absolute Encoder Setup (Initialization) - - - - - - - - - - - - - - - - - - - 11-43
11.3.3 Multi-turn Limit Setting - 11-44
11.3.4 Automatic Offset Adjustment of Motor Current Detection Signals - 11-45

11.4 Parameter Recording Table - 11-46

Index Index–1

上正科技有限公司
購買、維修 此手冊零組件
電話： 037-466333
Email: service@repairtw.com
Line id: @zzzz
www.repairtw.com

上正科技有限公司
購買、維修 此手冊零組件
電話： 037-466333
Email: service@repairtw.com
Line id: @zzzz
www.repairtw.com

1

Outline

1.1 Checking Products - 1-2

1.1.1 Check Items - 1-2

1.1.2 Servomotors - 1-2

1.1.3 Servo Amplifiers - 1-3

1.2 Product Part Names - 1-3

1.2.1 Servomotors - 1-3

1.3.2 Servo Amplifiers - 1-5

1.4 Examples of Servo System Configurations - - - - - - - - - - - - - - 1-6

1.5 Applicable Standards - 1-10

1.5.1 North American Safety Standards (UL, CSA) - - - - - - - - - - - - - - - - - 1-10

1.5.2 CE Marking - 1-10

上正科技有限公司
購買、維修 此手冊零組件
電話：037-466333
Email: service@repairtw.com
www.repairtw.com

1.1 Checking Products

1.1.1 Check Items

Check the following items when Σ-III Series products are delivered.

Check Items	Comments
Are the delivered products the ones that were ordered?	Check the model numbers marked on the nameplates on the servomotor and SERVOPACK. (Refer to the descriptions of model numbers in the following section.)
Does the servomotor shaft rotate smoothly?	The servomotor shaft is normal if it can be turned smoothly by hand. Servomotors with brakes, however, cannot be turned manually.
Is there any damage?	Check the overall appearance, and check for damage or scratches that may have occurred during shipping.

If any of the above items are faulty or incorrect, contact your Yaskawa representative or the dealer from whom you purchased the products.

1.1.2 Servomotors

(1) External Appearance and Nameplate Example

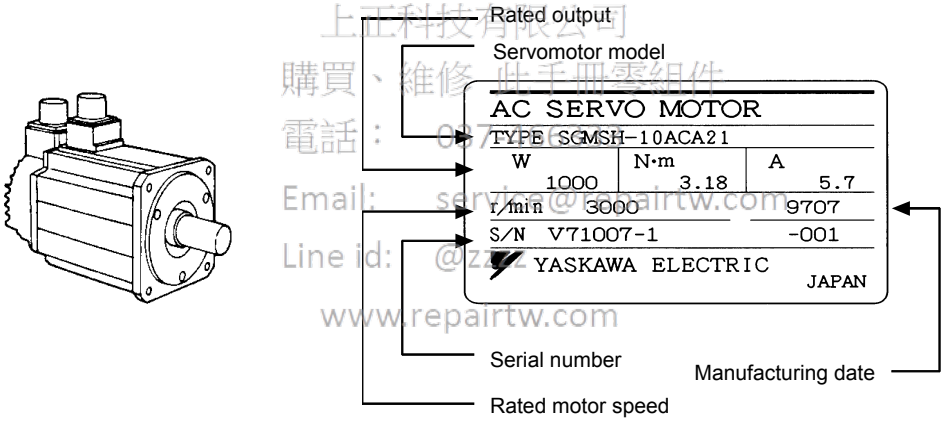

上正科技有限公司
購買、維修 此手冊零組件
電話： 037462622
Email: service@repairtw.com
Line id: @zz22
www.repairtw.com

(2) Type SGMCS

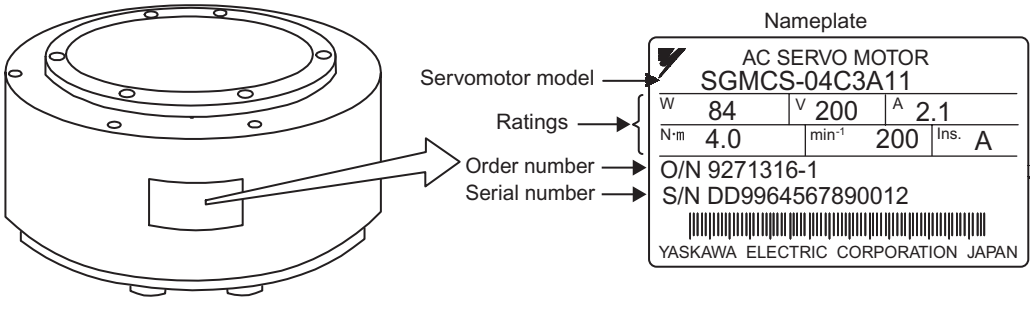

1.1.3 Servo Amplifiers

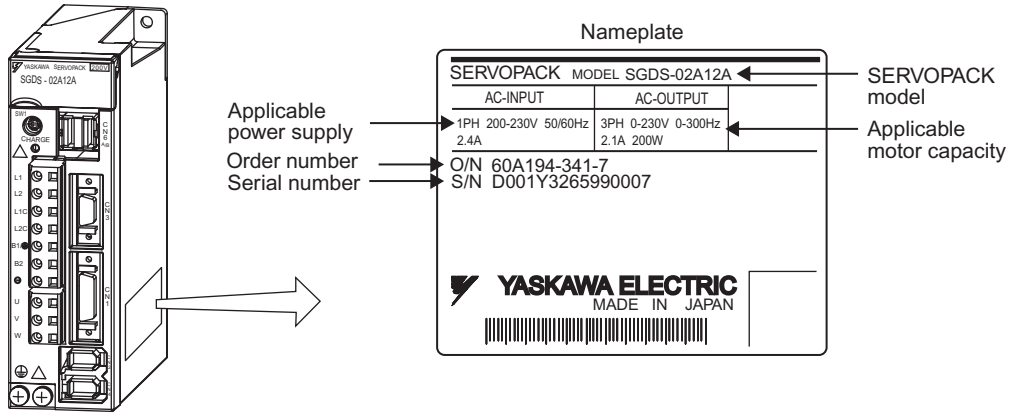

1.2 Product Part Names

1.2.1 Servomotors

(1) The figure below shows part names for servomotors with or without brakes.

上正科技有限公司
購買、維修 此手冊零組件
電話: 037-466333
Email: service@repairtw.com
Line id: @zzzz
www.repairtw.com

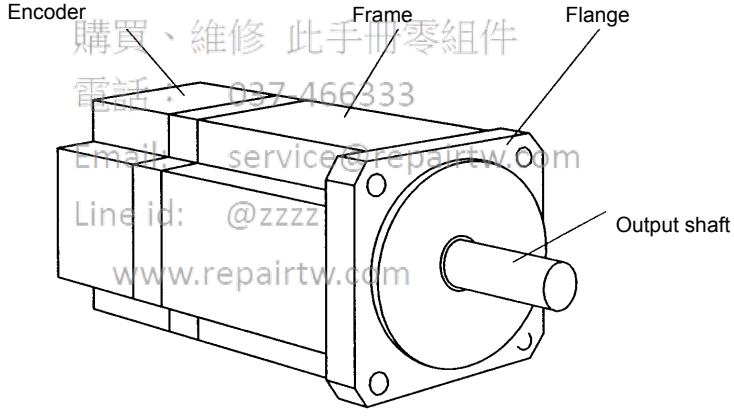

(2) Type SGMCS Direct-drive

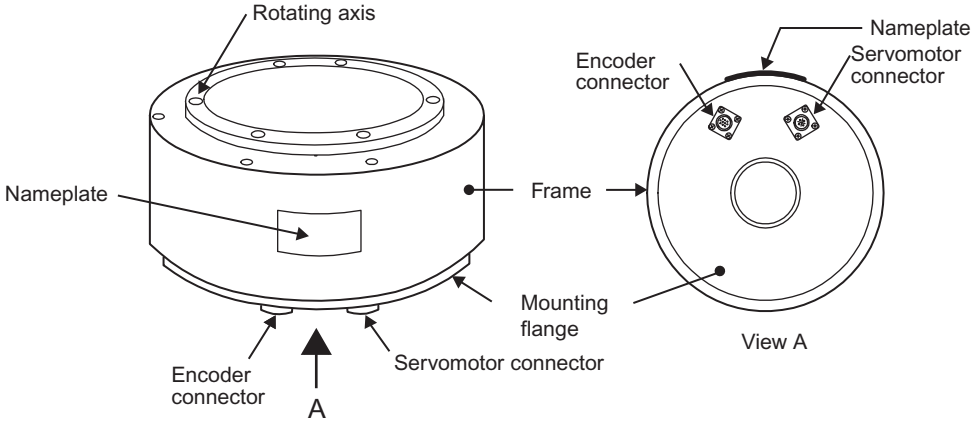

1.3 Model Numbers

1.3.1 Standard Servomotors

SGMPH - 01 A A A 2 S

Sigma II Series Servomotor Name
SGMAH
SGMPH
SGMGH
SGMSH
SGMUH
SGMBH

Servomotor Capacity (See Table 1.1)

Power Supply
A: 200V
B: 100V*
D: 400V

*The only 100V servomotors are the 0.2kW or less SGMAH and SGMPH models.

Serial Encoder Specifications (See Table 1.2)

Brake and Oil Seal Specifications
1: Standard
S: With oil seal
C: With $24V_{DC}$ brake
E: S + C
For AvailableSGMBH: See Catalog for options

Shaft End Specifications
(See Table 1.3)

Design Revision Order
A SGMAH
SGMPH
SGMGH (1500rpm)
SGMSH
SGMUH
E: SGMPH (IP67 waterproof specification)
SGMBH : A = 200% Peak Torque
B = 250% Peak Torque

上正科技有限公司
購買、維修、出售、出租專業服務
電話：037-466333
Email: service@repairtw.com
Line id: @zzz
www.repairtw.com

Table 1.1: Servomotor Capacity (kW)

Symbol	SGMAH 3000rpm	SGMPH 3000rpm	SGMGH 1500rpm	SGMSH 3000rpm	SGMUH 6000rpm	SGBMH 1500rpm	Symbol	SGMAH 3000rpm	SGMPH 3000rpm	SGMGH 1500rpm	SGMSH 3000rpm	SGMUH 6000rpm	SGMBH 1500rpm
A3	0.03	—	—	—	—	—	40	—	—	—	4.0	4.0	—
A5	0.05	—	—	—	—	—	44	—	—	4.4	—	—	—
01	0.1	0.1	—	—	—	—	50	—	—	—	5.0	—	—
02	0.2	0.2	—	—	—	—	55	—	—	5.5	—	—	—
04	0.4	0.4	—	—	—	—	75	—	—	7.5	—	—	—
05	—	—	0.45	—	—	—	1A	—	—	11	—	—	—
08	0.75	0.75	—	—	—	—	1E	—	—	15	—	—	—
09	—	—	0.85	—	—	—	2B	—	—	—	—	—	22
10	—	—	—	1.0	1.0	—	3Z	—	—	—	—	—	30
13	—	—	1.3	—	—	—	3G	—	—	—	—	—	37
15	—	1.5	—	1.5	1.5	—	4E	—	—	—	—	—	45
20	—	—	1.8	2.0	—	—	5E	—	—	—	—	—	55
30	—	—	2.9	3.0	3.0	—							

Table 1.2: Serial Encoders

Code	Specification	SGMAH	SGMPH	SGMGH	SGMSH	SGMUH
1	16-bit absolute encoder	Standard	Standard	—	—	—
2	17-bit absolute encoder	—	—	Standard	Standard	Standard
A	13-bit incremental encoder	Standard	Standard	—	—	—
B	16-bit incremental encoder	Optional	Optional	—	—	—
C	17-bit incremental encoder	—	—	Standard	Standard	Standard

Table 1.3: Shaft End Specifications (Straight)

Code	Specification	SGMAH	SGMPH	SGMGH	SGMSH	SGMUH	SGMBH
2	Straight without key	Optional	Optional	Optional	Optional	Optional	—
4	Straight with key	Standard	Standard	—	—	—	Standard
6	Straight with key and tap	Optional	Optional	Standard	Standard	Standard	Optional
8	Straight with tap	Optional	Optional	Optional	—	—	—
K	Straight without key, foot mounted	—	—	—	—	—	Optional
L	Straight with key & tap, foot mounted	—	—	—	—	—	Optional (55kW Standard)

1.3.2 Servo Amplifiers

With the front cover open

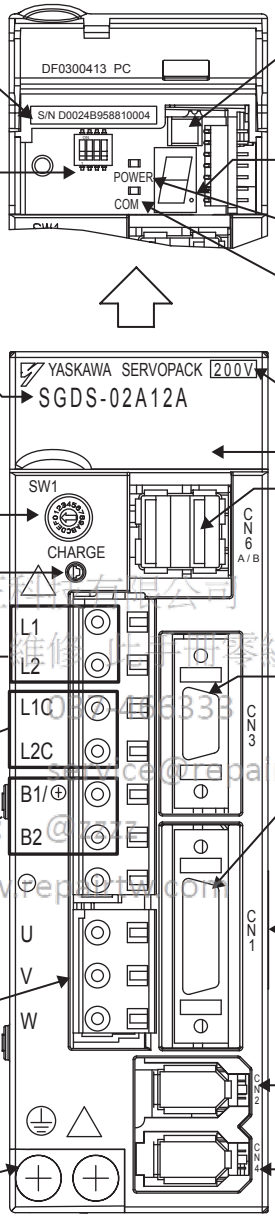

Serial number

Dip switch (SW2)
Used to set MECHATROLINK-II communications.
Refer to *6.2 Switches for MECHATROLINK-II Communications Settings.*

SERVOPACK model
Refer to *2.2 SERVOPACK Model Designations.*

Rotary switch (SW1)
Used to set the MECHATROLINK-II station address.
Refer to *6.2 Switches for MECHATROLINK-II Communications Settings.*

Charge indicator
Lights when the main circuit power supply is ON and stays lit as long as the main circuit power supply capacitor remains charged. Therefore, do not touch the SERVOPACK even after the power supply is turned OFF if the indicator is lit.

Main circuit power supply terminals
Used for main circuit power supply input.
Refer to *5.1 Main Circuit Wiring.*

Control power supply Terminals
Used for control power supply input.
Refer to *5.1 Main Circuit Wiring.*

Regenerative resistor connecting terminals
Used to connect external regenerative resistors.
Refer to *5.7 Connecting Regenerative Resistors.*

Servomotor terminals
Connects to the servomotor power line.
Refer to *5.1 Main Circuit Wiring.*

Ground terminal
Be sure to connect to protect against electrical shock.
Refer to *5.1 Main Circuit Wiring.*

CN5 Analog monitor connector
Used to monitor motor speed, torque reference, and other values through a special cable.
Refer to *4.4.2 Cables for Analog Monitor* or *8.7 Analog Monitor.*

Panel display
Indicates the servo status with 7-segment LEDs.
Refer to *10.1.1 Status Display on Panel Operator.*

LED（POWER）
Indicates that the control power is being supplied.
Refer to *10.1.1 Status Display on Panel Operator.*

LED（COM）
Indicates that data is being transmitted between the SERVOPACK and the MECHATROLINK-II system.
Refer to *10.1.1 Status Display on Panel Operator.*

Input voltage

Front cover

MECHATROLINK-II Communications connectors（CN6A，CN6B）
Connects MECHATROLINK-II - supported devices.
Refer to *5.4.2 MECHATROLINK-II Communications Connectors.(CN6A, CN6B)*

CN3 Connector for personal computer monitoring
Used to communicate with a personal computer or to connect a digital operator.
Refer to *4.4.1 Digital Operator.*

CN1 I/O signal connector
Used for reference input signals and sequence I/O signals.
Refer to *5.3 Examples of I/O Signal Connection.*

Nameplate (side view)
Indicates the SERVOPACK model and ratings.
Refer to *1.1.3 Nameplate.*

CN2 Encoder connector
Connects to the encoder in the SERVOPACK.
Refer to *5.2 Wiring Encoders.*

CN4 Fully-closed connector
Used to execute the fully-closed control by scales attached outside the SERVOPACK.
Refer to *9.1 System Configuration for SERVOPACK with Fully - closed Control.*

上正科技有限公司
購買、維修、出售零組件
電話：03-4816333
Email: service@reda.rtw.com
Line id: @2337
www.reparts.com

INFO

■ Connecting terminal

For connecting a reactor, refer to *4.4.9 AC/DC Reactors for Power Supplied Designed for Minimum Harmonics*.

1.4 Examples of Servo System Configurations

This section describes examples of basic servo system configuration.

(1) Connecting to SGMAH and SGMPH Servomotors

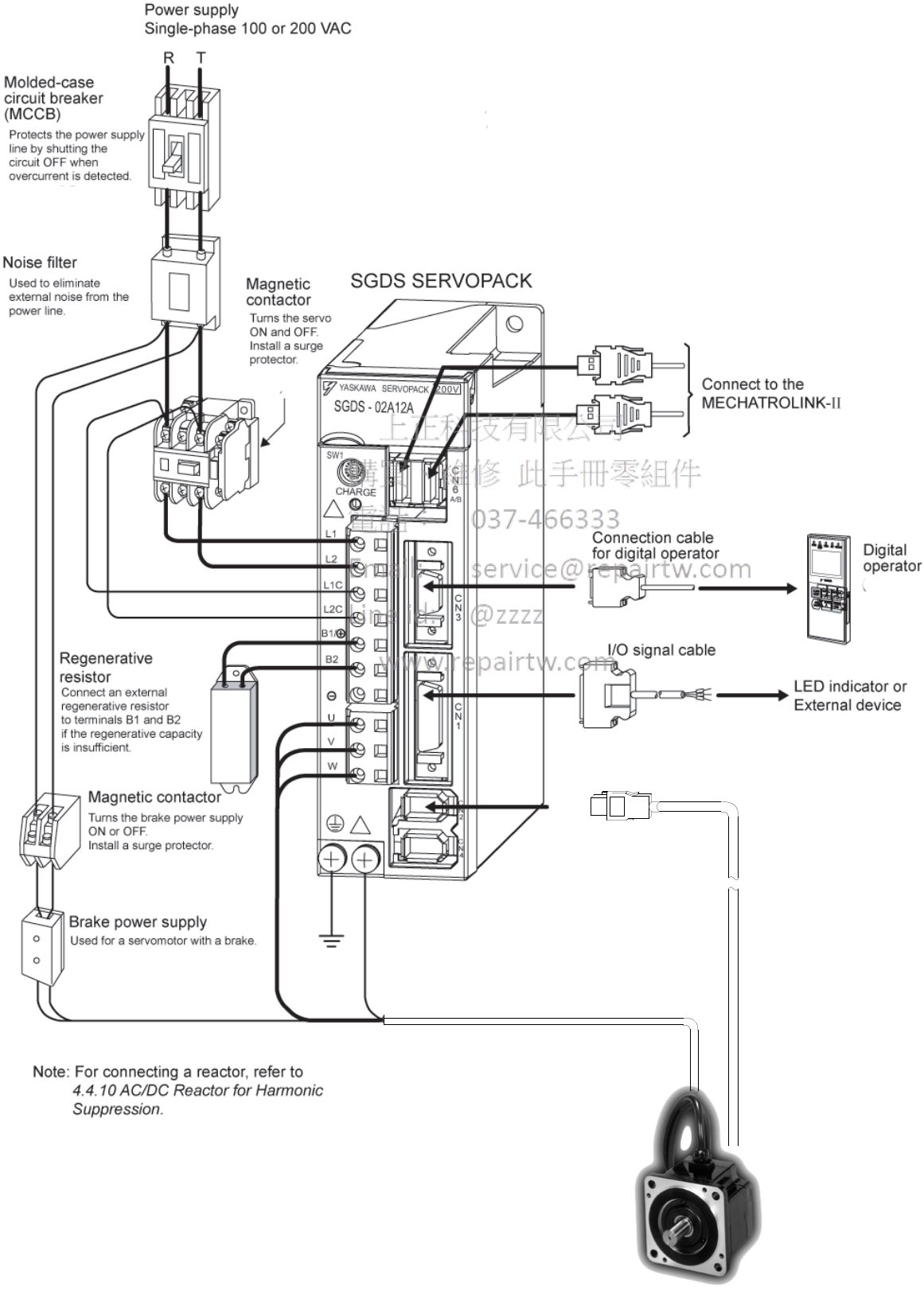

Note: For connecting a reactor, refer to *4.4.10 AC/DC Reactor for Harmonic Suppression.*

上正科技有限公司
請到 檢修 此手冊零組件
037-466333
service@repairtw.com
@zzzz
www.repairtw.com

Connect the main circuit cable and encoder cable to SGMAH or SGMPH servomotor in the following manner.

IMPORTANT

Do not directly touch the connector pins provided with the servomotor. Particularly, the encoder may be damaged by static electricity, etc.

1. Remove the protective tape and cap from the servomotor connector.

2. Mount the cable connector on the servomotor and fix it with screws as shown in the figure below.

上正科技有限公司
購買、維修 此手冊零組件
電話： 037-466333
Email: service@repairtw.com
Line id: @zzzz
www.repairtw.com

(2) Connecting to SGMSH, SGMGH Servomotors

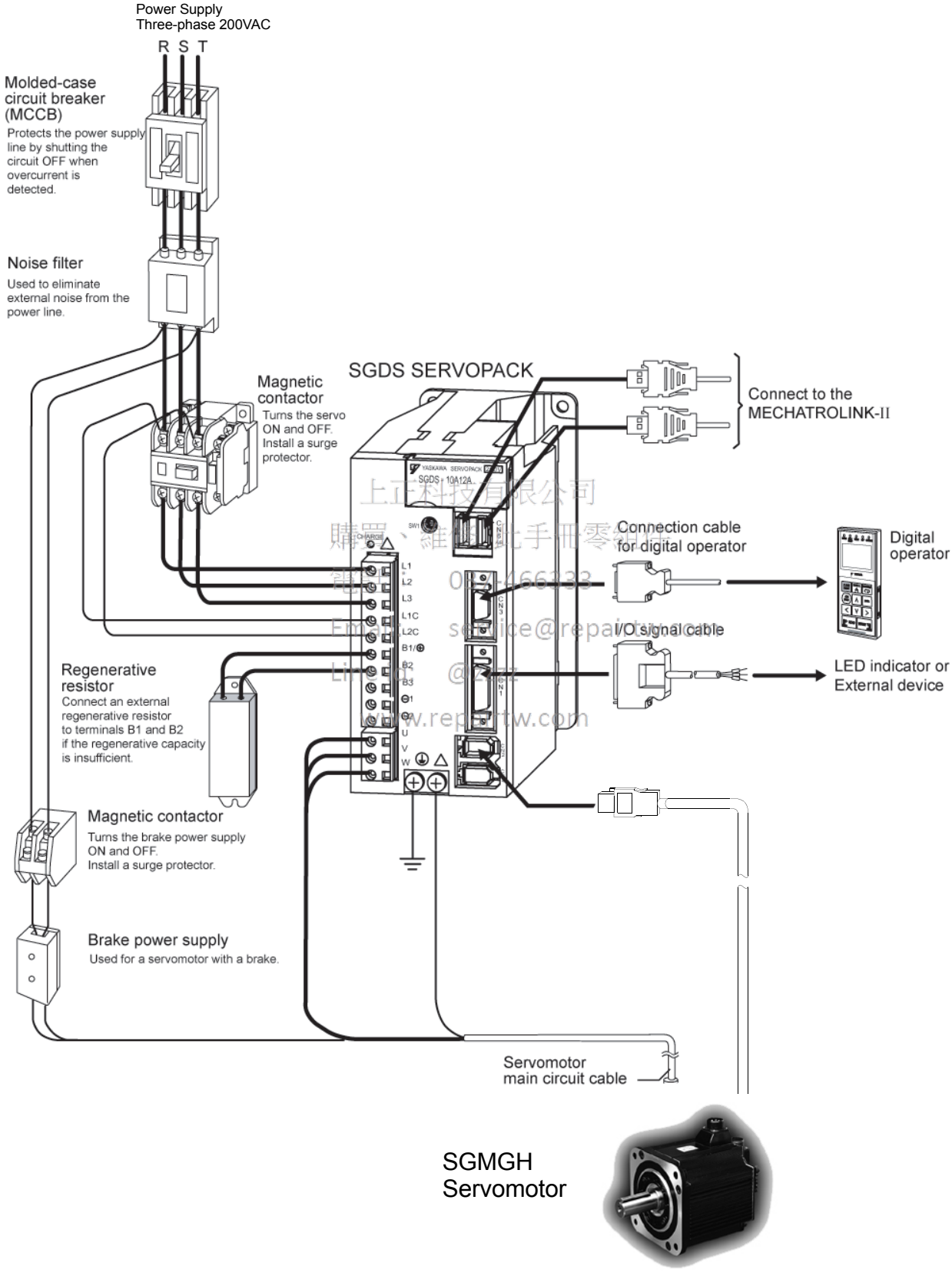

上正科技有限公司
購買、維修電子零組件
電話: 07-2466233
Email: service@repair.tw.com
Line id: @rtzz
www.repair.tw.com

(3) Connecting to SGMCS Servomotor

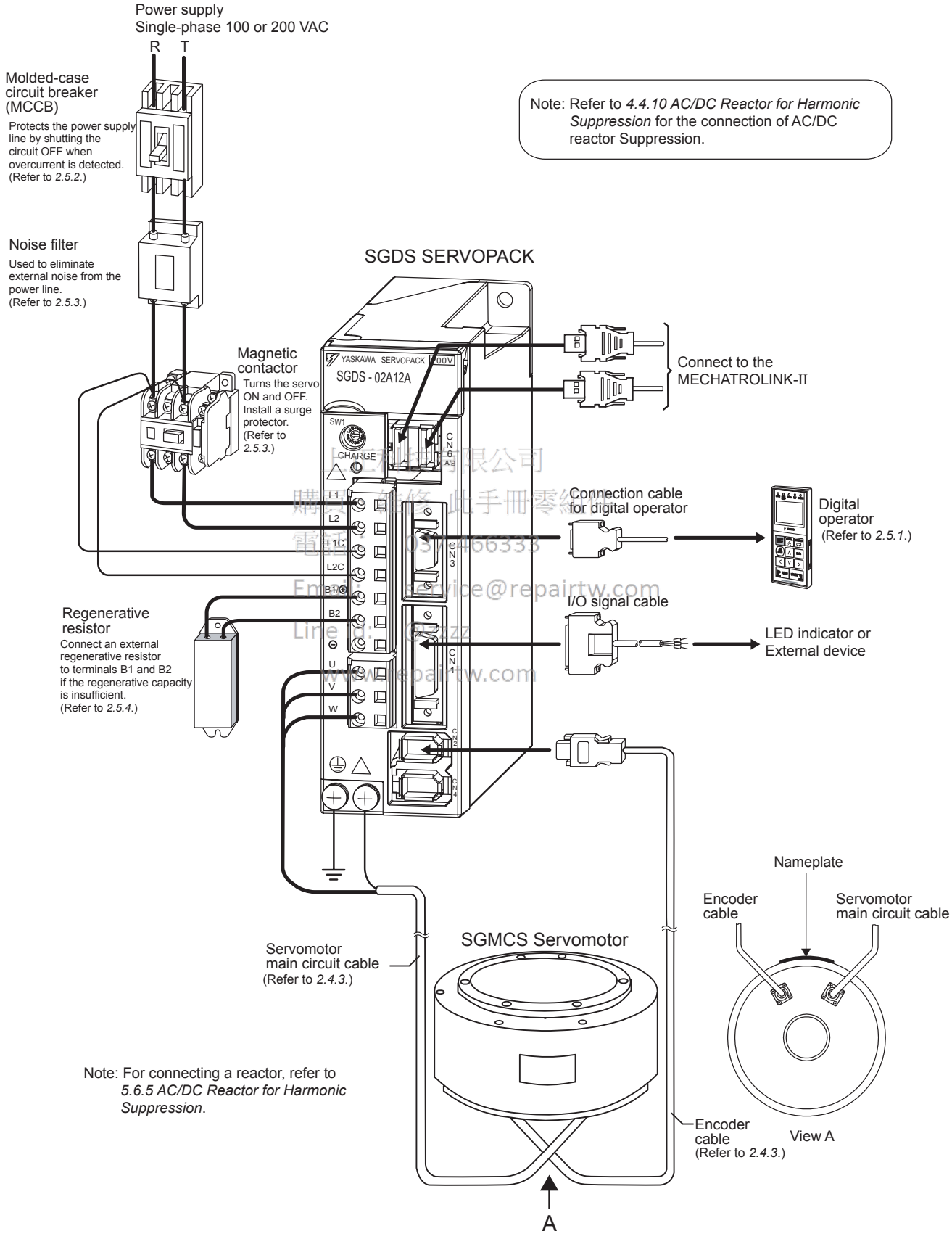

Email: service@repairtw.com
www.repairtw.com

1.5 Applicable Standards

1.5.1 North American Safety Standards (UL, CSA)

Model		UL*1 Standards (UL File No.)	CSA*2 Standards	Certifications
SERVOPACK	• SGDS-□□A12A	UL508C (E147823)	CSA C22.2 No.14	UL
Servomotor	• SGMAH • SGMPH • SGMSH • SGMCS-□□B,C,D,E (Available June 2003.)	UL1004 (E165827)	CSA C22.2 No.100	

* 1. Underwriters Laboratories Inc.
* 2. Canadian Standards Association.

上正科技有限公司
購買 維修 此手冊零組件
電話： 037-466333
Email: service@repairtw.com
Line id: @zzzz
www.repairtw.com

1.5.2 CE Marking

Model		Low Voltage Directive	EMC Directive		Certifications
			EMI	EMS	
SERVOPACK	• SGDS-□□A12A	EN50178	EN55011 class A group 1	EN61000-6-2	TÜV PS*
Servomotor	• SGMAH • SGMPH • SGMSH • SGMCS-□□M,N (Available Spetember 2003)	IEC60034-1 IEC60034-5 IEC60034-8 IEC60034-9			

* TÜV Product Services GmbH
Note: Because SERVOPACKs and servomotors are built-in type, reconfirmation is required after being installed in the final product.

2

System Selection

2.1 Servomotor Model Designations - 2-2
2.1.1 Model SGMAH/SGMPH/SGMSH - 2-2
2.1.2 Model SGMCS - 2-4
2.2 SERVOPACK Model Designations - 2-5
2.3 Σ III Series SERVOPACKs and Applicable Servomotors - - - - 2-6
2.4 Selecting Cables - 2-7
2.4.1 Cables for SGMAH and SGMPH Servomotors - - - - - - - - - - - - - - - - - - 2-7
2.4.2 Cables for SGMSH Servomotor - 2-12
2.4.3 Cables for SGMGH Servomotors - 2-16
2.4.4 Cables for SGMCS Servomotor - 2-20
2.5 Selecting Peripheral Devices - 2-23
2.5.1 Special Options - 2-23
2.5.2 Molded-case Circuit Breaker and Fuse Capacity - - - - - - - - - - - - - - - 2-25
2.5.3 Noise Filters, Magnetic Contactors, Surge Protectors
and AC/DC Reactors - 2-22
2.5.4 Regenerative Resistors - 2-27

上正科技有限公司
購買、維修 此手冊零組件
電話： 037-466333
Email: service@repairtw.com
Line Id: @3333
www.repairtw.com

2.1 Servomotor Model Designations

This section explains how to check the servomotor model and ratings. The alphanumeric codes after SGM□S indicate the specifications.

2.1.1 Model SGMAH/SGMPH/SGMSH

(1) Without Gears

SGMAH - 01 A A F 4 1

Sigma II Servomotor Type

Rated Output
- A3: 30W (0.04hp)
- A5: 50W (0.07hp)
- 01: 100W (0.13hp)
- 02: 200W (0.25hp)
- 04: 400W (0.5hp)
- 08: 750W (1hp)

Power Supply
- A: Std.

Accessories
- 1: Standard
- C: Standard with $24V_{DC}$ Brake*
- S: Standard with Shaft Seal*
- E: Standard with Brake & Shaft Seal*

Shaft Specifications
- 4: Straight Shaft with Keyway*
- 2: Straight Shaft without Keyway

Revision Level
- F: Standard
- N: NEMA flange (200W, 400W & 800W only without holding brake)

Encoder Specifications
- A: 13-bit (2048 x 4) Incremental Encoder
- 1: 16-bit (16384 x 4) Absolute Encoder

上正科技有限公司
購買、維修 此手冊零組件
電話： 037-466333
Email: service@repairtw.com
Line id: @zzzz
http://www.repairtw.com

* Keyways, shaft seals, and holding brakes not available on motors with NEMA flanges (revision level = N).

SGMPH - 01 A A E 4 1D

Sigma II Servomotor Type

Rated Output	
01:	100W (0.13hp)
02:	200W (0.25hp)
04:	400W (0.5hp)
08:	750W (1hp)
15:	1.5kW (2hp)

Power Supply
- A: Standard

Accessories	
1D:	Standard
CD:	Standard with $24V_{DC}$ Holding Brake
SD:	Standard with Shaft Seal
ED:	Standard with Brake & Shaft Seal

Shaft Specifications
- 4: Straight Shaft with Keyway

Revision Level

Encoder Specifications	
A:	13-Bit (2048 x 4) Incremental Encoder
1:	16-Bit (16,384 x 4) Absolute Encoder

SGMSH - 10 A C A 6 1

Sigma II Servomotor Type

Rated Output	
10:	1.0kW (1.3hp)
15:	1.5kW (2.0hp)
20:	2.0kW (2.7hp)
30:	3.0kW (4.0hp)
40:	4.0kW (5.4hp)
50:	5.0kW (6.7hp)

Power Supply
- A: 200V

Accessories	
1:	Standard
C:	$24V_{DC}$ Brake
S:	Shaft Seal
E:	Shaft Seal and Brake

Shaft Specifications
- 6: Straight Shaft with Keyway

Rated Speed
- A: 3000rpm

Encoder Specifications
- C: 17-bit Incremental

SGMGH - 09 A C A 6 C

Sigma Servomotor Type

Rated Output
- 05: 500W (0.7hp)
- 09: 850W (1.14hp)
- 13: 1.3kW (1.7hp)
- 20: 2.0kW (2.7hp)
- 30: 3.0kW (4.0hp)
- 44: 4.4kW (6.0hp)
- 55: 5.5kW (7.5hp)
- 75: 7.5kW (10hp)

Power Supply
- A: 200V

Accessories
- 1: Standard
- C: $24V_{DC}$ Brake
- S: Shaft Seal
- E: Brake and Shaft Seal

Shaft Specifications
- 6: Straight Shaft with Keyway

Rated Speed
- A: 1500rpm

Encoder Specifications
- C: 17-Bit Incremental Encoder
- 2: 17-Bit Absolute Encoder

上正科技有限公司
購買、維修 此手冊零組件
電話： 037-466333
Email: service@repairtw.com
Line id: @zzzz
www.repairtw.com

2.1.2 Model SGMCS

SGMCS－02 B 3 A 1 1

Σ–II Series SGMCS servomotor

Rated Torque (N·m)		Motor Outer Diameter (mm)			
Code	Specifications	B（φ135）	C（φ175）	D（φ230）	E（φ290）
02	2.0	○			
04	4.0		○		
05	5.0	○			
07	7.0	○			
08	8.0			○	
10	10.0		○		
14	14.0		○		
16	16.0				○
17	17.0			○	
25	25.0			○	
35	35.0				○

Options	
Code	Specifications
1	Standard

Flange Specifications		
Code	Specifications	Remarks
1	Face mounted type	Standard

Design Revision Order	
Code	Specifications
A	Standard

上正科技有限公司
購買、維修 此手冊零組件
電話： 037-466333
Email: service@repairtw.com
Line id: @zzzz
www.repairtw.com

Serial Encoder Specifications		
Code	Specifications	Remarks
3	20-bit absolute (without multi-turn data)	Standard
D	20-bit incremental	Option

Note: The number of encoder pulses is 262144 P/Rev.

2.2 SERVOPACK Model Designations

Select the SERVOPACK according to the applied servomotor.

SGDS - 02 A 12 A

Σ-III Series SGDS SERVOPACK

Rated Output of Applicable Servomotor	
Code	Rated Output
A5	50W
01	100W
02	200W
04	400W
05	500W
08	750W
10	1.0kW
15	1.5kW
20	2.0kW
30	3.0kW

Design Revision Order
A,B ••• Start from A

Interface Specifications	
Code	Specifications
12	MECHATROLINK-II IF+ Serial fully-closed Interface

Supply Voltage	
Code	Voltage
A	200 V
F	100 V (100 V input, 200 V output: Doubled voltage)

上正科技有限公司
購買、維修 此手冊零組件
電話： 037-466333
Email: service@repairtw.com
Line id: @rzz
www.repairtw.com

Note: All SGDS amplifiers require 200V motors.

2.3 Σ III Series SERVOPACKs and Applicable Servomotors

Table 2.1 SERVOPACKs and Applicable Servomotors

Servomotor Type		Σ III Series SGDS SERVOPACK		
		Single-phase 100 VAC	Single-phase 200 VAC	Three-phase 200 VAC
SGMAH (Super High Power Capacity) 3000RPM 7 models	A5A (50 W)	A5F	A5A	–
	01A (100 W)	01F	01A	–
	ϕ2A (150 W)	02F	02A	–
	02A (200 W)	02F	02A	–
	04A (400 W)	04F	04A	–
	08A (750 W)	–	08A	–
SGMPH (Flat Type) 3000RPM 4 models	01A (100 W)	01F	01A	–
	02A (200 W)	02F	02A	–
	04A (400 W)	04F	04A	–
	08A (750 W)	–	08A	–
SGMSH (Super High Power Capacity) 3000RPM 1 model	10A (1.0 kW)	–	–	10A
	15A (1.5 kW)	–	–	15A
	20A (2.0 kW)	–	–	20A
	30A (3.0 kW)	–	–	30A
SGMGH (General-purpose)	05A (0.45kW)	–	–	05A
	09A (0.85kW)	–	–	10A
	13A (1.3kW)	–	–	15A
	20A (1.8kW)	–	–	20A
	30A (2.2kW)	–	–	30A
SGMCS (Direct Drive) 200RPM 9 models (excluding 20D and 35E) 150 RPM 2 models (25D and 35E)	02B (42 W)	02F	02A	–
	05B (105 W)	02F	02A	–
	07B (147 W)	02F	02A	–
	04C (84 W)	04F	04A	–
	08C (168 W)	04F	04A	–
	10C (209 W)	04F	04A	–
	14C (293 W)	04F	04A	–
	17D (356 W)	04F	04A	–
	25D (393 W)	04F	04A	–
	16E (335 W)	–	08A	–
	35E (550 W)	–	08A	–

Note: Models with gears are available (excluding SGMCS).

上恒科技有限公司
購買、維修 此手冊零組件
電話：037-466333
service@repairtw.com
Line id: @zzzz
www.repairtw.com

2.4 Selecting Cables

2.4.1 Cables for SGMAH and SGMPH Servomotors

- Standard Connection

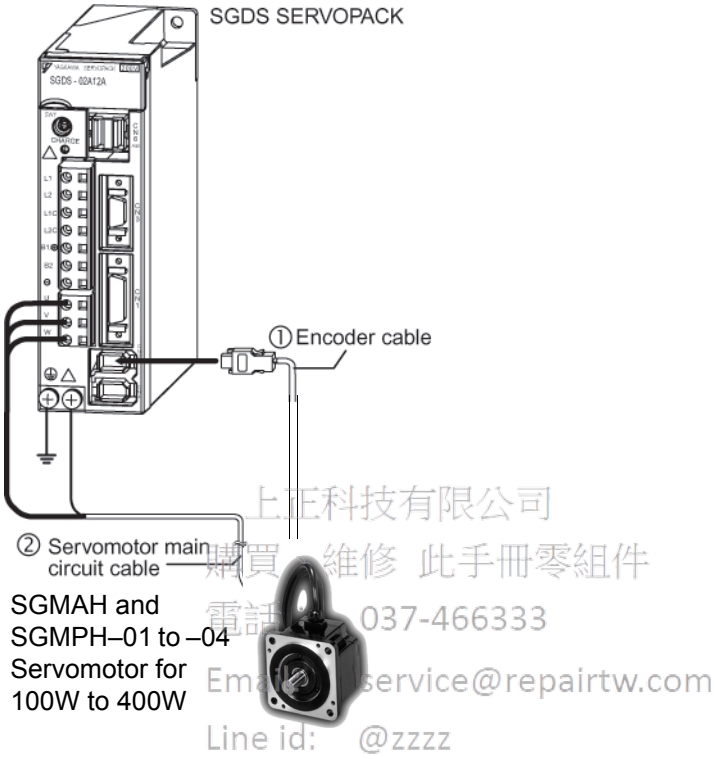

上正科技有限公司
購買 維修 此手冊零組件
電話: 037-466333
Email: service@repairtw.com
Line id: @zzzz
www.repairtw.com

- Encoder cable extension from 20 m (65.6 ft) up to 50 m (164 ft)

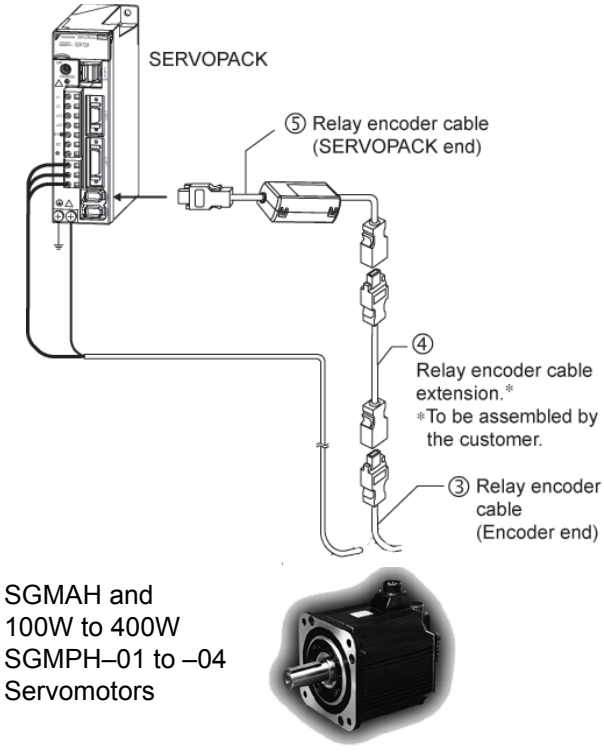

- Use the table below to select pre-wired cables for your SGMAH Sigma II series servomotor.

Cable Description (C)		Motor Size (kW)	Part Number*	Comments	Item Class
Power Cable without Brake	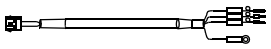	All	JZSP-CMM00-□□(A)	These cables are available in five lengths. Use two digits in the part number's last place: 03: 3m 05: 5m 10: 10m (standard) 15: 15m 20: 20m	Stock**
Power Cable with Brake	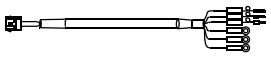		JZSP-CMM10-□□(A)		
Shielded Power Cable without Brake***			BAHCE-□□(A)		Limited Stock
Shielded Power Cable with Brake***			BAHBCE-□□(A)		
Encoder Cable (incremental and absolute)	—		JZSP-CMP00-□□(A)	—	Stock
Encoder Cable (for applications up to 20m) Only for Solder Connections	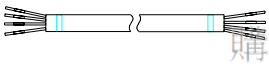		FR-RMCT-SB	These cables are available in any length. For example, to order one FR-RMCT-SB cable, 16m long, specify: quantity: 16 part no.: FR-RMCT-SB	
Encoder Cable (for applications from >20 to <50m maximum) Only for Solder Connections			UL20276-SB		
Input/Output 1CN 1m Cable with Pigtail Leads	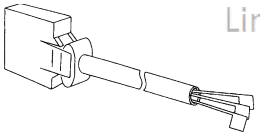		DE9411355		

上正科技有限公司
購買、維修 此手冊零組件
電話： 0974 168333
Email: service@repairtw.com
Line id: @zzzz
www.repairtw.com

* "(A)" at the end of the cable part number is the revision level. Revision level may be changed prior to this catalog reprinting.

** Standard cable lengths are Stock items; non-standard cable lengths are Limited Stock items.

*** Use these power cables where it is important to meet CE (EMC) requirements.Sigma-series servomotor

- Use the table below to select mating connectors or kits for your SGMAH Sigma II series servomotor.

Connector Description **(D)**		Motor Size (kW)	Part Number	Comments	Item Class
Motor Power Mating Connector (without Brake)	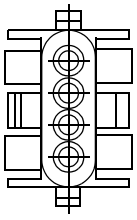	All	JZSP-CMM9-1	These connector kits include pin and socket. Requires use of Amp Crimp Tool (90548-1). (See below).	Stock
Motor Power Mating Connector (with Brake)	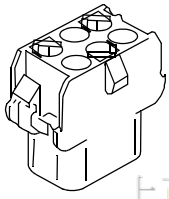		JZSP-CMM9-2		
Amp Crimp Tool	—		90548-1	Crimp tool for Motor Power Connector (JZSP-CMM9-□)	Limited Stock
2CN Amplifier Mating Connector	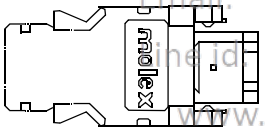		JZSP-CMP9-1	—	Stock
Motor Encoder Mating Connector	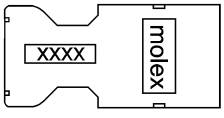		JZSP-CMP9-2	—	
1CN Mating Connector	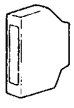		DE9411354	for SGDS I/O 25-pin	
3CN Peripheral Mating Connector	—		YSC-1	—	
5CN Analog Monitor Connector	—		DE9404559	—	

上正科技有限公司
購買、維修 此手冊零組件
電話： 037-466333
Email: service@repairtw.com
line id: @zzzz
www.repairtw.com

- Use the table below to select pre-wired cables for your SGMPH Sigma II servomotor.

Cable Description **(C)**		Motor Size (kW)	Part Number*	Comments	Item Class
Power Cable with Interconnectron Connectors (without Brake)	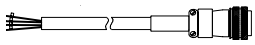	0.1, 0.2, 0.4, 0.8	B4ICE-□□(A)	These UL and CE compliant cables are available in five lengths. Use two digits in the part number's last place: 03: 3m 05: 5m 10: 10m (standard) 15: 15m 20: 20m	Stock**
		1.5	B5ICE-□□(A)		
Power Cable with Interconnectron Connectors (with Brake) (IP67)		0.1, 0.2, 0.4, 0.8	B4IBCE-□□(A)		
		1.5	B5IBCE-□□(A)		
Encoder Cable with Interconnectron Connector (incremental or absolute) (IP67)	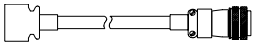	All	A1ICE-□□(A)		
Encoder Cable (for applications up to 20m) Only for Solder Connections	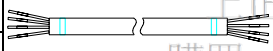		FR-RMCT-SB	These cables are available in any length. For example, to order one FR-RMCT-SB cable, 16m long, specify: quantity: 16 part no.: FR-RMCT-SB	
Encoder Cable (for applications from >20 to <50m) Only for Solder Connections			UL20276-SB		
Input/Output 1m 1CN Cable with Pigtail Leads	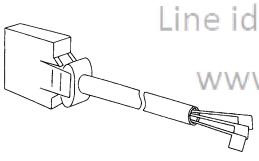		DE9411355		

上正科技有限公司
購買、維修 此手冊零組件
電話： 037-406223
Email: service@repairtw.com
Line id: @zzzz
www.repairtw.com

* The "(A)" at the end of the cable part number is the revision level. Revision level may be changed prior to catalog reprinting.

** Standard cable lengths are Stock items; non-standard cable lengths are Limited Stock items.

- Use the table below to select mating connectors or kits for your SGMPH Sigma II series servomotor.

Connector Description **(D)**		Motor Size (kW)	Part Number	Comments	Item Class
Interconnectron Connector for Motor Power Cable (with or without Brake) (IP67)	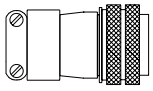	0.1, 0.2, 0.4, 0.8, 1.5	FIN07S-B2	Solder Cup	Stock
2CN Amplifier Mating Connector	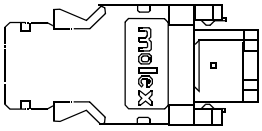		JZSP-CMP9-1	—	
Interconnectron Connector for Encoder Cable (incremental or absolute encoder) (IP67)	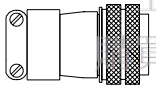		FIN17C-A2	Gauge: 24 - 18AWG Requires Crimp Tool B150 and positioner.	
1CN Mating Connector		All	DE9411354	–	
Interconnectron Crimp Tool	—		B150	—	Limited Stock
Positioner	—		B055/A	—	

上正科技有限公司
購買、維修 此手冊零組件
電話： 037-466333
Email: service@repairtw.com
Line id: @zzzz
www.repairtw.com

2.4.2 Cables for SGMSH Servomotor

- Standard Connection

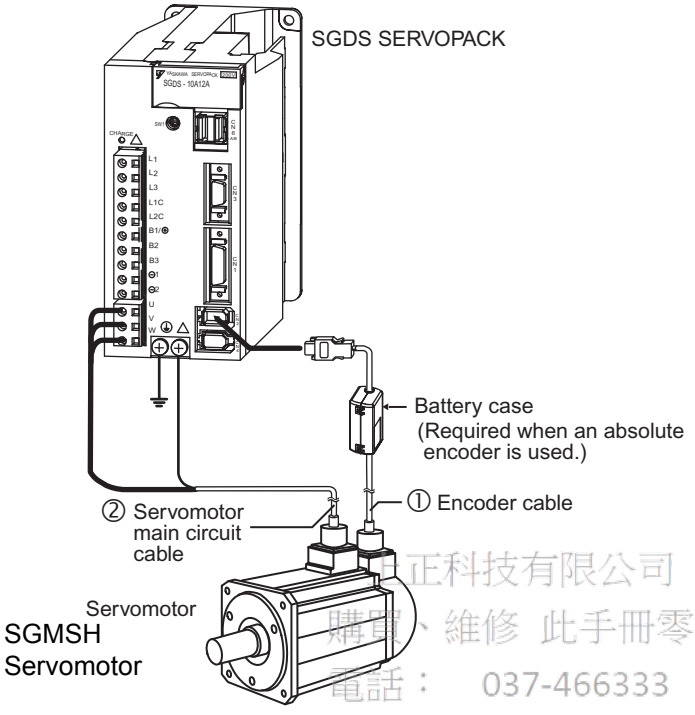

正科技有限公司
購買、維修 此手冊零組件
電話： 037-466333
Email: service@repairtw.com
Line id: @zzzz
www.repairtw.com

- Use the table below to select pre-wired cables for your SGMSH Sigma II series servomotor.

Cable Description **(C)**		Motor Size (kW)	Part Number*		Comments	Item Class
			without Brake	with Brake		
Power Cable with L-type Connectors (IP67)	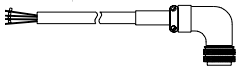	1.0, 1.5, 2.0	B1E-□□(A)	B1BE-□□(A)	Use the following key to specify needed cable length (last two digits of the part number): 03:3m 05:5m 10:10m (standard) 15:15m 20:20m	Stock**
		3.0	B2E-□□(A)	B2BE-□□(A)		
		4.0, 5.0	B3E-□□(A)	B3BE-□□(A)		
Encoder Cable (incremental or absolute) (IP67)	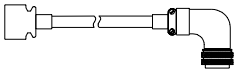	All	JZSP-CMP02-□□(B)		These cables are available in five lengths. Use two digits in the part number's last place: 03:3m 05:5m 10:10m (standard) 15:15m 20:20m	
Encoder Cable (for applications up to 20m) Only for Solder Connections	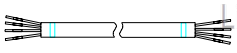		FR-RMCT-SB		These cables are available in any length. For example, to order one FR-RMCT-SB cable, 16m long, specify: quantity: 16 part no.: FR-RMCT-SB	
Encoder Cable (for applications from >20 to <50m) Only for Solder Connections			UL20276-SB			
Input/Output 1CN Cable with Pigtail Leads	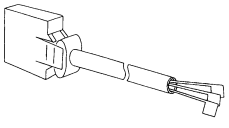		DE9411355		Use the following key to specify required cable length (last digit of part number): 1:1m (standard) 2:2m 3:3m	

* "(A)" at the end of the cable number is the revision level. The revision level may be changed prior to this catalog's reprinting.

** Standard cable lengths are Stock items; non-standard cable lengths are Limited Stock items.

上正科技有限公司
購買、維修 此手冊零組件
電話： 037-466333
Email: service@repairtw.com
Line id: @zzzz
www.repairtw.com

- Use the table below to select mating connectors for your SGMSH Sigma II series servomotor.

Connector Description **(D)**		Motor Size (kW)	Part Number		Comments	Item Class
			without Brake	with Brake		
MS Connector for Motor Power Cable *	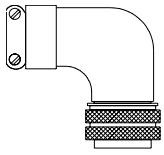	1.0, 1.5, 2.0	MS3106B18-10S	MS3106B20-15S	Straight-type connector	Stock
			MS3108B18-10S	MS3108B20-15S	L-type connector	
			MS3057-10A	MS3057-12A	Cable clamp	
		3.0, 4.0, 5.0	MS3106B22-22S	MS3106B24-10S	Straight-type connector	
			MS3108B22-22S	MS3108B24-10S	L-type connector	
			MS3057-12A	MS3057-16A	Cable clamp	
MS Connector for Encoder Cable (incremental or absolute encoder)	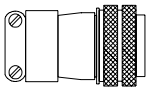	All	MS3106B20-29S		Straight-type connector	
			MS3108B20-29S		L-type connector	
			MS3057-12A		Cable clamp	
1CN Mating Connector			DE9411354		—	
2CN Encoder Mating Connector	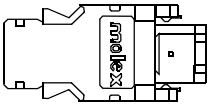		JZSP-CMP9-1		—	
3CN Peripheral Mating Connector	—		YSC-1		—	
5CN Connector and 1m Cable with Pigtails	—		DE9404559		—	

* Choose either a straight or L-type connector and the associated cable clamp for a complete assembly.

上正科技有限公司
購買、維修 此手冊零組件
電話： 037-466333
Email: service@repairtw.com
Line id: @zzzz
www.repairtw.com

- Use the table below to select shielded pre-wired cables for your SGMSH Sigma II servomotor. These are suitable for IP67 environments.

Cable Description **(C)**		Motor Size (kW)	Part Number*		Comments	Item Class
			without Brake	with Brake		
Power Cable with Connectors (IP67)	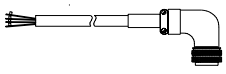	1.0, 1.5, 2.0	B1CE-□□(A)	B1BCE-□□(A)	Use the following key to specify required cable length (last digit of part number): 03. 3m 05: 5m 10: 10m (standard) 15: 15m 20: 20m	Limited Stock
		3.0	B2CE-□□(A)	B3BCE-□□(A)		
		4.0 5.0	B3CE-□□(A)			

* The "(A)" at the end of the cable number indicates the revision level. The revision level may be subject to change prior to this catalog's reprinting.

- Use the table below to select mating connectors for your SGMSH Sigma II series servomotor.

上正科技有限公司
購買、維修 此手冊零組件
電話： 037-466333
Email: service@repairtw.com
Line id: @zzz
www.repairtw.com

Connector Description **(D)**		Motor Size (kW)	Part Number*		Comments	Item Class
			without Brake	with Brake		
Connector for Motor Power Cable**	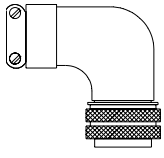	1.0, 1.5, 2.0	CE05-8A18-10SD-B-BAS CE3057-10A-1(D265)	CE05-8A20-15SD-B-BAS CE3057-12A-1(D265)	L-type connector Cable clamp	Limited Stock
		3.0, 4.0, 5.0	CE05-8A22-22SD-B-BAS CE3057-12A-1(D265)	CE05-8A24-10SD-B-BAS CE3057-16A-1(D265)	L-type connector Cable clamp	
Connector for Encoder Cable (incremental or absolute encoder)		All	CE02-6A20-29NSW and CE20BA-S CE3057-12A-3(D265)		L-type connector (plug and back shell) Cable clamp (for diameters 0.265 to 0.394in)	

* Connectors are manufactured by DDK and listed here with the largest standard cable clamp available.

** Choose the connector and the associated cable clamp for a complete assembly. The connectors listed in the table are suitable for IP67 environments.

2.4.3 Cables for SGMGH Servomotors

- Standard Connection

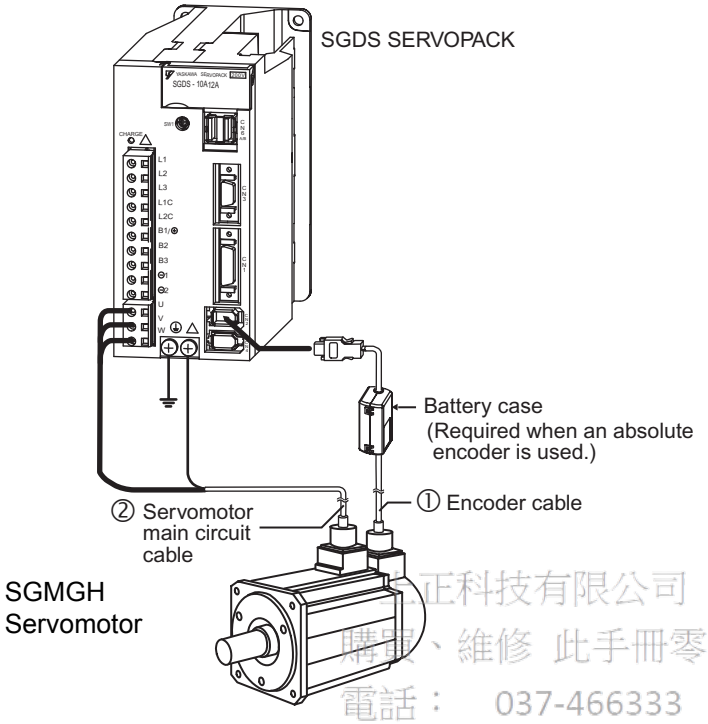

正科技有限公司
購買、維修 此手冊零組件
電話： 037-466333
Email: service@repairtw.com
Line id: @zzzz
www.repairtw.com

- Use the table below to select pre-wired cables for your SGMGH Sigma II series servomotor

Cable Description **(C)**		Motor Size (kW)	Part Number*		Comments	Item Class
			without Brake	with Brake		
Power Cable with Connectors (IP67)	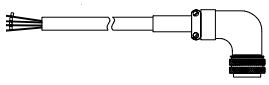	0.5, 0.9, 1.3	B1E-□□(A)	B1BE-□□(A)	Use the following key to specify needed cable length (last two digits of the part number): 03:3m 05:5m 10:10m (standard) 15:15m 20:20m	Stock***
		2.0, 3.0	B2E-□□(A)	B2BE-□□(A)		
		4.4	B3E-□□(A)	B3BE-□□(A)		
		5.5, 7.5**	B5E-□□(A)	B5E-□□(A) B7BCE-□□(A)		
		11, 15**	B6E-□□(A)	B6E-□□(A) B7BCE-□□(A)		
Encoder Cable (incremental or absolute) (IP67)	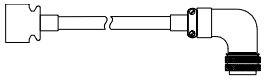	All	JZSP-CMP02-□□(B)		These cables are available in five lengths. Use two digits in the part number's last place: 03: 3m 05: 5m 10: 10m (standard) 15: 15m 20: 20m	
Encoder Cable (for applications up to 20m) for solder connections	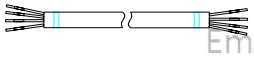		FR-RMCT-SB		These cables are available in any length. For example, to order one FR-RMCT-SB cable, 16m long, specify: quantity: 16 part no.: FR-RMCT-SB	
Encoder Cable (for applications from >20 to <50m) for solder connections			UL20276-SB			
Input/Output 1m 1CN Cable with Pigtail Leads	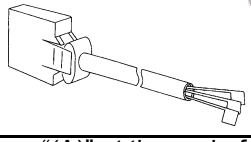		DE9411355			

* "(A)" at the end of the cable number is the revision level. The revision level may be changed prior to this catalog's reprinting.

** When ordering these cables for motors with brakes, order the standard power cable and the additional cable for the brake.

*** Standard cable lengths are Stock items; non-standard cable lengths are Limited Stock items.

上正科技有限公司
購買、維修 此手冊零組件
電話: 037-466333
Email: service@repairtw.com
Line id: @zzzz
www.repairtw.com

- Use the table below to select mating connectors for each SGMGH Sigma II series servomotor.

Connector Description (D)		Motor Size (kW)	Part Number		Comments	Item Class
			without Brake	with Brake		
MS Connector for Motor Power Cable*	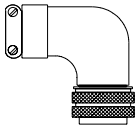	0.5, 0.9, 1.3	MS3106B18-10S	MS3106B20-15S	Straight-type connector	Stock
			MS3108B18-10S	MS3108B20-15S	L-type connector	
			MS3057-10A	MS3057-12A	Cable clamp	
		2.0, 3.0, 4.4	MS3106B22-22S	MS3106B24-10S	Straight-type connector	
			MS3108B22-22S	MS3108B24-10S	L-type connector	
			MS3057-12A	MS3057-16A	Cable clamp	
		5.5, 7.5. 1A, 1E	MS3106B32-17S	MS3106B32-17S and MS3106A10SL-3S	Straight-type connector	
			MS3108B32-17S	MS3108B32-17S and MS3108A10SL-3S	L-type connector	
			MS3057-20A	MS3057-20A MS3057-4A	Cable clamp	
MS Connector for Encoder Cable (incremental or absolute encoder)	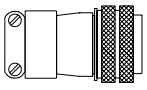	All	MS3106B20-29S		Straight-type connector	
			MS3108B20-29S		L-type connector	
			MS3057-12A		Cable clamp	
1CN Mating Connector	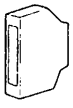		DE9411354		—	
2CN Encoder Mating Connector	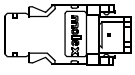		JZSP-CMP9-1		—	
3CN Peripheral Mating Connector	—		YSC-1		—	
5CN Connector and 1m Cable with Pig-tails	—		DE9404559		Can use 5CN for analog speed and torque moni-tor service checks.	

上正科技有限公司
購買、維修 此手冊零組件
電話： 037-466333
Email: service@repairtw.com
Line id: @zzzz
www.repairtw.com

* Choose either a straight or L-type connector and the associated cable clamp for a complete assembly. For example, L-type connector MS3108B18-10S is compatible with cable clamp MS3057-10A. MS connectors listed in the table are non-environmental.

- Use the table below to select shielded pre-wired power cables for your SGMGH Sigma II series servomotor.

Cable Description **(C)**		Motor Size (kW)	Part Number*		Comments	Item Class
			without Brake	with Brake		
Power Cable with Connectors IP67	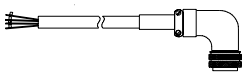	0.5, 0.9, 1.3	B1CE-□□(A)	B1BCE-□□(A)	Use the following key to specify needed cable length (last two digits of the part number): 03: 3m 05: 5m 10: 10m (standard) 15: 15m 20: 20m	Limited Stock
		2.0, 3.0	B2CE-□□(A)	B3BCE-□□(A)		
		4.4	B3CE-□□(A)			
		5.5, 7.5	B5CE-□□(A)	B5CE-□□(A) B7BCE-□□(A)		
		11, 15	B6CE-□□(A)	B6CE-□□(A) B7BCE-□□(A)		

* "(A)" at the end of the cable number is the revision level, which may be changed prior to this catalog's reprinting.

- Use the table below to select mating connectors for your SGMGH Sigma II series servomotor.

上正科技有限公司
購買、維修 此手冊零組件
電話： 07-466333
email: service@repairtw.com
Line id: @zzz
www.repairtw.com

Connector Description **(D)**		Motor Size (kW)	Part Number		Comments**	Item Class
			without Brake	with Brake		
Connector for Motor Power Cable*	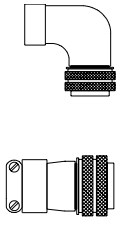	0.5, 0.9, 1.3	CE05-8A18-10SD-B-BAS CE3057-10A-1(D265)	CE05-8A20-15SD-B-BAS CE3057-12A-1(D265)	L-type connector Cable clamp	Limited Stock
		2.0, 3.0, 4.4	CE05-8A22-22SD-B-BAS CE3057-12A-1(D265)	CE05-8A24-10SD-B-BAS CE3057-16A-1(D265)	L-type connector Cable clamp	
		5.5, 7.5, 11, 15	CE05-8A32-17SD-B-BAS or CE05-6A32-17SD-B-BSS and CE3057-20A-1		L-type connector or Straight-type connector and Cable clamp (diameters 0.866 to 0.937in)	
Connector for Holding Brake	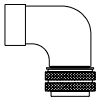	All	CE05-8A10SL-3SC-B-BAS and CE3057-4A-1 (D265)		L-type connector for holding brake and Cable clamp (diameters 0.142 to 0.220in)	
Connector for Encoder Cable (incremental or absolute encoder)			CE02-6A20-29NSW and CE20BA-S and CE3057-12A-3(D265)		L-type connector (plug and back shell) and Cable clamp (diameters 0.265 to 0.394in)	

* Choose the connector and the associated cable clamp for a complete assembly. Connectors listed in this table are environmentally sealed.

** Connectors are manufactured by DDK and listed here with the largest standard cable clamp available.

*** Use flexible cables for movable sections such as robot arms.

2.4.4 Cables for SGMCS Servomotor

- Standard Connection

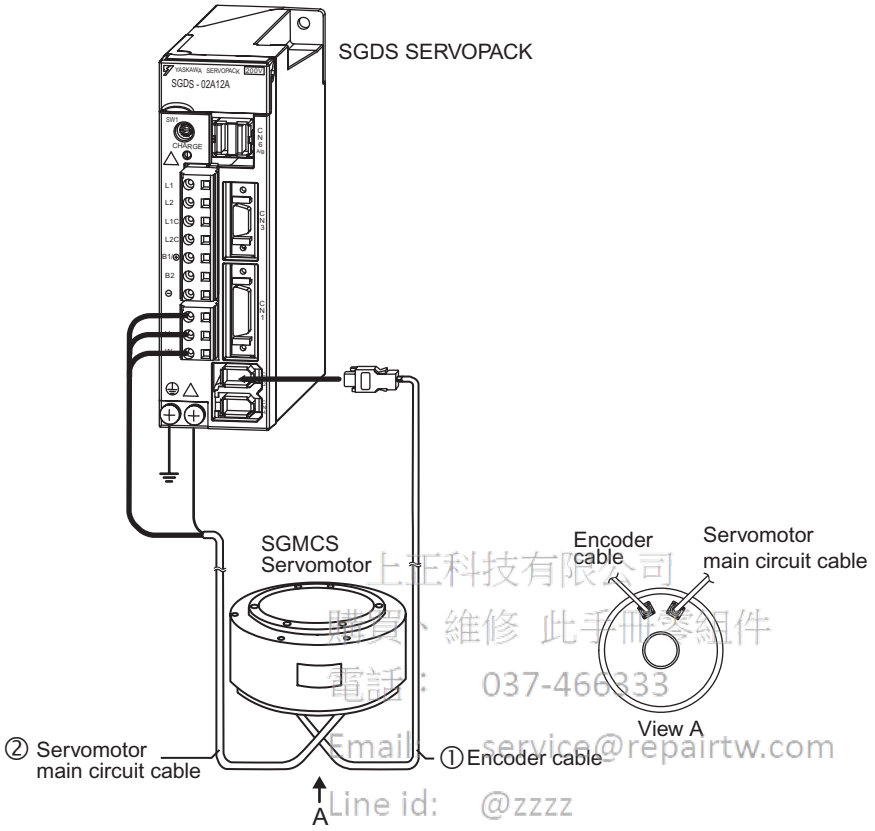

上正科技有限公司
購買、維修 此手冊零組件
電話： 037-466333
Email: service@repairtw.com
Line id: @zzzz
www.repairtw.com

- Encoder cable extension from 20 m (65.6 ft) up to 50 m (164 ft)

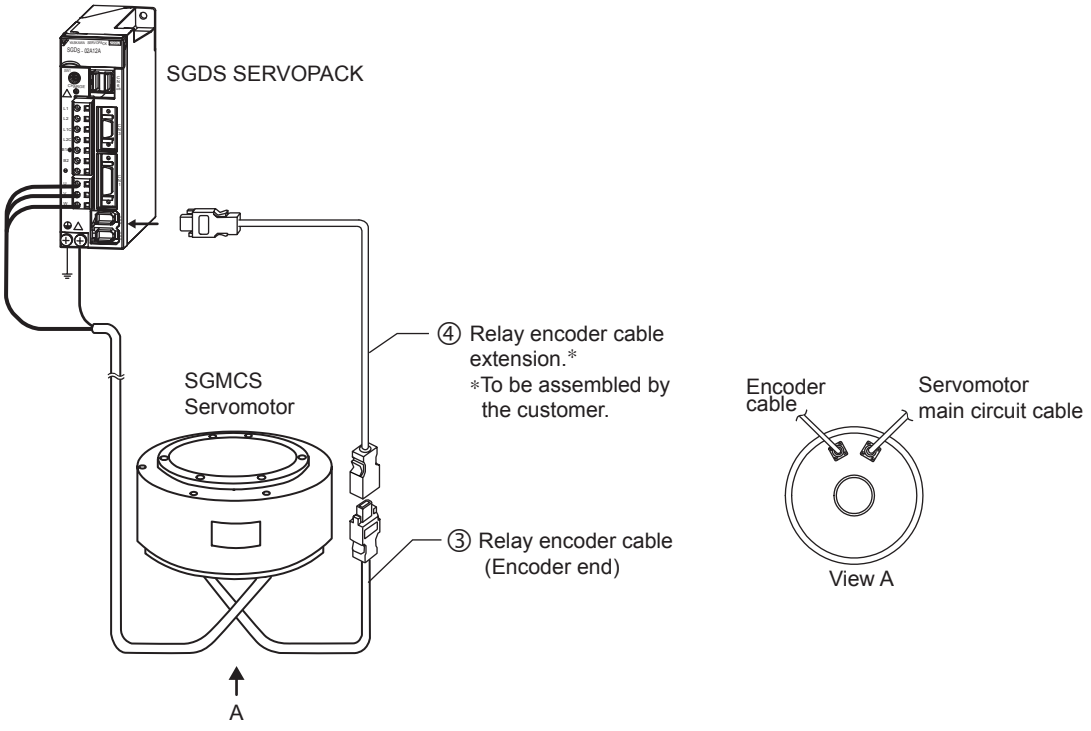

Name		Servomotor Model	Length	Type: Standard Type	Type: Flexible Type *1	Specifications
① CN2 Encoder Cables	Cable with connectors at both ends (For incremental and absolute encoder)		3 m (9.84 ft)	JZSP-CMP60-03	JZSP-CSP60-03	SERVOPACK end / Encoder end 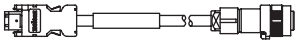
			5 m (16.4 ft)	JZSP-CMP60-05	JZSP-CSP60-05	
			10 m (32.8 ft)	JZSP-CMP60-10	JZSP-CSP60-10	
			15 m (49.2 ft)	JZSP-CMP60-15	JZSP-CSP60-15	
			20 m (65.6 ft)	JZSP-CMP60-20	JZSP-CSP60-20	
	Cable with loose wires at encoder end (For incremental and absolute encoder)		3 m (9.84 ft)	JZSP-CMP03-03	JZSP-CMP13-03	SERVOPACK end / Encoder end 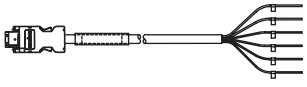
			5 m (16.4 ft)	JZSP-CMP03-05	JZSP-CMP13-05	
			10 m (32.8 ft)	JZSP-CMP03-10	JZSP-CMP13-10	
			15 m (49.2 ft)	JZSP-CMP03-15	JZSP-CMP13-15	
			20 m (65.6ft)	JZSP-CMP03-20	JZSP-CMP13-20	
	SERVOPACK end connector kit			JZSP-CMP9-1		Soldered
	Connectors at servomotor end (straight plug)			JN1DS10SL1*2		Caulking
	Connectors at servomotor end (Socket contact)			JN1-22-22S-PKG100*2		
②Servomotor Main Circuit Cable Connectors	Without brakes (Common to all the models)		3 m (9.84 ft)	JZSP-CMM60-03	JZSP-CSM60-03	SERVOPACK end / Servomotor end 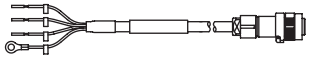
			5 m (16.4 ft)	JZSP-CMM60-05	JZSP-CSM60-05	
			10 m (32.8 ft)	JZSP-CMM60-10	JZSP-CSM60-10	
			15 m (49.2 ft)	JZSP-CMM60-15	JZSP-CSM60-15	
			20 m (65.6 ft)	JZSP-CMM60-20	JZSP-CSM60-20	

* 1. Use flexible cables for movable sections such as robot arms.
* 2. Contact Japan Aviation Electronics Industry, Ltd.

上正科技有限公司
購買、維修、此手冊零組件
電話：037-466333
Email: service@repairtw.com
Line id: @7337
www.repairtw.com

Name		Servomotor Model	Length	Type		Specifications
				Standard Type	Flexible Type *1	
②Servomotor Main Circuit Cable Connectors (Cont.)	Servomotor end connector			JN1DS04FK1*2		Soldered
③ Encoder Extenser Cables	Encoder end (Same for incremental and absolute encoder)		0.3 m (0.98 ft)	JZSP-CSP13		SERVOPACK end Encoder end

* 1. Use flexible cables for movable sections such as robot arms.
* 2. Contact Japan Aviation Electronics Industry, Ltd.

上正科技有限公司
購買、維修 此手冊零組件
電話： 037-466333
Email: service@repairtw.com
Line id: @zzzz
www.repairtw.com

2.5 Selecting Peripheral Devices

2.5.1 Special Options

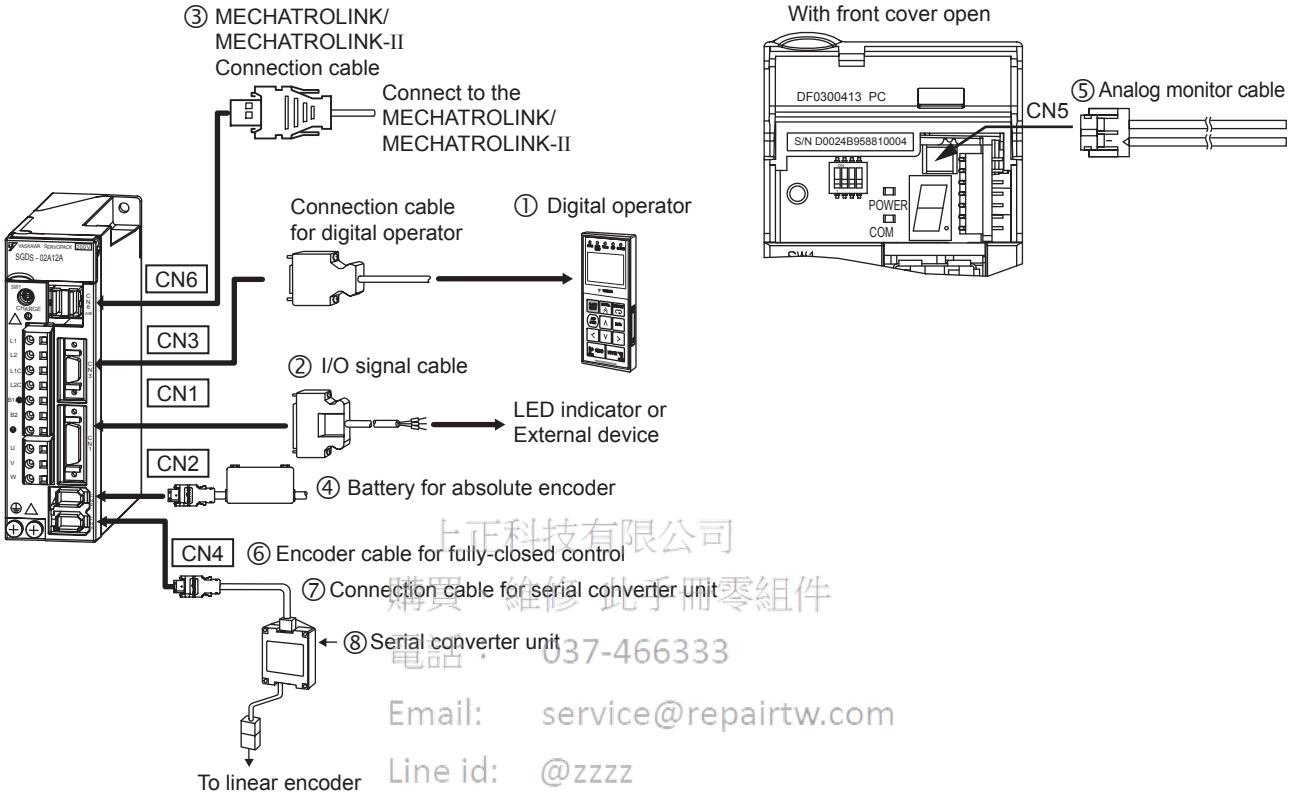

上正科技有限公司
購買 維修 此手冊零組件
電話： 037-466333
Email: service@repairtw.com
Line id: @zzzz
www.repairtw.com

Name		Length	Type	Figure	Refer-ence
① Digital Operator			JUSP-OP05A	With 1 m (3.28 ft) connection cable	4.4.1
② CN1 I/O Signal Cables	Connector Kit		DE9411354	Soldered	4.3.1
	Connectors		connector : 10126-3000VE case : 10326-52A0-008 (Sumitomo 3M Ltd.)		
③ CN6A CN6B MECHATROLINK/ MECHAROLINK II Communication cable	Cable with connectors at both end	0.5 m (1.64 ft)	JEPMC-W6003-A5		4.4.10
		1 m (3.28 ft)	JEPMC-W6003-01		
		–	JEPMC-W6003-**		
	Terminators		JEPMC-W6022		4.4.11
⑤ CN5 Analog Monitor Cable		1 m (3.28 ft)	DE9404559	SERVOPACK end	4.4.2

Note: ** is the ordered length.

Name		Length	Type	Figure	Reference
⑥ CN4 Encoder Cable for Fully-closed Control	SERVOPACK and connector kit		JZSP-CMP9-1	Soldered	–
⑦Connection Cable for Serial Converter Unit		3 m (9.84 ft)	JZSP-CLP20-03	SERVOPACK end Serial converter unit end	4.4.12
		5 m (16.4 ft)	JZSP-CLP20-05		
		10 m (32.8 ft)	JZSP-CLP20-10		
		15 m (49.2 ft)	JZSP-CLP20-15		
		20 m (65.6 ft)	JZSP-CLP20-20		
⑧Serial Converter Unit	For Linear Scale manufactured by Heidenhain Corp.		JZDP-A003-000	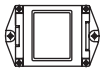	4.4.13
	For Linear Scale manufactured by Renishaw Inc.		JZDP-A005-000	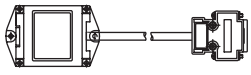	

廣正科技有限公司
購買、維修 此手冊零組件
電話： 037-466333
Email: service@repairtw.com
Line id: @zzzz
www.repairtw.com

2.5.2 Molded-case Circuit Breaker and Fuse Capacity

Main Circuit Power Supply	Servo Amp. Model		Power Supply Capacity per Servo Amplifier (kVA)	Current Capacity of Molded-case Circuit Breaker or Fuse (A_{rms})*1, *2 (Refer to 4.4.5)
	Capacity (kW)	SGDS-		
Single-phase 100 V	0.05	A5F	0.25	4
	0.10	01F	0.40	
	0.20	02F	0.60	6
	0.40	04F	1.2	12
Single-phase 200 V	0.05	A5A	0.25	4
	0.10	01A	0.40	
	0.20	02A	0.75	
	0.40	04A	1.2	8
	0.80	08A	2.2	16
Three-phase 200 V	0.45	05A	1.4	4
	1.0	10A	2.3	7
	1.5	15A	3.2	10
	2.0	20A	4.3	12
	3.0	30A	5.9	17

* 1. Nominal value at the rated load. The specified derating is required to select an appropriate fuse capacity.

* 2. Cutoff characteristics (25°C): 200% two seconds min. and 700% 0.01 seconds min.

Note: Do not use a fast-acting fuse. Because the SERVOPACK's power supply is a capacitor input type, a fast-acting fuse may blow when the power is turned ON.

上正科技有限公司
購買、維修、此手冊零組件
電話： 037-466333
Email: service@repairtw.com
Line id: @zzzz
www.repairtw.com

IMPORTANT

The SGDS SERVOPACK does not include a protective grounding circuit. Install a ground-fault protector to protect the system against overload and short-circuit or protective grounding combined with the molded-case circuit breaker.

2.5.3 Noise Filters, Magnetic Contactors, Surge Protectors and AC/DC Reactors

Main Circuit Power Supply	SERVOPACK Model		Recommended Noise Filter (Refer to 4.4.6)		Magnetic Contactor (Refer to 4.4.7)	Surge Protector (Refer to 4.4.8)	AC/DC Reactor (Refer to 4.4.9)
	Capacity (kW)	SGDS-	Type	Specifications			
Single-phase 100 V	0.05	A5F	FN2070-6/07	Single-phase 250 VAC, 6 A	HI-11J (20 A)	R•C•M -601BQZ-4	X5053
	0.10	01F					
	0.20	02F	FN2070-10/07	Single-phase 250 VAC, 10 A			X5054
	0.40	04F	FN2070-16/07	Single-phase 250 VAC, 16 A	HI-15J (35 A)		X5061
Single-phase 200 V	0.05	A5A	FN2070-6/07	Single-phase 250 VAC, 6 A	HI-11J (20 A)		X5052
	0.10	01A					
	0.20	02A					X5053
	0.40	04A	FN2070-10/07	Single-phase 250 VAC, 10 A			X5054
	0.80	08A	FN2070-16/07	Single-phase 250 VAC, 16 A	HI-15J (35 A)		X5056
Three-phase 200 V	1.0	10A	FN258L-16/07	Three-phase 250 VAC, 16 A		R•C•M -601BUZ-4	X5061
	15	15A					Consult Factory
	2.0	20A					Consult Factory
	3.0	30A	Fn258L-30/07	Three-phase 480VAC, 30A	HI-18J (50 A)		Consult Factory

Note: 1. If some SERVOPACKs are wired at the same time, select the proper magnetic contactors according to the total capacity.

2. The following table shows the manufacturers of each device.

Peripheral Device	Manufacturer
Noise Filter	Schaffner Electronic
Magnetic Contactor	Yaskawa Siemens Automation & Drives Corp.
Surge Protector	Okaya Electric Industries Co., Ltd.
AC/DC Reactor	Yaskawa Controls Co., Ltd.

上正科技有限公司
購買、維修 此手冊零組件
電話： 037-462555
Email: service@repairtw.com
Line Id: @zzzz
www.repairtw.com

2.5.4 Regenerative Resistors

Main Circuit Power Supply	SERVOPACK Model		Regenerative Resistor (Refer to 4.4.3 and 5.7)		
	Capacity (kW)	SGDS-	Built-in		Externally Connected
			Resistance (Ω)	Capacity (W)	
Single-phase 100 V	0.05	A5F	–	–	–
	0.10	01F			
	0.20	02F			
	0.40	04F			
Single-phase 200 V	0.05	A5A	–	–	–
	0.10	01A			
	0.20	02A			
	0.40	04A			
	0.80	08A	50	60	
Three-phase 200 V	1.0	10A	50	60	–
	1.5	15A	30	70	
	2.0	20A	25	140	
	3.0	30A	12.5	140	

Note: 1. If the SERVOPACK cannot process the regenerative power, an external regenerative resistor is required. Refer to *4.4.3 External Regenerative Resistor* and *5.7 Connecting Regenerative Resistors*.

2. The following table shows the manufacturers of each device.

Peripheral Device	Manufacturer
External Regenerative Resistor	Iwaki Wireless Research Institute

上正科技有限公司
購買、維修 此手冊零組件
電話： 037-466333
Email: service@repairtw.com
Line id: @zzzz
www.repairtw.com

上正科技有限公司
購買、維修 此手冊零組件
電話： 037-466333
Email: service@repairtw.com
Line id: @zzzz
www.repairtw.com

3

SERVOPACK Specifications and Dimensional Drawings

上正科技有限公司
購買、維修、出售四零組件
電話：886-4-2312033
Email: sanjeng@ms21.hinet.net
Line id: @7777
www.sanjeng.com.tw

3.1 SERVOPACK Ratings and Specifications - - - - - - - - - - - - - - - 3-2

3.2 SERVOPACK Installation - 3-5

3.3 SERVOPACK Internal Block Diagrams - - - - - - - - - - - - - - - - - 3-7
- 3.3.1 Single-phase 100 V, 50 W to 400 W - 3-7
- 3.3.2 Single-phase 200 V, 50 W to 400 W - 3-8
- 3.3.3 Three-phase 200 V, 1.0 kW - 3-9
- 3.3.4 Single-phase 200 V 800 W - 3-10

3.4 SERVOPACK's Power Supply Capacities and Power Losses - 3-12

3.5 SERVOPACK Overload Characteristics and Load Moment of Inertia - 3-13
- 3.5.1 Overload Characteristics - 3-13
- 3.5.2 Starting and Stopping Time - 3-13
- 3.5.3 Load Moment of Inertia - 3-14

3.6 SERVOPACK Dimensional Drawings - - - - - - - - - - - - - - - - - - 3-20

3.7 Dimensional Drawings of Base-mounted SERVOPACK Model SGDS-□□□12A / -□□□12A - - - - - - - - - - - - - - - - - - 3-21
- 3.7.1 Single-phase 100 V/200 V, 50 W/100 W/200 W - - - - - - - - - - - - - - - - 3-21
- 3.7.2 Single-phase 100 V, 400 W - 3-21
- 3.7.3 Single-phase 200 V, 400 W - 3-22
- 3.7.4 Single-phase 200 V, 800 W, Three-phase 200 V, 1.0 kW - - - - - - - - - 3-22

3.1 SERVOPACK Ratings and Specifications

SERVOPACK Model SGDS-				A5	01	02	04	08	10	15	20	30
Basic Specifications	Max. Applicable Servomotor Capacity [kW]			0.05	0.1	0.2	0.4	0.75	1.0	1.5	2.0	3.0
	100 V	Continuous Output Current [Arms]		0.66	0.91	2.1	2.8	–	–	–	–	–
		Max. Output Current [Arms]		2.1	2.8	6.5	8.5	–	–	–	–	–
	200 V	Continuous Output Current [Arms]		0.66	0.91	2.1	2.8	5.5	7.6	10.7	16.7	23.8
		Max. Output Current [Arms]		2.1	2.8	6.5	8.5	16.9	17.0	28	42	56
	Input Power Supply	SERVOPACK Capacity Range for 100/200 V		Single-phase 100 VAC				–				
				Single-phase 200 VAC				Single-phase 200 VAC	–			
				–				–	Three-phase 200 VAC			
		200 V	Main Circuit	Three-phase (or single-phase) 200 to 230 VAC +10 to -15%, 50/60 Hz								
			Control Circuit	Single-phase 200 to 230 VAC +10 to -15%, 50/60 Hz								
		100 V	Main Circuit	Single-phase 100 to 115 VAC +10 to -15%, 50/60 Hz								
			Control Circuit	Single-phase 100 to 115 VAC +10 to -15%, 50/60 Hz								
	Control Method			Single or three-phase full-wave rectification IGBT-PWM (sine-wave driven)								
	Feedback			Serial encoder: 17-bit (incremental/absolute)								
	Operating Conditions	Ambient/Storage Temperature		0 to +55°C/ -20 to +85°C								
		Ambient/Storage Humidity		90% RH or less (with no condensation)								
		Vibration/Shock Resistance		4.9 m/s^2 / 19.6 m/s^2								
	Configuration			Base-mounted (Rack mounting available as an option)								
	Performance	Speed Control Range		1:5000 (The lowest speed of the speed control range is the speed at which the servomotor will not stop with a rated torque load.)								
		Speed Regulation*	Load Regulation	0 to 100% load: 0.01% max. (at rated speed)								
			Voltage Regulation	Rated voltage ±10%: 0% (at rated speed)								
			Temperature Regulation	25 ± 25 °C: ±0.1% max. (at rated speed)								
		Frequency Characteristics		600 Hz (at $J_L = J_M$)								
		Torque Control Tolerance (Repeatability)		±1%								
		Soft Start Time Setting		0 to 10 s (Can be set individually for acceleration and deceleration.)								

台灣科技有限公司
購買、維修、租賃伺服系統
電話：037-456333
Email: service@repairtw.com
Line id: @zzzz
www.repairtw.com

SERVOPACK Model SGDS-		A5	01	02	04	08	10	15	20	30
Built-in Functions	Dynamic Brake (DB)	Operated at main power OFF, servo alarm, servo OFF or overtravel								
	Regenerative Processing	External regenerative resistor				Built-in				
	Overtravel Prevention (OT)	Dynamic brake stop at P-OT or N-OT input, deceleration to a stop, or free run to a stop								
	Electronic Gear	$0.001 \leq B/A \leq 1000$								
	Protection	Overcurrent, overvoltage, insufficient voltage, overload, regeneration error, main circuit sensor error, heat sink overheat, power line phase loss, position error pulse overflow, overspeed, encoder error, overrun detection, CPU error, parameter error, etc.								
	LED Display	CHARGE, power, COM 7-segment LEDs (status display)								
	Others	Reverse connection, zero position search, automatic motor discrimination function								

* Speed regulation is defined as follows:

$$\text{Speed regulation} = \frac{\text{No-load motor speed} - \text{Total load motor speed}}{\text{Rated motor speed}} \times 100\%$$

The motor speed may change due to voltage variations or amplifier drift and changes in processing resistance due to temperature variation. The ratio of speed changes to the rated speed represent speed regulation due to voltage and temperature variations.

上正科技有限公司
購買、維修 此手冊零組件
電話： 037-466333
Email: service@repairtw.com
Line id: @zzzz
www.repairtw.com

Applicable SERVOPACK Model			SGDS-□□□12□ All Capacities	
MECHATROLINK Communications		Communications Protocol	MECHATROLINK II	MECHATROLINK
		Station Address	41H to 5FH (Max. number of slaves : 30)	41H to 4FH (Max. number of slaves : 15)
		Transmission Speed	10 Mbps	4 Mbps
		Transmission Cycle	250 µs, 05 to 4 ms (multiple of 0.5 ms) (In accordance with the setting of the host controller)	2 ms
		Number of Words for Link Transmission	Can be switched between 17-bytes / station and 32-bytes / station by the setting of bit 2 for the SW2 switch.	17-byte / station
Command Method		Performance	Position control, speed control, and torque control through MECHATROLINK II communications	Position control through MECHATROLINK communications
		Command Input	MECHATROLINK commands and MECHATROLINK II commands (For sequence, motion, date setting/reference, monitor, adjustment, and other commands.)	
Functions for Position Control		Acceleration / Deceleration Function	Linear 1st and 2nd step asymmetrical acceleration/deceleration, exponential function acceleration/deceleration, and movement average acceleration and deceleration	
		Fully-closed Control	Position control using the fully-closed feedback is available.	
Fully-closed Control System Specifications		Interface	Serial communications interface	
		Power Supply and Converter for Fully-closed PG	Provided by the customer.	
I/O Signals	Sequence Input	Signal allocation can be modified.	Select any seven of the following signals: forward run prohibited (P-OT), reverse run prohibited (N-OT), homing deceleration limit switch, external latch signal 1, 2, 3, forward external torque limit, reverse external torque limit	
	Sequence Output	Fixed Output	Alarm	
		Signal allocation can be modified.	Select any of the following signals: positioning completion (speed coincidence), rotation detection, speed limit detection, servo ready, current limit detection, release brake, warning, NEAR signal	
	Position Output	Output	Phase-A, Phase-B, Phase-C: line driver output	
		Dividing Pulse	Optional dividing pulse	
Others	Analog Monitor (CN5)		Output voltage: ± 8 V Analog monitor connector built in for monitoring speed, torque and other reference signals. Speed: 1 V/1000 RPM Torque: 1 V/rated torque error pulse: 0.05 V/reference unit	
	Communi-cations	Interface	Digital Operator (hand type)	
		Function	Status display, parameter setting, monitor display, alarm traceback display, JOG operation	

上作科技有限公司
購買、維修、此手冊零組件
電話： 037-160338
Email: service@repairtw.com
Line Id: @3778
www.repairtw.com

3.2 SERVOPACK Installation

The SGDS SERVOPACK can be mounted on a base or on a rack. Incorrect installation will cause problems. Always observe the following installation instructions.

⚠ WARNING
• After voltage resistance test, wait at least five minutes before servicing the product. (Refer to “Voltage Resistance Test” on the next page.) Failure to observe this warning may result in electric shock. • Connect the main circuit wires, control wires, and main circuit cables of the motor correctly. Incorrect wiring will result in failure of the SERVOPACK.

Storage	Store the SERVOPACK within the following temperature range if it is stored with the power cable disconnected. Temperature: -20 to 85°C (68 to 185°F) Humidity: 90%RH or less (with no condensation)
Operating Conditions	• Installation category (Overvoltage category) * : II • Pollution degree * : 2 • Protection class * : 1X • Altitude: 1000 m max. * Conforming to the following standards. • UL508C • CSA C22.2 No.14 • EN50178 • EN55011 group 1 class A • EN61000-6-2
Installation Site	Installation in a Control Panel Design the control panel size, unit layout, and cooling method so the temperature around the SERVOPACK does not exceed 55°C (131 ° F). Installation Near a Heating Unit Minimize the heat radiating from the heating unit as well as any temperature rise caused by natural convection so the temperature around the SERVOPACK does not exceed 55°C (131 ° F). Installation Near a Source of Vibration Install a vibration isolator beneath the SERVOPACK to avoid subjecting it to vibration. Installation at a Site Exposed to Corrosive Gas Corrosive gas does not have an immediate effect on the SERVOPACK but will eventually cause the electronic components and contactor-related devices to malfunction. Take appropriate action to avoid corrosive gas. Other Situations Do not install the SERVOPACK in hot, humid locations or locations subject to excessive dust or iron powder in the air.

E-正科技有限公司
購買、維修 此手冊零組件
電話： 037-466333
Email: service@repairtw.com
Line Id: @zzzz
www.repairtw.com

Orientation	Install the SERVOPACK perpendicular to the wall as shown in the figure. The SERVOPACK must be oriented this way because it is designed to be cooled by natural convection or a cooling fan. Secure the SERVOPACK using two to four of the mounting holes. The number of holes depends on the capacity. 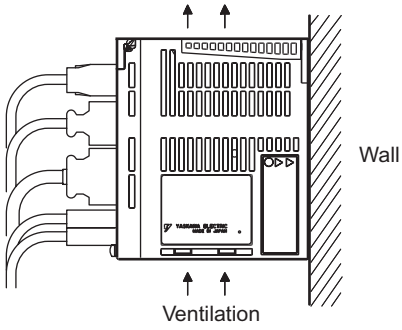
Installation	Follow the procedure below to install multiple SERVOPACKs side by side in a control panel. 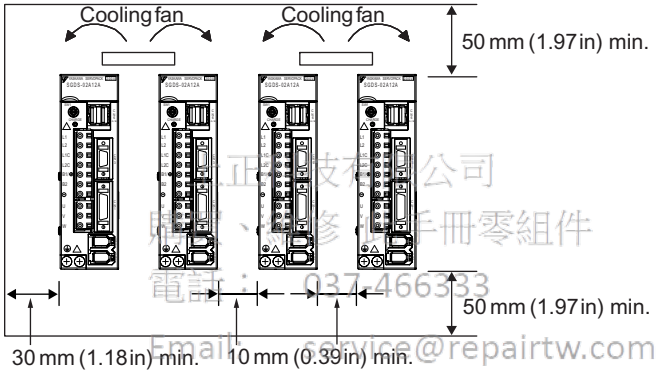 SERVOPACK Orientation Install the SERVOPACK perpendicular to the wall so the front panel containing connectors faces outward. Cooling As shown in the figure above, allow sufficient space around each SERVOPACK for cooling by cooling fans or natural convection. Side-by-side Installation When installing SERVOPACKs side by side as shown in the figure above, allow at least 10 mm (0.39 in) between and at least 50 mm (1.97 in) above and below each SERVOPACK. Install cooling fans above the SERVOPACKs to avoid excessive temperature rise and to maintain even temperature inside the control panel. Environmental Conditions in the Control Panel Ambient Temperature:0 to 55°C (32 to 131° F) Humidity: 90% RH or less Vibration: 0.5 G (4.9 m/s^2) Condensation and Freezing:None Ambient Temperature for Long-term Reliability: 45°C max.
Voltage Resistance Test	Conduct voltage resistance tests under the following conditions. • Voltage:1500 Vrms AC for one minute • Braking current:30 mA or more • Frequency:50 or 60 Hz • Voltage applied points For SGDS-□□□12□ SERVOPACKs: Between the ground terminals and the point where the terminals L1, L2, (L3), L1C, L2C, U, V, and W are connected.

電話：037-466333
Email: service@repairtw.com
Line Id: @zzzz
www.repairtw.com

3.3 SERVOPACK Internal Block Diagrams

3.3.1 Single-phase 100 V, 50 W to 400 W

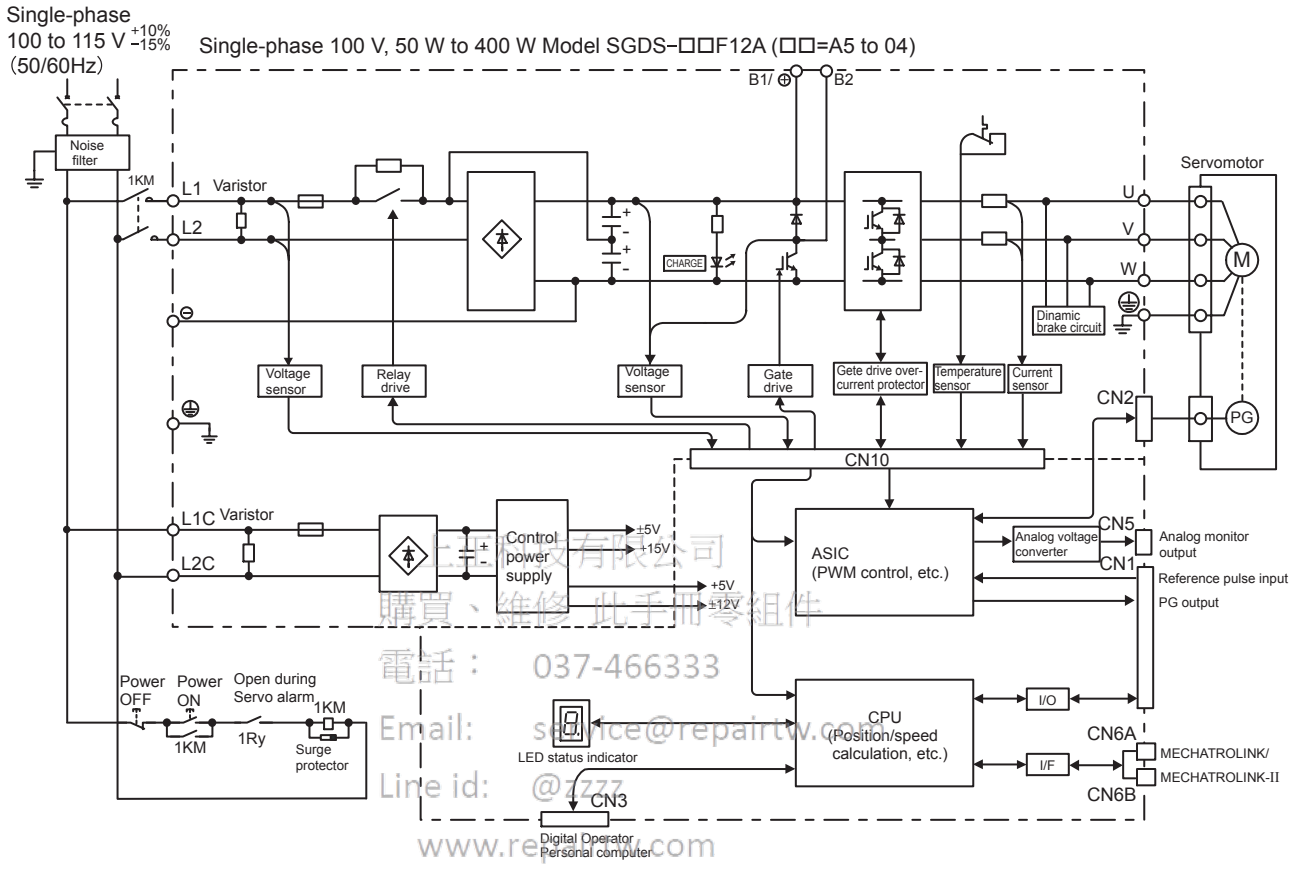

正源科技有限公司
購買、維修 此手冊零組件
電話： 037-466333
Email: service@repairtw.com
Line id: @zzzz
www.repairtw.com

3.3.2 Single-phase 200 V, 50 W to 400 W

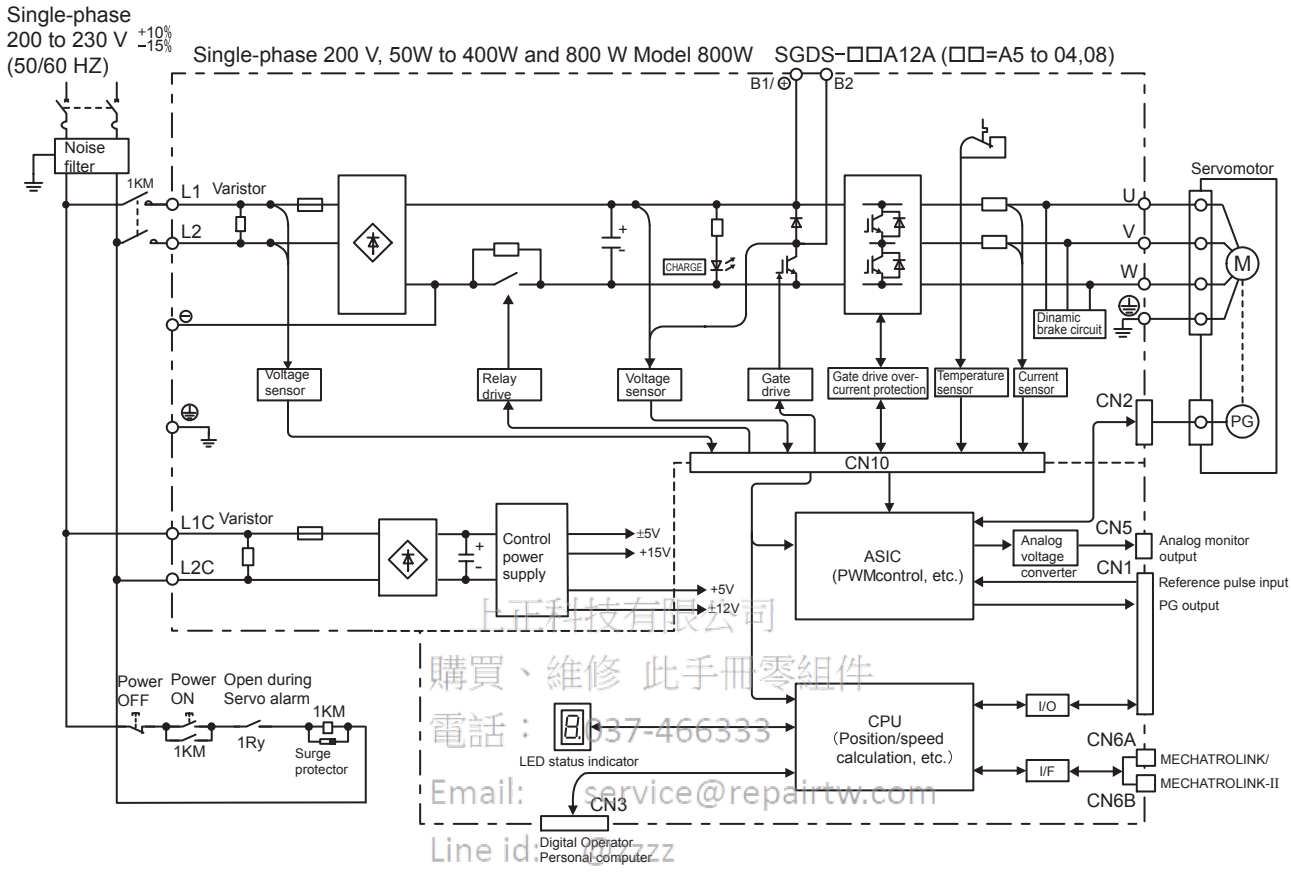

上正科技有限公司
購買、維修 此手冊零組件
電話： 037-466333
Email: service@repairtw.com
Line id: @zzz
www.repairtw.com

3.3.3 Three-phase 200 V, 1.0 kW

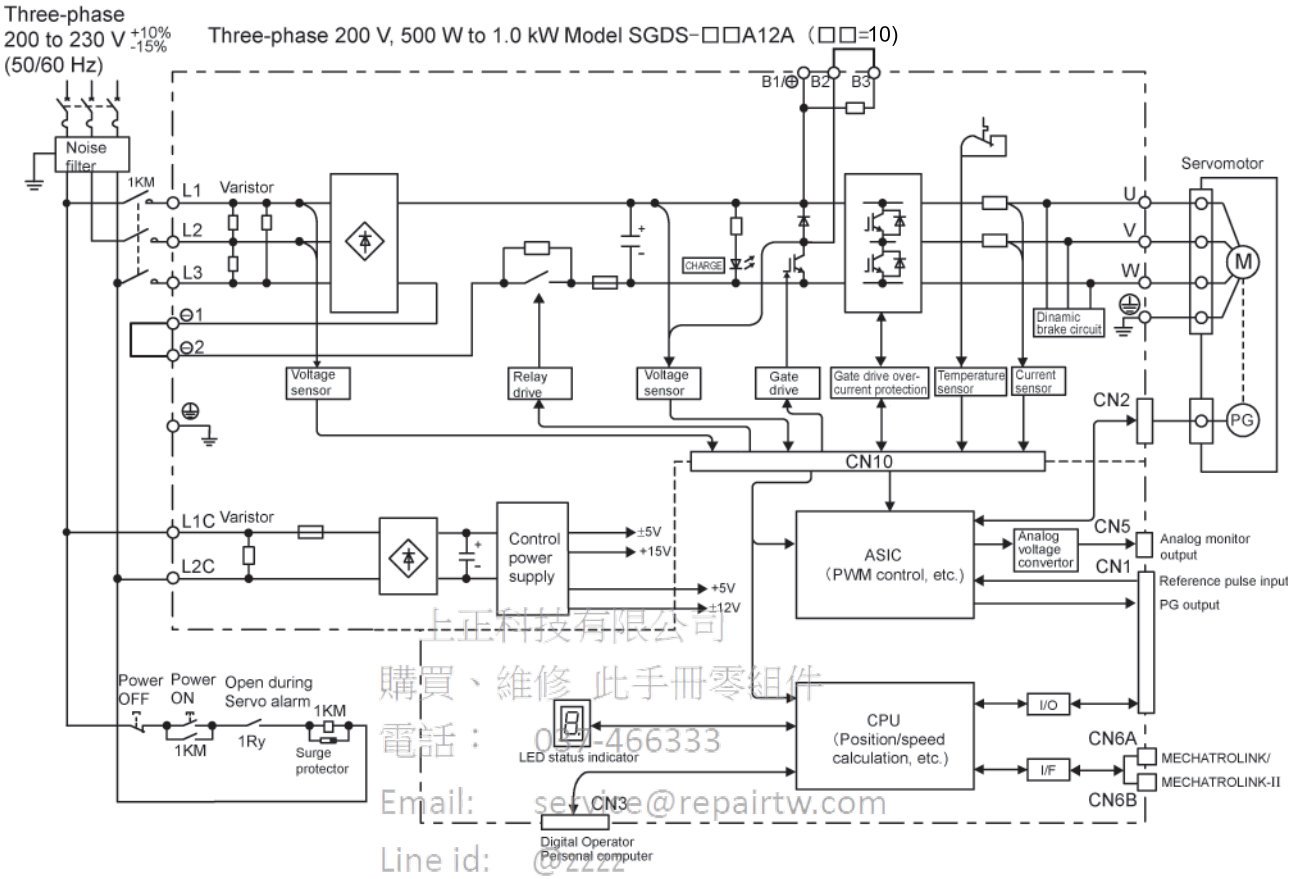

上正科技有限公司
購買、維修 此手冊零組件
電話： 0[illegible]-466333
Email: service@repairtw.com
Line id: @2222
www.repairtw.com

3.3.4 Single-phase 200 V 800 W

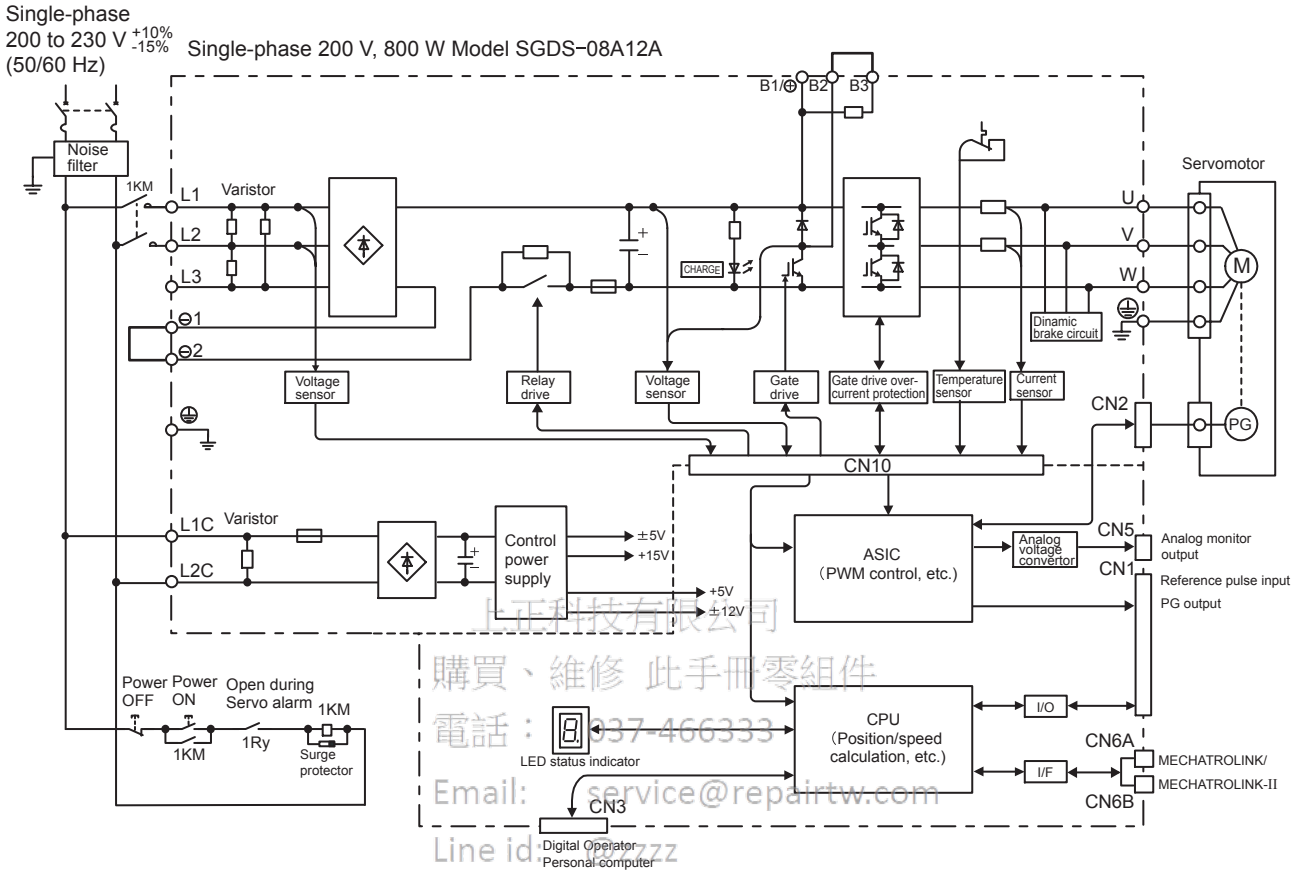

比正科技有限公司
購買、維修 此手冊零組件
電話：037-466333
Email: service@repairtw.com
Line id: @zzz
www.repairtw.com

Note: L3 terminal is not used. Do not connect.

3.3.5 Three-phase 200 V, 3.0~5.0kW

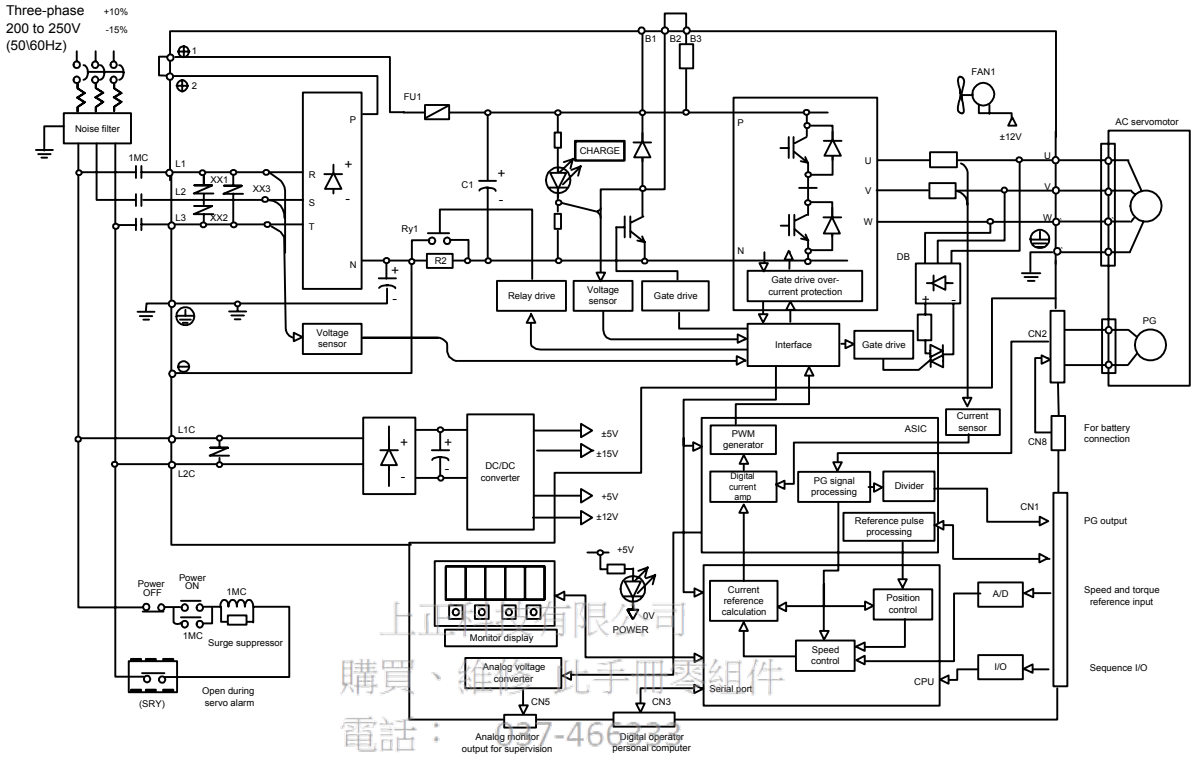

上正電子有限公司
購買、維修此手冊零組件
電話： 527-46633
Email: service@repairtw.com
Line id: @zzzz
www.repairtw.com

3.4 SERVOPACK Power Supply Capacities and Power Losses

The following table shows SERVOPACK power supply capacities and power losses at the rated output.

Table 3.1 SERVOPACK Power Losses at Rated Output

Main Circuit Power Supply	Maximum Applicable Servomotor Capacity kW	SERVOPACK Model SGDS-	Power Supply Capacity kW	Output Current (Effective Value) A	Main Circuit Power Loss W	Regenerative Resistor Power Loss W	Control Circuit Power Loss W	Total Power Loss W
Single-phase 100 V	0.05	A5F	0.25	0.66	5.2	–*1	13	18.2
	0.10	01F	0.40	0.91	12			25
	0.20	02F	0.60	2.1	16.4			29.4
	0.40	04F	1.2	2.8	24			37
Single-phase 200 V	0.05	A5A	0.25	0.66	4.6			17.6
	0.10	01A	0.40	0.91	6.7			19.7
	0.20	02A	0.75	2.1	13.3			26.3
	0.40	04A	1.2	2.8	20			33
	0.75	08A	2.2	5.5	47	12*2	15	74
Three-phase 200 V	1.0	10A	2.3	7.6	55	12*2		82
	2.0	20A	4.3	11.6	92	14*2		121
	3.0	30A	5.9	18.5	120	28*2		163

上正科技有限公司
購買、維修、出手冊零組件
電話： 037 466 555
Email: service@repairtw.com
Line id: @zzzz
www.repairtw.com

* 1. SERVOPACKs with a capacity of 50 to 400 W do not have built-in regenerative resistors. If the regenerative energy exceeds the specified value, connect an external regenerative resistor. Refer to *11.1.3 Calculating the Required Capacity of Regenerative Resistors.*
* 2. Regenerative resistor power losses are allowable losses. Take the following action if this value is exceeded.
  - Remove the lead from the internal regenerative resistor in the SERVOPACK.
  - Install an external regenerative resistor.

Note: External regenerative resistors are optional. Refer to *5.7 Connecting Regenerative Resistors* and *4.4.3 External Regenerative Resistor* for details.

3.5 SERVOPACK Overload Characteristics and Load Moment of Inertia

3.5.1 Overload Characteristics

The overload detection level is set under hot start conditions at a servomotor ambient temperature of 40°C (104°F).

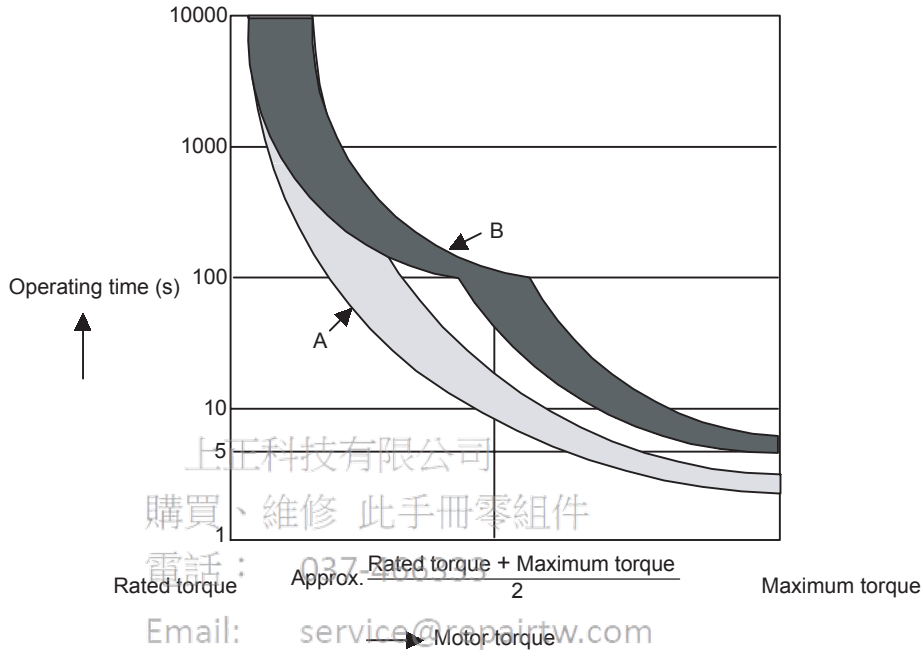

上正科技有限公司
購買、維修 此手冊零組件
電話： 037-400333
Email: service@repairtw.com
Line Id: @2222
www.repairtw.com

Note: The overload protection characteristics of A and B in the figure are applicable when the SERVOPACK is combined with one of the following servomotors.
A: SGMAH or SGMPH servomotor with a capacity of 400 W max.
B: Others like the SGMAH, SGMPH, and SGMSH servomotors

3.5.2 Starting and Stopping Time

The motor starting time (tr) and stopping time (tf) under a constant load are calculated using the following formulas. Motor viscous torque and friction torque are ignored.

Starting time: $$tr = \frac{2\pi \cdot N_M (J_M + J_L)}{60 \cdot (T_{PM} - T_L)} [s]$$

Stopping time: $$tf = \frac{2\pi \cdot N_M (J_M + J_L)}{60 \cdot (T_{PM} + T_L)} [s]$$

N_M: Motor speed (RPM)

J_M: Motor rotor moment of inertia (kg·m^2)

J_L: Load converted to shaft moment of inertia (kg·m^2)

T_{PM}: Instantaneous peak motor torque when combined with a SERVOPACK (N·m)

T_L: Load torque (N·m)

Calculate the torque from the motor current using servomotor torque constant × motor current (effective value).

The following figure shows the motor torque and motor speed timing chart.

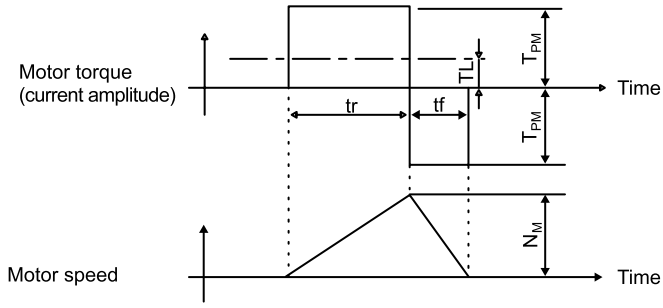

3.5.3 Load Moment of Inertia

The size of the load moment of inertia (J_L) allowable when using a servomotor depends on motor capacity and is limited to within 5 to 30 times the moment of inertia of each servomotor (J_M). This value is provided strictly as a guideline and results may vary depending on servomotor drive conditions.

An overvoltage alarm is likely to occur during deceleration if the load moment of inertia exceeds the allowable load moment of inertia. SERVOPACKs with a built-in regenerative resistor may generate a regeneration overload alarm. Take one of the following steps if this occurs.

- Reduce the torque limit.
- Reduce the deceleration rate.
- Reduce the maximum motor speed.
- Install an externally mounted regenerative resistor if the alarm cannot be cleared. Contact your Yaskawa Application Engineering Department.

上達科技有限公司
購買、維修 此手冊零組件
電話： 037-466333
Email: service@repairtw.com
Line id: @3333
www.repairtw.com

Regenerative resistors are not built into 200 V SERVOPACKs for 50 W to 400 W or 100 V SERVOPACKs for 50 W to 400 W. The following figures show the tentative relationship between the load moment of inertia and motor speed using an example with a load moment of inertia 10 to 30 times the load moment of inertia at the motor shaft.

External regenerative resistors are required when this condition is exceeded or if the allowable loss capacity (W) of the built-in regenerative resistor is exceeded due to regenerative drive conditions when a regenerative resistor is already built in.

(1) Load Moment of Inertia and Motor Speed for SGMAH Servomotors

(a) 200V

SGMAH - A3□

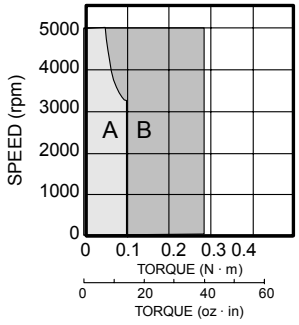

SGMAH - A5□

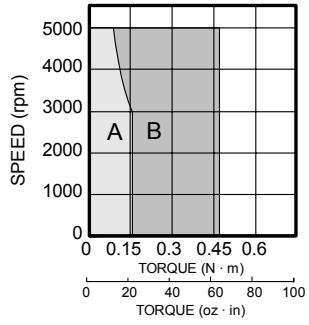

SGMAH - O1□

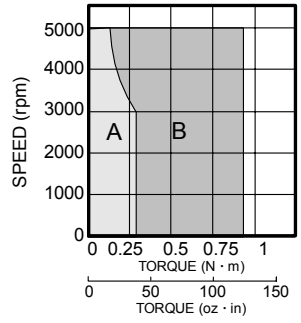

SGMAH - O2□

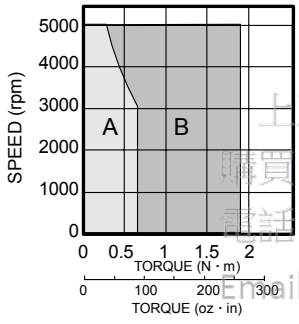

SGMAH - O4□

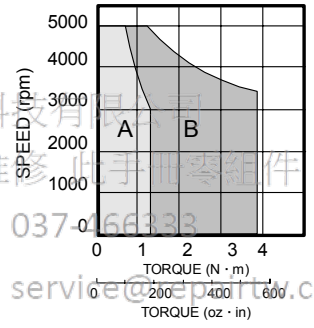

SGMAH - O8□

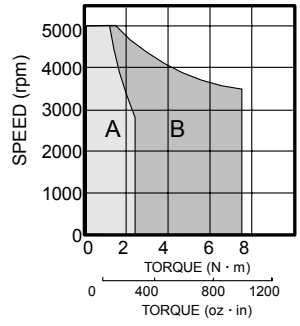

上正科技有限公司
購買、維修 此手冊零組件
電話： 037-466333
Email: service@repairtw.com
Line id: @zzzz
www.repairtw.com

(2) Load Moment of Inertia and Motor Speed for SGMPH Servomotors

(a) 200V

SGMPH - 01□

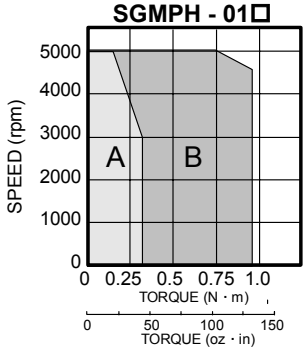

SGMPH - 02□

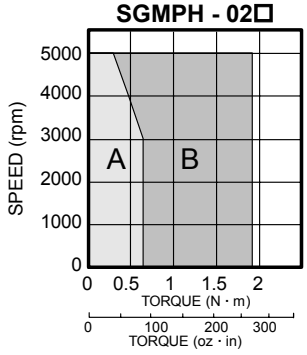

SGMPH - 04□

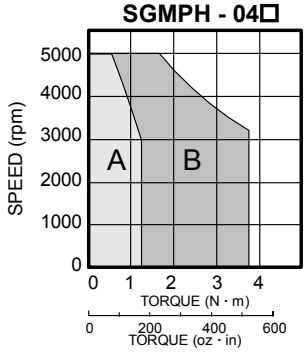

SGMPH - 08□

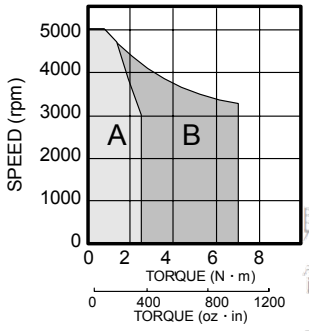

SGMPH - 15□

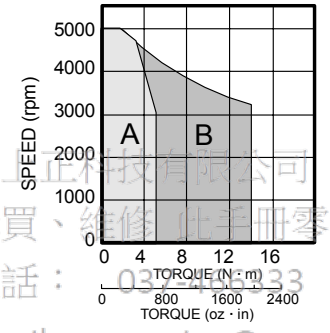

上正科技有限公司
購買、維修、此手冊零組件
電話： 03-4112633
Email: service@repairtw.com
Line Id: @zzzz
www.repairtw.com

(3) Load Moment of Inertia and Motor Speed for SGMGH Servomotors

(a) 200V

SGMGH-05A□A

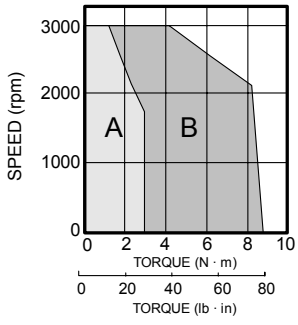

SGMGH-09A□A

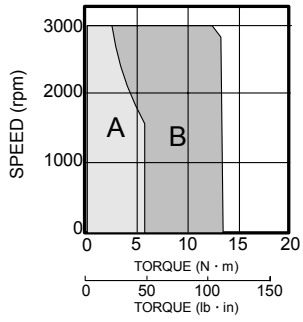

SGMGH-13A□A

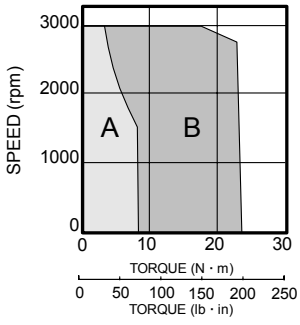

SGMGH-20A□A

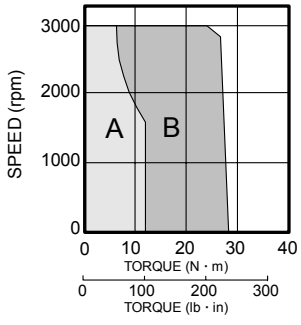

SGMGH-30A□A

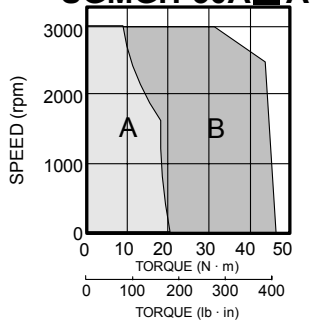

(4) Load Moment of Inertia and Motor Speed for SGMSH Servomotors

(a) 200V

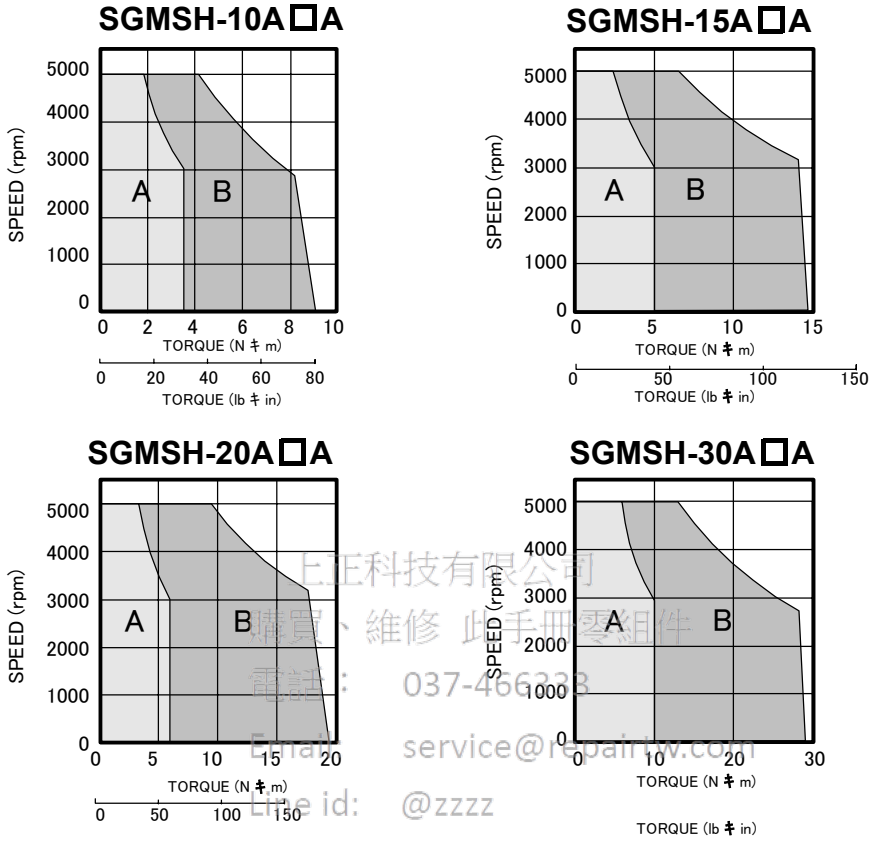

上正科技有限公司
購買、維修 此手冊零組件
電話： 037-466333
Email: service@repairtw.com
Line id: @zzzz
www.repairtw.com

(5) Load Moment of Inertia and Motor Speed for SGMCS Servomotors

SGMCS-02B(42W)

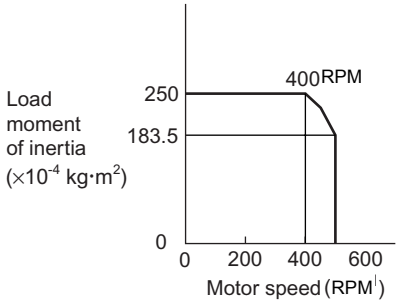

SGMCS-05B(105W)

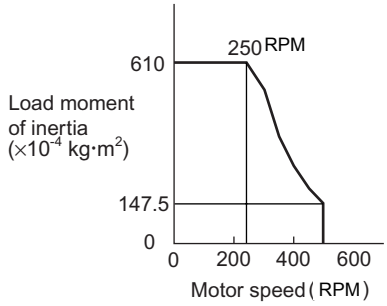

SGMCS-07B(147W)

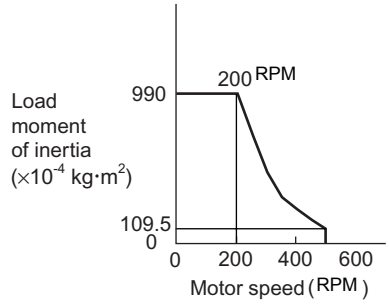

SGMCS-04C(84W)

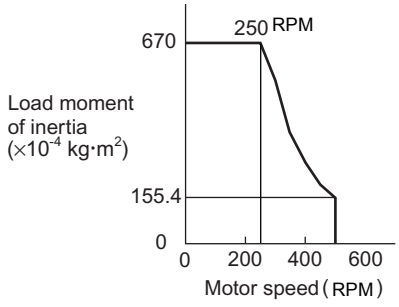

SGMCS-10C(209W)

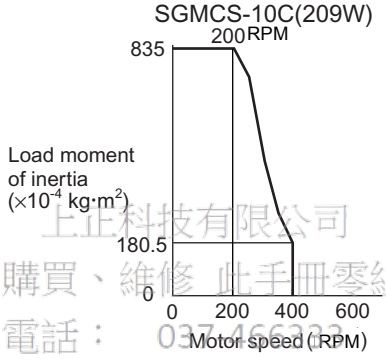

SGMCS-14C(293W)

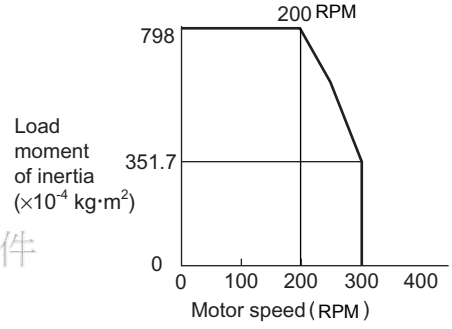

上正科技有限公司
購買、維修 此手冊零組件
電話： 037-466333
Email: service@repairtw.com
Line id: @zzzz
www.repairtw.com

SGMCS-08C(168W)

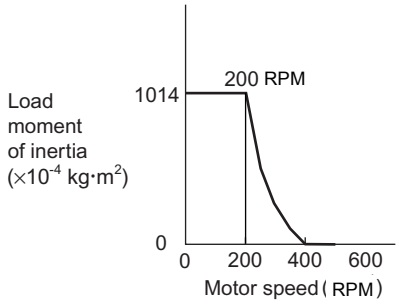

SGMCS-17D(356W)

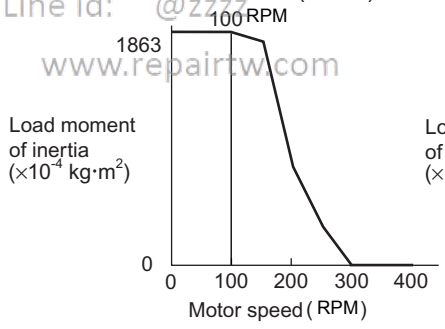

SGMCS-25D(393W)

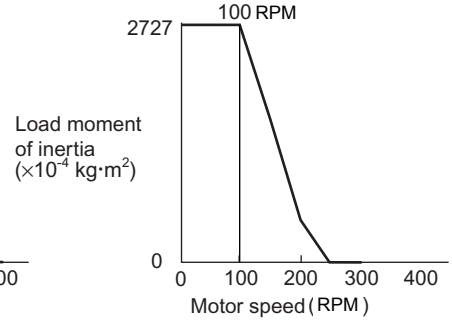

SGMCS-16E(335W)

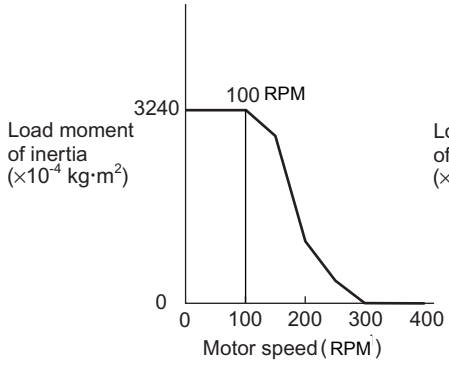

SGMCS-35E(550W)

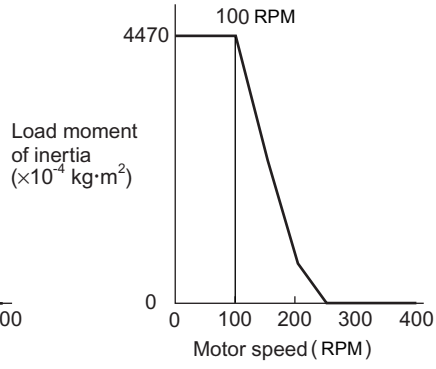

(6) Allowable Load Moment of Inertia at the Motor Shaft

The rotor moment of inertia ratio is the value for a servomotor without a gear and a brake.

Servomotor Model	Capacity Range	Allowable Load Moment of Inertia (Rotor Moment of Inertia Ratio)
SGMAH (200 V)	50 W to 200 W	× 30
	400 W to 750 W	× 20
SGMPH (200 V)	100 W	× 25
	200 W	× 15
	400 W	× 7
	750 W	× 5
SGMSH (200 V)	1.0 kW	× 5
	1.5kW	× 5
	2.0kW	× 5
	3.0kW	× 5
SGMGH (200V)	0.5kW	× 5
	0.9kW	× 5
	1.3kW	× 5
	2.0kW	× 5
	3.0kW	× 5

正正科技有限公司
購買、維修 此手冊零組件
電話：05/2408399
Email: service@repairtw.com
Line id: @zzzz
www.repairtw.com

Servomotor Model	Rated Output (N·m)	Allowable Load Moment of Inertia (Rotor Moment of Inertia Ratio)
SGMCS (200 V)	2.0, 4.0, 5.0, 7.0	× 10
	10.0	× 5
	8.0, 14.0, 17.0, 25.0, 35.0	× 3

3.6 SERVOPACK Dimensional Drawings

SERVOPACK dimensional drawings are grouped according to the mounting method and capacity.

(1) Base-mounted Type

Supply Voltage		Capacity	Reference Section
Single-phase	100 V	50 W / 100 W / 200 W	3.7.1
		400 W	3.7.2
	200 V	50 W / 100 W / 200 W	3.7.1
		400 W	3.7.3
		800 W	3.7.4
Three-phase	200 V	1.0 kW, 1.5kW, 2.0kW, 3.0kW	3.7.4

上正科技有限公司
購買、維修 此手冊零組件
電話： 037-466333
Email: service@repairtw.com
Line id: @zzzz
www.repairtw.com

3.7 Dimensional Drawings of Base-mounted SERVOPACK Model SGDS-□□□12A / -□□□12A

3.7.1 Single-phase 100 V/200 V, 50 W/100 W/200 W

Approx.mass: 0.7 kg Unit: mm

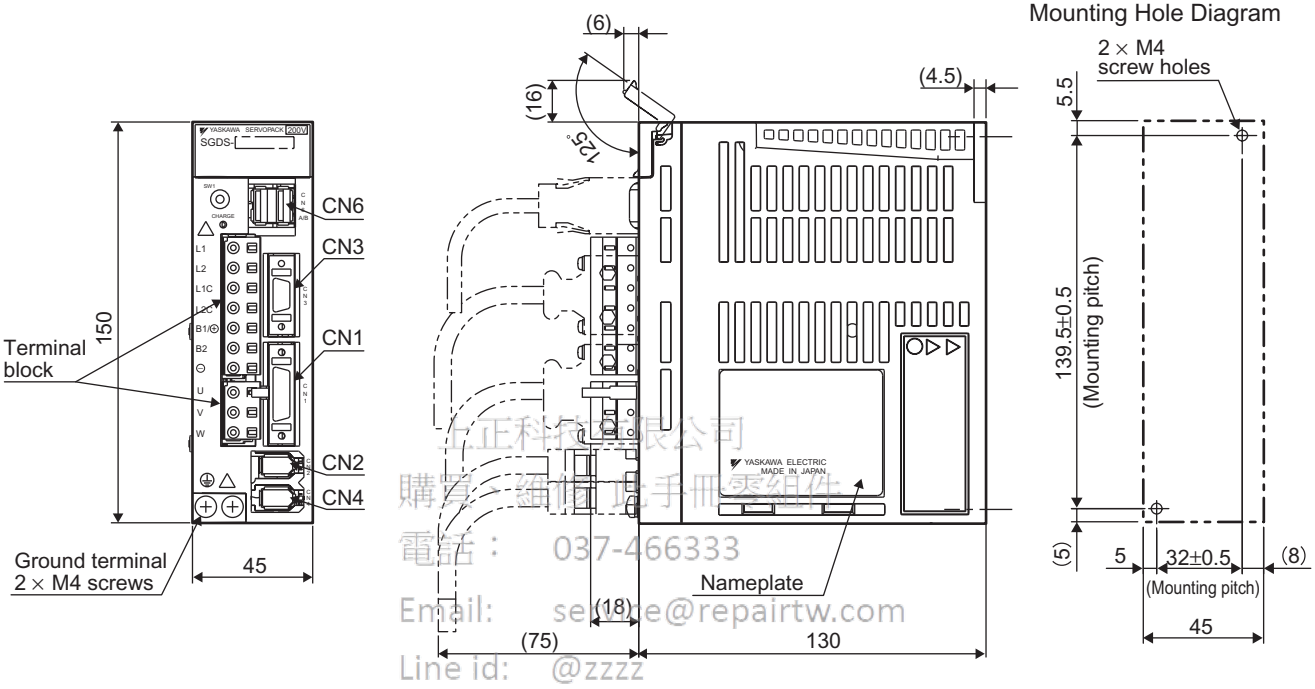

台正科技有限公司
購買、維修、手冊、零組件
電話： 037-466333
Email: service@repairtw.com
Line id: @zzzz
www.repairtw.com

3.7.2 Single-phase 100 V, 400 W

Approx.mass: 1.4 kg Unit: mm

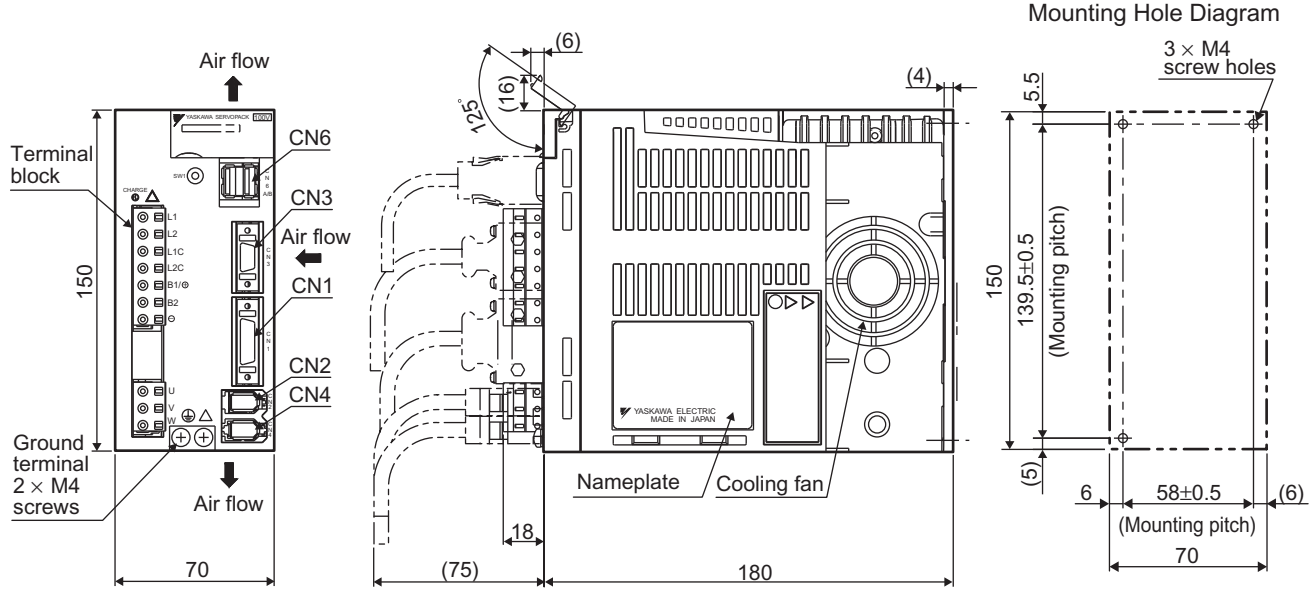

3.7.3 Single-phase 200 V, 400 W

Approx.mass: 0.9 kg Unit: mm

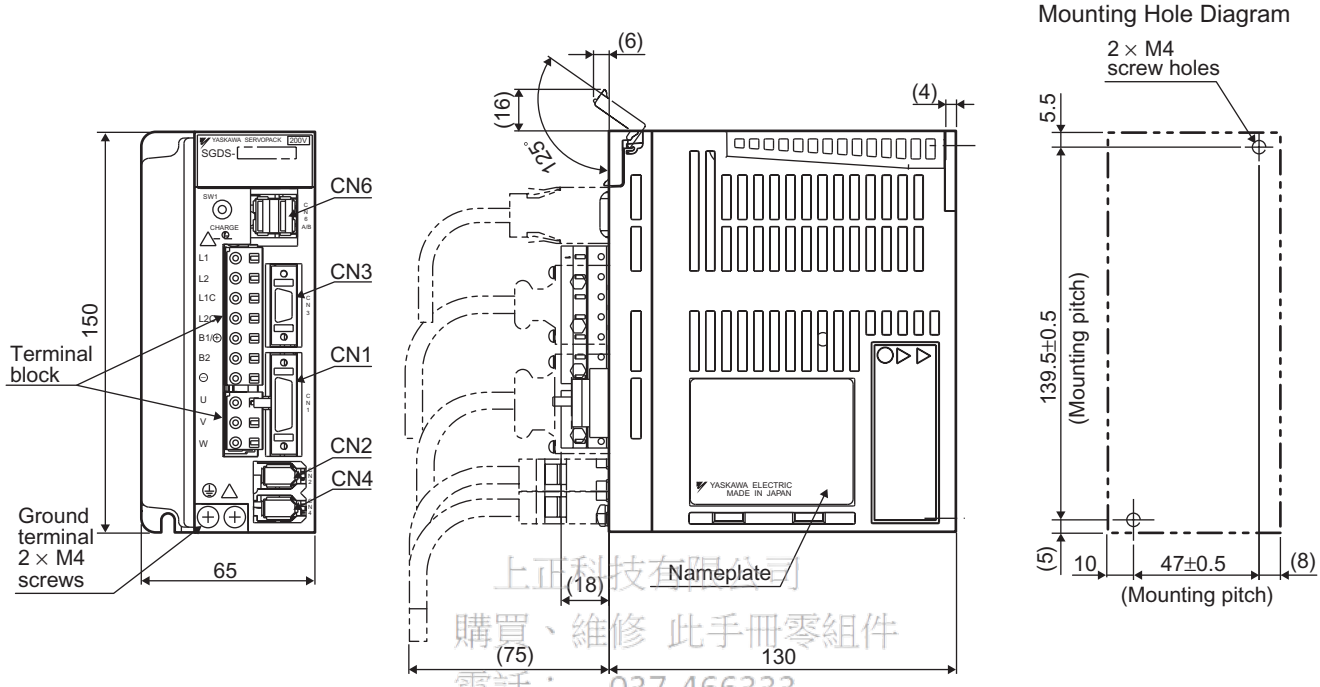

上正科技有限公司
購買、維修 此手冊零組件
電話： 037-466333
Email: service@repairtw.com
Line id: @zzzz
www.repairtw.com

3.7.4 Single-phase 200 V, 800 W, Three-phase 200 V, 1.0 kW

Approx.mass: 1.4 kg Unit: mm

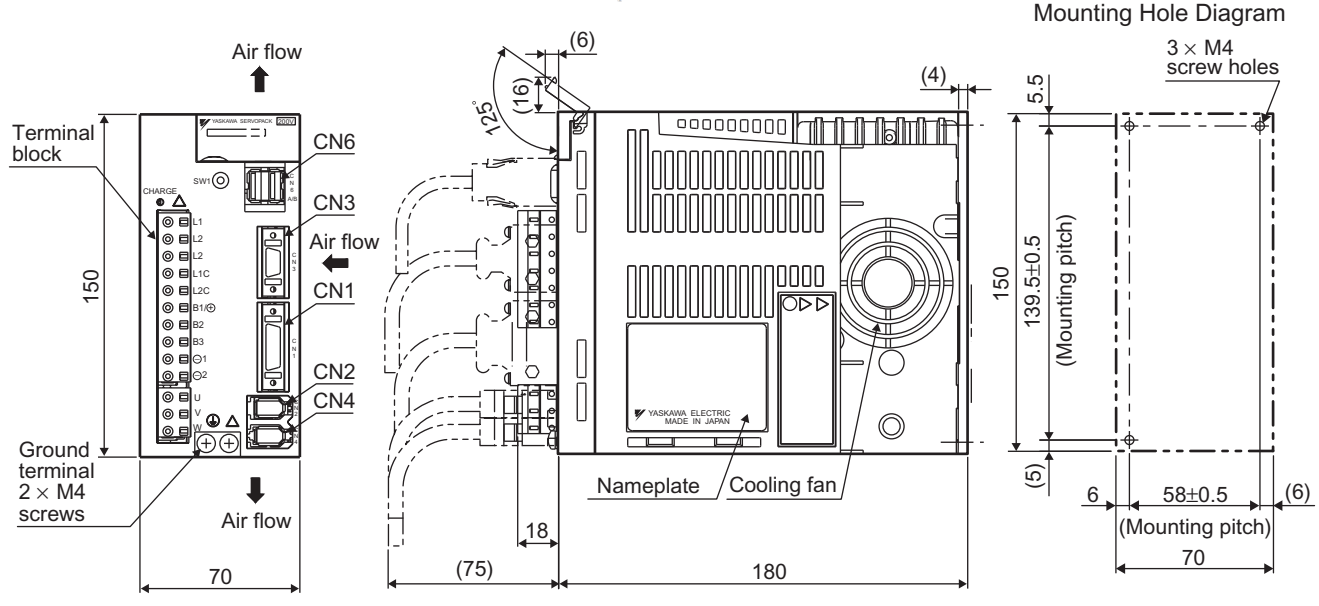

Three-phase, 1.5kW

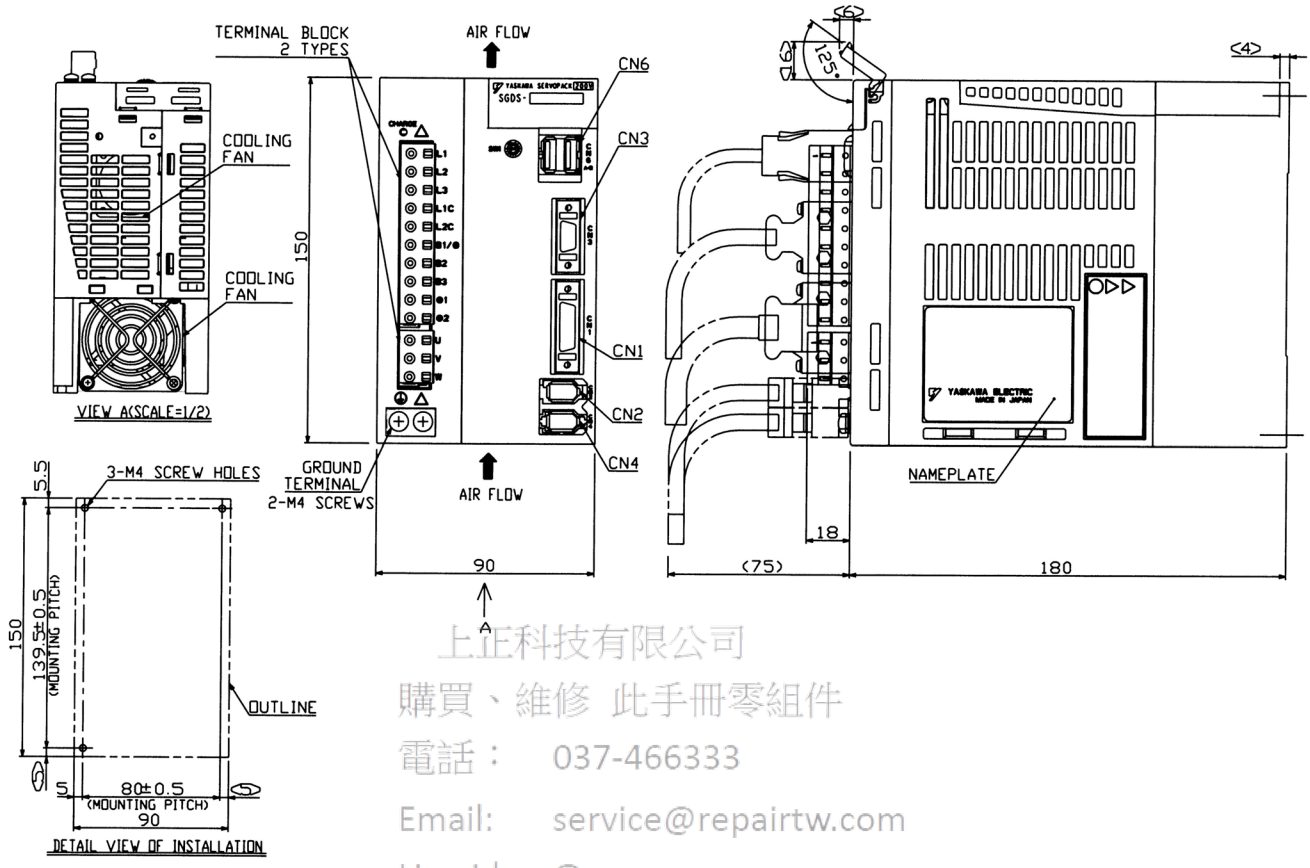

上正科技有限公司
購買、維修 此手冊零組件
電話： 037-466333
Email: service@repairtw.com
Line id: @zzzz
www.repairtw.com

Three-phase, 2.0kW, 3.0kW

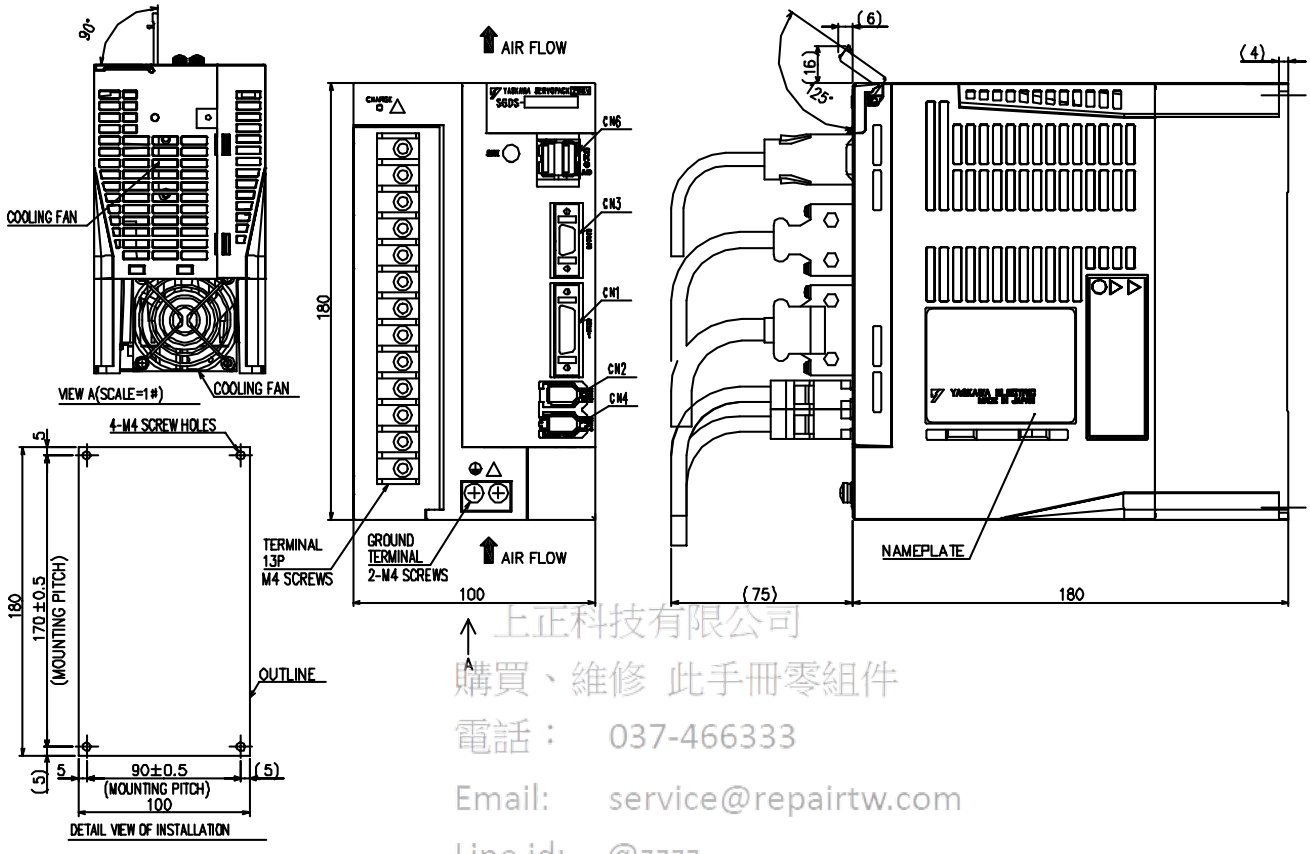

上正科技有限公司
購買、維修 此手冊零組件
電話： 037-466333
Email: service@repairtw.com
Line id: @zzzz
www.repairtw.com

4

Specifications and Dimensional Drawings of Cables and Peripheral Devices

4.1 SERVOPACK Main Circuit Wire Size - - - - - - - - - - - - - - - - - 4-2

4.2 Connectors for Main Circuit, Control Power Supply, and Servomotor Cable - 4-4

4.2.1 Spring Type (Standard) - 4-4

4.2.2 Crimp Type (Option) - 4-5

4.3 CN1 Cables for I/O Signals - 4-7

4.3.1 Connector Type and Cable Size - 4-7

4.4 Peripheral Devices - 4-8

4.4.1 Digital Operator - 4-8

4.4.2 Cables for Analog Monitor - 4-8

4.4.3 External Regenerative Resistor - 4-9

4.4.4 Absolute Encoder Battery - 4-11

4.4.5 Molded-case Circuit braker (MCCB) - 4-12

4.4.6 Noise Filter - 4-13

4.4.7 Magnetic Contactor - 4-16

4.4.8 Surge Protector - 4-17

4.4.10 AC/DC Reactors for Power Supplied Designed for Minimum Harmonics - 4-19

4.4.10 MECHATROLINK/MECHATROLINK II Communication Cable - - - - 4-19

4.4.11 MECHATROLINK/MECHATROLINK II Terminator - - - - - - - - - - - - - 4-19

4.4.12 Cable with Connectors at both ends for Fully-closed Control - - - - - 4-20

4.4.13 Serial Converter Unit for Fully-closed Control - - - - - - - - - - - - - - - 4-20

購買、維修 此手冊零組件
電話： 037-466333
Email: service@repairtw.com
Line id: @zzzz
www.repairtw.com

4.1 SERVOPACK Main Circuit Wire Size

(1) Cable Types

Cable Types		Allowable Conductor Temperature °C
Symbol	Name	
PVC	Normal vinyl cable	-
IV	600-V vinyl cable	60
HIV	Temperature-resistant vinyl cable	75

The table shows the wire size and allowable currency for three cables. Use a cable whose specifications meet or are less than the values in the table.

- 600 V Heat-resistant Vinyl Cable (HIV)

AWG size	Nominal Cross Section Diameter (mm^2)	Configuration (number of wires/mm^2)	Conductive Resistance (Ω/km)	Allowable Currency at Ambient Temperatures (A)		
				30°C (86° F)	40°C (104 °F)	50°C (122° F)
20	0.5	19/0.18	39.5	6.6	5.6	4.5
-	0.75	30/0.18	26.0	8.8	7.0	5.5
18	0.9	37/0.18	24.4	9.0	7.7	6.0
16	1.25	50/0.18	15.6	12.0	11.0	8.5
14	2.0	7/0.6	9.53	23	20	16
12	3.5	7/0.8	5.41	33	29	24
10	5.5	7/1.0	3.47	43	38	31
8	8.0	7/1.2	2.41	55	49	40
6	14.0	7/1.6	1.35	79	70	57

Note: The values in the table are only for reference.

全球科技有限公司
購買維修 進口冊零組件
電話: 037-496333
Email: service@repairtw.com
Line ID: @zzzz
www.repairtw.com

(2) Single-phase for 100 V

External Terminal Name	Terminal Symbol	SERVOPACK Model SGDS-		
		A5F	01F	02F
Main circuit power input terminals	L1, L2	HIV1.25		HIV2.0
Servomotor connection terminals	U, V,W	HIV1.25		
Control power input terminals	L1C, L2C	HIV1.25		
External regenerative resistor connection terminals	B1/⊕, B2	HIV1.25		
Ground terminal	⏚	HIV2.0 min.		

(3) Single-phase for 200 V

External Terminal Name	Terminal Symbol	SERVOPACK Model SGDS-				
		A5A	01A	02A	04A	08A
Main circuit power input terminals	L1, L2	HIV1.25			HIV2.0	
Servomotor connection terminals	U, V, W	HIV1.25				
Control power input terminals	L1C, L2C	HIV1.25				
External regenerative resistor connection terminal	B1/⊕, B2	HIV1.25				
Ground terminal	⏚	HIV2.0 min.				

(4) Three-phase for 200 V

External Terminal Name	Terminal Symbol	SERVOPACK Model SGDS-			
		10AE	1.5AE	2.0AE	3.0AE
Main circuit power input terminals	L1, L2, L3	HIV2.0			
Servomotor connection terminals	U, V, W	HIV2.0			
Control power input terminals	L1C, L2C	HIV1.25			
External regenerative resistor connection terminals	B1/⊕, B2	HIV2.0			
Ground terminal	⏚	HIV2.0 min.			

Note: 1. Wire sizes were selected for three cables per bundle at 40°C ambient temperature with the rated current.
2. Use cable with withstand voltage of 600 V for main circuits.
3. If cables are bundled in PVC or metal ducts, consider the reduction ratio of the allowable current.
4. Use heat-resistant cable under high ambient or panel temperatures where normal vinyl cable will rapidly deteriorate.
5. Use cable within the allowable moment of inertia.
6. Do not use in continuous regenerating status.

上正科技有限公司
購買、維修 此手冊零組件
電話： 037-466333
Email: service@repairtw.com
Line id: @zzzz
www.repairtw.com

4.2 Connectors for Main Circuit, Control Power Supply, and Servomotor Cable

4.2.1 Spring Type (Standard)

Spring-type connectors are provided on SERVOPACK as standard.

(1) Connector Types

Appearance	Type	Manufacturer
3-pole (For servomotor main circuit cable connector at SERVOPACK end)	51446-0301	Molex Japan Co., Ltd.
7-pole (For 50 to 400 W SERVOPACKs)	51446-0701	
10-pole (For 1.0 kW SERVOPACKs)	51446-1001	
Connection lever	54932-0000	

(2) External View and Dimensions

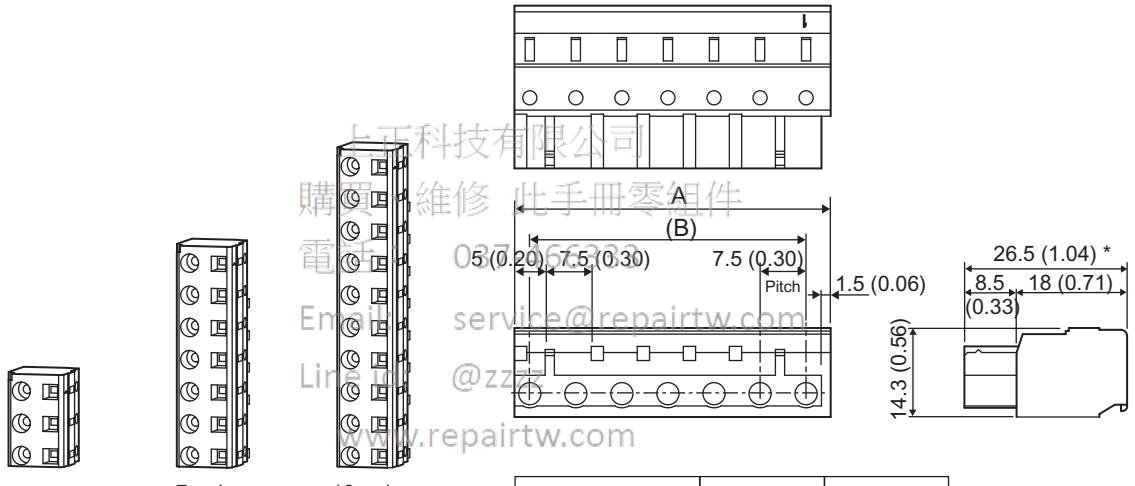

上正科技有限公司
購買 維修 此手冊零組件
電話: 037-66333
Email: service@repairtw.com
Line ID: @zz77
www.repairtw.com

The number of Poles	Dimension A	Dimension B
3	21.5 (0.85)	15 (0.59)
7	51.5 (2.03)	45 (1.77)
10	74 (2.91)	67.5 (2.66)

* Reference length
Units: mm (in)

(3) Connection Lever

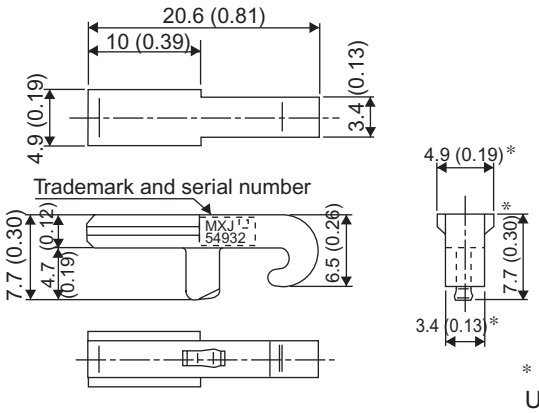

* Reference length
Units: mm (in)

4.2.2 Crimp Type (Option)

The crimp type connectors are options. Contact the manufacturer for details.

(1) Connector Types

Appearance	Types	Manufacturer
3-pole (For servomotor main circuit cable connector at SERVOPACK end)	51241-0311	Molex Japan Co., Ltd.
7-pole (For 50 to 400 W SERVOPACKs)	51241-0711	
10-pole (For 0.5 to 1.0 kW SERVOPACKs)	51241-1011	
Plug (chained)	56125-0018	
Plug (detached)	56125-0118	
Manual tool	57349-5300	
Pull tool	57349-6000	

(2) External View and Dimensions

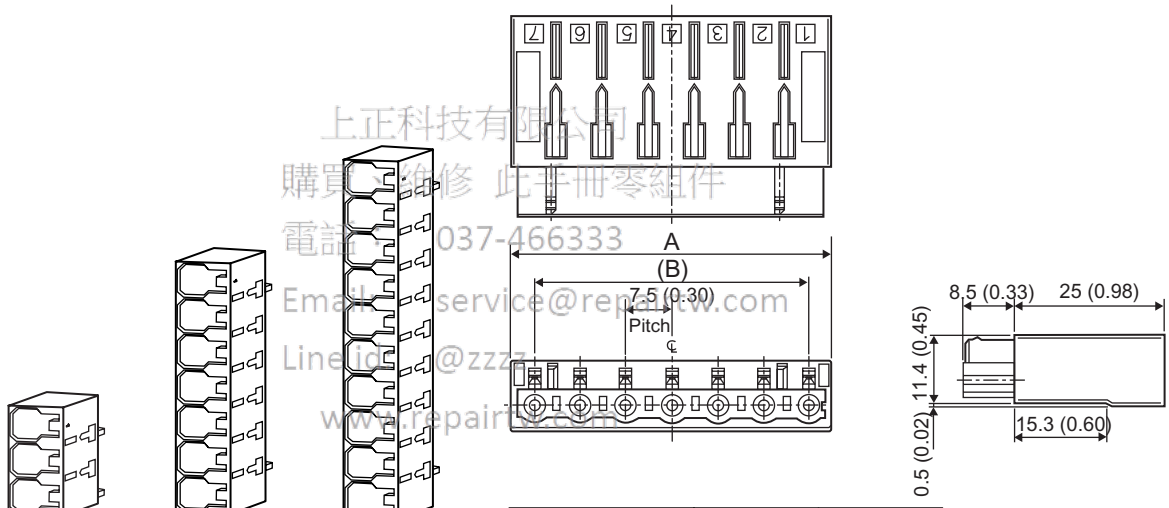

上正科技有限公司
購買 維修 此手冊零組件
電話 037-466333
Email service@repair.tw.com
Line id @zzzz
www.repair.tw.com

The number of Poles	Dimension A	Dimension B
3	22.8 (0.90)	15 (0.59)
7	52.8 (2.08)	45 (1.77)
10	75.3 (2.96)	67.5 (2.66)

Units: mm (in)

(3) Plugs (Chained/Detached)

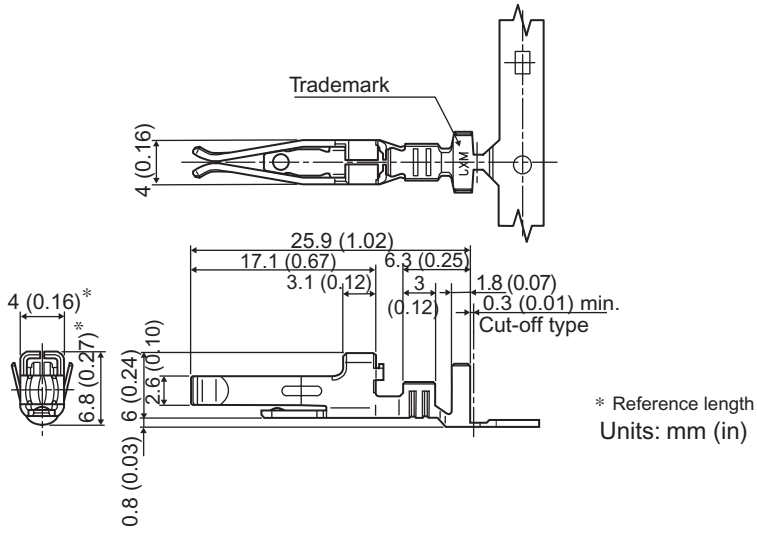

上正科技有限公司
購買、維修 此手冊零組件
電話： 037-466333
Email: service@repairtw.com
Line id: @zzzz
www.repairtw.com

4.3 CN1 Cables for I/O Signals

4.3.1 Connector Type and Cable Size

Use the following connector and wire for CN1. The connector CN1 includes a set of case and a connector.

Connector Type	Case		Connector	
	Type	Qty	Type	Qty
DE9411354	10326-52A0-008*	1 set	10126-3000VE* (Soldered)	1

* Manufactured by Sumitomo 3M Ltd.

(1) Dimensional Drawings of Case

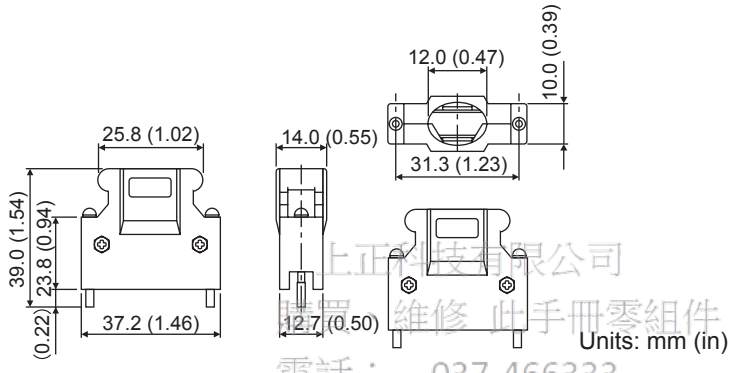

上正科技有限公司
購買 維修 此手冊零組件
電話： 037-466333
Email: service@repairtw.com
Line id: @rrzz
www.repairtw.com

(2) Cable Size

Item	Specifications
Cable	Use twisted-pair or twisted-pair shielded wire.
Applicable wires	AWG24, 26, 28, 30
Cable Finished Diameter	ϕ16 mm (0.63 in) max.

4.4 Peripheral Devices

4.4.1 Digital Operator

(1) Model JUSP-OP05A with a 1m-connection Cable

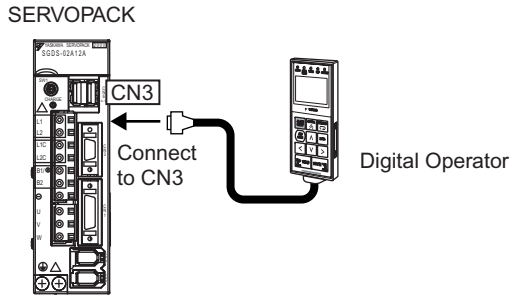

(2) Dimensional Drawings

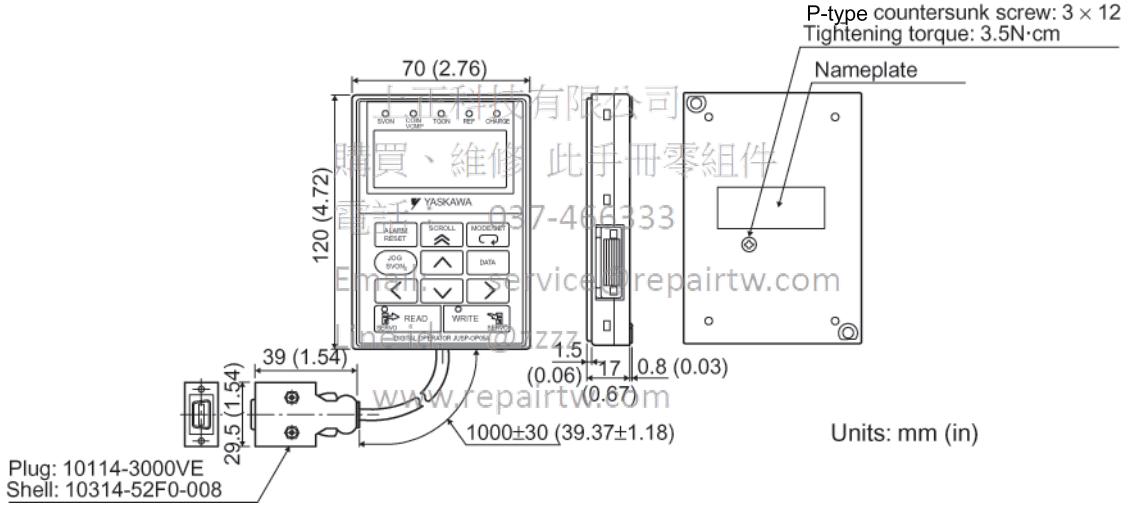

上元科技有限公司
購買、維修 此手冊零組件
電話: 037-466333
Email: service@repairtw.com
Line id: @zzz
www.repairtw.com

4.4.2 Cables for Analog Monitor

(1) Cable Type: DE9404559

Connect the specified cables to CN5 connector for monitoring the analog monitor signals. For the details, refer to *8.7 Analog Monitor*.

With the front cover open

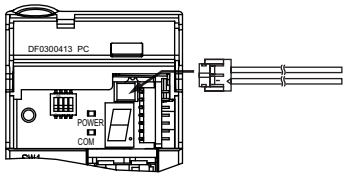

(2) Dimensional Drawings

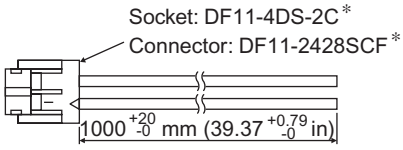

∗ Hirose Electric Corporation.

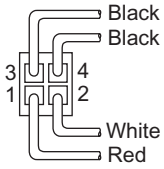

Viewed from the cable

(3) Specifications

Pin Number	Cable Color	Signal Name	Factory Setting
1	Red	Analog Monitor 2	Motor speed: 1 V / 1000 RPM
2	White	Analog Monitor 1	Torque reference: 1 V / 100% rated torque
3, 4	Black (2 cables)	GND (0 V)	-

Note: The examples shown in the table are factory settings. To chang the settings, reset parameters Pn006 and Pn007. Refer to *8.7 Analog Monitor.*

4.4.3 External Regenerative Resistor

上正科技有限公司
購買、維修此手冊零組件
電話: 0371166332
Email: service@repairtw.com
Line id: @zzzz
www.repairtw.com

When regenerative energy is so large that a SERVOPACK cannot process, install externally a regenerative resistor. The regenerative resistor must be purchased by customers. Refer to the table below for selecting the regenerative resistor. Refer to *5.7 Connecting Regenerative Resistors* for the connection.

(1) References for External Regenerative Resistor

Regenerative Resistor Model	Specifications	Manufacturer
RH120	70 W, 1 to 100 Ω	Iwaki Wireless Research Institute
RH150	90 W, 1 to 100 Ω	
RH220	120 W, 1 to 100 Ω	
RH300C	200 W, 1 to 10 kΩ	
RH500	300 W, 1 to 30 Ω	

(2) Model Designation

RH120 (N) 10Ω J

Model
N: Noninductive winding

Resistance

Tolerance	
Code	Tolerance
K	±10%
J	±5%
H	±3%

(3) Specifications

Resistance Tolerance	K: ± 10%, J: ± 5%, H: ± 3%
Temperature Resistance Characteristics	± 400 PPM / °C (20Ω max.) , ± 260 PPM / °C (20Ω min.)
Withstand Voltage	2000 VAC/min. ΔR: ± (0.1% + 0.05Ω)
Insulation Resistance	500 VDC, 20 MΩ minimum
Short-time Overload	When 10 times of rated power is applied for five seconds, ΔR: ±(2% + 0.05Ω)
Life	1000 hours of repeating the operation ON for 90 minutes and OFF for 30 minutes, ΔR: ±(5% + 0.05Ω)
Heat Resistance	No ignitionafter 10 times ratedpower applied for one minute
Operating temperature	-25 to 150°C (-13 to 302 °F)

(4) Dimensional Drawings

RH120/150/220

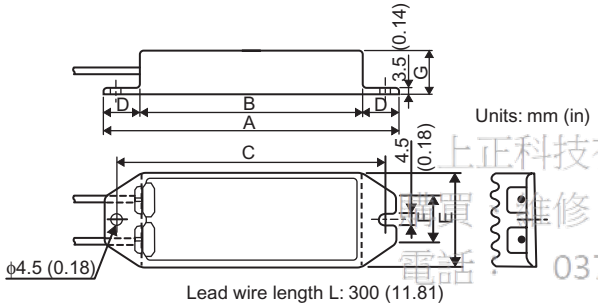

Units: mm (in)

Lead wire length L: 300 (11.81)

Model	Rated Power	Resistance
RH120	70W	1 Ω to 100 Ω
RH150	90W	1 Ω to 100 Ω
RH220	120W	1 Ω to 100 Ω

Dimensions	A	B	C	D	E	F	G
RH120	182 (7.17)	150 (5.91)	172 (6.77)	16 (0.63)	42 (1.65)	22 (0.87)	20 (0.79)
RH150	212 (8.35)	180 (7.09)	202 (7.95)	16 (0.63)	44 (1.73)	24 (0.94)	30 (1.18)
RH220	230 (9.06)	200 (7.87)	220 (8.66)	15 (0.59)	60 (2.36)	24 (0.94)	20 (0.79)

RH220B

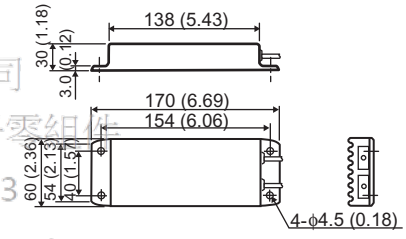

Lead wire length L: 500 (19.69)
Rated power: 120 W
Resistance: 1 Ω to100 Ω

Units: mm (in)

RH300C

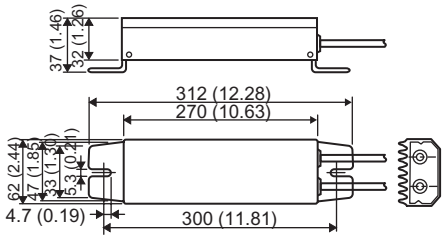

Lead wire length L: 300 (11.81)
Rated power: 200 W
Resistance: 1 Ω to 10kΩ

Units: mm (in)

RH500

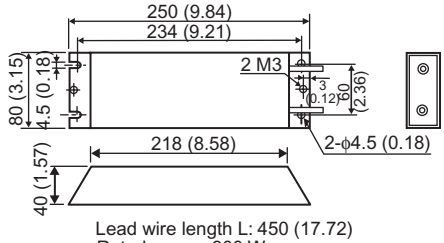

Lead wire length L: 450 (17.72)
Rated power: 300 W
Resistance: 1 Ω to 30 Ω

Units: mm (in)

上正科技有限公司
回收 維修 此手冊零組件
電話：037-466333
Email: service@repairtw.com
http://www.repairtw.com

4.4.4 Absolute Encoder Battery

A backup battery is required to maintain the position of absolute encoder. Install one of the absolute encoder batteries below.

(1) Battery

Model: JZSP-BA01 (lithium battery)

(Battery: ER3V battery made by Toshiba Battery Co., Ltd.)

3.6 V 1000 mAh

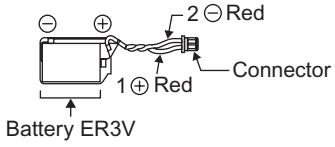

(2) Battery Installed on the Host Controller End

Model: ER6V3 (lithium battery)

3.6 V 2000 mAH

Manufactured by Toshiba Battery Co., Ltd.

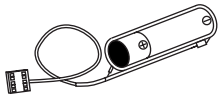

全正科技有限公司
購買、維修 此手冊零組件
電話： 037-466333
Email: service@repairtw.com
Line id: @zzzz
www.repairtw.com

(3) Specification

Location	Specification	Model Number	Manufacturer
Encoder cable	Lithium battery 3.6 V, 1000 mAh	ER3V	Toshiba Battery Co., Ltd.
Host controller	Lithium battery 3.6 V, 2000 mAh	ER6VC3	Toshiba Battery Co., Ltd.

4.4.5 Molded-case Circuit braker (MCCB)

(1) Model: MN50-CP

The above recommended product is manufactured by Mitsubishi Electric Corporation. Refer to the manufacturer's instruction manual for details.

(2) External View

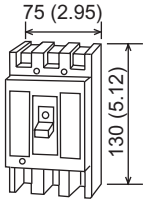

Units: mm (in)

上正科技有限公司
購買、維修 此手冊零組件
電話： 037-466333
Email: service@repairtw.com
Line id: @zzzz
www.repairtw.com

(3) Specifications

Phase		3ϕ3W	
Number of Poles		3	
Rated AC Voltage (V)		Common for AC 100/200/415 VAC	
Rated Current (A) Motor Rated Capacity (kW) Basic Ambient Temperature (40°C)		Rated Current A	kW 200 V
		7.1	1.5
		4	0.75
		2.5	0.4
		1.4	0.2
Rated Current Sensitivity		30 mA (100, 200 or 500 switchable)	
Operating time		Within 0.1 s	
Ground Fault Display Method		Mechanical button	
Rated Interrupt-ing Current JIS C8371	AC415 V	2.5 kA	
	AC200 V	5 kA	
	AC100 V	5 kA	

4.4.6 Noise Filter

The recommended noise filter is manufactured by SCHAFFNER (Schaffner EMC Inc., 52 Mayfield Ave., Edison, NJ 08837, 1-800-367-5566, http://www.shaffner.com. Select one of the following noise filters according to SERVOPACK capacity. For more details on selecting current capacity for a noise filter, refer to *2.5.3 Noise Filters, Magnetic Contactors, Surge Protectors and AC/DC Reactors*.

上正科技有限公司
購買、維修 此手冊零組件
電話： 037-466333
Email: service@repairtw.com
Line id: @zzzz
www.repairtw.com

(1) Single-phase, 100/200 V

Model			FN2070-6/07	FN2070-10/07	FN2070-16/07
Dimensional Drawings			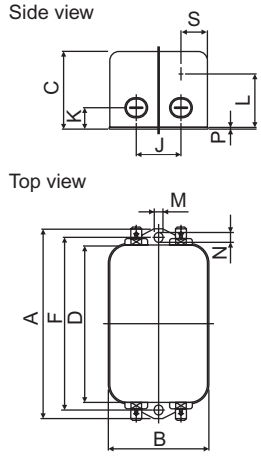		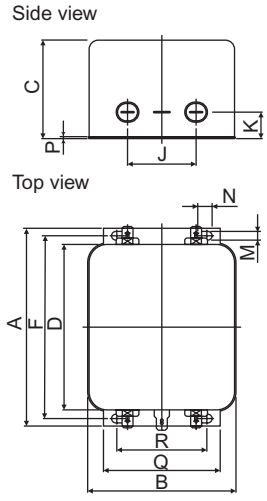
			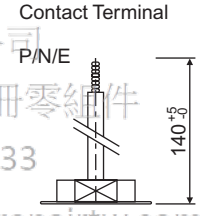		
External Dimensions in mm (in)		Tolerance	Dimensions		
	A	-	113.5±1 (4.47±0.039)	156±1 (6.14±0.039)	119±0.5 (4.69±0.020)
	B	±1 (±0.039)	57.5 (2.26)		85.5 (3.37)
	C	-	45.4±1.2 (1.79±0.047)		57.6±1 (2.27±0.039)
	D	±1 (±0.039)	94 (3.70)	130.5 (5.14)	98.5 (3.88)
	F	±0.3 (±0.012)	103 (4.06)	143 (5.63)	109 (4.29)
	J	±0.2 (±0.0079)	25 (0.98)		40 (1.57)
	K	±0.5 (±0.020)	8.4 (0.33)		8.6 (0.34)
	L	±0.5 (±0.020)	32.4 (1.28)		-
	M	±0.1 (±0.039)	4.4 (0.17)	5.3 (0.21)	4.4 (0.17)
	N	±0.1 (±0.039)	6 (0.24)		7.4 (0.29)
	P	±0.1 (±0.039)	0.9 (0.035)		1.2 (0.047)
	Q	±0.3 (±0.012)	-		66 (2.60)
	R	±0.2 (±0.0079)	-		51 (2.01)
	S	±0.5 (±0.020)	38 (1.50)		-
Specifications			250 VAC, 6 A	250 VAC, 10 A	250 VAC, 16 A
Applicable SERVOPACK SGDS-		Single-phase 100 V	A5F	02F	04F
			01F		
		Single-phase 200 V	A5A	04A	08A
			01A		
			02A		

上正科技有限公司
購買、維修 此手冊零組件
電話： 037-466333
Email: service@repairtw.com
Line id: zzzzz
www.repairtw.com

(2) Three-phase, 200 V

Select one of the following noise filters according to SERVOPACK capacity. For more details on selecting current capacity for a noise filter, refer to *2.5.3 Noise Filters, Magnetic Contactors, Surge Protectors and AC/DC Reactors*.

For connecting the noise filter, refer to *5.1.3 Typical Main Circuit Wiring Examples*.

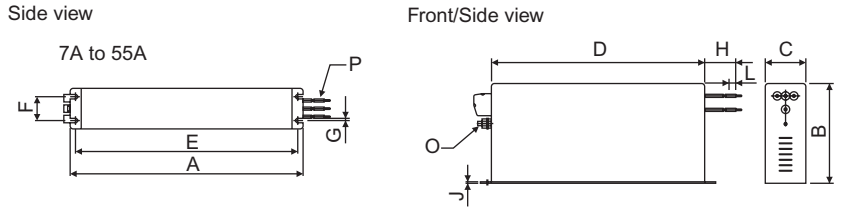

Dimensions in mm (in)		Model	
	Tolerance	FN258L-7/07	FN258L-16/07
A	±1 (±0.039)	255 (10.04)	305 (12.01)
B	-	126±0.8 (4.96±0.031)	142±0.8 (5.59±0.031)
C	±0.6 (±0.024)	50 (1.97)	55 (2.17)
D	-	225±0.8 (8.86±0.031)	275±0.8 (10.83±0.031)
E	±0.5 (±0.020)	240 (9.45)	290 (11.42)
F	±0.3 (±0.012)	25 (0.98)	30 (1.18)
G	±0.2 (±0.0079)	6.5 (0.26)	
H	±10 (±0.39)	300 (11.81)	
J	-	1±0.1 (0.039±0.0039)	
L	±1 (±0.039)	9 (0.35)	
O	-	M5	
P	-	AWG16	AWG14
Specifications		480 VAC, 7 A	480 VAC, 16 A
Applicable	Three-phase 200 V	05A	10A

上正科技有限公司
購買、維修 此手冊零組件
電話：(03)4222933
Email: service@repairtw.com
Line id: @2222
www.repairtw.com

4.4.7 Magnetic Contactor

(1) Model: HI-□J

The magnetic contactor is manufactured by Yaskawa Controls Co., Ltd. Contact your Yaskawa representative for details.

A magnetic contactor is required to make the AC power to SERVOPACK ON/OFF sequence externally. Be sure to attach a surge protector to the excitation coil of the magnetic contactor. Refer to *4.4.8 Surge Protector* for details of the surge protector.

For selecting a magnetic contactor, refer to *2.5.3 Noise Filters, Magnetic Contactors, Surge Protectors and AC/DC Reactors*.

(2) For Single-phase 100/200V and Three-phase 200 V SERVOPACKs

(a) Model: HI-11J and HI-14J

Dimensions in mm (in)	Mounting Hole Dimensions in mm (in)	Terminal Symbols
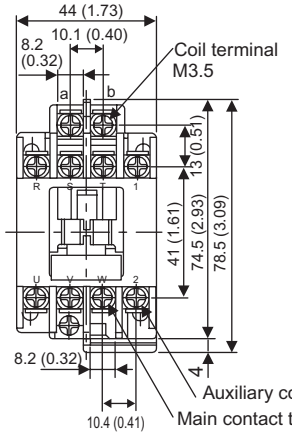 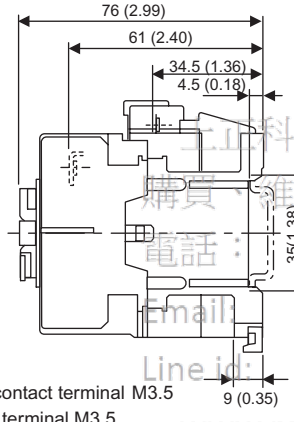	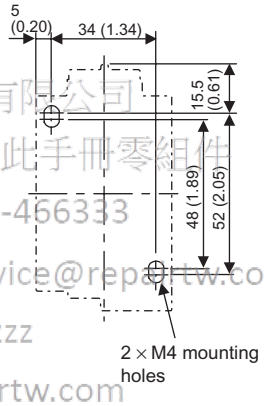	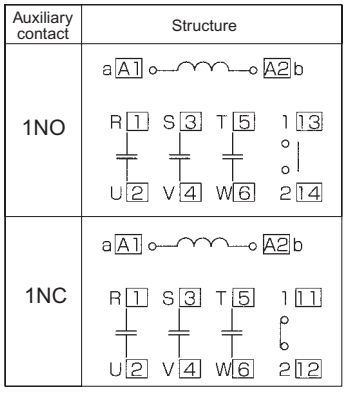

Approx mass: 0.25 kg (0.551 lb)

正正科技有限公司
購買、維修 此手冊零組件
電話：037-466333
Email: service@repairtw.com
Line id: @zzzz
www.repairtw.com

(b) Model: HI-15, HI-18J, and HI-20J

Dimensions in mm (in)	Mounting Hole Dimensions in mm (in)	Terminal Symbols
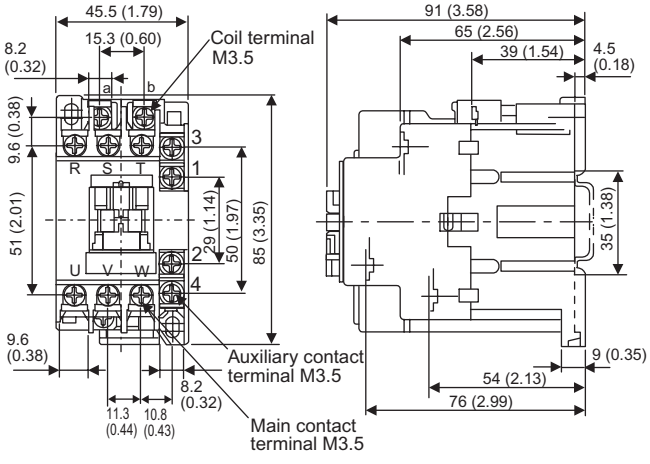	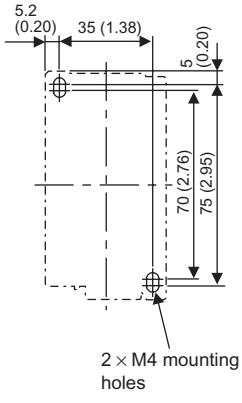	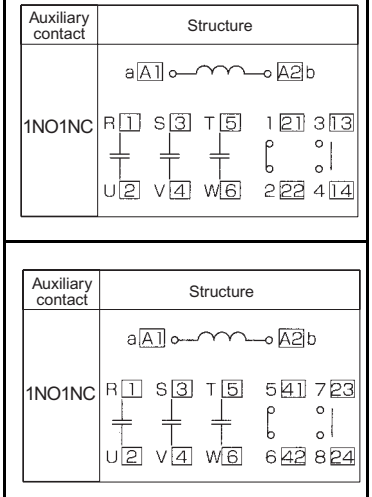

Approx. mass: 0.38 kg (0.838 lb)

4.4.8 Surge Protector

(1) Model: R·C·M-601BQZ-4 and R·C·M-601BUZ-4

Manufactured by Okaya Electric Industries Co., Ltd.

The surge protector absorbs surge voltage generated when the magnetic coil is OFF. This prevents faulty operation in or damage to electronic circuits near the magnetic contactors or switches.

Recommended surge protectors are listed below.

(2) Dimensional Drawings

(a) R·C·M-601BQZ-4

Dimensional Drawings	Internal Connection Diagram
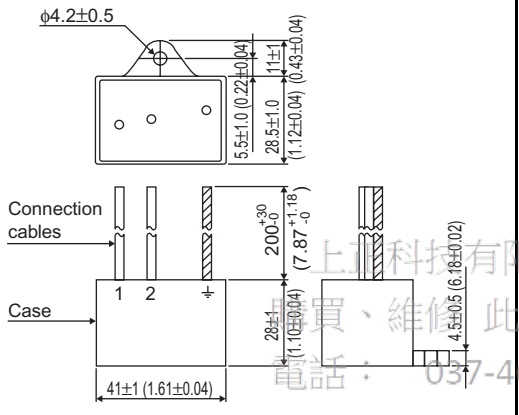	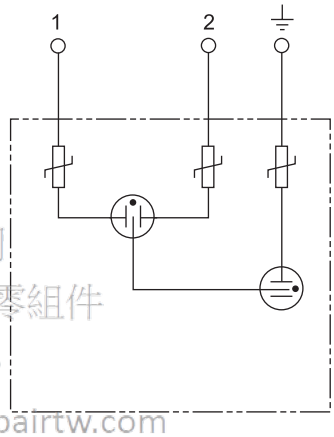

上揚科技有限公司
買賣、維修、此手冊零組件
電話： 037-466333
Email: service@repairtw.com
Line id: @zzzz
www.repairtw.com

(b) R·C·M-601BUZ-4

Dimensional Drawings	Internal Connection Diagram
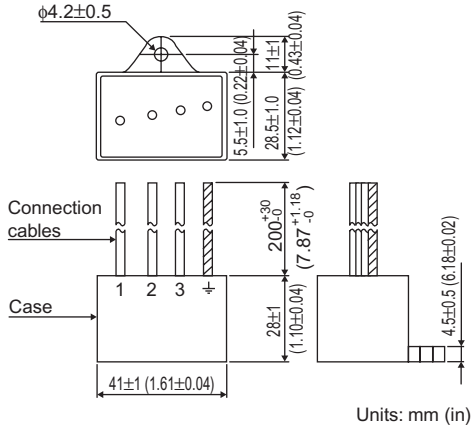	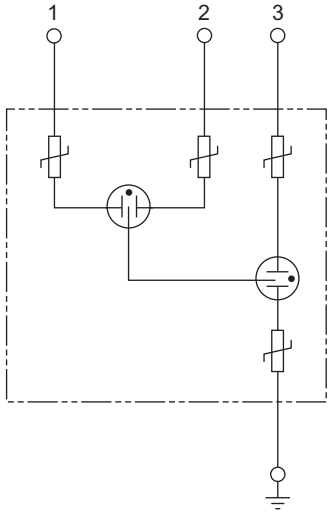

4.4.9 AC/DC Reactors for Power Supplied Designed for Minimum Harmonics

(1) Specifications

Manufactured by Yaskawa Controls Co., Ltd. Contact your Yaskawa representative for details.

If necessary for power supplied designed for minimum harmonics, connect an AC reactor to the AC line for the single-phase input, a DC reactor between the SERVOPACK main circuit terminals ⊖1 and ⊖2 for the three-phase input. Select a reactor that matches the ratings of the SERVOPACK. For wiring, refer to *5.6.5 AC/DC Reactor for Harmonic Suppression*.

Applicable SERVOPACK Model SGDS-		AC/DC Reactor Model	Reactor Specifications	
			Impedance (mH)	Rated Current (A)
Single-phase, 100 V	A5F	X5053	20.0	2.0
	01F	X5053		
	02F	X5054	5.0	3.0
	04F	X5056	2.0	5.0
Single-phase, 200 V	A5A	X5052	45.0	1.0
	01A	X5052		
	02A	X5053	20.0	2.0
	04A	X5054	5.0	3.0
	08A	X5056	2.0	5.0
Three-phase, 200 V	05A	X5061	2.0	4.8
	10A			

上正科技有限公司
購買、維修 跑手冊零組件
電話： 037-466338
Email: service@repairtw.com
Line id: @zzzz
www.repairtw.com

(2) Dimensional Drawings

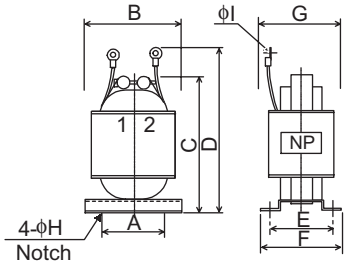

Reactor Model	Dimensions in mm (in)									Approx. Mass kg (lb)
	A	B	C	D	E	F	G	ϕH	ϕI	
X5052	35 (1.38)	52 (2.05)	80 (3.15)	95 (3.74)	30 (1.18)	40 (1.57)	45 (1.77)	4 (0.16)	4.3 (0.17)	0.4 (0.88)
X5053	35 (1.38)	52 (2.05)	90 (3.54)	105 (4.13)	35 (1.38)	45 (1.77)	50 (1.97)	4 (0.16)	4.3 (0.17)	0.6 (1.32)
X5054	35 (1.38)	52 (2.05)	80 (3.15)	95 (3.74)	30 (1.18)	40 (1.57)	45 (1.77)	4 (0.16)	4.5 (0.18)	0.4 (0.88)
X5056	35 (1.38)	52 (2.05)	80 (3.15)	95 (3.74)	30 (1.18)	40 (1.57)	45 (1.77)	4 (0.16)	4.3 (0.17)	0.4 (0.88)
X5061	35 (1.38)	52 (2.05)	80 (3.15)	95 (3.74)	35 (1.38)	45 (1.77)	50 (1.97)	4 (0.16)	4.3 (0.17)	0.5 (1.102)

4.4.10 MECHATROLINK/MECHATROLINK II Communication Cable

(1) Model: JEPMC-W6003-□□

Type	Cable Model	Cable length (L)
MECHATROLINK Communication Cable (with connectors at both ends)	JEPMC-W6003-A5	0.5 m
	JEPMC-W6003-01	1.0 m
	JEPMC-W6003-□□	□□ is the ordered length [m]

(2) Dimensional Drawings

(3) Wiring Specifications

Pin No.	Lead Color	Signal		Signal	Lead Color	Pin No.
1	empty			empty		1
2	Black	/S		/S	Black	2
3	Red	S		S	Red	3
4	empty			empty		4
Shell	–	FG		FG	–	Shell

上正科技有限公司
購買、維修 此手冊零組件
電話： 037-466333
Email: service@repairtw.com
Line id: @zzzz
www.repairtw.com

4.4.11 MECHATROLINK/MECHATROLINK II Terminator

(1) Model: JEPMC-W6022

(2) Dimensional Drawings

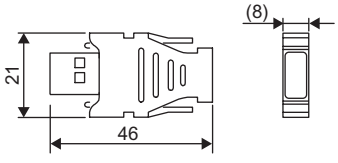

(3) Wiring Specifications

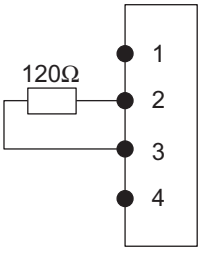

4.4.12 Cable with Connectors at both ends for Fully-closed Control

Use to connect the SERVOPACK and Serial converter unit.

(1) Model: JZSP-CLP20-03: (3 m)
JZSP-CLP20-05: (5 m)
JZSP-CLP20-10: (10 m)
JZSP-CLP20-15: (15 m)
JZSP-CLP20-20: (20 m)

(2) Dimensional Drawings

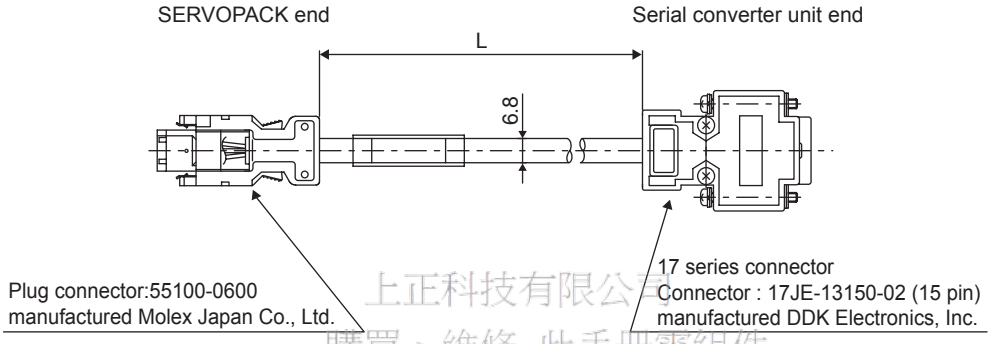

上正科技有限公司
購買、維修 此手冊零組件
電話： 037-466333
Email: service@repairtw.com
Line ID: @repairtw
www.repairtw.com

4.4.13 Serial Converter Unit for Fully-closed Control

Converts the analog output of the encoder to digital data. Serially input digital data must be used with the SERVOPACK's fully-closed control interface.

(1) Model: JZDP-A003-000 : for the Encoder by Heidenhain Corp.
JZDP-A005-000 : for the Encoder by Renishaw Inc.

(2) Dimensional Drawings

(a) JZDP-A003-000 (for the encoder by Heidenhain Corp.)

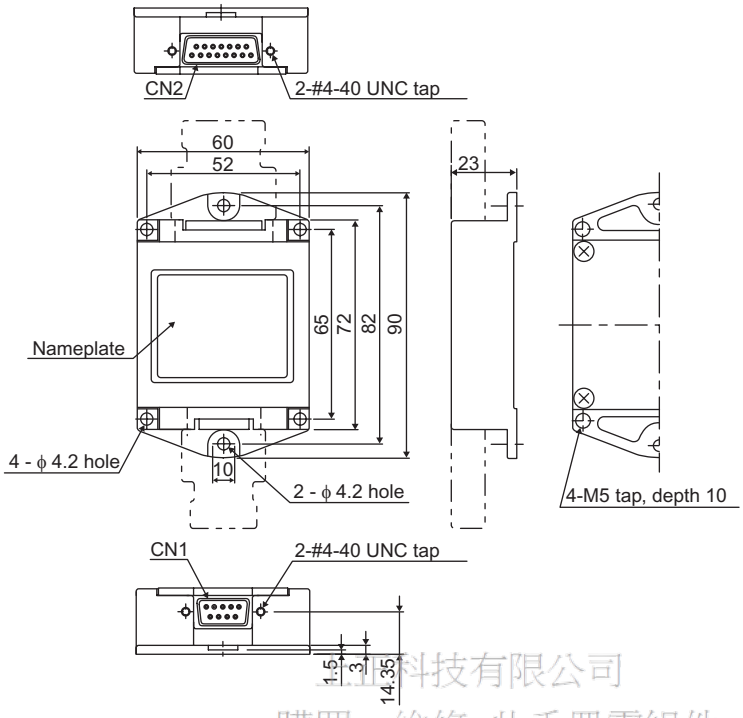

上揚科技有限公司
購買、維修 此手冊零組件
電話： 037-466333
Email: service@repairtw.com
Line id: @zzzz
www.repairtw.com

(b) JZDP-A005-000 (for the encoder by Renishaw Inc.)

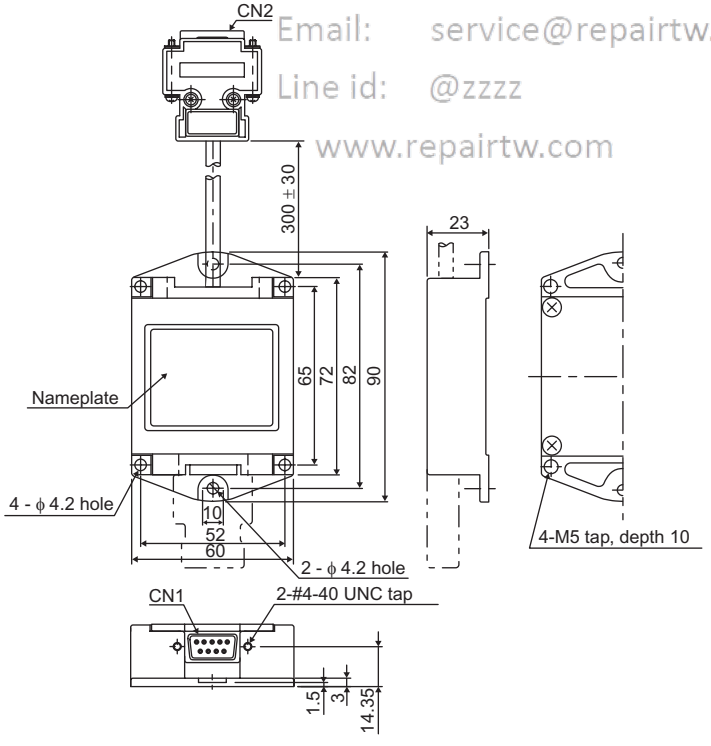

Note: For wiring and pin arrangements, refer to *5.5 Fully-closed Encoder Connections*.

上正科技有限公司
購買、維修 此手冊零組件
電話： 037-466333
Email: service@repairtw.com
Line id: @zzzz
www.repairtw.com

5

Wiring

5.1 Wiring Main Circuit - 5-2
5.1.1 Names and Descriptions of Main Circuit Terminals - - - - - - - - - - - - - - 5-2
5.1.2 Wiring Main Circuit Terminal Block (Spring Type) - - - - - - - - - - - - - - - 5-3
5.1.3 Typical Main Circuit Wiring Examples - 5-4

5.2 Wiring Encoders - 5-7
5.2.1 Connecting an Encoder - 5-7
5.2.2 CN2 Encoder Connector Terminal Layout - 5-8

5.3 I/O Signal Connections - 5-9
5.3.1 Connection Example of I/O Signal - 5-9
5.3.2 I/O Signal Connector (CN1) Terminal Layout - - - - - - - - - - - - - - - - - 5-10
5.3.3 I/O Signal (CN1) Names and Functions - 5-10
5.3.4 Interface Circuit - 5-11

5.4 Wiring MECHATROLINK II Communications - - - - - - - - - - - - 5-13
5.4.1 Wiring Example MECHATROLINK II Communications - - - - - - - - - - 5-13
5.4.2 MECHATROLINK II Communications Connectors (CN6A, CN6B) - - 5-14
5.4.3 Precautions for Wiring MECHATROLINK II Cables - - - - - - - - - - - - - 5-14

5.5 Fully-closed Encoder Connections - - - - - - - - - - - - - - - - - - - 5-16
5.5.1 Connection Example of Linear Scale by Heidenhain - - - - - - - - - - - - 5-16
5.5.2 Connection Example of Linear Scale by Renishaw - - - - - - - - - - - - - 5-17

5.6 Others - 5-18
5.6.1 Wiring Precautions - 5-18
5.6.2 Wiring for Noise Control - 5-19
5.6.3 Using More Than One SERVOPACK - 5-22
5.6.4 400 V Power Supply Voltage - 5-23
5.6.5 AC/DC Reactor for Harmonic Suppression - - - - - - - - - - - - - - - - - - - 5-24

5.7 Connecting Regenerative Resistors - - - - - - - - - - - - - - - - - - 5-25
5.7.1 Regenerative Power and Regenerative Resistance - - - - - - - - - - - - - 5-25
5.7.2 Connecting Externally Regenerative Resistors - - - - - - - - - - - - - - - - 5-25

上海科技有限公司
專業 維修 供手 調整 銷售
電話 027-466333
Email service@repairhw.com
Website www.repairhw.com

5.1 Wiring Main Circuit

This section describes typical examples of main circuit wiring, functions of main circuit terminals, and the power ON sequence.

⚠ CAUTION

- Do not bundle or run power and signal lines together in the same duct. Keep power and signal lines separated by at least 30 cm (11.81 inches).
- Use twisted-pair wires or multi-core shielded-pair wires for signal and encoder (PG) feedback lines.
  The maximum length is 3 m (118.11 inches) for reference input lines and is 20 m (787.40 in) for PG feedback lines.
- Do not touch the power terminals for five minutes after turning power OFF because high voltage may still remain in the SERVOPACK.
  Make sure the charge indicator is out first before starting an inspection.
- Avoid frequently turning the power ON and OFF. Do not turn the power ON or OFF more than once per minute.
  Because the SERVOPACK has a capacitor in the power supply, a high charging current flows for 0.2 seconds when the power is turned ON. Frequently turning the power ON and OFF causes main power devices like capacitors and fuses to deteriorate, resulting in unexpected problems.

5.1.1 Names and Descriptions of Main Circuit Terminals

上正科技有限公司
購買、維修 此手冊零組件
電話： 037-466339
Email: service@repairtw.com
Line id: @zzzz
www.repairtw.com

Terminal Symbol	Name		Description
L1, L2 or L1, L2, L3	Main circuit input terminal	50 W to 400 W	Single-phase 100 to 115 V $^{+10\%}_{,\ -15\%}$ (50/60 Hz)
		50 W to 400 W	Single-phase 200 to 230 V $^{+10\%}_{,\ -15\%}$ (50/60 Hz)
		800 W	Single-phase 200 to 230 V $^{+10\%}_{,\ -15\%}$ (50/60 Hz) Note: L3 terminal is not used. Do not connect.
		1.0 to 3.0 kW	Three-phase 200 to 230 V $^{+10\%}_{,\ -15\%}$ (50/60 Hz)
U, V, W	Servomotor connection terminals	Connects to the servomotor.	
L1C, L2C	Control power input terminal	50 W to 400 W	Single-phase 100 to 115 V $^{+10\%}_{,\ -15\%}$ (50/60 Hz)
		50 W to 3.0 kW	Single-phase 200 to 230 V $^{+10\%}_{,\ -15\%}$ (50/60 Hz)
⏚	Ground terminals (×2)	Connects to the power supply ground terminals and servomotor ground terminal.	
B1/⊕, B2 or B1/⊕, B2, B3	External regenerative resistor terminal	50 W to 400 W	Normally not connected. Connect an external regenerative resistor (provided by customer) between B1/⊕-B2 if the regenerative capacity is insufficient. Note: B3 terminal is not provided.
		1.0 to 3.0 kW	Normally short B2 and B3 (for an internal regenerative resistor). Customers must provide external regenerative resistor. Remove the wire between B2 and B3 and connect an external regenerative resistor (provided by customer) between B1/⊕ and B2 if the capacity of the internal regenerative resistor is insufficient.
⊖1, ⊖2	DC reactor terminal connection for power supply harmonic wave countermeasure	1.0 to 3.0 kW	Normally short ⊖1-⊖2. If a countermeasure against power supply harmonic waves is needed, connect a DC reactor between ⊖1-⊖2.
B1/⊕	Main circuit plus terminal	50 W to 3.0 kW	Use for DC power input (Refer to 5.1.3 (4)).
⊖	Main circuit minus terminal	50 W to 400 W	

5.1.2 Wiring Main Circuit Terminal Block (Spring Type)

⚠ CAUTION

- Observe the following precautions when wiring main circuit terminal block.
  - Remove the terminal block from the SERVOPACK prior to wiring.
  - Insert only one wire per terminal on the terminal block.
  - Make sure that the core wire is not electrically shorted to adjacent core wires.

The terminals for the main circuit power supply and control power supply terminals of SERVOPACKs with a capacity below 1.0 kW are detachable. Connect the terminals to the power supply connectors in the following manner.

(1) Wire Size

Wire can be used simply by stripping back the outer coating. The following are applicable wire sizes.

- Single wire: ϕ0.5 (0.02) to ϕ1.6 (0.06) mm (inches)
- Braided wire: AWG28 to AWG12

(2) Connection Procedure

1. Strip the end of the wire.

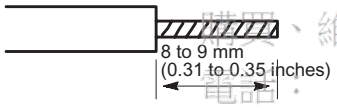

上正科技有限公司
購買、維修 此手冊零組件
電話： 037-466333
Email: service@repairtw.com
Line id: @zzzz
www.repairtw.com

2. Open the wire terminal on the terminal block housing (plug) with the tool using the procedure shown in Fig. A or B.
   - Insert the hook of the lever into the top hole, which provided with the SERVOPACK and press down to open the wire terminal as shown in Fig. A.
   - Use a standard flat-blade screwdriver (blade width of 3.0 to 3.5 mm (0.12 to 0.14 in)). Put the blade into the slot, as shown in Fig. B, and press down firmly to open the wire terminal.

   Either the procedure shown in Fig. A or B can be used to open the wire insert opening.

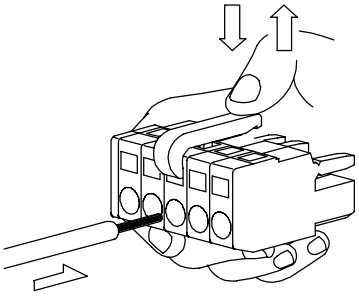

Fig. A

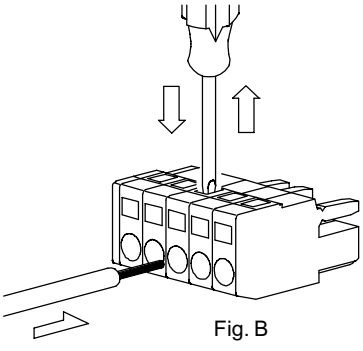

Fig. B

3. Insert the wire core into the opening and then close the opening by releasing the lever or removing the screwdriver.

5.1.3 Typical Main Circuit Wiring Examples

(1) Single-phase, 100/200 V

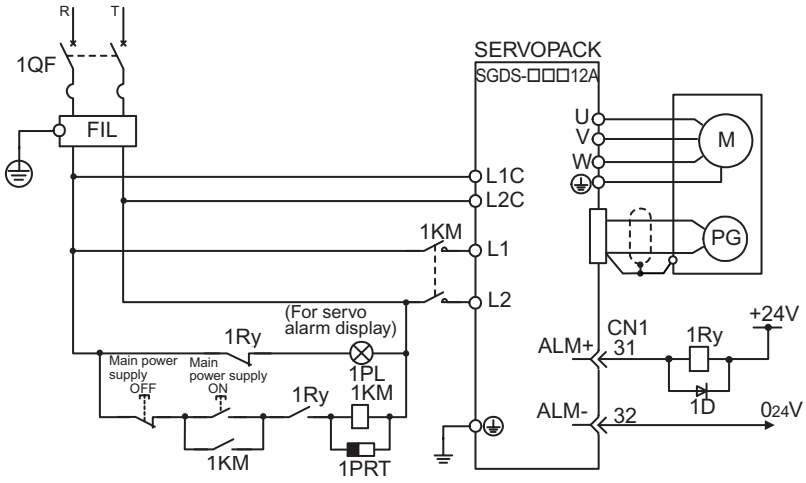

1QF : Molded-case circuit breaker
FIL : Noise filter
1KM : Magnetic contactor
1Ry : Relay
1PL : Indicator lamp
1PRT : Surge protector
1D : Flywheel diode

上正科技有限公司
購買、維修 此手冊零組件
電話： 037-466333
Email: service@repairtw.com
Line id: @zzzz
www.repairtw.com

(2) Three-phase, 200 V

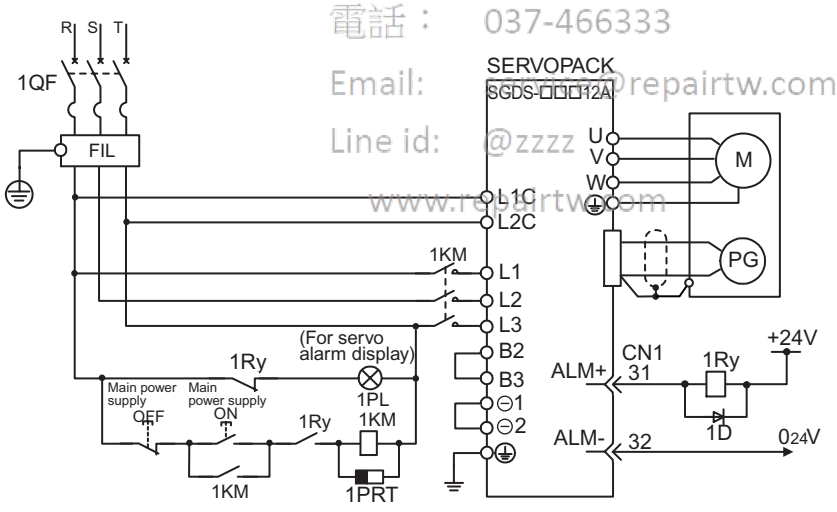

1QF : Molded-case circuit breaker
FIL : Noise filter
1KM : Magnetic contactor
1Ry : Relay
1PL : Indicator lamp
1PRT : Surge protector
1D : Flywheel diode

IMPORTANT

■Designing a Power ON Sequence

Note the following points when designing the power ON sequence.

- Design the power ON sequence so that main power is turned OFF when a servo alarm signal is output. (See the circuit figure above.)
- Hold the power ON button for at least two seconds just after the control power is turned ON. The SERVOPACK will output a servo alarm signal for two seconds or less when power is turned ON. This is required in order to initialize the SERVOPACK.

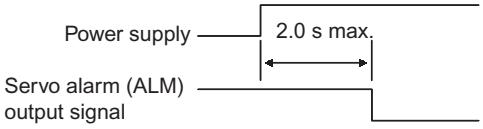

- Select the power supply specifications for the parts in accordance with the input power supply.

■Power Supply Harmonic Waves

If a countermeasure against power supply harmonic waves is needed for other requirements, insert the AC reactor to AC power supply input of the SERVOPACK or insert the DC reactor to the internal DC main circuit.

Refer to *5.6.5 AC/DC Reactor for Harmonic Suppression.*

(3) 800 W, Single-phase 200V

全正科技有限公司
購買、維修 此手冊零組件
電話： 03
Email: service@
Line id: @
www.repair

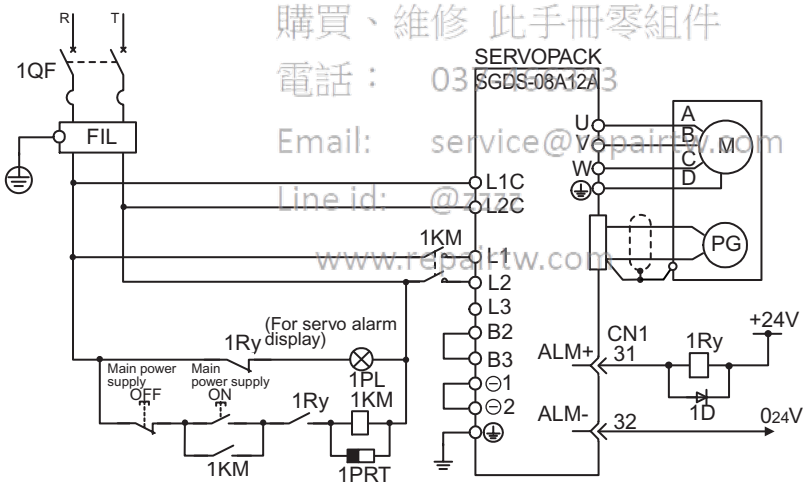

1QF : Molded-case circuit breaker
FIL : Noise filter
1KM : Magnetic contactor
1Ry : Relay
1PL : Indicator lamp
1PRT : Surge protector
1D : Flywheel diode

Note: L3 terminal is not used for the single-phase 200 V, 800 W SERVOPACKs. Do not connect.

(4) DC Power Supply Input

⚠ WARNING

- Do not use a DC power supply for 100V SERVOPACK SGDS-□□F□□□
  A DC power supply will destroy the SERVOPACK, which may cause a fatal accident or fire.
  Do not change the factory setting for Pn001, which is preset to ZERO (n.□000), indicating that "DC power supply input not supported".
- 200V SERVOPACK SGDS-□□A□□□ is applicable for both AC and DC power supply input.
  However, if the DC power supply input supplies a voltage without setting 'Pn001 = n.□1□□' (for DC power supply input), the SERVOPACK's internal elements will burn and may cause fire or malfunction.
  When using the SERVOPACK with DC power supply input, confirm the following setting of parameters.

When using the SGDH SERVOPACK with DC power supply input, use the following power supply and set the parameter Pn001.2 for '1'. Also, read carefully to the following 'Important' section.

(a) Main Circuit and Control Power Supply Input

The following shows the connection for the main power supply and the control power supply.

Terminal Symbol	Name	Functions
B1/⊕	Main circuit plus terminal	270 V to 320 VDC
⊖ or ⊖2	Main circuit minus terminal	0 V
L1C, CL2C	Control power supply input terminal	270 to 320 VDC, without polarity

上正科技有限公司
購買、維修 此手冊零組件
電話：037-466333
Email: service@repairtw.com
Line Id: @3737
www.repairtw.com

IMPORTANT

1. Servomotor returns the regenerative energy to the power supply when regenerating. SERVOPACK does not regenerate with DC power supply input specifications, so regenerate the energy on the power supply side.
2. Take appropriate measures to ensure that a high charging current stays inside the SERVOPACK when power is OFF.

5.2 Wiring Encoders

The connection cables between encoder and SERVOPACK and wiring pin numbers differ depending on servomotor model. Refer to *4 Specifications and Dimensional Drawings of Cables and Peripheral Devices* for details.

5.2.1 Connecting an Encoder

(1) Incremental Encoders

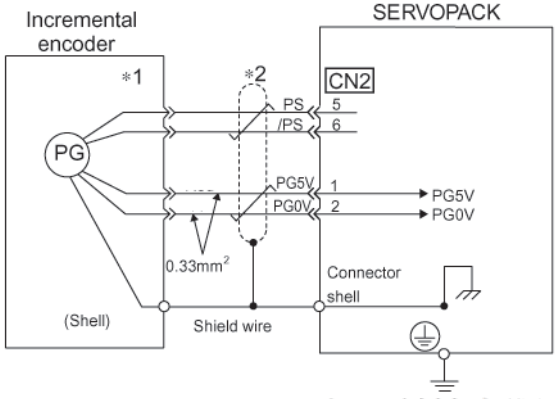

*1 The pin numbers for the connector wiring differ depending on the servomotors.

*2 : represents twisted-pair wires.

上正科技有限公司
購買、維修 此手冊零組件
電話： 037-466333
Email: service@repairtw.com
Line id: @zzzz
www.repairtw.com

(2) Absolute Encoders

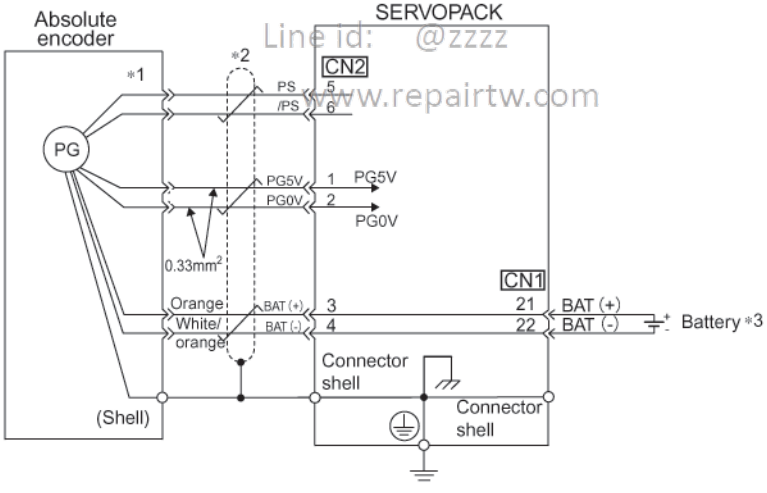

*1 The pin numbers for the connector wiring differ depending on the servomotors.

*2 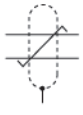 : represents twisted-pair wires.

*3 When using an absolute encoder, the backup power is supplied from the battery on the host controller. If the backup power is not supplied from the battery on the host controller, use an encoder cable with a battery unit JZSP-BA01.

5.2.2 CN2 Encoder Connector Terminal Layout

1	PG5V	PG power supply +5 V	2	PG 0 V	PG power supply 0 V
3	BAT (+)	Battery (+) (For an absolute encoder)	4	BAT (-)	Battery (-) (For an absolute encoder)
5	PS	PG serial signal input	6	/PS	PG serial signal input
SHELL	Shield	–	–	–	–

上正科技有限公司
購買、維修 此手冊零組件
電話： 037-466333
Email: service@repairtw.com
Line id: @zzzz
www.repairtw.com

5.3 I/O Signal Connections

5.3.1 Connection Example of I/O Signal

The following diagram shows a typical example of I/O signal connections.

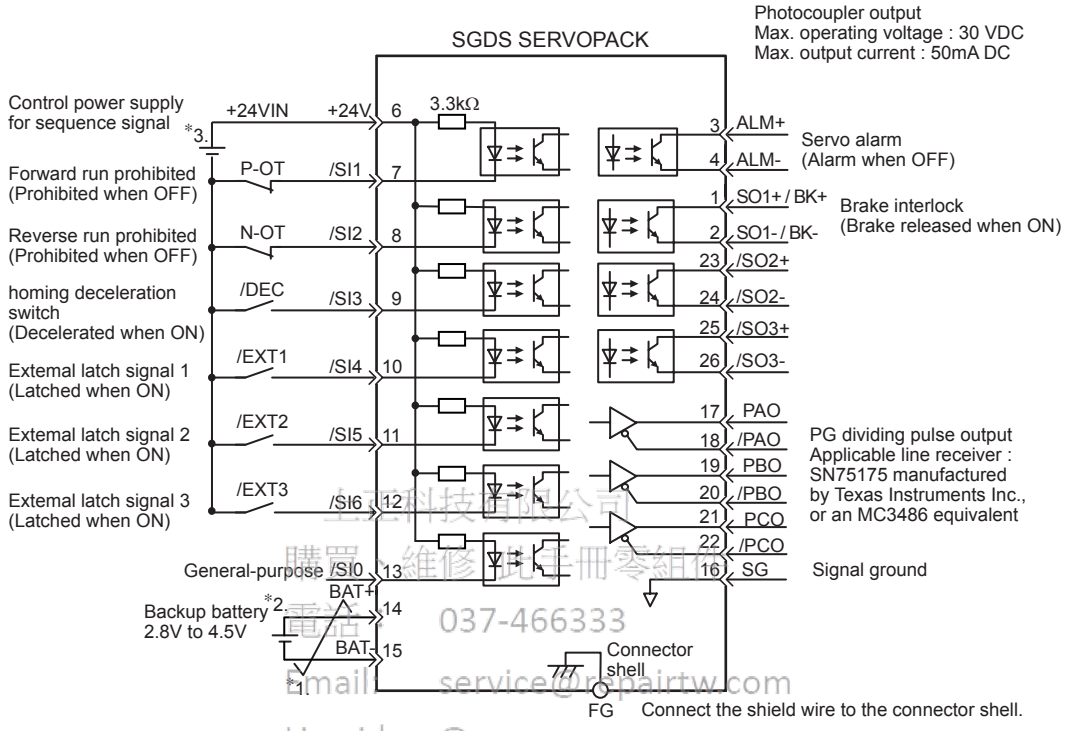

全球科技有限公司
購買、維修此手冊零組件
電話: 037-466333
Email: service@repairtw.com
Line id: @zzzz
www.repairtw.com

* 1. represents twisted-pair wires.
* 2. Connect when using an absolute encoder if the encoder cable for the battery case is connected, do not connect a backup battery.
* 3. Customers must purchase a 24 VDC power supply with double-shielded enclosure.

5.3.2 I/O Signal Connector (CN1) Terminal Layout

The following diagram shows the layout of the CN1 terminals.

1	/BK+ (/SO1+)	Brake interlock output	2	/BK- (/SO1-)	Brake interlock output	14	BAT(+)*2	Battery (+) input	15	BAT(-)*2	Battery (-) input
3	ALM+	Servo alarm output	4	ALM-	Servo alarm output	16	SG	Signal ground	17	PAO	PG dividing pulse (Phase-A) output
5			6	+24VIN	Control power supply for sequence signal input	18	/PAO	PG dividing pulse (Phase-A) output	19	PBO	PG dividing pulse (Phase-B) output
7	P-OT (/SI1)	Forward run prohibited input	8	N-OT (/SI2)	Reverse run prohibited input	20	/PBO	PG dividing pulse (Phase-B) output	21	PCO	PG dividing pulse (Phase-C) output
9	/DEC (/SI3)	Zero-point return deceleration switch input	10	/EXT1 (/SI4)	External latch signal 1 input	22	/PCO	PG dividing pulse (Phase-C) output	23	/SO2+*1	General-purpose input
11	/EXT2 (/SI5)	External latch signal 2 input	12	/EXT3 (/SI6)	External latch signal 3 input	24	/SO2-*1	General-purpose input	25	/SO3+*1	General-purpose input
13	/SI0	General-purpose input				26	/SO3-*1	General-purpose input			

* 1. Make the signal allocations using parameters.

* 2. Connect a battery to CN1 or to a battery case. Connecting both batteries creates a loop circuit that is dangerous between the two batteries.

Note: 1. The connector shell is connected to the FG (frame ground).

2. Do not use the unused terminals.

上正科技有限公司
購買、維修、此手冊零組件
電話： 037-466333
Email: service@repairtw.com
Line id: @zzzz
www.repairtw.com

5.3.3 I/O Signal (CN1) Names and Functions

(1) Input Signals

Signal Name		Pin No.	Function	
Common	/DEC	9	Homing deceleration limit switch signal: Connects the deceleration LS (limit switch) for homing.	
	P-OT N-OT	7 8	Forward run prohibited signal Reverse run prohibited signal	Overtravel prevention signal: Stops servomotor when movable part travels beyond the allowable range of motion.
	/EXT1toEXT3 /EXT2 /EXT3	10 11 12	External latch signals 1, 2, and 3: Connects the external signals that latch the current FB pulse counter.	
	+24VIN	6	Control power supply for sequence signal: Users must provide +24 V power supply. Allowable voltage fluctuation range: +11 to +25 V	
	BAT (+) BAT (-)	14 15	Battery input for absolute encoder: Used for absolute encoder battery input when a battery unit is not used.	
	/SI0	13	General-purpose sequence input signal: Monitored in the I/O monitor field of MECHATROLINK/MECHATROLINK II.	

Note: 1. The functions allocated to /DEC, P-OT, N-OT, /EXT1, /EXT2, and /EXT3 input signals can be changed by setting the parameters.

2. For forward/reverse run prohibited, the SERVOPACK processing for stopping is executed by the software. As the safety specifications of some applications may not satisfy local safety requirements, add the external safety circuits as required.

3. The signal /SI0 (pin No. 13) can be monitored as a general-purpose input with the MECHATROLINK/MECHATROLINK II.

(2) Output Signals

Signal Name		Pin No.	Function
Com-mon	ALM+ ALM-	3 4	Servo alarm signal: Turns OFF when an error is detected.
	/BK+ (/SO1+) /BK- (/SO1-)	1 2	Brake interlock signal: Controls the brake. The brake is released when the signal is ON.
	/SO2+ /SO2-	23 24	General-purpose output signal: A function can be allocated by setting the parameter.
	/SO3+ /SO3-	25 26	
	FG	Shell	Connected to the frame ground if the shield wire of the I/O signal cable is connected to the connector shell.

Note: The output signals /SO1, /SO2, and /SO3 can be used as the output signal /COIN, /V-CMP, /TGON, /S-RDY, /CLT, /VLT, /BK, /WARN, or /NEAR by setting the parameter Pn50E, Pn50F, or Pn510.

5.3.4 Interface Circuit

This section shows examples of SERVOPACK I/O signal connection to the host controller.

(1) Sequence Input Circuit Interface

E正科技有限公司
購買、維修、此手冊零組件
電話： 037-466333
Email: service@repairtw.com
Line id: @zzzz
www.repairtw.com

CN1 connector terminals 6 to 13 is explained below.

The sequence input circuit interface connects through a relay or open-collector transistor circuit. Select a low-current relay otherwise a faulty contact will result.

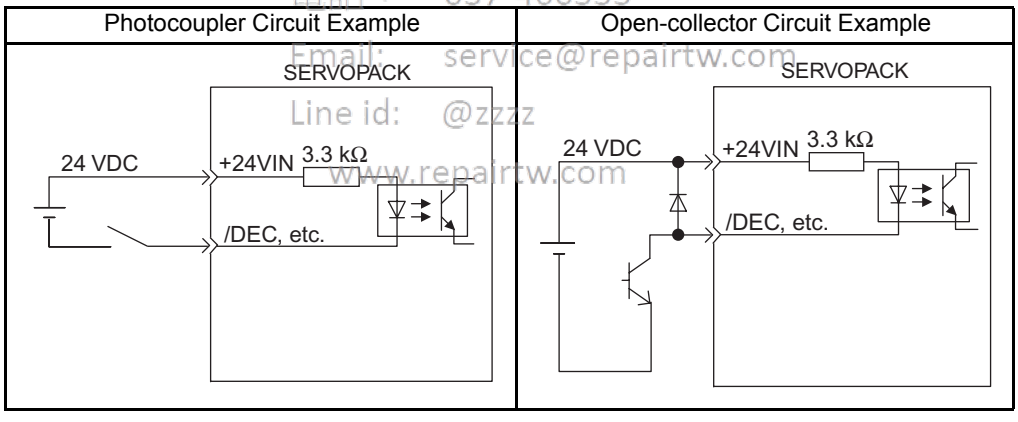

Note: The 24 VDC external power supply capacity must be 50 mA minimum.

(2) Output Circuit Interface

There are two types of SERVOPACK output circuits:

(a) Line Driver Output Circuit

CN1 connector terminals, 17-18 (phase-A signal), 19-20 (phase-B signal), 21-22 (phase-C signal) are explained below.

Encoder serial data converted to two-phase (phases A and B) pulse output signals (PAO, /PAO, PBO, /PBO) and origin pulse signals (PCO, /PCO) are output via line-driver output circuits. Connect the line-driver output circuit through a line receiver circuit at the host controller.

(b) Photocoupler Output Circuit

Photocoupler output circuits are used for servo alarm (ALM), brake interlock (/BK), and other sequence output signal circuits. Connect a photocoupler output circuit through a relay or line receiver circuit.

Relay Circuit Example	Line Receiver Circuit Example
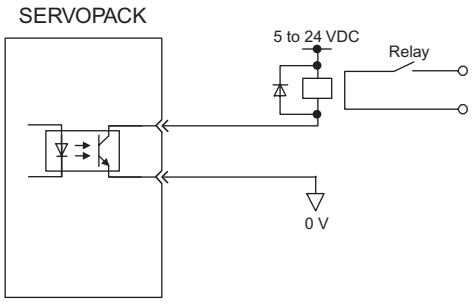	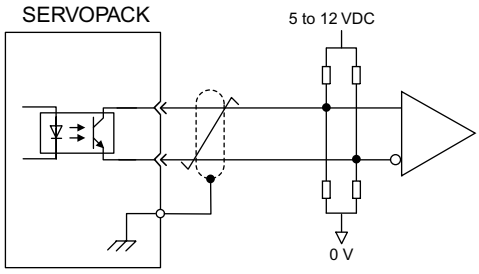

Note: The maximum allowable voltage and current capacities for photocoupler output circuits are as follows.

- Voltage: 30 VDC
- Current: 50 mA DC

上正科技有限公司
購買、維修 此手冊零組件
電話： 037-466333
Email: service@repairtw.com
Line id: @zzzz
www.repairtw.com

5.4 Wiring MECHATROLINK II Communications

The following diagram shows an example of connections between a host controller and a SERVOPACK using MECHATROLINK II communications cables (CN6A, CN6B).

5.4.1 Wiring Example MECHATROLINK II Communications

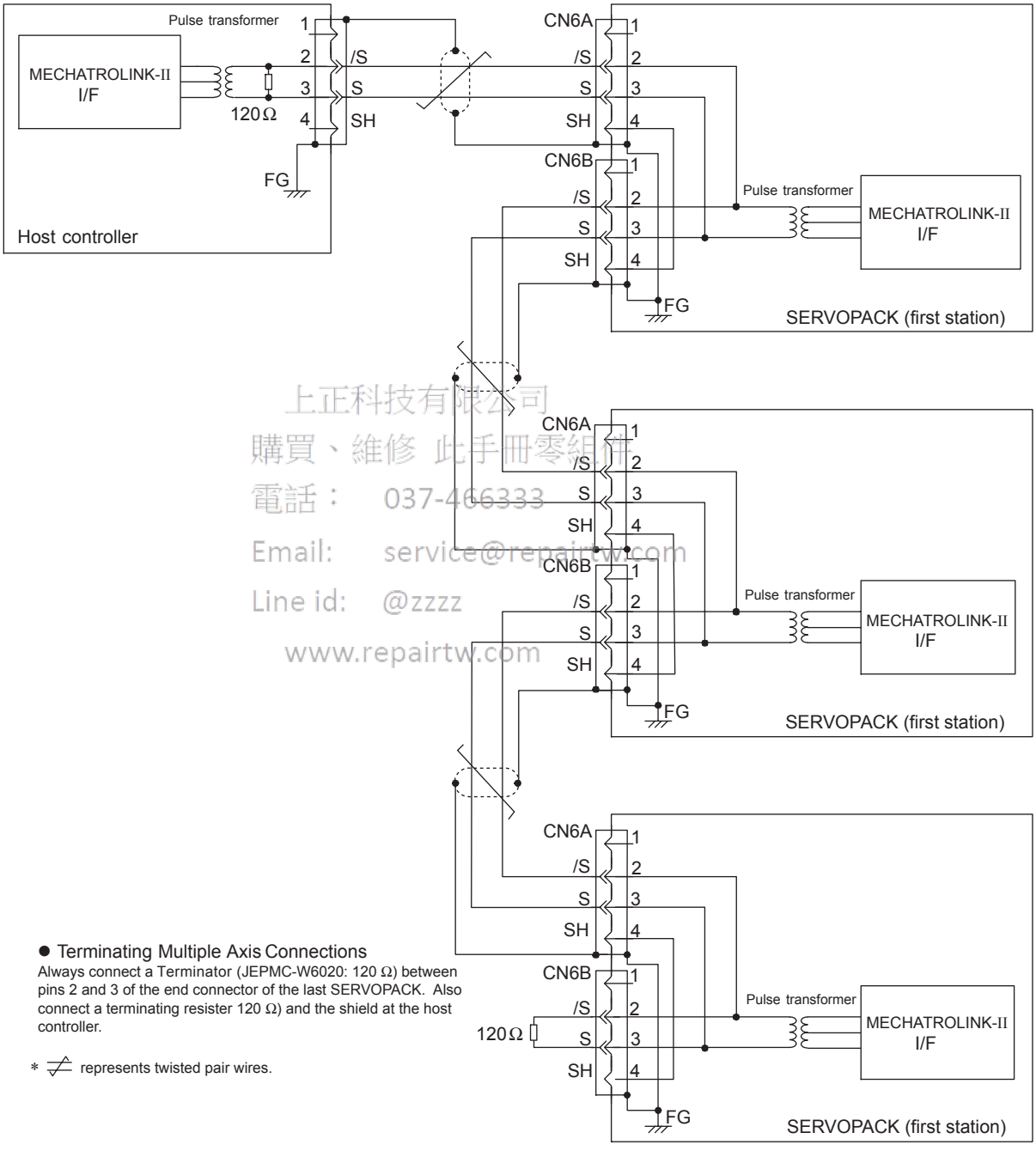

上正科技有限公司
購買、維修 此手冊零組件
電話： 037-466333
Email: service@repairtw.com
Line id: @zzzz
www.repairtw.com

● Terminating Multiple Axis Connections

Always connect a Terminator (JEPMC-W6020: 120 Ω) between pins 2 and 3 of the end connector of the last SERVOPACK. Also connect a terminating resister 120 Ω) and the shield at the host controller.

* represents twisted pair wires.

5.4.2 MECHATROLINK II Communications Connectors (CN6A, CN6B)

The terminal layout and specifications of the CN6A and CN6B connectors are shown below.

(1) CN6A and CN6B Connectors Terminal Layout

1	2	3	4
–	/S	S	SH
Not connected	Serial data I/O		Not connected

Note: The connector shell is connected to the FG (frame ground).

(2) CN6A and CN6B Specifications

Specifications for SERVO-PACK Connectors	Applicable Plug (or Socket)	
	Connector (on Cable)	Manufacturer
DUSB-ARA41-T11	DUSB-APA41-B1-C50	DDK Ltd.

5.4.3 Precautions for Wiring MECHATROLINK II Cables

Observe the following precautions when wiring MECHATROLINK II cables.

(1) Number of Stations

The number of stations is determined by the settings for the transmission cycle and number of transmission bytes. When the communications retry channel is set to 1, the C2 master is not connected and the number of stations possible is as follows for the combinations of transmission cycle and transmission bytes.

上位科技有限公司
購買、維修、此手冊零組件
電話：03-4663393
Email: service@repairtw.com
Line id: @zzzz
www.repairtw.com

Table 5.1 Transmission Cycle, Transmission Bytes, and Max. Number of Stations

Transmission Bytes	Transmission Cycle								
	0.25 ms*	0.5 ms	1.0 ms	1.5 ms	2.0 ms	2.5 ms	3.0 ms	3.5 ms	4.0 ms
17	2	6	14	23	30	30	30	30	30
30	0	3	8	14	20	25	30	30	30

* When the transmission cycle is 0.25 ms, set the communications cycle in multiples of 0.5 ms.

Note: 1. When the number of stations actually connected is less than the max. number of stations, the remaining channels can be used as communications retry channels. (Number of communications retry channels = Max. number of stations - Number of actual stations connected+1)
2. When not using communications retry, the max. number of stations is increased by one.
3. When connecting the C2 master, the max. number of stations is decreased by one.

(2) Cables

Be sure to use the specified cables.

For more information on cables, refer to *4.4.10 MECHATROLINK/MECHATROLINK II Communication Cable*, *4.4.11 MECHATROLINK/MECHATROLINK II Terminator*.

(3) Cable Length

The total cable length must be 50 m or less.

(4) Cable Length between Stations

The length of the cable between stations must be 0.5 m or more.

(5) Terminal Processing

Install a Terminator on the last SERVOPACK and host controller.

For more information on Terminators, refer to *4.4.10 MECHATROLINK/MECHATROLINK II Communication Cable*, *4.4.11 MECHATROLINK/MECHATROLINK II Terminator*.

A MECHATROLINK II wiring diagram is shown below.

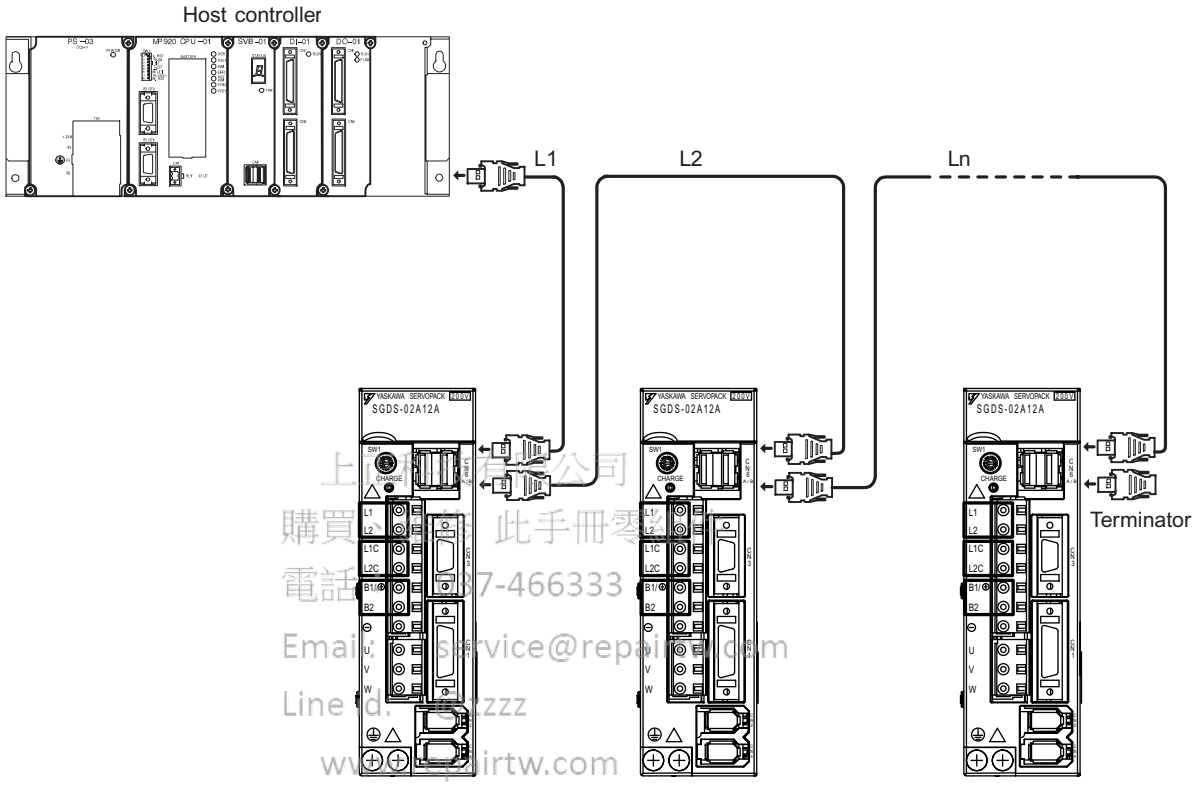

Note: 1. The total cable length must be L1 + L2 ... + Ln ≤ 50.
2. The length of the cable stations (L1, L2 ... Ln) must be 0.5 m or more.

5.5 Fully-closed Encoder Connections

5.5.1 Connection Example of Linear Scale by Heidenhain

(1) Serial Converter Unit Model: JZDP-A003-000

(2) Connection Example

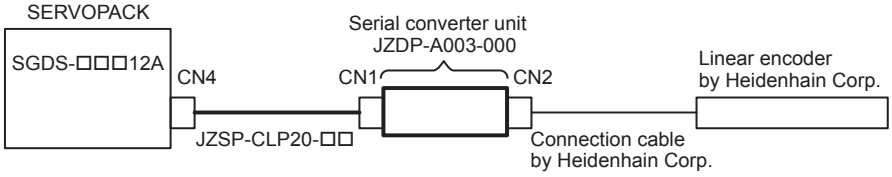

Note: Contact Yaskawa Electric Corporation for the devices drawn in bold lines.

(3) Pin Assignments

Pin No.	Signal
1	+5V
2	S-phase output
3	Empty
4	Empty
5	0V
6	/S-phase output
7	Empty
8	Empty
9	Empty
Case	Shield

CN1
SERVOPACK end
Serial data output

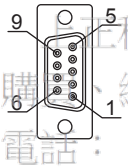

17-series connector model:
17JE-13090-02 (D2C)
(socket) by DDK Ltd.

Pin No.	Signal
1	cos input (A+)
2	0V
3	sin input (B+)
4	+5V
5	Empty
6	Empty
7	/Ref input (R-)
8	Empty
9	/cos input (A-)
10	0V sensor
11	/sin input (B-)
12	5V sensor
13	Empty
14	Ref input (R+)
15	Empty
Case	Shield

CN2
Linear encoder end
Analog signal input

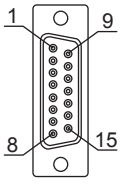

17-series connector model :
17JE-13150-02 (D2C)
(socket) by DDK Ltd.

正科技有限公司
購、維修 此手冊零組件
電話： 037-466332
Email: service@repairtw.com
Line id: @zzzz
www.repairtw.com

Note: Do not use empty pins.
The I/F cable (analog $1V_{p-p}$. output, D-sub 15-pin) of linear scale manufactured by Heidenhain Corp. can be connected directly.

5.5.2 Connection Example of Linear Scale by Renishaw

(1) Serial Converter Unit Model: JZDP-A005-000

(2) Connection Example

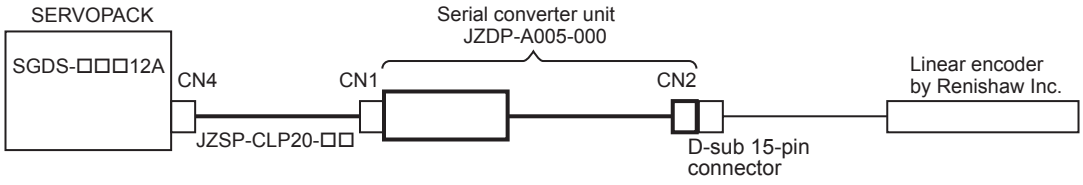

Note: Contact Yaskawa Electric Corporation for the devices drawn in bold lines.

(3) Pin Assignments

Pin No.	Signal
1	+5V
2	S-phase output
3	Empty
4	Vq
5	0V
6	/S-phase output
7	Empty
8	0V(Vq)
9	Empty
Case	Shield

The SERVOPACK has no function to process Vq signal.

CN1

SERVOPACK end
Serial data output

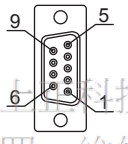

17-series connector model:
17 JE-13090-02 (D2C)
(socket) by DDK Ltd.

Pin No.	Signal
1	/cos input (V1-)
2	/sin input (V2--)
3	Ref input (V0+)
4	+5V
5	5Vs
6	Empty
7	Empty (Vx)
8	Limit switch (Vq)
9	cos input (V1+)
10	sin input (V2+)
11	/Ref input (V0–)
12	0V
13	0Vs
14	Empty
15	Inner (0V)
Case	Shield

CN2

Linear encoder end
Analog signal input

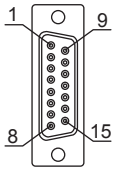

17-series connector model:
17 JE-13150-02 (D2C)
(socket) by DDK Ltd.

上達科技有限公司
購買、維修 此手冊型號
電話: 037-466133
Email: service@repairtw.com
Line id: @zzzz
www.repairtw.com

(注) Do not use empty pins.
The linear scale (analog $1V_{p-p}$ output, D-sub 15-pin) manufactured by Renishaw Inc. can be connected directly. However, BID and DIR signals are not connected.
Use the linear scale end connector to change the linear scale home position specifications.

5.6 Others

5.6.1 Wiring Precautions

To ensure safe and stable operation, always observe the following wiring precautions.

IMPORTANT

1. For wiring for reference inputs and encoders, use the specified cables. Refer to *4 Specifications and Dimensional Drawings of Cables and Peripheral Devices* for details.
   Use cables that are as short as possible.
2. For a ground wire, use as thick a cable as possible (2.0 mm^2 (0.079 in^2) or thicker).
   - At least class-3 ground (100 Ω max.) is recommended.
   - Ground to one point only.
   - If the servomotor is insulated from the machine, ground the servomotor directly.
3. Do not bend or apply tension to cables.
   The conductor of a signal cable is very thin (0.2 to 0.3 mm (0.0079 to 0.012 in)), so handle the cables carefully.
4. Use a noise filter to prevent noise interference.
   (For details, refer to *5.6.2 Wiring for Noise Control*.)
   - If the equipment is to be used near private houses or may receive noise interference, install a noise filter on the input side of the power supply line.
   - Because the SERVOPACK is designed as an industrial device, it provides no mechanism to prevent noise interference.
5. To prevent malfunction due to noise, take the following actions:
   - Position the input reference device and noise filter as close to the SERVOPACK as possible.
   - Always install a surge protector in the relay, solenoid and electromagnetic contactor coils.
   - The distance between a power line (such as a power supply line or servomotor cable) and a signal line must be at least 30 cm (11.81 in). Do not put the power and signal lines in the same duct or bundle them together.
   - Do not share the power supply with an electric welder or electrical discharge machine. When the SERVOPACK is placed near a high-frequency generator, install a noise filter on the input side of the power supply line.
6. Use a molded-case circuit braker (QF) or fuse to protect the power supply line from high voltage.
   - The SERVOPACK connects directly to a commercial power supply without a transformer, so always use an QF or fuse to protect the servo system from accidental high voltage.
7. The SERVOPACKs do not have built-in ground protection circuits. To configure a safer system, install an earth leakage braker for protection again overloads and short-circuiting, or install an earth leakage braker combined with a wiring circuit braker for ground protection.

上作科技有限公司
購買、維修 此手冊零組件
電話： 037-466333
Email: service@repairtw.com
Line Id: @2222
www.repairtw.com

5.6.2 Wiring for Noise Control

(1) Wiring Example

The SERVOPACK uses high-speed switching elements in the main circuit. It may receive “switching noise” from these high-speed switching elements if wiring or grounding around the SERVOPACK is not appropriate. To prevent this, always wire and ground the SERVOPACK correctly.

The SERVOPACK has a built-in microprocessor (CPU), so protect it from external noise as much as possible by installing a noise filter in the appropriate place.

The following is an example of wiring for noise control.

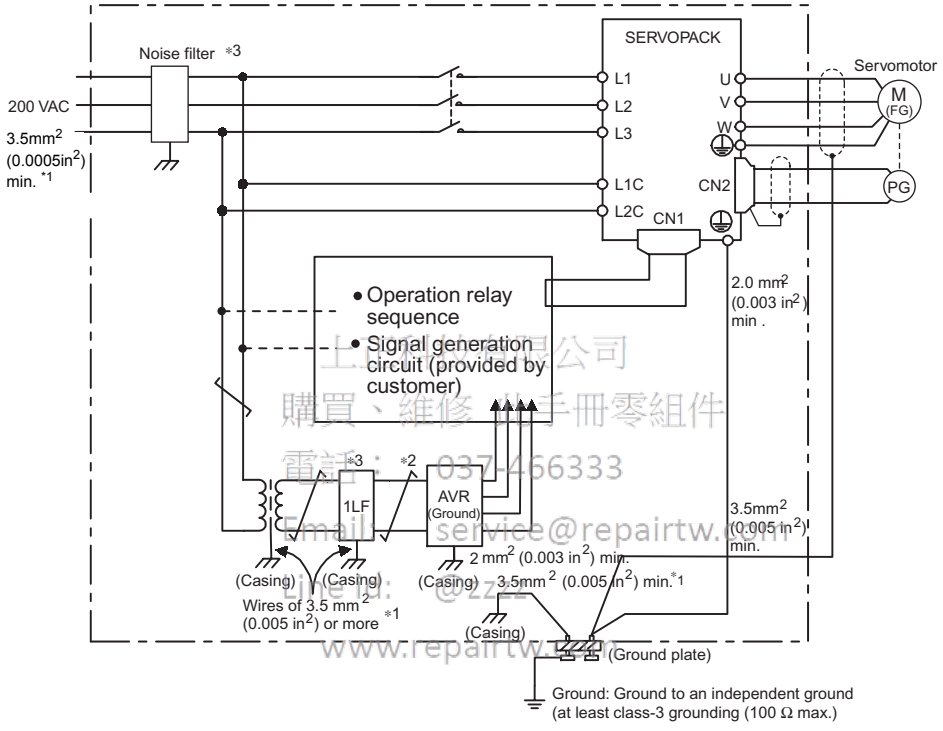

上隆有限公司
購買、維修、出手冊零組件
電話：037-466333
Email: service@repairtw.com
Line Id: @zzzz
www.repairtw.com

*1 For ground wires connected to the casing, use a thick wire with a thickness of at least 3.5 mm^2 (0.005 in^2) (preferably, plain stitch cooper wire)

*2 should be twisted-pair wires.

*3 When using a noise filter, follow the precautions in *(3) Using Noise Filter.*

(2) Correct Grounding

Always connect servomotor frame terminal FG to the SERVOPACK ground terminal ⏚. Also be sure to ground the ground terminal ⏚.

If the servomotor is grounded via the machine, a switching noise current will flow from the SERVOPACK power unit through motor stray capacitance. The above grounding is required to prevent the adverse effects of switching noise.

(3) Using Noise Filters

Use an inhibit type noise filter to prevent noise from the power supply line. The following table lists recommended noise filters for each SERVOPACK model.

Install a noise filter on the power supply line for peripheral equipment as necessary.

Table 5.2 Noise Filters

Main Circuit Power	SERVOPACK Model		Recommended Noise Filter	
	Capacity (kW)	SGDS-	Model	Specifications
Single-phase 100 V	0.05	A5F	FN2070-6/07	Single-phase AC 250 V, 6 A
	0.10	01F		
	0.20	02F	FN2070-10/07	Single-phase AC 250 V, 10 A
	0.40	04F	FN2070-16/07	Single-phase AC 250 V, 16 A
Single-phase 200 V	0.05	A5A	FN2070-6/07	Single-phase AC 250 V, 6 A
	0.10	01A		
	0.20	02A		
	0.40	04A	FN2070-10/07	Single-phase AC 250 V, 10 A
	0.80	08A	FN2070-16/07	Single-phase AC 250 V, 16 A
Three-phase 200 V	0.5	05A	FN258L-7/07	Three-phase AC 480 V, 7 A
	1.0	10A	FN258L-16/07	Three-phase AC 480 V, 16 A

Note: Recommended noise filter is manufactured by SCHAFFNER.

上正科技有限公司
購買、維修 此手冊零組件
電話： 037-466333
Email: service@repairtw.com
Line id: @zzzz
www.repairtw.com

IMPORTANT

■The precautions in using noise filter

Always observe the following installation and wiring instructions. Incorrect use of a noise filter halves its benefits.

1. Do not put the input and output lines in the same duct or bundle them together.

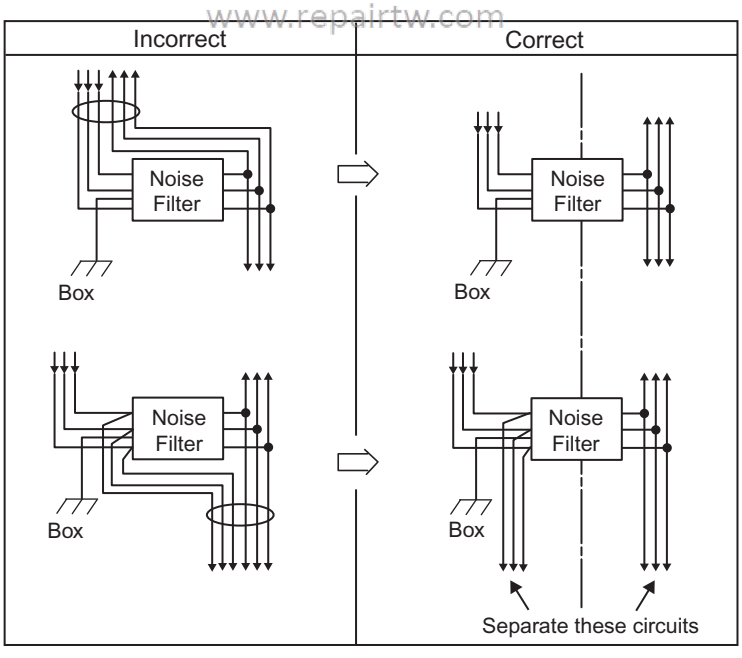

2. Separate the noise filter ground wire from the output lines.
   Do not accommodate the noise filter ground wire, output lines and other signal lines in the same duct or bundle them together.

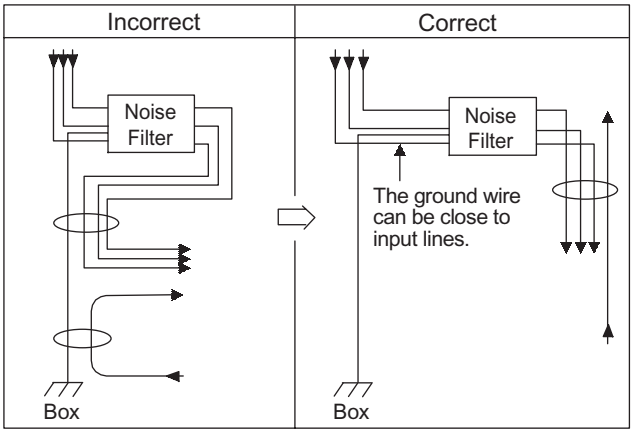

3. Connect the noise filter ground wire directly to the ground plate.
   Do not connect the noise filter ground wire to other ground wires.

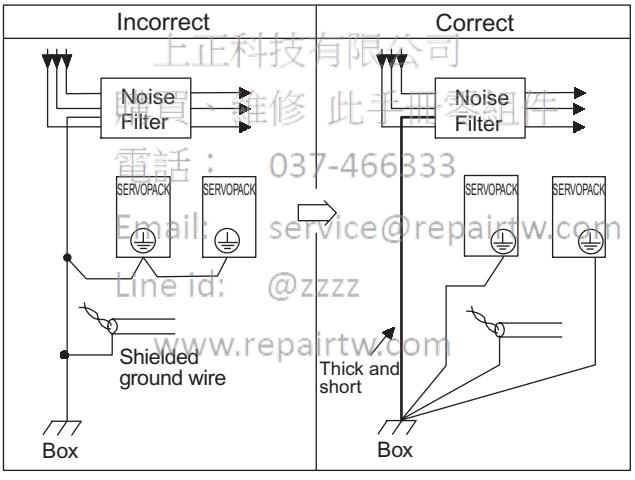

上正科技有限公司
購買、維修 此手冊參考用
電話： 037-466333
Email: service@repairtw.com
Line id: @zzzz
www.repairtw.com

4. When grounding a noise filter inside a unit:
   If a noise filter is located inside a unit, connect the noise filter ground wire and the ground wires from other devices inside the unit to the ground plate for the unit first, then ground these wires.

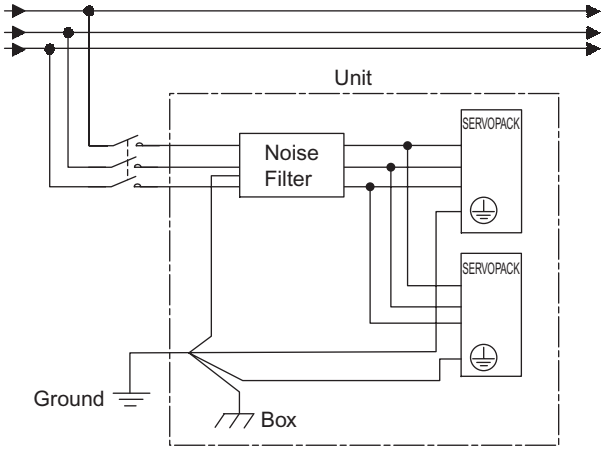

5.6.3 Using More Than One SERVOPACK

The following diagram is an example of the wiring when more than one SERVOPACK is used.

Connect the alarm output (ALM) terminals for the three SERVOPACKs in series to enable alarm detection relay 1RY to operate.

When the alarm occurs, the ALM output signal transistor is turned OFF.

Multiple servos can share a single molded-case circuit braker (QF) or noise filter. Always select a QF or noise filter that has enough specifications for the total power capacity (load conditions) of those servos. For details, refer to *2.5.2 Molded-case Circuit Breaker and Fuse Capacity*.

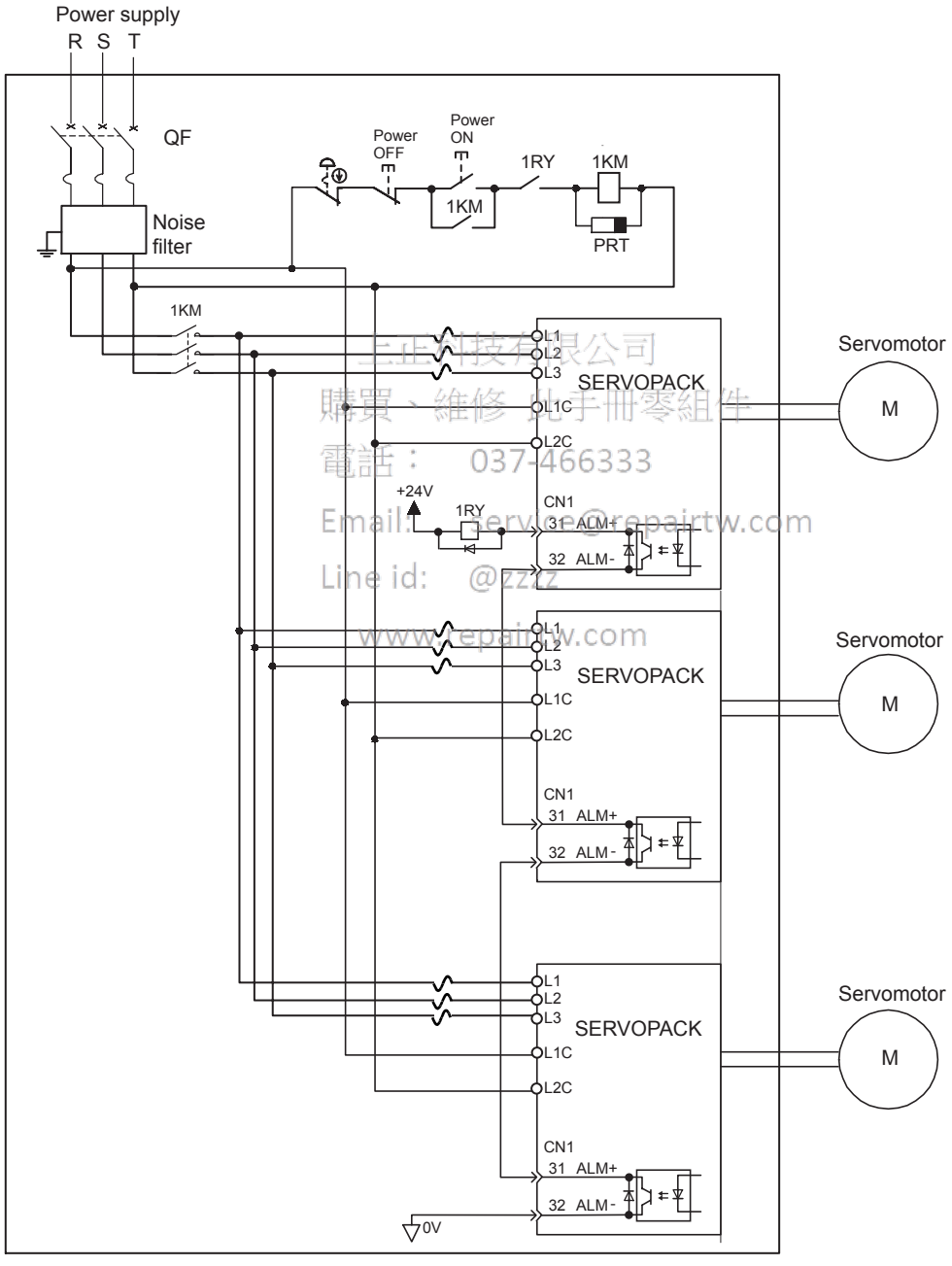

三正科技有限公司
購買、維修 此手冊零組件
電話： 037-466333
Email: service@repairtw.com
Line id: @zzzz
www.repairtw.com

• Wire the system to comply to National Electrical Code.

5.6.4 400 V Power Supply Voltage

⚠ CAUTION

- Do not connect the SERVOPACK for 100 V and 200 V directly to a voltage of 400 V.
  The SERVOPACK will be destroyed.
- Control the AC power supply ON and OFF sequence at the primary side of voltage conversion transfer.
  Voltage conversion transfer inductance will cause a surge voltage if the power is turned ON and OFF at the secondary, damaging the SERVOPACK.

When using SERVOPACK with the three-phase 400-VAC class (380 V to 480 V), prepare the following voltage conversion transfers (single-phase or three-phase).

Primary Voltage		Secondary Voltage
380 to 480 VAC	→	200 VAC
380 to 480 VAC	→	100 VAC

When selecting a voltage conversion transfer, refer to the capacities shown in the following table.

Voltage	SERVOPACK Model	Voltage Capacity per SERVOPACK * (kVA)	Current Capacity of Circuit braker or Fuse (Arms)
Single-phase 100 V	SGDS-A5F	0.25	4
	SGDS-01F	0.40	4
	SGDS-02F	0.60	6
	SGDS-04F	1.20	8
Single-phase 200 V	SGDS-A5A	0.25	4
	SGDS-01A	0.40	4
	SGDS-02A	0.75	4
	SGDS-04A	1.2	8
	SGDS-08A	2.1	11
Three-phase 200 V	SGDS-10A	2.3	7
	SGDS-15A	3.2	10
	SGDS-20A	4.3	13
	SGDS-30A	5.9	17

* This is the net value at the rated load.

上正科技有限公司
購買、維修、此手冊零組件
電話： 037-466333
Email: service@repairtw.com
Line id: @zzzz
www.repairtw.com

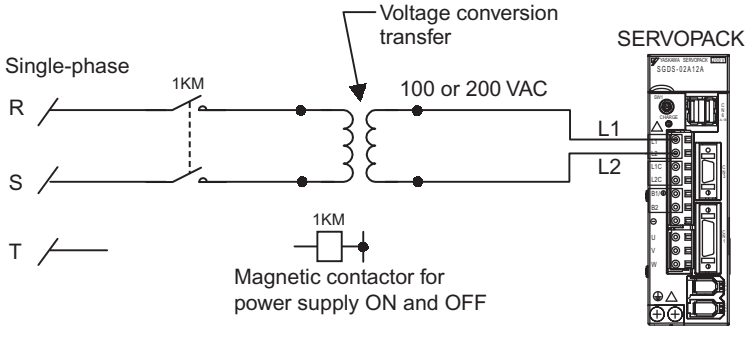

Single-phase Power Supply Connection Example

5.6.5 AC/DC Reactor for Harmonic Suppression

(1) Reactor Types

The SERVOPACK has reactor connection terminals for power supply harmonic suppression. The type of reactor to be connected differs depending on the SERVOPACK capacity. Refer to the following table.

Applicable SERVOPACK Model SGDS-		AC/DC Reactor Model	Reactor Specifications	
			Impedance (mH)	Rated Current (A)
Single-phase, 100 V	A5F	X5053	20.0	2.0
	01F	X5053		
	02F	X5054	5.0	3.0
	04F	X5056	2.0	5.0
Single-phase, 200 V	A5A	X5052	45.0	1.0
	01A	X5052		
	02A	X5053	20.0	2.0
	04A	X5054	5.0	3.0
	08A	X5056	2.0	5.0
Three-phase, 200 V	10A	X5061	2.0	4.8
	15A	Consult Factory	Consult Factory	Consult Factory
	20A	Consult Factory	Consult Factory	Consult Factory
	30A	Consult Factory	Consult Factory	Consult Factory

上正科技有限公司
購買、維修 此手冊零件
電話： 037-466333
Email: service@repairtw.com
Line id: @ruz
www.repairtw.com

Note: Select a proper AC or DC reactor for the input current to the SERVOPACK.
Refer to *2.5.2 Molded-case Circuit Breaker and Fuse Capacity* for input current to each SERVOPACK. For the kind of reactor, refer to *4.4.9 AC/DC Reactors for Power Supplied Designed for Minimum Harmonics*.

(2) Connecting a Reactor

Connect a reactor as shown in the following diagram.

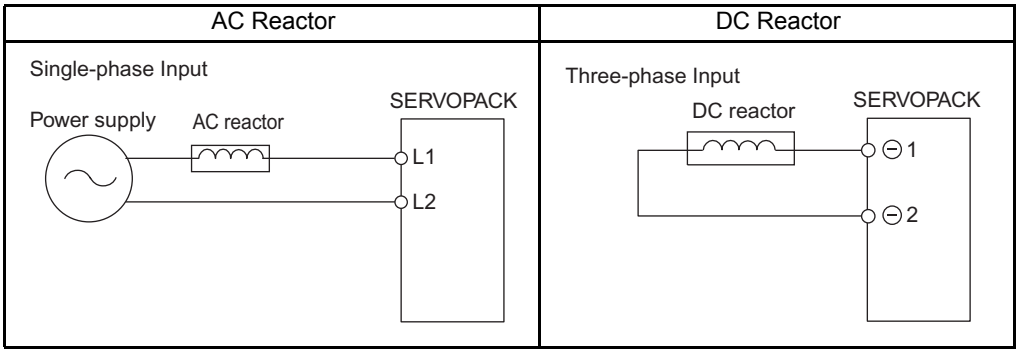

Note: 1. The DC reactor's ⊖1 and ⊖2 terminals are short-circuited before shipment. Remove the lead wire between these two terminals and connect the DC reactor.
2. AC/DC reactor is an option.

5.7 Connecting Regenerative Resistors

5.7.1 Regenerative Power and Regenerative Resistance

The rotational energy of driven machine such as servomotor is returned to the SERVOPACK. This is called regenerative power. The regenerative power is absorbed by charging the smoothing capacitor, but if the amount of power exceeds the capacity of the capacitor, the regenerative power is further consumed by the regenerative resistor.

The servomotor is driven in regeneration state in the following circumstances:

- While decelerating to a stop during acceleration and deceleration operation.
- Continuous descending operation on the vertical axis
- During continuous operation with the servomotor rotated from the load side (negative load).

The SERVOPACKs with a capacity of the single-phase 200 V with 30 to 400 W or 100 V with 50 to 400 W do not have built-in regenerative resistors. If the operation exceeds the rotating speed specifications shown in the *3.5.3 Load Moment of Inertia*, connect an external regenerative resistor.

5.7.2 Connecting Externally Regenerative Resistors

(1) Necessity of External Regenerative Resistors

SERVOPACK Capacity	Necessity of External Regenerative Resistors
400 W or less	No built-in regenerative resistor is provided, however, normally an external regenerative resistor is not required. Install external regenerative resistors when the smoothing capacitor in SERVOPACK cannot process all the regenerative power.
1.0 to 3.0 kW	A built-in regenerative resistor is provided as standard. Install external regenerative resistors when the built-in regenerative resistor cannot process all the regenerative power.

上正科技有限公司
購買、維修 此手冊零組件
電話：037-466333
Email: service@repairtw.com
Line id: @zzzz
www.repairtw.com

(2) Specifications of Built-in Regenerative Resistor

If the amount of regenerative energy exceeds the processing capacity of the SERVOPACK, then install an external regenerative resistor. The following table shows the specifications of the SERVOPACK's built-in resistor and the amount of regenerative power (average values) that it can process.

Main Circuit Power	SERVOPACK Model		Specifications of Built-in Resistor		Regenerative Power Processed by Built-in Resistor * (W)	Minimum Allowable Resistance (Ω)
	Capacity (kW)	SGDS-	Resistance (Ω)	Capacity (W)		
Single-phase 100 V	0.05	A5F	not available	not available	–	40
	0.10	01F				
	0.20	02F				
	0.40	04F				
Single-phase 200 V	0.05	A5A	not available	not available	–	
	0.10	01A				
	0.20	02A				
	0.40	04A				
	0.80	08A	50	60	12	
Three-phase 200 V	1.0	10A		60	12	
	1.5	15A	30	70	14	20
	2.0	20A	25	140	28	12
	3.0	30A	12.5	140	28	12

* The average regenerative power that can be handled is 20% of the rated capacity of the regenerative resistor built into the SERVOPACK.

(3) Precautions on Selecting External Regenerative Resistors

- A built-in regenerative resistor is provided for 500 W to 1.0 kW SGDS SERVOPACKs as standard. When installing an external regenerative resistor in the SERVOPACK, make sure that the resistance is the same as that of the SERVOPACK's built-in resistor.
- If combining multiple small-capacity regenerative resistors to increase the regenerative resistor capacity (W), select resistors so that the resistance value including error is at least as high as the minimum allowable resistance shown in the preceding table.
  Connecting a regenerative resistor with the resistance smaller than the minimum allowable resistance may increase the current flow in the regeneration circuit, resulting in damage to the circuit.

(4) Parameter Setting

Pn600	Regenerative Resistor Capacity			Speed / Position / Torque
	Setting Range	Unit	Factory Setting	Setting Validation
	0 to SERVOPACK capacity	10 W	0 W	Immediately

Be sure to set this parameter when installing an external regenerative resistor in the SERVOPACK.
When set to the factory setting of "0," the SERVOPACK's built-in resistor has been used.
Set the regenerative resistor capacity within tolerance value. When the set value is improper, alarm A.320 is not detected normally. Also, do not set other than 0 without connecting the regenerative resistor because alarm A.300 or A.330 may be detected.

上正科技有限公司
購買、維修 此手冊零組件
電話： 037-466333
Email: service@repairtw.com
Line id: @zzzz
www.repairtw.com

IMPORTANT

1. When resistors for power are used at the rated load ratio, the resistor temperature increases to between 200 °C and 300 °C. The resistors must be used at or below the rated values. Check with the manufacturer for the resistor's load characteristics. Use regenerative resistors at no more than 20% of the rated load ratio with natural convection cooling, and no more than 50% of the rated load ratio with forced air cooling.
   Example: Set 20 W (100 W × 20%) For the 100 W external regenerative resistor with natural cooling method: Pn600 = 2 (units: 10 W)
2. For safety's sake, use the resistors with thermoswitches.

(5) Connecting Regenerative Resistors

(a) SERVOPACKs with Capacities of 400 W or Less

Connect an external regenerative resistor between B1/⊕ and B2 terminals.

Note: The user must provide the regenerative resistor.

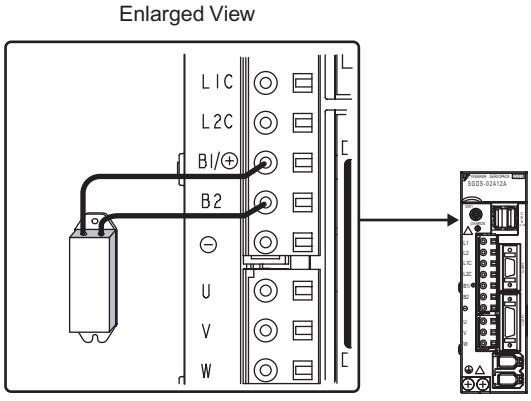

(b) SERVOPACKs with Capacities Larger than 400W

Disconnect the wiring between the SERVOPACK's B2 and B3 terminals and connect an external regenerative resistor between the B1/⊕ and B2 terminals.
The user must provide the regenerative resistor.

Note: Be sure to take out the lead wire between the B2 and B3 terminals.

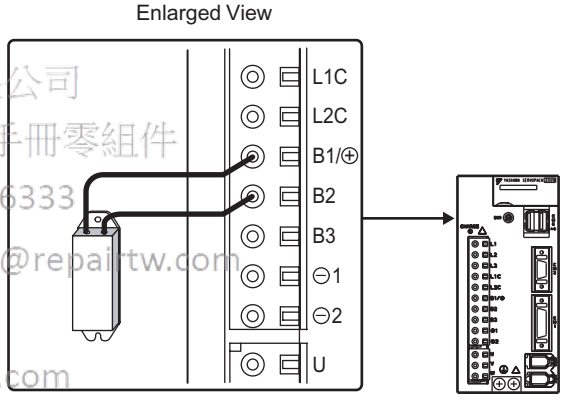

上中科技有限公司
購買、維修 此手冊零組件
電話： 037-466333
Email: service@repairtw.com
Line id: @zzzz
www.repairtw.com

IMPORTANT

Do not touch the regenerative resistors because they reach high temperatures. Use heat-resistant, non-flammable wiring and make sure that the wiring does not touch the resistors. Refer to *4.1 SERVOPACK Main Circuit Wire Size* for connecting wire size when connecting an external regenerative resistor.

上正科技有限公司
購買、維修 此手冊零組件
電話： 037-466333
Email: service@repairtw.com
Line id: @zzzz
www.repairtw.com

6

MECHATROLINK II Communications

6.1 Specifications and Configuration - 6-3
6.1.1 Specifications - 6-3
6.1.2 System Configuration - 6-3

6.2 Switches for MECHATROLINK II Communications Settings - 6-4
6.2.1 Communications Settings - 6-4
6.2.2 Setting the Transmission Cycle - 6-4
6.2.3 Setting the Station Address - 6-5

6.3 Main Commands - 6-6
6.3.1 No Operation (NOP: 00H) - 6-6
6.3.2 Read Parameter (PRM_RD: 01H) - 6-7
6.3.3 Write Parameter (PRM_WR: 02H) - 6-8
6.3.4 Read ID (ID_RD: 03H) - 6-9
6.3.5 Set Up Device (CONFIG: 04H) - 6-10
6.3.6 Read Alarm or Warning (ALM_RD: 05H) - 6-11
6.3.7 Clear Alarm or Warning (ALM_CLR: 06H) - 6-13
6.3.8 Start Synchronous Communications (SYNC_SET: 0DH) - 6-14
6.3.9 MECHATROLINK II Connection (CONNECT: 0EH) - 6-15
6.3.10 Disconnection (DISCONNECT: 0FH) - 6-16
6.3.11 Read Non-volatile Parameter (PPRM_RD: 1BH) - 6-17
6.3.12 Write Non-volatile Parameter (PPRM_WR: 1CH) - 6-18
6.3.13 Set Coordinates (POS_SET: 20H) - 6-19
6.3.14 Apply Brake (BRK_ON: 21H) - 6-20
6.3.15 Release Brake (BRK_OFF: 22H) - 6-21
6.3.16 Turn Sensor ON (SENS_ON: 23H) - 6-22
6.3.17 Turn Sensor OFF (SENS_OFF: 24H) - 6-23
6.3.18 Stop Motion (HOLD: 25H) - 6-24
6.3.19 Request Latch Mode (LTMOD_ON: 28H) - 6-25
6.3.20 Release Latch Mode (LTMOD_OFF: 29H) - 6-26
6.3.21 Status Monitoring (SMON: 30H) - 6-27
6.3.22 Servo ON (SV_ON: 31H) - 6-28
6.3.23 Servo OFF (SV_OFF: 32H) - 6-29
6.3.24 Interpolation Feed (INTERPOLATE: 34H) - 6-30
6.3.25 Positioning (POSING: 35H) - 6-31
6.3.26 Constant Speed Feed (FEED: 36H) - 6-32

上詮科技有限公司
購買、維修 此手冊零組件
電話： 037-466333
Email: service@repairtw.com
Line ID: @ezzz
www.repairtw.com

6.3.27 Interpolation Feeding with Position Detection (LATCH: 38H) - - - - - -6-33
6.3.28 External Input Positioning (EX_POSING: 39H) - - - - - - - - - - - - - - -6-34
6.3.29 Homing (ZRET: 3AH) -6-36
6.3.30 Velocity Control (VELCTRL: 3CH) -6-38
6.3.31 Torque Control (TRQCTRL: 3DH) -6-39
6.3.32 Adjusting (ADJ: 3EH) -6-40
6.3.33 General-purpose Servo Control (SVCTRL: 3FH) - - - - - - - - - - - - - -6-41
6.3.34 MECHATROLINK Connection (CONNECT: 0EH) - - - - - - - - - - - - - - -6-43

6.4 Subcommands - 6-44
6.4.1 No Operation (NOP: 00H) -6-44
6.4.2 Read Parameter (PRM_RD: 01H) -6-44
6.4.3 Write Parameter (PRM_WR: 02H) -6-45
6.4.4 Read Alarm or Warning (ALM_RD: 05H) -6-45
6.4.5 Read Non-volatile Parameter (PPRM_RD: 1CH) - - - - - - - - - - - - - - -6-46
6.4.6 Write Non-volatile Parameter (PPRM_WR: 1CH) - - - - - - - - - - - - - - -6-46
6.4.7 Request Latch Mode (LTMOD_ON: 28H) -6-47
6.4.8 Release Latch Mode (LTMOD_OFF: 29H) -6-47
6.4.9 Status Monitoring (SMON: 30H) -6-48

6.5 Command Data Field - 6-49
6.5.1 Latch Signal Field Specifications: LT_SGN -6-49
6.5.2 Option Field Specifications: OPTION -6-50
6.5.3 Status Field Specifications: STATUS -6-51
6.5.4 Monitor Selection and Monitor Information Field Specifications:
SEL_MON1/2/3/4, MONITOR1/2/3/4 -6-52
6.5.5 IO Monitor Field Specifications: IO_MON -6-53
6.5.6 Substatus Field Specifications: SUBSTATUS - - - - - - - - - - - - - - - - - - -6-54

6.6 Command and Response Timing - 6-55
6.6.1 Command Data Execution Timing -6-55
6.6.2 Monitor Data Input Timing -6-55

6.7 Operation Sequence - 6-56
6.7.1 Operation Sequence for Managing Parameters Using a Controller - -6-56
6.7.2 Operation Sequence for Managing Parameters Using SERVOPACK -6-57
6.7.3 Operation Sequence When Being Servo ON - - - - - - - - - - - - - - - - - -6-58
6.7.4 Operation Sequence When OT (Overtravel Limit Switch) Signal
Is Input- -6-58
6.7.5 Operation Sequence At Emergency Stop (Main Circuit OFF) - - - - - -6-58

上承科技有限公司
購買、維修、此手冊零組件
電話：0877-466333
Email: service@repairtw.com
Line id: @zzzz
www.repairtw.com

6.1 Specifications and Configuration

6.1.1 Specifications

Items that are not described in this chapter are based on the MECHATROLINK application layer. For more details, refer to the following manuals.

- *MECHATROLINK System User's Manual* (SIE-S800-26.1)
- *MECHATROLINK Servo Command User's Manual* (SIE-S800-26.2)

6.1.2 System Configuration

The following illustration shows system configuration. Refer to *5.4.3 Precautions for Wiring MECHATROLINK II Cables* for the number of stations possible to be connected.

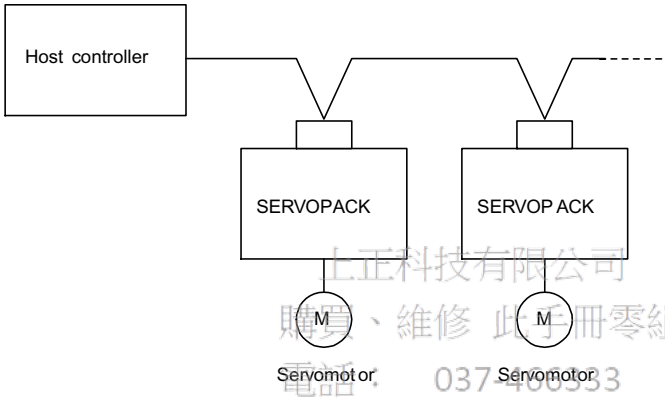

Fig. 6.1 System Configuration

上正科技有限公司
購買、維修 此手冊零組件
電話: 037-466333
Email: service@repairtw.com
Line id: @zzzz
www.repairtw.com

6.2 Switches for MECHATROLINK II Communications Settings

This section describes the switch settings necessary for MECHATROLINK II communications.

6.2.1 Communications Settings

The SW2 DIP switch sets the MECHATROLINK II communications settings, as shown below. Settings that have been changed are enabled when the power is turned OFF and ON.

SW2	Item	Setting	Description	Factory Setting
Bit 1	Baud rate	OFF	4 Mbps	ON
		ON	10 Mbps	
Bit 2	Transmission bytes	OFF	17 bytes	ON
		ON	32 bytes	
Bit 3	Station address	OFF	Station address = 40H+SW1	OFF
		ON	Station address = 50H+SW1	
Bit 4	Reserved	OFF	–	OFF

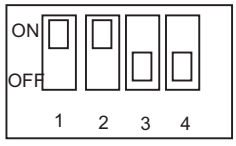

SW2 (factory setting)

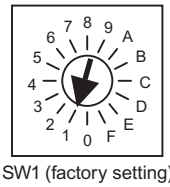

SW1 (factory setting)

上正科技有限公司
購買、維修、此手冊零組件
電話： 037-466333
Email: service@repairtw.com
Line id: @zzzz
www.repairtw.com

IMPORTANT

1. When connecting to a MECHATROLINK network, set bits 1 and 2 to OFF.
2. Baud rate: 4 Mbps, transmission bytes: 30 (bit 1 = OFF, bit 2 = ON) cannot be used.

6.2.2 Setting the Transmission Cycle

The transmission cycle and number of stations that can be set with the SERVOPACK are shown below.

Table 6.1 Transmission Cycle, Transmission Bytes, and Max. Number of Stations

Transmission Bytes	Transmission Cycle								
	0.25 ms*	0.5 ms	1.0 ms	1.5 ms	2.0 ms	2.5 ms	3.0 ms	3.5 ms	4.0 ms
17	2	6	14	23	30	30	30	30	30
30	0	3	8	14	20	25	30	30	30

Note: 1. When the number of stations actually connected is less than the max. number of stations, the remaining channels can be used as communications retry channels. (Number of communications retry channels = Max. number of stations - Number of actual stations connected+1)
2. When not using communications retry, the max. number of stations is increased by one.
3. When connecting the C2 master, the max. number of stations is decreased by one.

6.2.3 Setting the Station Address

The station address is set as shown in Table 4.2, using the rotary switch (SW1) and piano switch (SW2 bit 3). Settings that have been changed are enabled when the power is turned OFF and ON. The factory setting for the station address is 41H (SW2 bit 3 = OFF, SW1 = 1).

Table 6.2 Station Address Settings

Bit 3 of SW2	SW1	Station Address	Bit 3 of SW2	SW1	Station Address
OFF	0	Disabled	ON	0	50H
OFF	1	41H	ON	1	51H
OFF	2	42H	ON	2	52H
OFF	3	43H	ON	3	53H
OFF	4	44H	ON	4	54H
OFF	5	45H	ON	5	55H
OFF	6	46H	ON	6	56H
OFF	7	47H	ON	7	57H
OFF	8	48H	ON	8	58H
OFF	9	49H	ON	9	59H
OFF	A	4AH	ON	A	5AH
OFF	B	4BH	ON	B	5BH
OFF	C	4CH	ON	C	5CH
OFF	D	4DH	ON	D	5DH
OFF	E	4EH	ON	E	5EH
OFF	F	4FH	ON	F	5FH

上正科技有限公司
購買、維修 工手冊零組件
電話： 037-466333
Email: service@repairtw.com
Line id: @zzzz
www.repairtw.com

6.3 Main Commands

The following sections describe main command specific items that are unique to the SGDS-□□□12A.

The MECHATROLINK II main commands are upwardly compatible with the MECHATROLINK commands. They use the first to the twenty nineteenth bytes of the command and response data. 03H is set in command byte 0, and 01H is returned to response byte 0.

6.3.1 No Operation (NOP: 00H)

<table>
<tr><th rowspan="2">Byte</th><th colspan="2">NOP</th><th colspan="4" rowspan="2">Description</th></tr>
<tr><th>Command</th><th>Response</th></tr>
<tr><td>1</td><td>00H</td><td>00H</td><td>Processing classifications</td><td>Network command group</td><td>Synchronization classifications</td><td>Asynchronous</td></tr>
<tr><td>2</td><td rowspan="15"></td><td>ALARM</td><td>Processing time</td><td>Within transmission cycle</td><td>Subcommand</td><td>Can be used.</td></tr>
<tr><td>3</td><td>STATUS</td><td colspan="4" rowspan="15">• Returns the status of the ALM, WARNG, and CMDRDY in STATUS bytes only. All other bits are not used. The response will be NOP when the power is turned ON until initialization has been completed, and during this time, the following status will be returned: CMDRDY: 0.
• Can be used during any phase.</td></tr>
<tr><td>4</td><td rowspan="14"></td></tr>
<tr><td>5</td></tr>
<tr><td>6</td></tr>
<tr><td>7</td></tr>
<tr><td>8</td></tr>
<tr><td>9</td></tr>
<tr><td>10</td></tr>
<tr><td>11</td></tr>
<tr><td>12</td></tr>
<tr><td>13</td></tr>
<tr><td>14</td></tr>
<tr><td>15</td></tr>
<tr><td>16</td><td>WDT</td><td>RWDT</td></tr>
<tr><td>17</td><td rowspan="13">For subcommands. Refer to 6.4 Subcommands.</td><td rowspan="13">For subcommands. Refer to 6.4 Subcommands.</td></tr>
<tr><td>18</td></tr>
<tr><td>19</td></tr>
<tr><td>20</td></tr>
<tr><td>21</td></tr>
<tr><td>22</td></tr>
<tr><td>23</td></tr>
<tr><td>24</td></tr>
<tr><td>25</td></tr>
<tr><td>26</td></tr>
<tr><td>27</td></tr>
<tr><td>28</td></tr>
<tr><td>29</td></tr>
</table>

上正科技有限公司
購買、維修 此手冊零組件
電話： 037-466333
Email: service@repairtw.com
Line id: @zzzz
www.repairtw.com

6.3.2 Read Parameter (PRM_RD: 01H)

<table>
<tr><th rowspan="2">Byte</th><th colspan="2">PRM_RD</th><th colspan="4" rowspan="2">Description</th></tr>
<tr><th>Command</th><th>Response</th></tr>
<tr><td>1</td><td>01H</td><td>01H</td><td>Processing classifications</td><td>Data communications command group</td><td>Synchronization classifications</td><td>Asynchronous</td></tr>
<tr><td>2</td><td rowspan="3"></td><td>ALARM</td><td>Processing time</td><td>Refer to the following table</td><td>Subcommand</td><td>Cannot be used</td></tr>
<tr><td>3</td><td rowspan="2">STATUS</td><td colspan="4" rowspan="15">• Reads current operating parameters. The latest setting value, however, is read for offline parameters. (The setting value is enabled with the Set Up Device command (CONFIG).)
• Can be used during any phase.
• A warning will occur and the command will be ignored in the following cases. If a warning occurs, PARAMETER will not be dependable.
- If a Digital Operator is connected: Command warning1 (A.95A)
- If NO is not within range: Data setting warning 1 (A.94A)
- If SIZE does not match: Data setting warning 4 (A.94D)
• For details on NO and SIZE, refer to 11.2.2 List of Parameters.
• Processing time
Pn8**: 05 ms
Pn0** to Pn6**: 4 ms to 6 ms</td></tr>
<tr><td>4</td></tr>
<tr><td>5</td><td rowspan="2">NO</td><td rowspan="2">NO</td></tr>
<tr><td>6</td></tr>
<tr><td>7</td><td>SIZE</td><td>SIZE</td></tr>
<tr><td>8</td><td rowspan="8"></td><td rowspan="8">PARAMETER</td></tr>
<tr><td>9</td></tr>
<tr><td>10</td></tr>
<tr><td>11</td></tr>
<tr><td>12</td></tr>
<tr><td>13</td></tr>
<tr><td>14</td></tr>
<tr><td>15</td></tr>
<tr><td>16</td><td>WDT</td><td>RWDT</td></tr>
</table>

上正科技有限公司
購買、維修 此手冊零組件
電話： 037-466333
Email: service@repairtw.com
Line id: @zzzz
www.repairtw.com

6.3.3 Write Parameter (PRM_WR: 02H)

Byte	PRM_WR		Description			
	Command	Response				
1	02H	02H	Processing classifications	Data communications command group	Synchronization classifications	Asynchronous
2		ALARM	Processing time	Refer to the following table	Subcommand	Cannot be used
3		STATUS	• Temporarily writes parameters and does not store them in E^2PROM memory. Offline parameters are enabled with the Set Up Device command (CONFIG) transmission after setting. • Can be used during phases 2 and 3. • A warning will occur and the command will be ignored in the following cases. - During phases other than phases 2 and 3: Command warning1 (A.95A) - If a Digital Operator is connected: Command warning 1 (A.95A) - If NO is not within range: Data setting warning 4 (A.94D) - If SIZE does not match: Data setting warning 2 (A.94B) - If PARAMETER is not within range: Data setting warning 2 (A.94B) - A calculation error: Data setting warning 3 (A.94C) • For details on NO, SIZE, and PARAMETER, refer to *11.2.2 List of Parameters*.			
4						
5	NO	NO				
6						
7	SIZE	SIZE				
8	PARAMETER	PARAMETER				
9						
10						
11						
12						
13						
14						
15						
16	WDT	RWDT				

上正科技有限公司
購買、維修 此手冊零組件
電話： 037-466333
Email: service@repairtw.com
Line id: @zzzz
www.repairtw.com

6.3.4 Read ID (ID_RD: 03H)

Byte	ID_RD		Description			
	Command	Response				
1	03H	03H	Processing classifications	Data communications command group	Synchronization classifications	Asynchronous
2		ALARM	Processing time	Within communication cycle	Subcommand	Cannot be used
3		STATUS	• Reads the ID. The corresponding DEVICE_COD is shown in the table on the following page. • Can be used during any phase.			
4						
5	DEVICE_COD	DEVICE_COD				
6	OFFSET	OFFSET				
7	SIZE	SIZE				
8		ID				
9						
10						
11						
12						
13						
14						
15						
16	WDT	RWDT				

上正科技有限公司
購買、維修 此手冊零組件
電話： 037-466333
Email: service@repairtw.com
Line id: @zzzz
www.repairtw.com

- Details of DEVICE_COD

The contents of IDs that can be read are as follows:

Type/Name		OFFSET / DEVICE_COD	00	01	02	03	04	05	06	07	08	09	0A	0B	0C	0D	0E	0F	10
SERVO-PACK	Model	00H	S	G	D	H	–	*1	*1	*2	E	*5	*5	*5	00				
	Soft-ware Ver.	02H	Ver.																
Encoder Software Ver.		12H																	
Motor Model		20H	S	G	M	*3	H	–	*1	*1	*2	*4	00						
NS115	Model	50H	J	U	S	P	-	N	S	1	0	0	*5	*5	*5	00			
	Soft-ware Ver.	52H	Ver.																

*1: Rated output, *2: Power supply voltage specifications, *3: Type of mounted, *4: Y specifications number, *5: Type of motor, *6: Power supply voltage, *7: Type of serial encoder, *8: Design revision order, *9: Shaft end specifications.

Note: 1. Model numbers appear in ASCII code, with the last section as “00.”
2. The software version is binary data.
3. Spaces indicate unspecified data.
4. If the encoder cable is not connected, the motor model and the encoder version are “00”.

6.3.5 Set Up Device (CONFIG: 04H)

Byte	CONFIG		Description			
	Command	Response				
1	04H	04H	Processing classifications	Control command group	Synchronization classifications	Asynchronous
2		ALARM	Processing time	Within 4 s + α*	Subcommand	Cannot be used
3		STATUS	• Recalculates all currently set parameters and initializes positions, signals, etc. • Can be used during phases 2 and 3. • The SERVOPACK will change to Servo OFF if this command is received when the SERVOPACK is Servo ON. • A warning will occur and the command will be ignored in the following cases. - During phase 1: Command warning1 (A.95A) - If a Digital Operator is connected: Command warning1 (A.95A)			
4						
5						
6						
7						
8						
9						
10						
11						
12						
13						
14						
15						
16	WDT	RWDT				

* +α is setting of the Brake reference-Servo off delay time set in Pn506 (500 ms max.)

上正科技有限公司
購買、維修、此手冊零組件
電話： 037-466333
Email: service@repairtw.com
Line id: @zzzz
www.repairtw.com

- Status and Output Signal during CONFIG Command Execution

Status and Output Signal	Before CONFIG	During CONFIG	After CONFIG
ALM (status)	Current status	Current status	Current status
CMDRDY (status)	1	0	1
Other status	Current status	Not specified	Current status
ALARM (code)	Alarms currently occurred	Alarms currently occurred	Alarms currently occurred
ALM (CN1 output signal)	Current status	Current status	Current status
/S-RDY (CN1 output signal)	Current status	OFF	Current status
Other output signals	Current status	Not specified	Current status

6.3.6 Read Alarm or Warning (ALM_RD: 05H)

Byte	ALM_RD		Description			
	Command	Response				
1	05H	05H	Processing classifications	Control command group	Synchronization classifications	Asynchronous
2		ALARM	Processing time	Refer to • *Details of ALM_RD_MOD*	Subcommand	Cannot be used
3		STATUS	• Reads the following alarm or warning status. - Current alarm/warning status - Alarm status history* (warning history is not preserved.) • The ALM_RD_MOD specifications are shown in the following table. • Alarm and warning codes are set in ALM_DATA from byte 6 in their order of detection, and 0 is set in the bytes that are blank in the table. Accordingly, the data in byte 6 is for the latest alarm or warning codes. • A warning will occur and the command will be ignored in the following cases. - If a Digital Operator is connected: Command warning1 (A.95A) - If ALM_RD_MOD is not within range: Data setting warning2 (A.94B)			
4						
5	ALM_RD_MOD	ALM_RD_MOD				
6		ALM_DATA				
7						
8						
9						
10						
11						
12						
13						
14						
15						
16	WDT	RWDT				

上正科技有限公司
購買、維修 此手冊零組件
電話： 037-466333
Email: service@repairtw.com
Line Id: @zzzz
www.repairtw.com

* Alarm occurrence history is saved on E^2PROM and will not be lost if power goes OFF.

- Details of ALM_RD_MOD

ALM_RD_MOD	Description	Processing Time
0	Read current alarm/warning status 10 items max. (sixth to fifteenth byte)	Within communication cycle
1	Read alarm status history 10 items max. (sixth to fifteenth byte) (Warning history is not preserved.)	Within 60 ms
2	Gets the detailed information of current alarm or warning one by one. Set the occurrence order from 0 (the latest) to 9 for the alarm index. Byte / Command / Response 6 / Alarm index / Alarm index 7-8 / 0 / Alarm code	Witin 12 ms
3	Gets the detailed information of alarm status history one by one. Set the occurrence order from 0 (the latest) to 9 for the alarm index. Byte / Command / Response 6 / Alarm index / Alarm index 7-8 / 0 / Alarm code	

Each alarm code of the Σ III SERVOPACK is 2-byte long, which includes detailed information such as causes of occurrence in addition to the alarm code of Σ II series SERVOPACK. The data format of alarm code is as follows.

D15-D12	D11-D4	D3-D0
Alarm group (0)	Σ II series SERVOPACK alarm code	Detailed information

Note: 1. When ALM_RD_MOD = 0 or 1, the alarm code (1-byte long) of the Σ II SERVOPACK is returned.
2. When ALM_RD_MOD = 2 or 3, the alarm code (2-byte long) of the Σ III SERVOPACK is returned so that the detailed information is included. The detection order is specified in the alarm index to be read out one by one.

上正科技有限公司
購買、維修 此手冊零組件
電話： 037-466333
Email: service@repairtw.com
Line id: @zzzz
www.repairtw.com

6.3.7 Clear Alarm or Warning (ALM_CLR: 06H)

Byte	ALM_CLR		Description			
	Command	Response				
1	06H	06H	Processing classifications	Control command group	Synchronization classifications	Asynchronous
2		ALARM	Processing time	Refer to • *Details of ALM_CLR_MOD*	Subcommand	Cannot be used
3		STATUS	• Clears the following alarm or warning status. - Current alarm/warning status - Alarm status history * (warning history is not preserved.) • The ALM_CLR_MOD specifications are shown in the following table. • A warning will occur and the command will be ignored in the following cases. - During phases other than phases 2 and 3: Command warning1 (A.95A) - If a Digital Operator is connected: Command warning1 (A.95A) - If ALM_CLR_MOD is not within range: Data setting warning2 (A.94B)			
4						
5	ALM_CLR_MOD	ALM_CLR_MOD				
6						
7						
8						
9						
10						
11						
12						
13						
14						
15						
16	WDT	RWDT				

上正科技有限公司
購買、維修 此手冊零組件
電話： 037-466333
Email: service@repairtw.com
Line Id: @zzzz
www.repairtw.com

* Alarm occurrence history is saved on E^2PROM and will not be lost if power goes OFF.

- Details of ALM_CLR_MOD

ALM_CLR_MODE	Description	Processing Time
0	Clear current alarm/warning status	Within 200 ms
1	Clear alarm status history	Within 2 s

6.3.8 Start Synchronous Communications (SYNC_SET: 0DH)

<table>
<tr><th rowspan="2">Byte</th><th colspan="2">SYNC_SET</th><th colspan="4" rowspan="2">Description</th></tr>
<tr><th>Command</th><th>Response</th></tr>
<tr><td>1</td><td>0DH</td><td>0DH</td><td>Processing classifications</td><td>Network command group</td><td>Synchronization classifications</td><td>Asynchronous</td></tr>
<tr><td>2</td><td rowspan="15"></td><td>ALARM</td><td>Processing time</td><td>Transmission cycle or more</td><td>Subcommand</td><td>Cannot be used</td></tr>
<tr><td>3</td><td>STATUS</td><td colspan="4" rowspan="14">• Starts synchronous communications. Switches from phase 2 to phase 3.
• Processing is completed at the WDT changing edge.
However, if WDT errors are being masked by parameter Pn800.0, processing is completed when this command is received.
• During phase 1, a MECHATROLINK II command warning1 (A.95A) will occur and the command will be ignored.
• During phase 3, the command will be ignored (without a warning).
• The SERVOPACK will change to Servo OFF if this command is received.
• At the occurrence of the following alarms, this command must be transmitted to restart synchronous communications.
- MECHATROLINK II Synchronization Error (A.E50)
- MECHATROLINK II Synchronization Failure (A.E51)
- MECHATROLINK II Communications Error (A.E60)
- MECHATROLINK II Transmission Cycle Error (A.E61)</td></tr>
<tr><td>4</td><td rowspan="2">STATUS</td></tr>
<tr><td>5</td><td rowspan="13"></td></tr>
<tr><td>6</td></tr>
<tr><td>7</td></tr>
<tr><td>8</td></tr>
<tr><td>9</td></tr>
<tr><td>10</td></tr>
<tr><td>11</td></tr>
<tr><td>12</td></tr>
<tr><td>13</td></tr>
<tr><td>14</td></tr>
<tr><td>15</td></tr>
<tr><td>16</td><td>WDT</td><td>RWDT</td></tr>
</table>

上正科技有限公司
購買、維修 此手冊零組件
電話： 037-466333
Email: service@repairtw.com
Line id: @zzzz
www.repairtw.com

6.3.9 MECHATROLINK II Connection (CONNECT: 0EH)

Byte	CONNECT		Description			
	Command	Response				
1	0EH	0EH	Processing classifications	Network command group	Synchronization classifications	Asynchronous
2		ALARM	Processing time	Communications cycle or more	Subcommand	Cannot be used
3		STATUS	• Establishes a MECHATROLINK II connection. Sets the communications mode according to COM_MOD. • VER: Version • Set VER to 21H (Ver. 2.1). • COM_MOD: Communications mode. Refer to the following table. • COM_TIM: Communications cycle Set the multiple number of transmission cycle in the range of 0.5 to 32. When the transmission cycle is 0.5 [ms] ≤ transmission cycle [ms] × COM_TIM ≤ 32 [ms] and the communications cycle is set in multiples of 0.5 ms. • A warning will occur and the command will be ignored in the following cases. - If COM_MOD is not within range: Data setting warning 2 (A.94B) - If COM_TIM is not within range: Data setting warning 2 (A.94B) - If the transmission bytes is 17, and SUBCMD is 1: Data setting warning 2 (A.94B) - If VER is not equal to 21H in the MECHATROLINK communications mode: Data setting warning 2 (A.94B)			
4						
5	VER	VER				
6	COM_MOD	COM_MOD				
7	COM_TIM	COM_TIM				
8						
9						
10						
11						
12						
13						
14						
15						
16	WDT	RWDT				

上正科技有限公司
網頁、維修記錄需要紀錄
電話： 037-466333
Email: service@repairtw.com
Line id: @zzzz
www.repairtw.com

- Details of COM_MOD

D7	D6	D5	D4	D3	D2	D1	D0
SUBCMD	0	0	0	DTMOD		SYNCMOD	0

• SYNCMOD*:
0: Asynchronous communication
1: Synchronous communication
DTMOD: Data transfer method
00, 11: Single transfer
01: Consecutive transfer
SUBCMD:
0: Subcommand not used
1: Subcommand used
• Set the 0 in the other bit.

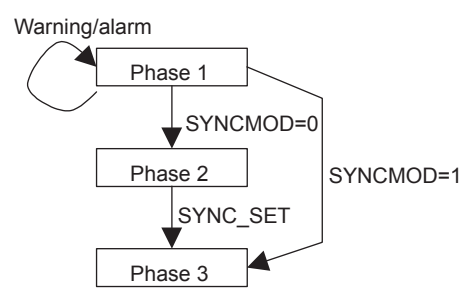

* If SYNCMOD = 0, the SERVOPACK transmits the SYNC_SET command and changes the communications to Phase 3.

6.3.10 Disconnection (DISCONNECT: 0FH)

<table>
<tr><th rowspan="2">Byte</th><th colspan="2">DISCONNECT</th><th colspan="4" rowspan="2">Description</th></tr>
<tr><th>Command</th><th>Response</th></tr>
<tr><td>1</td><td>0FH</td><td>0FH</td><td>Processing classifications</td><td>Network command group</td><td>Synchronization classifications</td><td>Asynchronous</td></tr>
<tr><td>2</td><td rowspan="15"></td><td>ALARM</td><td>Processing time</td><td>Communications cycle or more</td><td>Subcommand</td><td>Cannot be used</td></tr>
<tr><td>3</td><td rowspan="2">STATUS</td><td colspan="4" rowspan="14">• Releases the MECHATROLINK II connection. The SERVOPACK changes communication to phase 1.
• Can be used during any phase.
• When this command is received, the following operations will be performed.
- The SERVOPACK changes communication to phase 1.
- The SERVOPACK changes to Servo OFF.
- The reference point setting will become invalid.
• If the control power supply is turned OFF just when sending this command, a response data will not be able to be sent successfully.</td></tr>
<tr><td>4</td></tr>
<tr><td>5</td><td rowspan="13"></td></tr>
<tr><td>6</td></tr>
<tr><td>7</td></tr>
<tr><td>8</td></tr>
<tr><td>9</td></tr>
<tr><td>10</td></tr>
<tr><td>11</td></tr>
<tr><td>12</td></tr>
<tr><td>13</td></tr>
<tr><td>14</td></tr>
<tr><td>15</td></tr>
<tr><td>16</td><td>WDT</td><td>RWDT</td></tr>
</table>

上正科技有限公司
購買、維修 此手冊零組件
電話： 037-466333
Email: service@repairtw.com
Line id: @zzzz
www.repairtw.com

6.3.11 Read Non-volatile Parameter (PPRM_RD: 1BH)

Byte	PPRM_RD		Description			
	Command	Response				
1	1BH	1BH	Processing classifications	Data communications command group	Synchronization classifications	Asynchronous
2		ALARM	Processing time	Within communications cycle	Subcommand	Cannot be used
3		STATUS	• This command is not supported. • When this command is received, Command warning 2 (A.95B) will occur and the command will be ignored.			
4						
5	NO					
6						
7	SIZE					
8						
9						
10						
11						
12						
13						
14						
15						
16	WDT	RWDT				

上正科技有限公司
購買、維修 此手冊零組件
電話： 037-466333
Email: service@repairtw.com
Line id: @zzzz
www.repairtw.com

6.3.12 Write Non-volatile Parameter (PPRM_WR: 1CH)

Byte	PPRM_WR		Description			
	Command	Response				
1	1CH	1CH	Processing classifications	Data communications command group	Synchronization classifications	Asynchronous
2		ALARM	Processing time	Within 200 ms	Subcommand	Cannot be used
3		STATUS	• Saves parameters in E^2PROM. If parameters are online parameters, those parameters will become effective immediately. Offline parameters are enabled with the Set Up Device command (CONFIG) transmission communication after setting. • Can be used during phases 2 and 3. • A warning will occur and the command will be ignored in the following cases. - During phase 1: Command warning 1 (A.95A) - If communications are being transmitted to a Digital Operator: Command warning 1 (A.95A) - If NO is not within range: Data setting warning1 (A.94A) - If SIZE does not match:Data setting warning 4 (A.94D) - If PARAMETER is not within range: Data setting warning 2 (A.94B) • If the calculation requires too much memory, Data setting warning 3 (A.94C). • For details on NO, SIZE and PARAMETER, refer to the *11.2.2 List of Parameters*.			
4						
5	NO	NO				
6						
7	SIZE	SIZE				
8	PARAMETER	PARAMETER				
9						
10						
11						
12						
13						
14						
15						
16	WDT	RWDT				

上正科技有限公司
購買、維修此手冊零組件
電話： 037-466333
Email: service@repairtw.com
Line id: @zzzz
www.repairtw.com

6.3.13 Set Coordinates (POS_SET: 20H)

Byte	POS_SET		Description			
	Command	Response				
1	20H	20H	Processing classifications	Data communications command group	Synchronization classifications	Asynchronous
2		ALARM	Processing time	Within communication cycle	Subcommand	Cannot be used
3		STATUS	• Sets coordinates. REFE can also enable home position (ZPOINT) and software limits. • Can be used during phases 2 and 3. • PS_SUBCMD: Refer to the following table for coordinate setting modes. • Set position in POS_DATA. • A warning will occur and the command will be ignored in the following cases. - During phase 1: Command warning1 (A.95A) - If a number not within the range is set for PS_SUBCMD: Data setting warning 2 (A.94B)			
4						
5	PS_SUBCMD	PS_SUBCMD				
6	POS_DATA	POS_DATA				
7						
8						
9						
10						
11						
12						
13						
14						
15						
16	WDT	RWDT				

上正科技有限公司
購買、維修 此手冊零組件
電話： 037-466333
Email: service@repairtw.com
Line id: @zzzz
www.repairtw.com

- Details of PS_SUBCMD

D7	D6	D5	D4	D3	D2	D1	D0
REFE	0	0	0	POS_SEL			

- REFE: Sets reference point.
  0: Does not set reference point.
  1: Sets reference point.
  Decides the coordinates, and ZPOINT and software limits are enabled.
- POS_SEL: Selects coordinates.
  3: When APOS (feedback position in machine coordinate system) is selected, POS_DATA is also set in the reference and machine coordinate system.

6.3.14 Apply Brake (BRK_ON: 21H)

Byte	BRK_ON		Description			
	Command	Response				
1	21H	21H	Processing classifications	Control command group	Synchronization classifications	Asynchronous
2		ALARM	Processing time	Within communications cycle	Subcommand	Cannot be used.
3		STATUS	• Applies brake. This command is enabled when the parameter Pn50F.2 is not set to 0. This command is enabled only while the servo is OFF. • Can be used during phases 2 and 3. • A warning will occur and the command will be ignored in the following cases. - During phase 1: MECHATROLINK II command warning1 (A.95A) - If Pn50F.2 is set to 0: Command setting warning 3 (A.95C) • Brake signal output timing 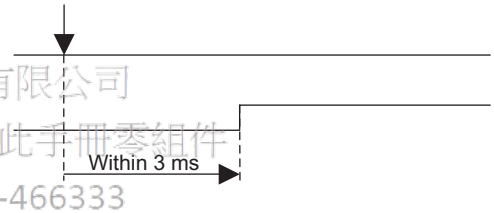 			
4						
5		MONITOR 1				
6						
7						
8						
9		MONITOR 2				
10						
11						
12						
13	SEL_MON 1/2	SEL_MON 1/2				
14		IO_MON				
15						
16	WDT	RWDT				

上正科技有限公司
購買、維修 此手冊零組件
電話： 037-466333
Email: service@repairtw.com
Line id: @zzzz
www.repairtw.com

- Related Parameter

Pn No.	Description
Pn50F.2	/BK signal allocation

6.3.15 Release Brake (BRK_OFF: 22H)

Byte	BRK_OFF		Description			
	Command	Response				
1	22H	22H	Processing classifications	Control command group	Synchronization classifications	Asynchronous
2		ALARM	Processing time	Within communications cycle	Subcommand	Cannot be used
3		STATUS	• Applies brake. This command is enabled when Pn50F.2 is set to 1. • Can be used during phases 2 and 3. • A warning will occur and the command will be ignored in the following cases. - During phase 1: Command warning 1 (A.95A) - If Pn50F.2 is set to 0: Command warning 3 (A.95C) • Brake signal output timing 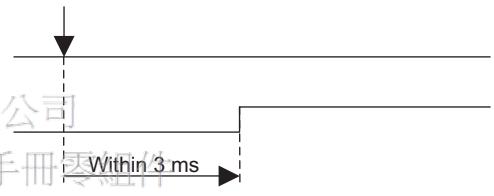 			
4						
5		MONITOR 1				
6						
7						
8						
9		MONITOR 2				
10						
11						
12						
13	SEL_MON1/2	SEL_MON1/2				
14		IO_MON				
15						
16	WDT	RWDT				

上正科技有限公司
購買、維修 此手冊零組件
電話： 037-466333
Email: service@repairtw.com
Line id: @zzzz
www.repairtw.com

- Related Parameter

Pn No.	Description
Pn50F.2	/BK signal

6.3.16 Turn Sensor ON (SENS_ON: 23H)

<table>
<tr><th rowspan="2">Byte</th><th colspan="2">SENS_ON</th><th colspan="4" rowspan="2">Description</th></tr>
<tr><th>Command</th><th>Response</th></tr>
<tr><td>1</td><td>23H</td><td>23H</td><td>Processing classifications</td><td>Control command group</td><td>Synchronization classifications</td><td>Asynchronous</td></tr>
<tr><td>2</td><td rowspan="12"></td><td>ALARM</td><td>Processing time</td><td>Within 1 sec</td><td>Subcommand</td><td>Cannot be used</td></tr>
<tr><td>3</td><td rowspan="2">STATUS</td><td colspan="4" rowspan="12">• Obtains the initial position data and creates the present position when an absolute encoder is used.
• The reference point, home position (ZPOINT), and software limits will be enabled when an absolute encoder is used.
• Can be used during phases 2 and 3.
• If an incremental encoder is being used, the command will be ignored.
• During phase 1, Command warning 1 (A.95A) will occur and the command will be ignored.
• After having used this command, the position data must be monitored and the coordinate system of host controller must be setup.</td></tr>
<tr><td>4</td></tr>
<tr><td>5</td><td rowspan="4">MONITOR 1</td></tr>
<tr><td>6</td></tr>
<tr><td>7</td></tr>
<tr><td>8</td></tr>
<tr><td>9</td><td rowspan="4">MONITOR 2</td></tr>
<tr><td>10</td></tr>
<tr><td>11</td></tr>
<tr><td>12</td></tr>
<tr><td>13</td><td>SEL_MON 1/2</td><td>SEL_MON 1/2</td></tr>
<tr><td>14</td><td rowspan="2"></td><td rowspan="2">IO_MON</td></tr>
<tr><td>15</td></tr>
<tr><td>16</td><td>WDT</td><td>RWDT</td></tr>
</table>

上正科技有限公司
購買、維修 此手冊零組件
電話： 037-466333
Email: service@repairtw.com
Line id: @zzzz
www.repairtw.com

6.3.17 Turn Sensor OFF (SENS_OFF: 24H)

Byte	SENS_OFF		Description			
	Command	Response				
1	24H	24H	Processing classifications	Control command group	Synchronization classifications	Asynchronous
2		ALARM	Processing time	Within 1 sec	Subcommand	Cannot be used
3		STATUS	• Turns sensor OFF. The position data is not specified. • The reference point, home position (ZPOINT), and software limits will be enabled. • Can be used during phases 2 and 3. • If an incremental encoder is being used, the SERVOPACK returns a response without doing any processing. • During phase 1, Command warning 1 (A.95A) will occur and the command will be ignored.			
4						
5		MONITOR 1				
6						
7						
8						
9		MONITOR 2				
10						
11						
12						
13	SEL_MON 1/2	SEL_MON 1/2				
14		IO_MON				
15						
16	WDT	RWDT				

上正科技有限公司
購買、維修 此手冊零組件
電話： 037-466333
Email: service@repairtw.com
Line id: @zzzz
www.repairtw.com

6.3.18 Stop Motion (HOLD: 25H)

Byte	HOLD		Description			
	Command	Response				
1	25H	25H	Processing classifications	Motion command group	Synchronization classifications	Asynchronous
2		ALARM	Processing time	Within communi-cations cycle	Subcommand	Can be used
3	OPTION	STATUS	• From current motion status, performs a deceleration stop and positioning according to the deceleration value set in the parameters. • Can be used during phases 2 and 3. • During phase 1, Command warning 1 (A.95A) will occur and the command will be ignored. • OPTION can be used. Refer to *6.5.2 Option Field Specifications: OPTION* for details. • Use DEN (output complete) to confirm stop completion. • Latch processing, which is dependent on LATCH, EX_POSING, and SVCTRL will be cancelled. • ZRET latch processing and ZRET home position alignment will be cancelled. • Upon completion of this command, the reference position (POS) must be read, and the controller coordinate system must be set up. • The stop method can be selected using HOLD_MOD. 0: Decelerate to a stop according to the deceleration parameter. 1: Stop immediately (output stop).			
4						
5	HOLD_MOD	MONITOR1				
6						
7						
8						
9		MONITOR2				
10						
11						
12						
13	SEL_MON 1/2	SEL_MON 1/2				
14		IO_MON				
15						
16	WDT	RWDT				
17	For subcommands. Refer to *6.4 Subcommands*.	For subcommands. Refer to *6.4 Subcommands*.				
18						
19						
20						
21						
22						
23						
24						
25						
26						
27						
28						
29						

上正科技有限公司
購買、維修 IPC工業電腦
電話： 037-466333
Email: service@repairtw.com
Line id: @zzzz
www.repairtw.com

- Related Parameters

Pn No.	Description
Pn80D	First-step Linear Deceleration Parameter
Pn80E	Second-step Linear Deceleration Parameter
Pn80F	Deceleration Parameter Switching Speed

6.3.19 Request Latch Mode (LTMOD_ON: 28H)

Byte	LTMOD_ON		Description			
	Command	Response				
1	28H	28H	Processing classifications	Control command group	Synchronization classifications	Asynchronous
2	LT_SGN	ALARM	Processing time	Within communications cycle	Subcommand	Can be used
3		STATUS	• Sets the modal latch mode. If a latch signal is input during modal latch mode, position latching will be performed. • Can be used during phases 2 and 3. • During phase 1 Command warning 1 (A.95A) will occur and the command will be ignored.. • A latch signal can be selected using LT_SGN. Refer to 6.5.1 Latch Signal Field Specifications (LT_SGN). • Use CMDRDY = 1 to confirm that the Request Latch Mode command has been received. • It takes 500 µs max. for the Request Latch Mode command to start. • Confirm that L_CMP is 1 in STATUS at the completion of latching. - When there is monitor data such as SMON or POSING appended to the command response, LPOS is forcefully returned to MONITOR2 for one communication cycle. - When there is no monitor data such as PRM_RD or ALM_RD appended to the command response, confirm that L_CMP is 1 in STATUS, then use a command that has monitor data such as SMON in the response and select LPOS to confirm. • Once the latch operation has been performed, it will not be performed again even if a latch signal is input. Send a new LTMOD_ON command. • Interference with another latch mode command - During the execution of a command such as LATCH, ZRET, EX_POSING, or SVCTRL, the LTMOD_ON command cannot be used. If this command is used during the execution of these commands, the warning Command warning 4 (A.95D) will occur.			
4						
5		MONITOR1				
6						
7						
8						
9		MONITOR2				
10						
11						
12						
13	SEL_MON 1/2	SEL_MON 1/2				
14		IO_MON				
15						
16	WDT	RWDT				
17	For subcommands. Refer to *6.4 Subcommands*.	For subcommands. Refer to *6.4 Subcommands*.				
18						
19						
20						
21						
22						
23						
24						
25						
26						
27						
28						
29						

上正科技有限公司
購買、維修此產品請電洽
電話：012-966333
Email: service@repairtw.com
Line id: @3ZZZ
www.repairtw.com

- Related Parameters

Pn No.	Description
Pn511	Input Signal Selections 5
Pn820	Latching Area Upper Limit
Pn822	Latching Area Lower Limit

6.3.20 Release Latch Mode (LTMOD_OFF: 29H)

Byte	LTMOD_OFF		Description			
	Command	Response				
1	29H	29H	Processing classifications	Control command group	Synchronization classifications	Asynchronous
2		ALARM	Processing time	Within communications cycle	Subcommand	Can be used
3		STATUS	• Releases the modal latch mode. • Can be used during phases 2 and 3. • During phase 1 Command warning 1(A.95A) will occur and the command will be ignored. • Check that CMDRDY is 1 to confirm that the Release Latch Mode command has been received. - It takes 500 µs max. for the Release Latch Mode command to start. • Interference with another latch mode command - During the execution of a command such as LATCH, ZRET, EX_POSING, or SVCTRL, the LTMOD_ON command cannot be used. If this command is used during the execution of these commands, the warning Command warning 4 (A.95D) will occur.			
4						
5		MONITOR1				
6						
7						
8						
9		MONITOR2				
10						
11						
12						
13	SEL_MON 1/2	SEL_MON 1/2				
14		IO_MON				
15						
16	WDT	RWDT				
17	For subcommands. Refer to *6.4 Subcommands*.	For subcommands. Refer to *6.4 Subcommands*.				
18						
19						
20						
21						
22						
23						
24						
25						
26						
27						
28						
29						

上正科技有限公司
購買、維修 此手冊零組件
電話： 037-466333
Email: service@repairtw.com
Line id: @zzzz
www.repairtw.com

6.3.21 Status Monitoring (SMON: 30H)

Byte	SMON		Description			
	Command	Response				
1	30H	30H	Processing classifications	Data communications command group	Synchronization classifications	Asynchronous
2		ALARM	Processing time	Within communications cycle	Subcommand	Can be used
3		STATUS	• Reads the current status of the SERVOPACK. • Can be used during phases 2 and 3. • During phase 1, Command warning 1 (A.95A) will occur and the command will be ignored.			
4						
5		MONITOR1				
6						
7						
8						
9		MONITOR2				
10						
11						
12						
13	SEL_MON 1/2	SEL_MON 1/2				
14		IO_MON				
15						
16	WDT	RWDT				
17	For subcommands. Refer to *6.4 Subcommands*.	For subcommands. Refer to *6.4 Subcommands*.				
18						
19						
20						
21						
22						
23						
24						
25						
26						
27						
28						
29						

大正科技有限公司
購買、維修 此手冊零組件
電話： 037-466333
Email: service@repairtw.com
Line id: @zzzz
www.repairtw.com

6.3.22 Servo ON (SV_ON: 31H)

Byte	SV_ON		Description			
	Command	Response				
1	31H	31H	Processing classifications	Control command group	Synchronization classifications	Asynchronous
2		ALARM	Processing time	Use for linear motors: Within 10 ms Excluding above motors : Within 50 ms	Subcommand	Can be used
3	OPTION	STATUS	• The SERVOPACK changes to Servo ON. • Can be used during phases 2 and 3. • Command warning 1 (A.95A) will occur and the command will be ignored in the following cases. - During phase 1 - During alarm occurrence (when ALM of STATUS is 1) - If SENS_ON has not been completed when the absolute encoder is used • OPTION field can be selected. Refer to *6.5.2 Option Field Specifications: OPTION* for details. • When connectiing linear motors not equipped with a pole sensor, it takes 10 seconds max. until the SERVOPACK changes to Servo ON the first time because the pole must be detected. • Upon completion of this command, the reference position (POS) must be read, and the controller coordinate system must be set up.			
4						
5		MONITOR1				
6						
7						
8						
9		MONITOR2				
10						
11						
12						
13	SEL_MON 1/2	SEL_MON 1/2				
14		IO_MON				
15						
16	WDT	RWDT				
17	For subcommands. Refer to *6.4 Subcommands*.	For subcommands. Refer to *6.4 Subcommands*.				
18						
19						
20						
21						
22						
23						
24						
25						
26						
27						
28						
29						

上正科技有限公司
購買、維修批發伺服產品
電話：037-466333
Email: service@repairtw.com
Line id: @zzzz
www.repairtw.com

6.3.23 Servo OFF (SV_OFF: 32H)

Byte	SV_OFF		Description			
	Command	Response				
1	32H	32H	Processing classifications	Control command group	Synchronization classifications	Asynchronous
2		ALARM	Processing time	*	Subcommand	Can be used
3		STATUS	• Turns the SERVOPACK OFF. • Can be used during phases 2 and 3. • During phase 1, a MECHATROLINK II command warning 1 (A.95A) will occur and the command will be ignored. * Processing time is set in Pn506 (Brake reference-servo off delay time) ; 500 ms max.			
4						
5		MONITOR1				
6						
7						
8						
9		MONITOR2				
10						
11						
12						
13	SEL_MON 1/2	SEL_MON 1/2				
14		IO_MON				
15						
16	WDT	RWDT				
17	For subcommands. Refer to *6.4 Subcommands*.	For subcommands. Refer to *6.4 Subcommands*.				
18						
19						
20						
21						
22						
23						
24						
25						
26						
27						
28						
29						

上正科技有限公司
購買、維修 此手冊零組件
電話： 037-466333
Email: service@repairtw.com
Line id: @zzzz
www.repairtw.com

6.3.24 Interpolation Feed (INTERPOLATE: 34H)

Byte	INTERPOLATE		Description			
	Command	Response				
1	34H	34H	Processing classifications	Motion command group	Synchronization classifications	Synchronous
2		ALARM	Processing time	Within communi-cations cycle	Subcommand	Can be used
3	OPTION	STATUS	• Starts interpolation feeding. Speed feed forward (VFF, unit [reference unit/sec]) can be specified simultaneously. • Can be used during phases 2 and 3. • A warning will occur and the command will be ignored in the following cases. - During phases other than phase 3: Command warning 1 (A.95A) - If the SERVOPACK is Servo OFF: Command warning 1 (A.95A) - If the output speed (difference from the previous target position (TPOS) exceeds the limit: Data setting warning 2 (A.94B) - If VFF is not within the setting range: Parameter setting warning (A.94) - OPTION field can be selected. Refer to *6.5.2 Option Field Specifications: OPTION* for details. • Use DEN (output complete) to confirm the completion of position reference output.			
4						
5	TPOS	MONITOR1				
6						
7						
8						
9	VFF	MONITOR2				
10						
11						
12						
13	SEL_MON 1/2	SEL_MON 1/2				
14		IO_MON				
15						
16	WDT	RWDT				
17	For subcommands. Refer to *6.4 Subcommands*.	For subcommands. Refer to *6.4 Subcommands*.				
18						
19						
20						
21						
22						
23						
24						
25						
26						
27						
28						
29						

上正科技有限公司
購買、維修 此手冊零組件
電話： 037-466333
Email: service@repairtw.com
Line id: @zzzz
www.repairtw.com

6.3.25 Positioning (POSING: 35H)

Byte	POSING		Description			
	Command	Response				
1	35H	35H	Processing classifications	Motion command group	Synchronization classifications	Asynchronous
2		ALARM	Processing time	Within communi-cations cycle	Subcommand	Can be used
3	OPTION	STATUS	• Performs positioning at the target position (TPOS) using the target speed (TSPD). • Can be used during phases 2 and 3. • A warning will occur and the command will be ignored in the following cases. - During phase 1: Command warning 1 (A.95A) - If the SERVOPACK is Servo OFF: Command warning 1 (A.95A) - If the target speed (TSPD) exceeds the limit: Data setting warning 2 (A.94B) • OPTION field can be selected. Refer to *6.5.2 Option Field Specifications: OPTION* for details. • The target position (TPOS) is a signed 4 bytes. It is set using an absolute position in the reference coordinate system. • The target speed (TSPD) is an unsigned 4 bytes. Setting ranges from 0 to the limit value [reference unit/s]. • Changes can be made to the target position and target speed during movement. • Use DEN (output complete) to confirm the completion of position reference output.			
4						
5	TPOS	MONITOR1				
6						
7						
8						
9	TSPD	MONITOR2				
10						
11						
12						
13	SEL_MON 1/2	SEL_MON 1/2				
14		IO_MON				
15						
16	WDT	RWDT				
17	For subcommands. Refer to *6.4 Subcommands*.	For subcommands. Refer to *6.4 Subcommands*.				
18						
19						
20						
21						
22						
23						
24						
25						
26						
27						
28						
29						

上正科技有限公司
購買、維修此手冊零組件
電話： 037-466333
Email: service@repairtw.com
Line id: @zzzz
www.repairtw.com

- Related Parameters

Pn No.	Description
Pn80A	First-step Linear Acceleration Parameter
Pn80B	Second-step Linear Acceleration Parameter
Pn80C	Acceleration Parameter Switching Speed
Pn80D	First-step Linear Deceleration Parameter
Pn80E	Second-step Linear Deceleration Parameter
Pn80F	Deceleration Parameter Switching Speed

6.3.26 Constant Speed Feed (FEED: 36H)

Byte	FEED		Description			
	Command	Response				
1	36H	36H	Processing classifications	Motion command group	Synchronization classifications	Asynchronous
2		ALARM	Processing time	Within communications cycle	Subcommand	Can be used
3	OPTION	STATUS	• Performs constant speed feeding using the target speed (TSPD). The servo controls the position. Use the Stop Motion command (HOLD: 25H) to stop the constant speed feeding. • Can be used during phases 2 and 3. • A command warning will occur and the command will be ignored in the following cases. - During phase 1: Command warning 1 (A.95A) - If the SERVOPACK is Servo OFF: Command warning 1 (A.95A) - If the target speed (TSPD) exceeds the limit: Data setting warning 2 (A.94B) • OPTION field can be used. Refer to *6.5.2 Option Field Specifications: OPTION* for details. • The target speed (TSPD) is a signed 4 bytes. The direction is determined by the sign. Setting ranges from a negative limit value to a positive limit value [reference unit/s]. • Changes can be made to the target speed during movement. • Use DEN (output complete) to confirm the completion of position reference output.			
4						
5		MONITOR1				
6						
7						
8						
9	TSPD	MONITOR2				
10						
11						
12						
13	SEL_MON 1/2	SEL_MON 1/2				
14		IO_MON				
15						
16	WDT	RWDT				
17	For subcommands. Refer to *6.4 Subcommands*.	For subcommands. Refer to *6.4 Subcommands*.				
18						
19						
20						
21						
22						
23						
24						
25						
26						
27						
28						
29						

上正科技有限公司
購買 維修 找手冊零組件
電話： 037-466333
Email: service@repairtw.com
Line id: @zzzz
www.repairtw.com

- Related Parameters

Pn No.	Description
Pn80A	First-step Linear Acceleration Parameter
Pn80B	Second-step Linear Acceleration Parameter
Pn80C	Acceleration Parameter Switching Speed
Pn80D	First-step Linear Deceleration Parameter
Pn80E	Second-step Linear Deceleration Parameter
Pn80F	Deceleration Parameter Switching Speed

6.3.27 Interpolation Feeding with Position Detection (LATCH: 38H)

Byte	LATCH		Description			
	Command	Response				
1	38H	38H	Processing classifications	Motion command group	Synchronization classifications	Synchronous
2	LT_SGN	ALARM	Processing time	Within communi-cations cycle	Subcommand	Can be used
3	OPTION	STATUS	• Performs interpolation feeding and latches the position using the latch signal specified in LT-SGN. Sends speed feedforward (VFF, unit [reference unit/sec]) simultaneously, too. • If the latch signal is input, the position when the signal is received is recorded as the feedback latch position (LPOS) of the machine coordinate system, and the LPOS will forcibly be indicated as the MONITOR2 for one communications cycle. • Can be used during phases 2 and 3. • A command warning will occur and the command will be ignored in the following cases. - During phases other than phase 3: Command warning 1 (A.95A) - If the SERVOPACK is Servo OFF: Command warning 1 (A.95A) - If the output speed (difference from the previous target position (TPOS)) exceeds the limit: Data setting warning 2 (A.94B) • LT_SGN can be used. Refer to *6.5.1 Latch Signal Field Specifications: LT_SGN* (LT_SGN). • OPTION field can be used. Refer to *6.5.2 Option Field Specifications: OPTION* for details. • Use DEN (output complete) to confirm the motion completion. • It takes 500 µs max. for the Request Latch Mode command to start.			
4						
5	TPOS	MONITOR1				
6						
7						
8						
9	VFF	MONITOR2				
10						
11						
12						
13	SEL_MON 1/2	SEL_MON 1/2				
14		IO_MON				
15						
16	WDT	RWDT				
17	For subcommands. Refer to *6.4 Subcommands*.	For subcommands. Refer to *6.4 Subcommands*.				
18						
19						
20						
21						
22						
23						
24						
25						
26						
27						
28						
29						

上正科技有限公司
購買、維修、代理零組件
電話：
Email: service@repairtw.com
Line id: @zzzz
www.repairtw.com

- Related Parameters

Pn No.	Description
Pn511	Input Signal Selections 5
Pn820	Latching Area Upper Limit
Pn822	Latching Area Lower Limit

6.3.28 External Input Positioning (EX_POSING: 39H)

Byte	EX_POSING		Description			
	Command	Response				
1	39H	39H	Processing classifications	Motion command group	Synchronization classifications	Asynchronous
2	LT_SGN	ALARM	Processing time	Within communi-cations cycle	Subcommand	Can be used
3	OPTION	STATUS	• Moves toward the target position (TPOS) at the target speed (TSPD). When a latch signal is input midway, positioning is performed according to the final travel distance for external position specified in the parameter from signal input position. When no latch signal is input, positioning is performed for the target position. • Can be used during phases 2 and 3. • A command warning will occur and the command will be ignored in the following cases. - During phase 1: Command warning 1 (A.95A) - If the SERVOPACK is Servo OFF: Command warning 1 (A.95A) - If the target speed (TSPD) exceeds the limit: Data setting warning 2 (A.94B) • OPTION field can be used. Refer to *6.5.2 Option Field Specifications: OPTION* for details. • The target position (TPOS) is a signed 4 bytes [reference unit]. It is set using an absolute position in the reference coordinate system. • The target speed (TSPD) is an unsigned 4 bytes. It is set using 0 to limit value [reference unit/s]. • After the latch is input, any changes to the target position during motion will be ignored. • Use DEN (output complete) to confirm the completion of position reference output. • It takes 500 µs max. for the Request Latch Mode command to start.			
4						
5	TPOS	MONITOR1				
6						
7						
8						
9	TSPD	MONITOR2				
10						
11						
12						
13	SEL_MON 1/2	SEL_MON 1/2				
14		I/O_MON				
15						
16	WDT	RWDT				
17	For subcommands. Refer to *6.4 Subcommands*.	For subcommands. Refer to *6.4 Subcommands*.				
18						
19						
20						
21						
22						
23						
24						
25						
26						
27						
28						
29						

上正科技有限公司
購買 維修 出租 零組件
電話：037-466333
Email: service@repairtw.com
Line id: @777
www.repairtw.com

- Related Parameters

Pn No.	Description	Pn No.	Description
Pn511	Input Signal Selections 5	Pn820	Latching Area Upper Limit
Pn80A	First-step Linear Acceleration Parameter	Pn822	Latching Area Lower Limit
Pn80B	Second-step Linear Acceleration Parameter		
Pn80C	Acceleration Parameter Switching Speed		
Pn80D	First-step Linear Deceleration Parameter		
Pn80E	Second-step Linear Deceleration Parameter		
Pn80F	Deceleration Parameter Switching Speed		
Pn814	Final Travel Distance for External Positioning		

- Operation

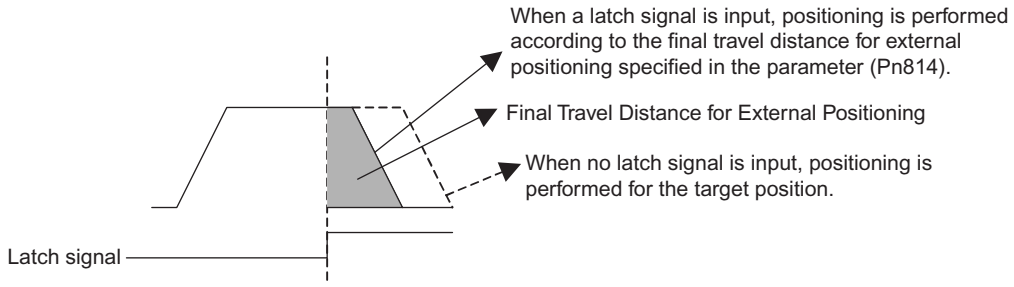

上正科技有限公司
購買、維修 此手冊零組件
電話： 037-466333
Email: service@repairtw.com
Line id: @zzzz
www.repairtw.com

6.3.29 Homing (ZRET: 3AH)

Byte	ZRET		Description			
	Command	Response				
1	3AH	3AH	Processing classifications	Motion command group	Synchronization classifications	Asynchronous
2	LT_SGN	ALARM	Processing time	Within communications cycle	Subcommand	Can be used
3	OPTION	STATUS	• Perform a homing using the following procedure. 1. Accelerates to the target speed (TSPD) in the direction specified in the parameter (Pn816) and continues to move at the target speed. 2. Decelerates to homing approach speed 1 (Pn817) at the DEC = 1. 3. Latch operation will start at the DEC = 0. 4. When a latch signal is input, positioning is performed to define the target position at the homing approach speed 2 (Pn818). The target position is calculated by adding the homing final travel distance (Pn819). After the completion of positioning, the coordinate system is set so that the position reached is 0. • Can be used during phases 2 and 3. • A command warning will occur and the command will be ignored in the following cases. - During phase 1: Command warning 1 (A.95A) - If the SERVOPACK is Servo OFF: Command warning 1 (A.95A) - If the target speed (TSPD) exceeds the limit: Data setting warning 2 (A.94B) • OPTION field can be used. Refer to *6.5.2 Option Field Specifications: OPTION* for details. • The target speed (TSPD) is an unsigned 4 bytes. It is set using 0 to limit value [reference unit/s]. • Before DEC is input, the target speed during motion can be changed. • Use DEN (output complete) and ZPOINT (home position) to confirm the completion of position reference output. • If takes 500 µs max. for the Request Latch Mode command to start.			
4						
5		MONITOR1				
6						
7						
8						
9	TSPD	MONITOR2				
10						
11						
12						
13	SEL_MON 1/2	SEL_MON 1/2				
14		IO_MON				
15						
16	WDT	RWDT				
17	For subcommands use. Refer to *6.4 Subcommands*.	For subcommands use. Refer to *6.4 Subcommands*.				
18						
19						
20						
21						
22						
23						
24						
25						
26						
27						
28						
29						

Note: Refer to *5.3 I/O Signal Connections*.

上正維修有限公司
購買、維修、出售、租賃、零件
電話：037-466333
Email: service@repairtw.com
Line id: @3zzz
www.repairtw.com

- Related Parameters

Pn No.	Description	Pn No.	Description
Pn511	Input Signal Selections 5	Pn820	Latching Area Upper Limit
Pn80A	First-step Linear Acceleration Parameter	Pn822	Latching Area Lower Limit
Pn80B	Second-step Linear Acceleration Parameter		
Pn80C	Acceleration Parameter Switching Speed		
Pn80D	First-step Linear Deceleration Parameter		
Pn80E	Second-step Linear Deceleration Parameter		
Pn80F	Deceleration Parameter Switching Speed		
Pn816	Homing Direction		
Pn817	Homing Approach Speed 1		
Pn818	Homing Approach Speed 2		
Pn819	Final Travel Distance for homing		

- Operation

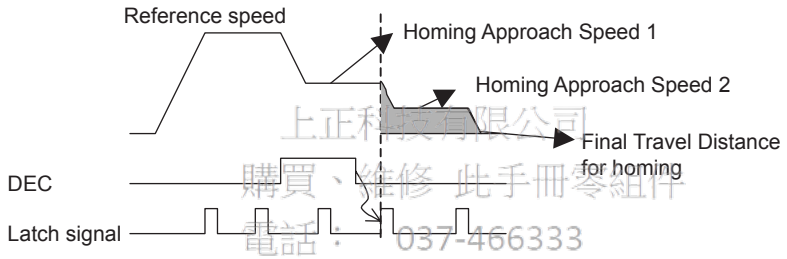

上正科技有限公司
購買、維修 此手冊零組件
電話： 037-466333
Email: service@repairtw.com
Line id: @zzzz
www.repairtw.com

6.3.30 Velocity Control (VELCTRL: 3CH)

Byte	VECTRL		Description			
	Command	Response				
1	3CH	3CH	Processing classifications	Motion command group	Synchronization classifications	Asynchronous
2		ALARM	Processing time	Within communi-cations cycle	Subcommand	Can be used
3	OPTION	STATUS	• Controls speed. (The Servo does not perform position control, but directly controls the speed of the speed loop.) • Can be used during phases 2 and 3. • A warning will occur and the command will be ignored in the following cases. - During phase 1: Command warning 1 (A.95A) • OPTION field can be used. Refer to *6.5.2 Option Field Specifications: OPTION* for details. • VREF (speed reference) is a signed 4 bytes data. The unit for speed reference is [maximum motor speed/40000000H]. The direction is specified by the sign. • Soft-start acceleration/deceleration can also be used by setting the parameters. • During execution of this command, the following bits for STATUS are allocated. D8: ZSPD (zero speed bit) 0: Zero speed not detected 1: Zero speed detected D7: V_CMP (speed coincidence bit) 0: Speed coincidence not detected 1: Speed coincidence detected • Monitor (MONITOR 1, 2, 3, 4) The unit for TSPD, CSPD, and FSDP is [maximum motor speed/40000000H]. • Setting the torque reference option (P_TLIM, N_PLIM, TFF) Setting range: 0 to 4000H (maximum motor torque/4000H) Refer to *page 6-38* for operation details.			
4						
5	P_TLIM /TFF	MONITOR1				
6						
7	N_TLIM					
8						
9	VREF	MONITOR2				
10						
11						
12						
13	SEL_MON 1/2	SEL_MON 1/2				
14		IO_MON				
15						
16	WDT	RWDT				
17	For subcommands. Refer to *6.4 Subcommands*.	For subcommands. Refer to *6.4 Subcommands*.				
18						
19						
20						
21						
22						
23						
24						
25						
26						
27						
28						
29						

上正科技有限公司
購買、維修此手冊零組件
電話：07-466333
Email: service@renaiftw.com
Line id: @zzzz
www.renaiftw.com

- Related Parameters

Pn No.	Description
Pn305	Soft Start Acceleration Time
Pn306	Soft Start Deceleration Time

- Torque Reference Option Operation

Parameter		Desctiption
Pn002	n.□□□**0**	The set value of P_TLIM / N_TLIM is ignored. Set to “0”.
	n.□□□**1**	The set values of P_TLIM and N_TLIM are used as the torque limit value for forward and reverse rotation respectively.
	n.□□□**2**	TFF is used for the torque feed forward. Set N_TLIM to 0.

Note: Pn.002.0 sets the operation of P_TLIM / N_TLIM and TFF.

6.3.31 Torque Control (TRQCTRL: 3DH)

Byte	TRQCTRL		Description			
	Command	Response				
1	3DH	3DH	Processing classifications	Motion command group	Synchronization classifications	Asynchronous
2		ALARM	Processing time	Within communi-cations cycle	Subcommand	Can be used
3	OPTION	STATUS	• The Servo does not perform position control and speed control, but directly performs torque control. • Can be used during phases 2 and 3. • A command warning will occur and the command will be ignored in the following cases. - During phases other than phases 2 and 3: Command warning 1 (A.95A) • OPTION field can be used. Refer to *6.5.2 Option Field Specifications: OPTION* for details. • TOREF TOREF is a torque reference and has signed 4 bytes of data. The unit for torque reference is [maximum motor torque/40000000H]. The direction is specified by the sign. When the designation for TOREF is larger, it is clamped at the maximum torque. • During execution of this command, the following bits of STATUS are allocated. D11: V_LIM (speed limit bit) 0: Speed limit not detected 1: Speed limit detected • MONITOR1, 2, 3, 4 (monitor) The unit for torque is [maximum motor torque/40000000H]. • Setting the speed reference option (VLIM) Setting range: 0 to 40000000H (maximum motor speed/40000000H) Refer to on *page 6-39*.			
4						
5	VLIM	MONITOR1				
6						
7						
8						
9	TQREF	MONITOR2				
10						
11						
12						
13	SEL_MON 1/2	SEL_MON 1/2				
14		IO_MON				
15						
16	WDT	RWDT				
17	For subcommands use. Refer to *6.4 Subcommands*.	For subcommands use. Refer to *6.4 Subcommands*.				
18						
19						
20						
21						
22						
23						
24						
25						
26						
27						
28						
29						

上正科技有限公司
銷賣、維修伺服手冊零組件
電話：03-4663398
Email: service@repairtw.com
Line id: @repairtw
www.repairtw.com

- Related Parameters

Pn No.	Description
Pn407	Speed Limit at Torque Control

- Speed Reference Option Operation

Parameter		Description
Pn002	n.□□**0**□	VLIM is not available. Set VLIM to 0.
	n.□□**1**□	VLIM operates as the speed limit value.

6.3.32 Adjusting (ADJ: 3EH)

Byte	ADJ		Description			
	Command	Response				
1	3EH	3EH	Processing classifications	Compound command group	Synchronization classifications	Asynchronous
2	00H	ALARM	Processing time	Depends on processing	Subcommand	Cannot be used
3		STATUS	• This command is for maintenance. Data monitoring and adjustments can be done. • Use as SUBCODE = 01H. (When SUBCODE = 0, the operation is compatible with SERVOPACKs in the Σ II series.) • Refer to *11.3 Using the Adjusting Command (ADJ: 3EH)*, for the way to use set this command. • A command warning will occur and the command will be ignored in the following cases. - During phase 1: Command warning 1 (A.95A) - If a Digital Operator is connected: Command warning 1 (A.95A)			
4						
5	CCMD	CANS				
6	CADDRESS	CADDRESS				
7						
8	CDATA	CDATA				
9						
10						
11						
12						
13						
14						
15						
16	WDT	RWDT				

上正科技有限公司
購買、維修 此手冊零組件
電話： 037-466333
Email: service@repairtw.com
Line id: @zzzz
www.repairtw.com

6.3.33 General-purpose Servo Control (SVCTRL: 3FH)

Byte	SVCTRL		Description			
	Command	Response				
1	3FH	3FH	Processing classifications	Compound command group	Synchronization classifications	Synchronous, asynchronous
2	SUBCTRL	ALARM	Processing time	Depends on processing	Subcommand	Can be used
3	OPTION	STATUS	• This command is compatible with MECHATROLINK versions before Ver 1.0. It is used to perform the general-purpose servo control. • Latch Processing: Supported. Select the latch signal using L_SGN in the SUBCTRL and set SET_L to 1. When the selected latch signal is input, L_CMP in STATUS will become 1. Perform latch processing again after the SET_L command is set to 0. The latch signal cannot be changed while SET_L is set to 1. • Motion: Any of the motions listed in the following table can be executed. Refer to each motion item for operating specifications. • Sequence Signals: Any of the sequence signals listed in the following table can be executed. Refer to each sequence item for operating specifications. • During phase 1; Command warning 1 (A.95A). A command warning will occur and the command will be ignored in the following cases.			
4						
5	TPOS	MONITOR1				
6						
7						
8						
9	TSPD	MONITOR2				
10	OR					
11	VFF					
12						
13	SEL_MON 1/2	SEL_MON 1/2				
14	SQ_CMD	I/O_MON				
15						
16	WDT	RWDT				
17	For subcommands use. Refer to *6.4 Subcommands*.	For subcommands use. Refer to *6.4 Subcommands*.				
18						
19						
20						
21						
22						
23						
24						
25						
26						
27						
28						
29						

上正科技有限公司
購買、維修 此手冊零組件
電話：037-466333
Email: service@repairtw.com
Line Id: @zzzz
www.repairtw.com

- Sub-control: SUBCTRL

D7	D6	D5	D4	D3	D2	D1	D0
RESERVE 0	MOTION Select motion			RESERVE 0	SET_L Latch command	L_SGN Select latch signal	

Select Latch Signal: LT_SGN

D1	D0	Latch Signal
0	0	Phase C
0	1	EXT1
1	0	EXT2
1	1	EXT3

Select Motion: MOTION

D6	D5	D4	Motion	
0	0	0	HOLD	• During phase 1, Command warning 1 (A.95A) will occur for POSING and FEED, and the commands will be ignored. • For INTERPOLATE, in all other phases except phase 3, Command warning 1 (A.95A) will occur and the command will be ignored.
0	0	1	INTERPOLATE	
0	1	0	FEED	
0	1	1	POSING	

- Sequence Signals: SQ_CMD

D7	D6	D5	D4	D3	D2	D1	D0
RESERVE 0				ACLR Alarm clear	SEN Sensor ON	BRK Brake ON	SON Servo ON

上正科技有限公司
購買、維修 此手冊零組件
電話： 037-466333
Email: service@repairtw.com
Line id: @zzzz
www.repairtw.com

6.3.34 MECHATROLINK Connection (CONNECT: 0EH)

Byte	CONNECT		Description			
	Command	Response				
1	0EH	0EH	Processing classifications	Network command group	Synchronization classifications	Asynchronous
2		ALARM	Processing time	Communications cycle or more	Subcommand	Cannot be used
3		STATUS	• Establishes a MECHATROLINK connection. Sets the communications mode according to COM_MOD. • VER: Version Set VER to 10H (Ver. 1.0). • Subcommand: Cannot be used. COM_MOD: Communications mode. Refer to the following table. • COM_TIM: Communications cycle [ms] Set the multiple number of 2 [ms] in the range of 2 to 32 [ms]. 2 [ms] ≤ COM_TIM ≤ 32 [ms] • A command warning will occur and the command will be ignored in the following cases. - If COM_MOD is not within range: Data setting warning 2 (A.94B) - If COM_TIM is not within range: Data setting warning 2 (A.94B)			
4						
5	VER	VER				
6	COM_MOD	COM_MOD				
7	COM_TIM	COM_TIM				
8						
9						
10						
11						
12						
13						
14						
15						
16	WDT	RWDT				

上正科技有限公司
購買、維修 此手冊零組件
電話： 037-466333
Email: service@repairtw.com
Line id: @zzzz
www.repairtw.com

- Details of COM_MOD

D7	D6	D5	D4	D3	D2	D1	D0
SUBCMD	0	0	0	DTMOD		SYNCMOD	EXMOD

• EXMOD:
0: Standard connection
1: Extended connection
• SYNCMOD*:
0: Asynchronous communications
1: Synchronous communications
• DTMOD:
00,11: Single transfer
01: Consecutive transfer
10: Multiple transfers (not supported)

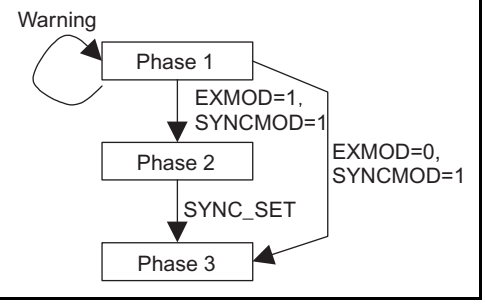

* The SERVOPACK changes communication to phase 2 when EXMOD is set to 1. The SERVOPACK changes communication to phase 3 after SYNC_SET setting.

6.4 Subcommands

This section describes the subcommands for SGDS-□□□12A SERVOPACK. The MECHATROLINK II subcommands can be used for MECHATROLINK II communications by specifying them with the CONNECT command.

They use the seventeenth to the twenty-ninth bytes of the command and response data. (They cannot be used with MECHATROLINK.)

6.4.1 No Operation (NOP: 00H)

Byte	NOP		Description			
	Command	Response	Processing classifications	Network command group	Processing time	Within communications cycle
17	00H	00H	• Not operation command. • This command can be used with any main commands.			
18		Substatus				
19						
20						
21						
22						
23						
24						
25						
26						
27						
28						
29						

上正科技有限公司
購買、維修 此手冊零組件
電話： 037-466333
Email: service@repairtw.com
Line id: @zzzz
www.repairtw.com

6.4.2 Read Parameter (PRM_RD: 01H)

Byte	PRM_RD		Description			
	Command	Response	Processing classifications	Network command group	Processing time	Within 6 ms
17	01H	01H	• Reads the parameters. This command has the same function as the main command PRM_RD. • This command can be used only with the following main commands: NOP, ID-RD, HOLD, LTMOD_ON/OFF, SMON, SV_ON/OFF, INTERPOLATE, POSING, FEED, LATCH, EX_POSING, ZRET, VELCTRL, TRQCTRL			
18		Substatus				
19	NO	NO				
20						
21	SIZE	SIZE				
22		PARAMETER				
23						
24						
25						
26						
27						
28						
29						

6.4.3 Write Parameter (PRM_WR: 02H)

Byte	PRM_WR		Description			
	Command	Response	Processing classifications	Data communications command group	Processing time	Within 6 ms
17	02H	02H	• Writes the parameters. This command has the same function as the main command PRM_WR. • This command can be used only with the following main commands: NOP, ID-RD, HOLD, LTMOD_ON/OFF, SMON, SV_ON/OFF, INTERPOLATE, POSING, FEED, LATCH, EX_POSING, ZRET, VELCTRL, TRQCTRL			
18		Substatus				
19	NO	NO				
20						
21	SIZE	SIZE				
22	PARAMETER	PARAMETER				
23						
24						
25						
26						
27						
28						
29						

上正科技有限公司
購買、維修 此手冊零組件
電話： 03-16333
Email: service@repairtw.com
Line Id: @rrr
www.repairtw.com

6.4.4 Read Alarm or Warning (ALM_RD: 05H)

Byte	ALM_RD		Description			
	Command	Response	Processing classifications	Data communications command group	Processing time	6 ms to 2 s
17	05H	05H	• Reads the alarm or warning. This command has the same function as the main command ALM_RD. • This command can be used only with the following main commands: NOP, ID-RD, HOLD, LTMOD_ON/OFF, SMON, SV_ON/OFF, INTERPOLATE, POSING, FEED, LATCH, EX_POSING, ZRET, VELCTRL, TRQCTRL			
18		Substatus				
19	ALM_RD_MOD	ALM_RD_MOD				
20		ALM_DATA				
21						
22						
23						
24						
25						
26						
27						
28						
29						

6.4.5 Read Non-volatile Parameter (PPRM_RD: 1CH)

Byte	ALM_RD		Description			
	Command	Response	Processing classifications	Data communications command group	Processing time	Within 200 ms
17	1BH	1BH	• This command is not supported.			
18		Substatus				
19	NO	NO				
20						
21	SIZE	SIZE				
22		PARAMETER				
23						
24						
25						
26						
27						
28						
29						

6.4.6 Write Non-volatile Parameter (PPRM_WR: 1CH)

上正科技有限公司
購買、維修 此手冊零組件
電話: 037-466333
Email: service@repairtw.com
line id: @2222
www.repairtw.com

Byte	PPRM_WR		Description			
	Command	Response	Processing classifications	Data communications command group	Processing time	Within 200 ms
17	1CH	1CH	• Writes the parameters. This command has the same function as the main command PPRM_WR. • This command can be used only with the following main commands: NOP, ID-RD, HOLD, LTMOD_ON/OFF, SMON, SV_ON/OFF, INTERPOLATE, POSING, FEED, LATCH, EX_POSING, ZRET, VELCTRL, TRQCTRL			
18		Substatus				
19	NO	NO				
20						
21	SIZE	SIZE				
22	PARAMETER	PARAMETER				
23						
24						
25						
26						
27						
28						
29						

6.4.7 Request Latch Mode (LTMOD_ON: 28H)

Byte	LTMOD_ON		Description			
	Command	Response	Processing classifications	Data communications command group	Processing time	Within communications cycle
17	28H	28H	• Sets the modal latch mode. This command has the same function as the main command LTMOD_ON. • This command can be used only with the following main commands: NOP, SMON, SV_ON/OFF, INTERPOLATE, POSING, FEED, VELCTRL, TRQCTRL			
18	LT_SGN	Substatus				
19	SEL_MON3/4	SEL_MON3/4				
20		MONITOR3				
21						
22						
23						
24		MONITOR4				
25						
26						
27						
28						
29						

上正科技有限公司
購買、維修 此手冊零組件
電話： 03-4663333
Email: service@repairtw.com
Line id: @3333
www.repairtw.com

6.4.8 Release Latch Mode (LTMOD_OFF: 29H)

Byte	LTMOD_OFF		Description			
	Command	Response	Processing classifications	Control command group	Processing time	Within communications cycle
17	29H	29H	• Releases the modal latch mode. This command has the same function as the main command LTMOD_OFF. • This command can be used only with the following main commands: NOP, SMON, SV_ON/OFF, INTERPOLATE, POSING, FEED, VELCTRL, TRQCTRL			
18		Substatus				
19	SEL_MON3/4	SEL_MON3/4				
20		MONITOR3				
21						
22						
23						
24		MONITOR4				
25						
26						
27						
28						
29						

6.4.9 Status Monitoring (SMON: 30H)

Byte	SMON		Description			
	Command	Response	Processing classifications	Data communications command group	Processing time	Within communications cycle
17	30H	30H	• Reads the monitoring information specified in SEL_MON3/4. This command has the same function as the main command SMON. • This command can be used only with the following main commands: NOP, ID-RD, HOLD, LTMOD-ON/OFF, SMON, SV-ON/OFF, INTERPOLATE, POSING, FEED, LATCH, EX-POSING, ZRET, VERCTRL, TRQCTRL			
18		Substatus				
19	SEL_MON3/4	SEL_MON3/4				
20		MONITOR3				
21						
22						
23						
24		MONITOR4				
25						
26						
27						
28						
29						

上正科技有限公司
購買、維修 此手冊零組件
電話： 037-466333
Email: service@repairtw.com
Line id: @zzzz
www.repairtw.com

6.5 Command Data Field

This section describes command data in main commands and subcommands.

6.5.1 Latch Signal Field Specifications: LT_SGN

The latch signal field specifications (LT_SGN) can be designated using the following commands:

LATCH, EX_POSING, ZRET, LTMOD_ON

The latch signal field is used to select latch signals for position data, with the second byte of the above main commands, or the eighteenth byte reserved area of the subcommands.

Refer to the following table for details on bit allocation.

- Latch Signal Field

D7	D6	D5	D4	D3	D2	D1	D0
0	0	0	0	0	0	LT_SGN	

Latch Signal Selection

D1	D0	Latch Signal
0	0	Phase C
0	1	EXT1
1	0	EXT2
1	1	EXT3

上揚科技有限公司
購買、維修 此手冊零組件
電話: 037-466333
Email: service@repairtw.com
Line id: @zzzz
www.repairtw.com

INFO

- EXT1, EXT2, and EXT3 must be allocated to the CN1 input signal using parameter Pn511. If they are not allocated, the latch operation will be undefined.
- The latch operation will also be undefined if phase C is selected for a fully closed encoder that does not use phase C.

6.5.2 Option Field Specifications: OPTION

The option field specifications (OPTION) can be designated using the following main commands:

SV_ON, HOLD, INTERPOLATE, POSING, FEED, LATCH, EX_POSING, ZRET, VELCTRL, TRQCTRL

The option field is used to add motion command functions, with the third to fourth byte reserved area of the above main commands.

Refer to the following table for details on bit allocation.

- Option Field

D7	D6	D5	D4	D3	D2	D1	D0
0	0	0	ACCFIL		0	0	0

D15	D14	D13	D12	D11	D10	D9	D8
N-CL	P-CL	P-PI-CLR	V-PPI	0	0	G-SEL	

Bit	Name	Description	Set Value	Details
D0			0	
D1			0	
D2			0	
D3	ACCFIL	Acceleration/deceleration filter Note: Never change acceleration/deceleration filter during output (when DEN of STATUS is set to 0).	0	No acceleration/deceleration filter
			1	Exponential acceleration/ deceleration
D4			2	S-curve acceleration/deceleration
			3	Do not set.
D5			0	
D6			0	
D7			0	
D8	G-SEL	Gain switching	0	First gain
			1	Second gain
D9			2	Third gain
			3	Fourth gain
D10			0	
D11			0	
D12	PPI	Speed loop P/PI control	0	PI control
			1	P control
D13	P_PI_CLR	Position loop position Integral clear	0	Clear.
			1	Does not clear.
D14	P-CL	Forward torque limit	0	Controls torque.
			1	Does not control torque.
D15	N-CL	Reverse torque limit	0	Controls torque.
			1	Does not control torque.

上作科技有限公司
購買、維修 此手冊零組件
電話： 037-466333
Email: service@repairtw.com
Line id: @zzzz
www.repairtw.com

6.5.3 Status Field Specifications: STATUS

The status field is used to monitor the Servo status with the third to fourth byte reserved area of the main commands.

Refer to the following table for details on bit allocation.

- Status Field

D7	D6	D5	D4	D3	D2	D1	D0
PSET/ VCMP	ZPOINT	MLOCK	PON	SVON	CMDRDY	WARNG	ALM

D15	D14	D13	D12	D11	D10	D9	D8
–	–	N_SOT	P_SOT	NEAR/ V_LIM	L_CMP	T_LIM	DEN/ ZSPD

Bit	Name	Description	Set Value	Details	Control Mode
D0	ALM	Alarm occurrence	0	None	
			1	Alarm occurs.	
D1	WARNG	Warning occurrence	0	None	
			1	Warning occurs.	
D2	CMDRDY	Command ready	0	Command cannot be received (busy).	
			1	Command can be received (ready).	
D3	SVON	Servo ON	0	Servo OFF	
			1	Servo ON	
D4	PON	Main power supply ON	0	Main power supply OFF	
			1	Main power supply ON	
D5	MLOCK	Machine lock status (always released)	0	Machine lock released	
D6	ZPOINT	Home position	0	Out of home position range	
			1	Within home position range	
D7	PSET	Positioning completion Output completion (DEN is set to 1) and APOS is within the positioning complete range	0	Out of positioning complete range	Position control mode
			1	Within positioning complete range	
	V-CMP	Speed coincides.	0	Speed dose not coincide.	Speed control mode
			1	Speed coincides.	
D8	DEN	Output completion	0	During output	Position control mode
			1	Output completed	
	ZSPD	Zero speed	0	Zero speed not detected	Speed control mode
			1	Zero speed detected	
D9	T_LIM	Torque limit	0	Not during torque limit	
			1	During torque limit	
D10	L_CMP	Latch completion	0	Latch not completed	
			1	Latch completed	

上正科技有限公司
購買、維修 此手冊零組件
電話： 037-466333
Email: service@repairtw.com
Line id: @xnz
www.repairtw.com

(cont'd)

Bit	Name	Description	Set Value	Details	Control Mode
D11	NEAR	Positioning proximity	0	Out of positioning proximity range	Position control mode
			1	Within positioning proximity range	
	V_LIM	Speed limit	0	Speed limit not detected	Torque control mode
			1	Speed limit detected	
D12	P_SOT	Forward software limit	0	Out of range	
			1	Within range	
D13	N_SOT	Reverse software limit	0	Out of range	
			1	Within range	
D14		Reserved			
D15		Reserved			

6.5.4 Monitor Selection and Monitor Information Field Specifications: SEL_MON1/2/3/4, MONITOR1/2/3/4

上正科技有限公司
購買、維修此手冊零組件
電話：037-266333
Email: service@repairtw.com
Line id: @zzzz
www.repairtw.com

The monitor selection and monitor information field specifications (SEL_MON1/2/3/4, MONITOR1/2/3/4) can be designated using the following main commands:

SV_ON, SV_OFF, HOLD, INTERPOLATE, POSING, FEED, LATCH, EX_POSING, ZRET, VCELCTRL, TRQCTRL, SMON, SENS_ON, SENS_OFF, BRK_ON, BRK_OFF, LTMOD-ON, LTMOD-OFF

The monitor selection and monitor information field is used to select the Servo monitor information and monitor it, with the thirteenth byte of the above main commands, or the nineteenth byte reserved area of the subcommands.

- SEL_MON1/2/3/4 Field

D7	D6	D5	D4	D3	D2	D1	D0
SEL_MON2				SEL_MON1			

D7	D6	D5	D4	D3	D2	D1	D0
SEL_MON4				SEL_MON3			

- MONITOR1/2/3/4 Monitor Codes

Monitor Codes*	Name	Description	Unit
0	POS	Reference position in the reference coordinate system (position after reference filter procedure)	Reference units
1	MPOS	Reference position in the mechanical coordinate system	Reference units
2	PERR	Position error	Reference units
3	APOS	Feedback position in the mechanical coordinate system	Reference units
4	LPOS	Feedback latch position in the mechanical coordinate system	Reference units
5	IPOS	Reference position in the reference coordinate system (position before reference filter procedure)	Reference units
6	TPOS	Target position in the reference coordinate system	Reference units

Monitor Codes*	Name	Description	Unit
7			
8	FSPD	Feedback speed	Position/torque control: reference units/s Speed control: Maximum speed /40000000H
9	CSPD	Reference speed	Position/torque control: reference units/s Speed control: Maximum speed /40000000H
A	TSPD	Target speed	Position/torque control: reference units/s Speed control: Maximum speed /40000000H
B	TRQ	Torque reference (The rated torque is 100%.)	Position/torque control: % Speed control: Maximum torque / 40000000H
C			
D			
E	OMN1	Option monitor 1 selected in Pn824	
F	OMN2	Option monitor 2 selected in Pn825	

* For the items to be monitored, assign their monitor codes to the SEL_MON commands.(, 1 to 4)

6.5.5 IO Monitor Field Specifications: IO_MON

上正科技有限公司
專業工業自動化產品維修
電話： 037-466333
Email: service@repairtw.com
Line id: @zzzz
www.repairtw.com

The IO monitor field specifications (IO_MON) can be designated using the following commands:

SMON, SV_ON, SV_OFF, HOLD, INTERPOLATE, FEED, POSING, LATCH, EX_POSING, ZRET, VELCTRL, TRQCTRL, SENS_ON, SENS_OFF, BRK_ON, BRK_OFF, LTMOD-ON, LTMOD-OFF

The IO monitor field is used to monitor the I/O signal status of the SERVOPACK, with the fourteenth to fifteenth byte reserved area of the above main commands.

- IO Monitor Field

D7	D6	D5	D4	D3	D2	D1	D0
EXT2	EXT1	PC	PB	PA	DEC	N_OT	P_OT

D15	D14	D13	D12	D11	D10	D9	D8
IO15	IO14	IO13	IO12	–	–	BRK	EXT3

Bit	Name	Description	Set Value	Settings
D0	P_OT	Forward run prohibited input	0	OFF
			1	ON
D1	N_OT	Reverse run prohibited input	0	OFF
			1	ON
D2	DEC	Homing deceleration LS input	0	OFF
			1	ON
D3	PA	Encoder phase A input	0	OFF
			1	ON
D4	PB	Encoder phase B input	0	OFF
			1	ON
D5	PC	Encoder phase C input	0	OFF
			1	ON
D6	EXT1	First external latch signal input	0	OFF
			1	ON
D7	EXT2	Second external latch signal input	0	OFF
			1	ON

Bit	Name	Description	Set Value	Settings
D8	EXT3	Third external latch signal input	0	OFF
			1	ON
D9	BRK	Brake output	0	Released
			1	Locked
D10		Reserved	0	
D11		Reserved	0	
D12	IO12	CN1 input signal selected in Pn81E.0	0	OFF
			1	ON
D13	IO13	CN1 input signal selected in Pn81E.1	0	OFF
			1	ON
D14	IO14	CN1 input signal selected in Pn81E.2	0	OFF
			1	ON
D15	IO15	CN1 input signal selected in Pn81E.3	0	OFF
			1	ON

6.5.6 Substatus Field Specifications: SUBSTATUS

The substatus field is used to monitor the subcommand status with the eighteenth byte reserved area of the subcommands.

上正科技有限公司
購買、維修 此手冊零組件
電話： 037-466332
Email: service@repairtw.com
Line id: @zzzz
www.repairtw.com

- Substatus Field

D7	D6	D5	D4	D3	D2	D1	D0
–	–	–	–	–	SBCMDRDY	SBWARNG	SBALM

Bit	Name	Description	Set Value	Details
D0	SBALM	Subcommand alarm occurrence	0	None
			1	Alarm occurs.
D1	SBWARNG	Subcommand warning occurrence	0	None
			1	Warning occurs.
D2	SBCMDRDY	Subcommand ready (Subcommand reception enabled)	0	Subcommands cannot be received. (busy)
			1	Subcommand can be received. (ready)

6.6 Command and Response Timing

This section describes the execution timing for command data and the input timing for monitor data. This timing is constant, regardless of the transmission cycle and communications cycle.

6.6.1 Command Data Execution Timing

Motion commands (POSING, INTERPOLATE) and the OPTION (command data field) are executed 425 s after they are received.

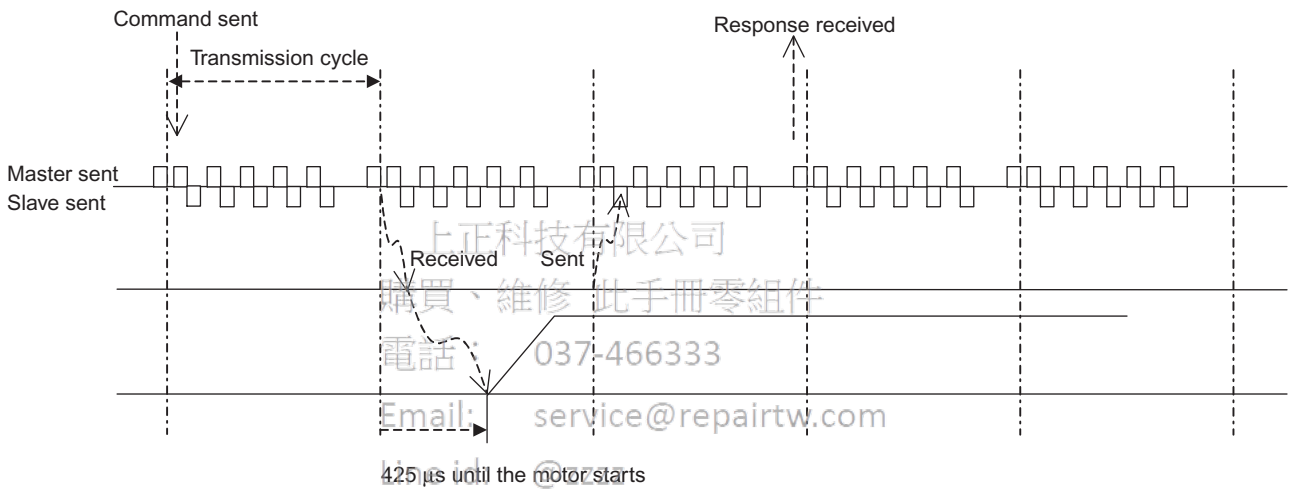

上正科技有限公司
購買、維修 此手冊零組件
電話： 037-466333
Email: service@repairtw.com
Line id: @zzzz
www.repairtw.com

6.6.2 Monitor Data Input Timing

The monitor, I/O, and status data is the data 450 µs before the response is sent.

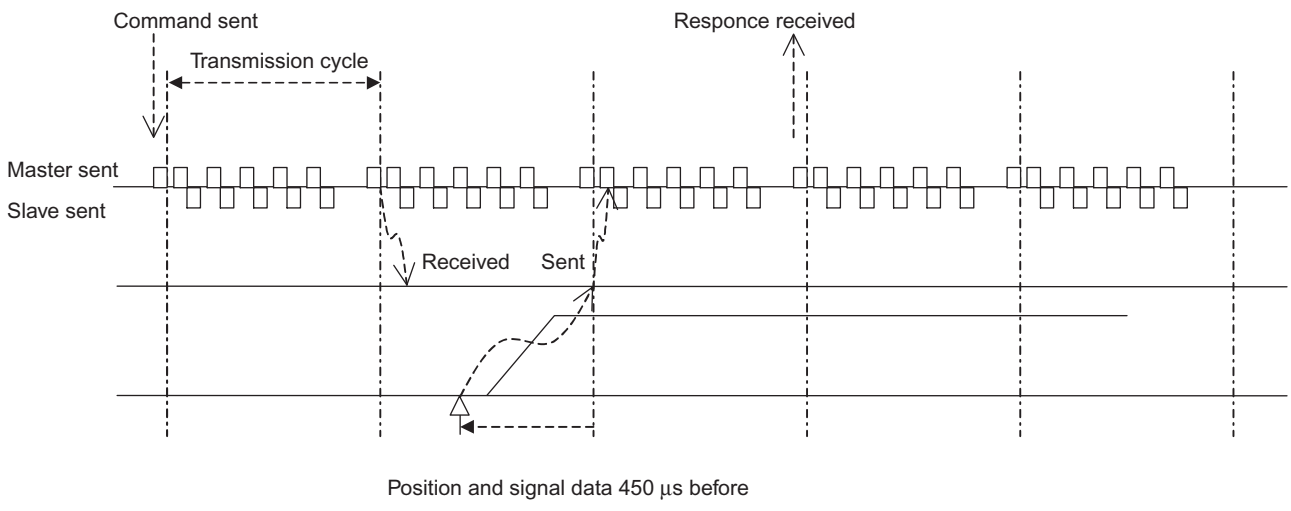

6.7 Operation Sequence

This section describes outline of the operation sequence. Refer to *6.3 Main Commands* and *6.4 Subcommands* for details of command functions and settings.

6.7.1 Operation Sequence for Managing Parameters Using a Controller

When the parameters are managed by a controller, the parameters are transmitted to a controller when the power is turned ON.

With this operation sequence, the settings of the SERVOPACK do not need to be changed when the SERVOPACK is replaced. The following table shows the procedure.

Procedure	Item	Command	Description	Phase
1	Turn ON control and main circuit power supplies.	NOP/DISCONNECT*	Turn ON power supplies.	1
2	Establish connection.	CONNECT	Establish communications. Start the WDT count.	2 or 3
3	Check information such as device ID.	ID_RD	Read information such as device type.	2 or 3
4	Set device.	PRM_WR	Set the necessary parameters such as offline parameters.	2 or 3
5	Set up device.	CONFIG	Enable the parameter settings.	2 or 3
6	Turn ON encoder.	SENS_ON	Turn ON encoder and obtain the position data.	2 or 3
7	Operate main circuit.	SV_ON	Turn ON servomotor.	2 or 3
8	Start operation. . . .	. . .	Start operation. . . .	2 or 3
9	Turn OFF main circuit.	SV_OFF	Turn OFF servomotor.	2 or 3
10	Disconnect connection.	DISCONNECT	Disconnect communications.	4 to 1
11	Turn OFF control and main circuit power supplies.	–	Turn OFF power supplies.	5

上正科技有限公司
購買 維修 此手冊零組件
電話： 037-466333
Email: service@repairtw.com
Line id: @zzzz
www.repairtw.com

* If communication disconnects normally, the NOP command is sent. If communication does not disconnect normally, the DISCONNECT command is sent for two or more communications cycles prior to connection, then the CONNECT command is sent.

6.7.2 Operation Sequence for Managing Parameters Using SERVOPACK

When the parameters are managed by SERVOPACK E^2PROM, the operation is performed in two steps.

Step 1: Saving parameters (during set-up)

Step 2: Ordinary operation sequence

Procedure	Item	Command	Description	Phase
1	Turn ON control power supply.	NOP/DISCONNECT*1	Turn ON power supply.	1
3	Establish connection.	CONNECT	Establish communications. Start the WDT count.	2 or 3
4	Check information such as device ID.	ID_RD	Read information such as device type.	2 or 3
5	Set device.	PPRM_WR*2	Set the necessary parameters such as offline parameters to non-volatile memory.	2 or 3
6	Disconnect connection.	DISCONNECT	Disconnect communications.	4 to 1
7	Turn OFF control power supply.	–	Turn OFF power supply.	5

上正科技有限公司
購買、維修、出售工業零組件
電話： 037-466333
Email: service@repairtw.com
Line id: @
www.repairtw.com

* 1. If communication disconnects normally, the NOP command is sent. If communication does not disconnect normally, the DISCONNECT command is sent for two or more communications cycles prior to connection, then the CONNECT command is sent.
* 2. Do not use PRM_WR.

Procedure	Item	Command	Description	Phase
1	Turn ON control and main circuit power supplies.	NOP/DISONNECT*	Turn ON power supplies.	1
2	Establish connection.	CONNECT	Establish communications. Start the WDT count.	2 or 3
3	Check information such as device ID.	ID_RD	Read information such as device type.	2 or 3
4	Turn ON encoder.	SENS_ON	Turn ON encoder and obtain the position data.	2 or 3
5	Operate main circuit.	SV_ON	Change to Servo ON.	2 or 3
6	Start operation. . . .	 . . .	Start operation. . . .	2 or 3
7	Turn OFF main circuit.	SV_OFF	Change to Servo OFF.	2 or 3
8	Disconnect connection.	DISCONNECT	Disconnect communications.	4 to 1
9	Turn OFF control and main circuit power supplies.	–	Turn OFF power supplies.	5

* If communication disconnects normally, the NOP command is sent. If communication does not disconnect normally, the DISCONNECT command is sent for two or more communications cycles prior to connection, then the CONNECT command is sent.

6.7.3 Operation Sequence When Being Servo ON

Motor control using a host controller is performed using motion commands only while the SERVOPACK is Servo ON (while current flows to the motor). While the SERVOPACK is Servo OFF (while current to the motor is interrupted), management of position data is performed by the SERVOPACK so that the reference coordinate system (POS, MPOS) and FB coordinate system (APOS) are equal. In order to send appropriate motion commands, it is necessary to use the SMON command after the SERVOPACK changes to Servo ON to read the Servo reference coordinate (POS) and send an appropriate reference position.

6.7.4 Operation Sequence When OT (Overtravel Limit Switch) Signal Is Input

When the OT signal is input, the SERVOPACK prohibits rotation in the OT signal direction. This is performed as specified in parameter Pn001, and the SERVOPACK continues to control the motor while this rotation is prohibited. Use the following sequence for processing or canceling when the OT signal is input.

(1) Processing When the OT Signal Is Input

1. Monitor the OT signal or send a stop command if the OT signal will be input. Use either of the following stop commands.
   - Interpolation command (INTERPOLATE, LATCH):
     The interpolation command keeps the interpolation position, then stops. As an alternative, send the HOLD command or SMON command.
   - Movement reference (POSING etc.) command other than the interpolation command:
     Send the HOLD command.
2. Use the output complete flag (DEN = 1) to confirm the completion of SERVOPACK OT processing. By also confirming that PSET = 1, it is possible to detect motor stopping with absolute certainty. The command used in number 1 above is held until these flags are complete.

上正科技有限公司
購買、維修、此手冊零組件
電話： 037-466333
Email: service@repairtw.com
Line id: @3333
www.repairtw.com

(2) OT Cancellation (Retraction)

OT cancellation (retraction) is performed with a movement command. Read out the current reference position POS and reset the reference coordinate system of the correct controller.Then execute a retraction command.

6.7.5 Operation Sequence At Emergency Stop (Main Circuit OFF)

After detecting PON bit which in STATUS field of response data was turned OFF, send the SV_OFF command. The SERVOPACK status is monitored by using the SMON command during emergency stop.

7

Operation

7.1 Outline - 7-2
- 7.1.1 Before Reading This Chapter - 7-2
- 7.1.2 Parameter Configurations - 7-2
- 7.1.3 Digits with Allocated Functions in Parameter - - - - - - - - - - - - - - - - - - 7-3

7.2 Trial Operation - 7-4
- 7.2.1 Check Items before Trial Operation - 7-4
- 7.2.2 Trial Operation for MECHATROLINK II Communications - - - - - - - - - - 7-4
- 7.2.3 Trial Operation Inspection - 7-5
- 7.2.4 Supplementary Information on Trial Operation - - - - - - - - - - - - - - - - - 7-6

7.3 Settings According to Machine Characteristics - - - - - - - - - - - 7-8
- 7.3.1 Switching Servomotor Rotation Direction - 7-8
- 7.3.2 Setting the Overtravel Limit Function - 7-8
- 7.3.3 Software Limit Settings - 7-11

7.4 Settings According to Host Controller - - - - - - - - - - - - - - - - 7-13
- 7.4.1 Sequence I/O Signals - 7-13
- 7.4.2 Using the Electronic Gear Function - 7-14
- 7.4.3 Acceleration/Deceleration Function - 7-18
- 7.4.4 Motion Settings - 7-21

7.5 Setting Up the SERVOPACK - 7-23
- 7.5.1 Parameters - 7-23
- 7.5.2 Input Circuit Signal Allocation - 7-23
- 7.5.3 Output Circuit Signal Allocation - 7-26
- 7.5.4 Debug Function - 7-28
- 7.5.5 Monitoring - 7-28

7.6 Setting Stop Functions - 7-29
- 7.6.1 Using the Dynamic Brake - 7-29
- 7.6.2 Using the Holding Brake - 7-30

7.7 Absolute Encoders - 7-33
- 7.7.1 Selecting an Absolute Encoder - 7-33
- 7.7.2 Absolute Encoder Setup - 7-33
- 7.7.3 Multi-turn Limit Setting - 7-35
- 7.7.4 Absolute Encoder Home Position Offset - 7-37

上正科技有限公司
購買、維修 此手冊零組件
電話： 037-466333
Email: service@repairtw.com
Line id: @zzzz
www.repairtw.com

7.1 Outline

7.1.1 Before Reading This Chapter

This chapter describes the use of each CN1 I/O signal for the SERVOPACK. It also describes the procedure for setting the related parameters for the intended purposes.

The following sections can be used as references for this chapter.

- CN1 I/O signal list: Refer to *5.3.3 I/O Signal (CN1) Names and Functions*.
- CN1 I/O signal terminal layout: *5.3.2 I/O Signal Connector (CN1) Terminal Layout*.
- Parameter list: Refer to *11.2.2 List of Parameters*.

The CN1 connector is used to exchange signals with external circuits.

7.1.2 Parameter Configurations

Parameters are comprised of the types shown in the following table. Refer to *11.2.2 List of Parameters*.

Type	Parameter No.	Description
Function Selection Parameters	Pn000 to Pn008	Select basic and application functions such as the type of function or the stop mode used when an alarm occurs.
Servo Gain and Other Parameters	Pn100 to Pn1AC	Set numerical values such as speed and position loop gains.
Position Parameters	Pn200 to Pn281, Pn803 to Pn808	Set position parameters such as the reference pulse input form and electric gear ratio.
Speed Parameters	Pn300 to Pn384	Set speed parameters such as speed reference input gain and soft start acceleration/deceleration time.
Torque Parameters	Pn400 to Pn456	Set torque parameters such as the torque reference input gain and forward/reverse torque limits.
Acceleration/Deceleration Parameters	Pn80A to Pn812	Set acceleration/deceleration parameters, such as selecting an acceleration/deceleration filter.
Sequence Parameters	Pn501 to Pn551, Pn801, Pn81E	Set output conditions for all sequence signals and changes I/O signal selections and allocations.
Motion Parameters	Pn814 to Pn819, Pn824 to Pn825	Set motion parameters, such as the homing direction.
MECHATROLINK II Parameters	Pn800	Set parameters for MECHATROLINK II communications settings.
Regenerative Resistor Capacity	Pn600	Specify the capacity for an external regenerative resistor and reserved parameters.
Auxiliary Function Execution	Fn000 to Fn01E	Execute auxiliary functions such as JOG Mode operation.
Monitor Modes	Un000 to Un00D	Enable speed and torque reference monitoring, as well as monitoring to check whether I/O signals are ON or OFF.

上正科技有限公司
購買、維修、出售工業電子組件
電話： 037-466333
Email: service@repairtw.com
Line id: @2222
www.repairtw.com

7.1.3 Digits with Allocated Functions in Parameter

The parameters written as PnXXX.Y are called digit-set parameters. For these parameters, the “Y” indicates the location of the bit where the setting is made to select a function. The position of each digit in hexadecimal code is shown below.

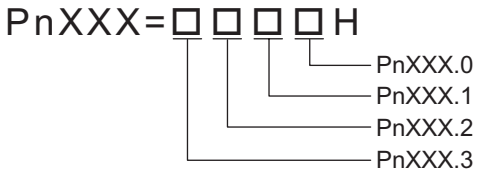

Each hexadecimal digit is four-bit long. Set “Y” to a hexadecimal value ranging from 0 to F.

上正科技有限公司
購買、維修 此手冊零組件
電話： 037-466333
Email: service@repairtw.com
Line id: @zzzz
www.repairtw.com

7.2 Trial Operation

7.2.1 Check Items before Trial Operation

Conduct trial operation after wiring has been completed.

Inspect and check the following items when performing trial operation, and be sure to conduct trial operation safely.

(1) Servomotors

Inspect the following items before conducting trial operation. Also conduct the inspections according to *10.2 Inspection and Maintenance* if conducting trial operation on servomotors that have been stored for a long period of time. Take appropriate actions immediately if an error occurs.

- Connection to machines or devices, wiring and grounding are correct.
- Are bolts and nuts securely tightened?
- Is the oil seal undamaged and oiled?

(2) SERVOPACKs

Inspect the following items before conducting trial operation. Take appropriate actions immediately if an alarm or an error occurs.

- Parameters are properly set for the applicable servomotor and specifications.
- Terminal connections and wiring leads are tightened securely and connectors are inserted securely.
- The power supply turns OFF if a servo alarm occurs.
- The power supplied to the SERVOPACK is the correct voltage.

上正科技有限公司
購買、維修、出售零組件
電話： 03-7466333
Email: service@repairtw.com
Line Id: @2222
www.repairtw.com

7.2.2 Trial Operation for MECHATROLINK II Communications

This section describes the trial operation procedure for MECHATROLINK II communications.

(1) Preparations for Trial Operation

IMPORTANT	To prevent accidents, initially conduct trial operation with no load connected to the servomotor. Before starting operation with a connected load, make sure emergency-stop procedures are in place.

Prepare for operation using the following procedure.

1. Check that wiring has been performed correctly and then connect the signals (CN1 connector).
2. Turn ON the power.

   If power is being supplied correctly, the CHARGE or POWER indicator on the SERVOPACK and COM LED (only during MECHATROLINK II communications) will light.

   If COM LED (only during MECHATROLINK II communications) does not light, check to make sure the switches (SW1 and SW2) are set correctly and then turn the power OFF then ON again. For information on switch settings, refer to *6.2 Switches for MECHATROLINK II Communications Settings.*
3. Send the CONNECT (start connection) command first.

   The status of the SERVOPACK can be checked using the SMON (Status Monitoring) command. The response data from the SERVOPACK will be alarm code 00 (normal).
4. Confirm the product model number using the ID_RD (Read ID) command.

   The product model number (example: “SGDS-01A12A” etc.) will be returned from the SERVOPACK.
5. Write the parameters necessary for trial operation using the PRM_WR (Write Parameter) command.

   Refer to *7.2.4 (1) Minimum Parameters and Input Signals*, for information on the necessary preparations.

6. Execute the SV_ON (Servo ON) command. The power circuit in the SERVOPACK will be activated and the servomotor will be ready to operate. At this point, SVON = 1 (base block currently being released) in STATUS will be returned.

(2) Operating the Servomotor

Only the main circuit can be operated while the base block is being released. Run the servomotor at low speed.

- Command Transmission Example

  POSING (rapid traverse positioning) command

  Option = 0

  Positioning setting = 10000 (current position +10000 with absolute encoders)

  Rapid traverse speed = 400

  Make sure the servomotor is operating in the proper direction according to the reference. If the reference and rotational direction do not match, refer to *7.2.4 (1) Minimum Parameters and Input Signals* and set correctly.

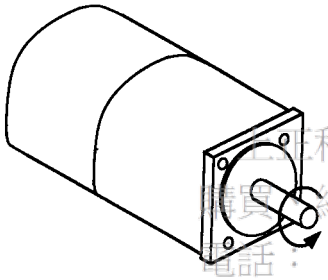

三旺科技有限公司
購買 維修 此手冊零組件
電話： 037-466333
Email: service@repairtw.com
Line id: @zzzz
www.repairtw.com

Fig. 7.1 Motor Forward Rotation

7.2.3 Trial Operation Inspection

Inspect the following items during the trial operation.

- Unusual vibration
- Abnormal noise
- Excessive temperature rise

Take actions according to *10.1 Troubleshooting* if an alarm occurs. Also note that the servomotor may overload during the trial operation if the load system is not suitably broken in.

7.2.4 Supplementary Information on Trial Operation

(1) Minimum Parameters and Input Signals

This section describes the minimum parameters and input signals required for trial operation.

(a) Parameters

Turn OFF power once after changing any parameter. The change will be valid when power is turned ON again.

Pn20E	Electronic Gear Ratio (Numerator)	See *7.4.2*
Pn210	Electronic Gear Ratio (Denominator)	See *7.4.2*

- Changing Servomotor Rotation Direction

  Use the following parameter to reverse the direction of rotation.

Pn000.0	Function Selection Basic Switches: Direction Selection	See *7.3.1*

(b) Input Signals

Refer to the relevant page for details on each input signal.

Input signal selection settings through parameters can be used to eliminate the need for external short circuits.

Signal Name		Pin Number	Description
P-OT	Forward run prohibited	CN1-7	The Overtravel Limit Switch Refer to 7.3.2
N-OT	Reverse run prohibited	CN1-8	

上正科技有限公司
購買 維修 此手冊零組件
電話： 037-466233
Email: service@repairtw.com
Line id: @zzzz
www.repairtw.com

(2) Servomotors with Brakes

Use servomotors with brakes for vertical shaft applications or when external force is applied to the shaft to prevent the shaft from rotating due to gravity or external force when power is lost. The SERVOPACK uses the brake interlock output (/BK) signal to control holding brake operation when using servomotors with brakes.

● Vertical Shaft

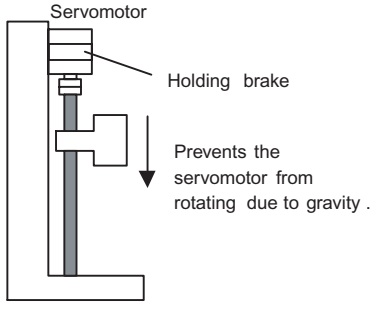

● Shaft with External Force Applied

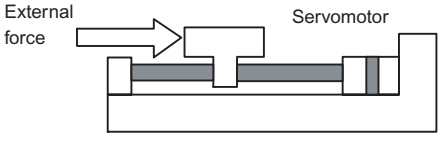

IMPORTANT

To prevent faulty operation due to gravity or external force, make sure that the servomotor and holding brake operate normally with the servomotor disconnected from the machine. When both of them operate normally, connect the servomotor to the machine to start trial operation.

The following figure shows wiring for a servomotor with brakes. Refer to *7.6.2 Using the Holding Brake* for details on wiring.

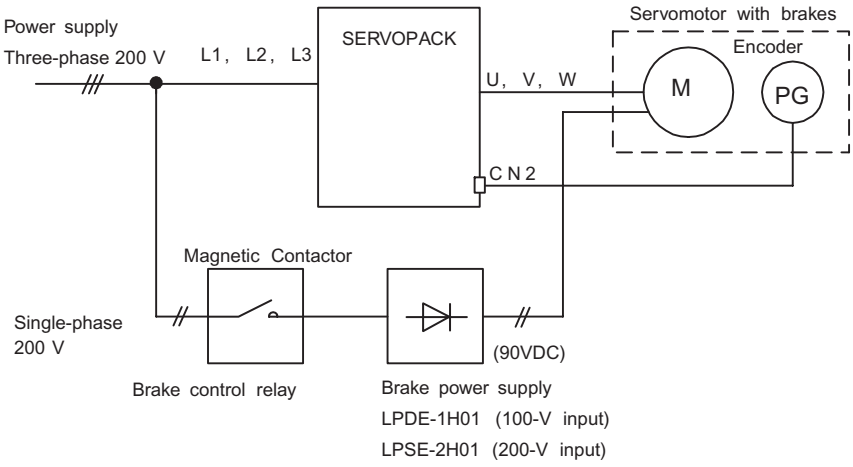

上正科技有限公司
購買、維修 此手冊零組件
電話： 037-466333
Email: service@repairtw.com
Line id: @zzzz
www.repairtw.com

7.3 Settings According to Machine Characteristics

This section describes the procedure for setting parameters according to the dimensions and performance of the machine used.

7.3.1 Switching Servomotor Rotation Direction

The SERVOPACK has a Reverse Rotation Mode that reverses the direction of servomotor rotation without rewiring. Forward rotation in the standard setting is defined as counterclockwise as viewed from the load.

With the Reverse Rotation Mode, the direction of servomotor rotation can be reversed without changing other items. The direction (+, -) of shaft motion is reversed.

	Standard Setting	Reverse Rotation Mode
Forward Reference	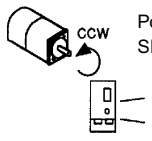	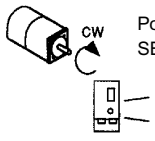
Reverse Reference	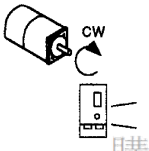	

上正科技有限公司
購買、維修 此手冊零組件
電話： 037-466333
Email: service@repairtw.com
Line id: @zzzz
www.repairtw.com

- Setting Reverse Rotation Mode

  Use parameter Pn000.0.

  Use the following settings to select the direction of servomotor rotation.

Parameter		Description
Pn000	n.□□□**0**	Forward rotation is defined as counterclockwise (CCW) rotation as viewed from the load. (Factory setting)
	n.□□□**1**	Forward rotation is defined as clockwise (CW) rotation as viewed from the load. (Reverse Rotation Mode)

7.3.2 Setting the Overtravel Limit Function

The overtravel limit function forces movable machine parts to stop if they exceed the allowable range of motion.

IMPORTANT

The forward/reverse run prohibited function uses software to stop the SERVOPACK. This method may not satisfy the standards, depending on the safety specifications for the application. If necessary, add an external safety circuit.

(1) Display of Overtravel

When an overtravel occurs, the indicator on the front panel of the SERVOPACK displays the following messages.

① Forward overtravel (P-OT)

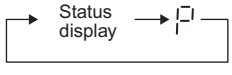

② Reverse overtravel (N-OT)

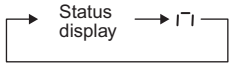

③ Forward and reverse overtravel

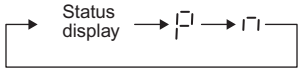

(2) Using the Overtravel Function

To use the overtravel function, connect the overtravel limit switch input signal terminals shown below to the correct pins of the SERVOPACK CN1 connector.

→ Input P-OT CN1-7	Forward Run Prohibited (Forward Overtravel)	Position Control
→ Input N-OT CN1-8	Reverse Run Prohibited (Reverse Overtravel)	Position Control

Connect limit switches as shown below to prevent damage to the machines during linear motion.

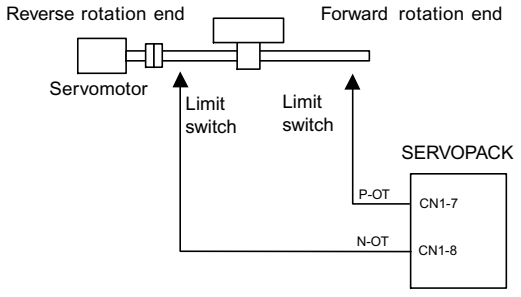

Drive status with an input signal ON or OFF is shown in the following table.

上立科技有限公司
購買、維修 此手冊零組件
電話：037-466333
Email: service@repairtw.com
Line id: @ccc
www.repairtw.com

P-OT	CN1-7 at low level when ON	Forward rotation allowed. Normal operation status.
	CN1-7 at high level when OFF	Forward run prohibited (reverse rotation allowed).
N-OT	CN1-8 at low level when ON	Reverse rotation allowed. Normal operation status.
	CN1-8 at high level when OFF	Reverse run prohibited (forward rotation allowed).

(3) Enabling/Disabling Input Signals

Set the following parameters to specify whether input signals are used for overtravel or not. The factory setting is "used."

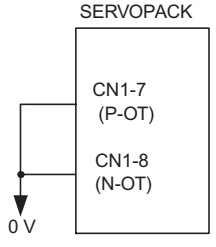

The short-circuit wiring shown in the figure can be omitted when P-OT and N-OT are not used.

Parameter		Description
Pn50A	n.**1**□□□	Uses the P-OT input signal for prohibiting forward rotation. (Forward rotation is prohibited when CN1-7 is open and is allowed when CN1-7 is at 0 V.) (Factory setting)
	n.**8**□□□	Does not use the P-OT input signal for prohibiting forward rotation. (Forward rotation is always allowed and has the same effect as shorting CN1-7 to 0 V.)
Pn50B	n.□□□**2**	Uses the N-OT input signal for prohibiting reverse rotation. (Reverse rotation is prohibited when CN1-8 is open and is allowed when CN1-8 is at 0 V.) (Factory setting)
	n.□□□**8**	Does not use the N-OT input signal for prohibiting reverse rotation. (Reverse rotation is always allowed and has the same effect as shorting CN1-8 to 0 V.)

(4) Servomotor Stop Mode for P-OT and N-OT Input Signals

Set the following parameters to specify the servomotor Stop Mode when P-OT and N-OT input signals are used.

Specify the servomotor Stop Mode when either of the following signals is input during servomotor operation.

- Forward run prohibited input (P-OT, CN1-7)
- Reverse run prohibited input (N-OT, CN1-8)

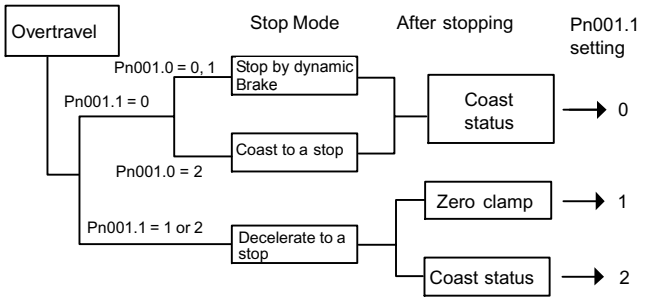

Parameter		Description
Pn001	n.□□**0**□	Stops the servomotor the same way as changing to Servo OFF (according to Pn001.0).
	n.□□**1**□	Decelerates the servomotor to a stop at the preset torque value or less, and then locks the servomotor in Zero Clamp Mode. Torque setting: Pn406 emergency stop torque
	n.□□**2**□	Decelerates the servomotor to a stop at the preset torque value or less, and puts the servomotor in coast status. Torque setting: Pn406 emergency stop torque
Pn406 specifies the stop torque applied for overtravel when the input signal for prohibiting forward or reverse rotation is used.		

上正科技有限公司
購買、維修此手冊零組件
電話: 037-406393
Email: service@repairtw.com
Line id: @2222
www.repairtw.com

The torque limit is specified as a percentage of rated torque.

Pn406	Emergency Stop Torque			
	Setting Range	Setting Unit	Factory Setting	Setting Validation
	0 to 800%	1%	800%	Immediately

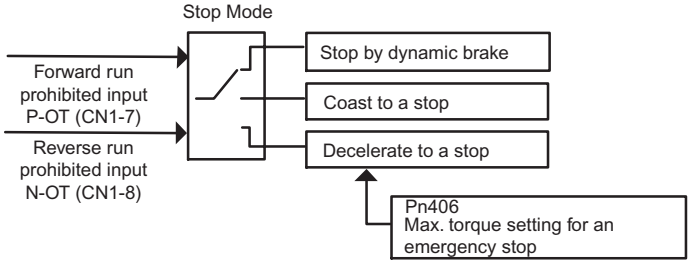

(5) Servo OFF Stop Mode Selection

The SERVOPACK turns OFF under the following conditions:

- The SV_OFF command is transmitted.
- Servo alarm occurs.
- Power is turned OFF.

Specify the Stop Mode if any of these occurs during servomotor operation.

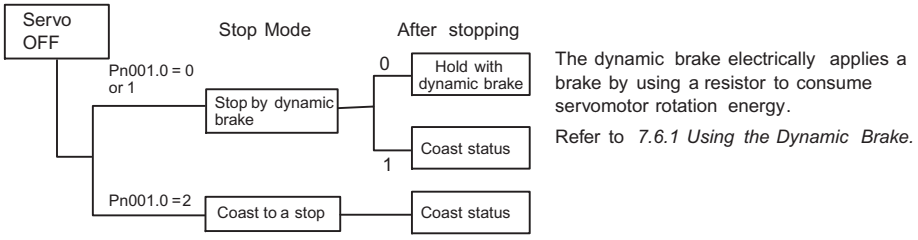

Parameter		Description
Pn001	n.□□□**0**	Uses the dynamic brake to stop the servomotor, and maintains dynamic brake status after stopping. (Factory setting)
	n.□□□**1**	Uses the dynamic brake to stop the servomotor, and cancels dynamic brake status after stopping to go into coast status.
	n.□□□**2**	Coasts the servomotor to a stop. The servomotor is turned OFF and stops due to machine friction.

Note: If the servomotor is stopped or rotating at extremely low speed when the Pn001.0 is set to 0 (dynamic brake status after stopping with the dynamic brake), then braking power is not generated and the servomotor will stop the same as in coast status.

上林科技有限公司
購買、維修 此手冊零組件
電話: 037-466333
Email: service@repairtw.com
Line id: @zzzz
www.repairtw.com

7.3.3 Software Limit Settings

The software limits set limits in software for machine movement that do not use the overtravel signals (P-OT and N-OT). If a software limit is exceeded, an emergency stop will be executed in the same way as it is for overtravel.

(1) Software Limit Function

The software limits can be enabled or disabled.

The software limit function parameter is used to enable the software limit function.

The software limits can be enabled under the following conditions. Under all other circumstances, the software limits will not be enabled even if a software limit is exceeded.

- The ZRET command has been executed.
- REFE = 1 using the POS_SET command.

Enable or disable the software limits using one of the following settings.

Parameter		Description
Pn801	n.□□□**0**	Software limits enabled.
	n.□□□**1**	Forward software limit disabled.
	n.□□□**2**	Reverse software limit disabled.
	n.□□□**3**	Both software limits disabled. (Factory setting)

(2) Software Limit Check using References

Enable or disable software limit checks when target position references such as POSING or INTERPOLATE are input. When the input target position exceeds the software limit, a deceleration stop will be performed from the software limit set position.

Parameter		Description
Pn801	n.□**0**□□	No software limit check using references. (Factory setting)
	n.□**1**□□	Software limit check using references.

(3) Software Limit Setting

Set software limits in the positive and negative directions.

Because the limit zone is set according to the (+) or (-) direction, the negative (-) limit must be less than the positive (+) limit.

Pn804 **Pn805**	Forward Software Limit			Position
	Setting Range	Setting Unit	Factory Setting	Setting Validation
	-1073741823 to 1073741823	1 Reference Unit	8192∗99999	Immediately
Pn806 **Pn807**	Reverse Software Limit			Position
	Setting Range	Setting Unit	Factory Setting	Setting Validation
	-1073741823 to 1073741823	1 Reference Unit	8192∗99999	Immediately

The negative limit must be less than the positive limit.

上正科技有限公司
購買、維修、此手冊零組件
電話： 037-466333
Email: service@repairtw.com
Line id: @zzzz
www.repairtw.com

7.4 Settings According to Host Controller

This section describes the procedure for connecting a SGDS-□□□1□□ SERVOPACK to a host controller, including the procedure for setting related parameters.

7.4.1 Sequence I/O Signals

Sequence I/O signals are used to control SERVOPACK operation. Connect these signal terminals as required.

(1) Input Signal Connections

Connect the sequence input signals. (Factory settings)

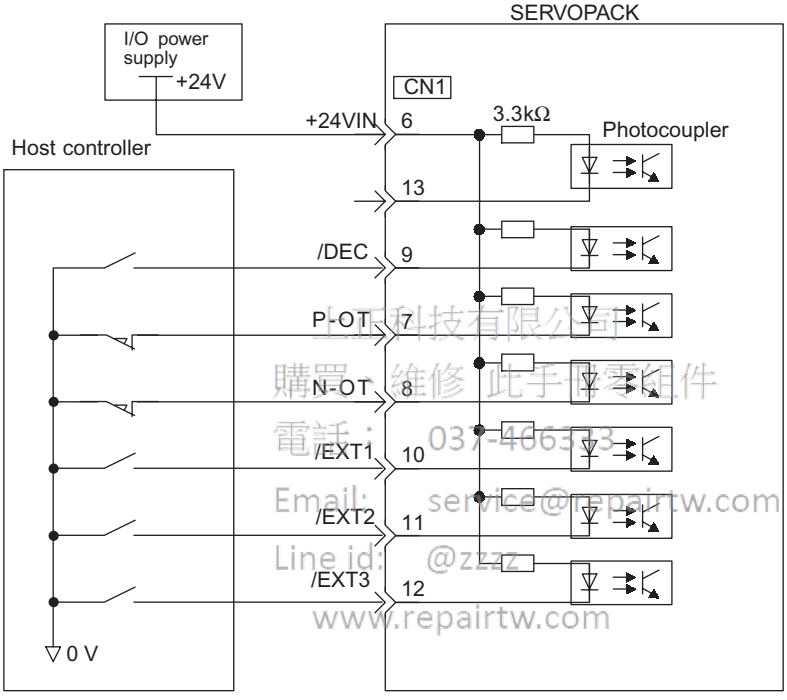

上揚科技有限公司
購買、維修 此手冊零組件
電話： 037-466333
Email: service@repairtw.com
Line id: @zzzz
www.repairtw.com

IMPORTANT

Provide an external input power supply; the SERVOPACK does not have an internal 24-V power supply.

- External power supply specifications for sequence input signal: 24 ± 1 VDC, 50 mA min.

Yaskawa recommends using the same external power supply as that used for output circuits. The allowable voltage range for the 24-V sequence input circuit power supply is 11 to 25 V. Although a 12-V power supply can be used, contact faults can easily occur for relays and other mechanical contacts under low currents. Confirm the characteristics of relays and other mechanical contacts before using a 12-V power supply.

The function allocation for sequence input signal circuits can be changed.

Refer to *7.5.2 Input Circuit Signal Allocation* for more details.

→ Input +24VIN CN1-6	External I/O Power Supply Input	Position Control

The external power supply input terminal is common to sequence input signals.

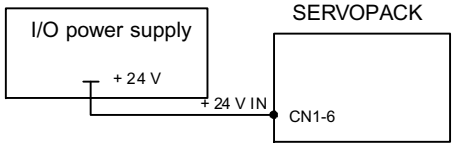

Connect an external I/O power supply.

Contact input signals: /DEC (CN1-9)
P-OT (CN1-7)
N-OT (CN1-8)
/EXT1 (CN1-10)
/EXT2 (CN1-11)
/EXT3 (CN1-12)

(2) Output Signal Connections

Connect the sequence output signals as shown in the following figure. (Factory setting)

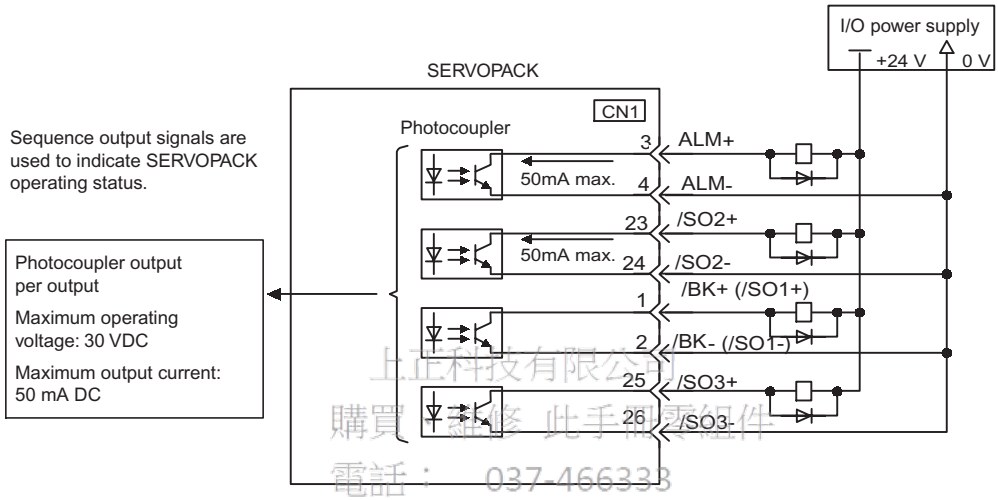

上正科技有限公司
購買 維修 此手機零組件
電話： 037-466333
Email: service@repairtw.com
Line Id: @2222
www.repairtw.com

IMPORTANT

Provide a separate external I/O power supply; the SERVOPACK does not have an internal 24-V power supply. Yaskawa recommends using the same type of external power supply as that used for input circuits.

Function allocation for some sequence output signal circuits can be changed.

Refer to *7.5.3 Output Circuit Signal Allocation* for more details.

7.4.2 Using the Electronic Gear Function

The electronic gear function enables the servomotor travel distance per input reference pulse from host controller to be set to any value. One reference pulse from the host controller is the minimum unit and is called “one reference unit”. It allows the host controller generating pulses to be used for control without having to consider the machine deceleration ratio or the number of encoder pulses.

When the Electronic Gear Function is Not Used

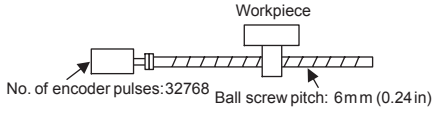

To move a workpiece 10 mm (0.39 in):

1 revolution is 6 mm. Therefore,
10 ÷ 6 = 1.6666 revolutions
32768 × 4 pulses is 1 revolution. Therefore,
1.6666 × 32768 × 4 = 218445 pulses
218445 pulses are input as references.
The equation must be calculated at the host controller.

When the Electronic Gear Function is Used

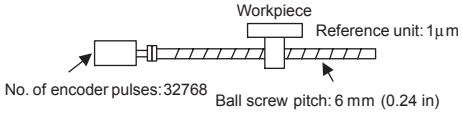

To move a workpiece 10 mm (0.39 in) using reference units :

The reference unit is 1μm. Therefore,
to move the workpiece 10 mm (10000μm),
1pulse = 1μm,so
10000/1 = 10000 pulses.
Input 1000 pulses.

(1) Setting the Electronic Gear

Calculate the electronic gear ratio (B/A) using the following procedure, and set the values in parameters Pn20E and 210.

1. Check machine specifications.

   Items related to the electronic gear:

   - Deceleration ratio
   - Ball screw pitch
   - Pulley diameter

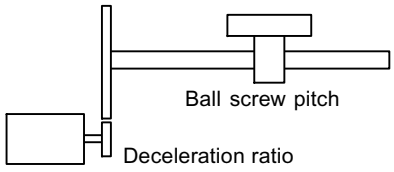

2. Check the number of encoder pulses for the servomotor.

Encoder Type	Number of Encoder Pulses Per Revolution (P/R)	
Incremental encoder	13 bits	2048
	16 bits	16384
	17 bits	32768
	20 bits	262144
Absolute encoder	16 bits	16384
	17 bits	32768
	20 bits (without multi-turn data)	262144

上正科技有限公司
購買、維修 工手冊零部件
電話： 03746333
Email: service@repairtw.com
Line id: @zzzz
www.repairtw.com

3. Determine the reference unit used.

   A reference unit is the minimum position data unit used to move a load. (Minimum unit of reference from the host controller.)

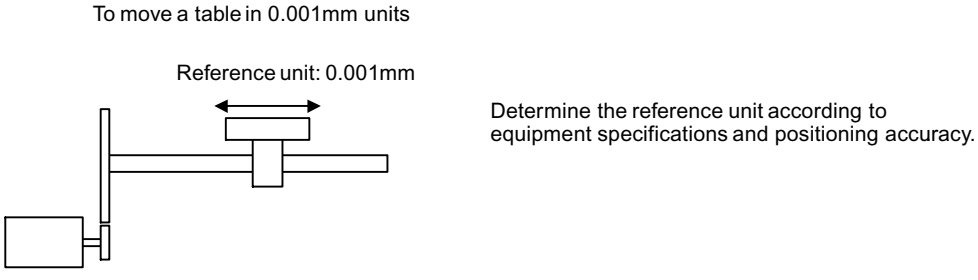

◀ EXAMPLE ▶

- Use the following unit of measurement in physics.
  0.01 mm (0.0004 in), 0.001 mm (0.00004 in), 0.1°, 0.01 inch.

4. Determine the load travel distance per load shaft revolution in reference units.

$$\text{Travel distance per load shaft revolution (reference unit)} = \frac{\text{Travel distance per load shaft revolution}}{\text{Reference unit}}$$

◀ EXAMPLE ▶

- When the ball screw pitch is 5 mm (0.20 in) and the reference unit is 0.001 mm (0.00004 in)

$$\frac{5}{0.001} = 5000 \text{ (reference unit)}$$

Ball Screw	Circular Table	Belt and Pulley
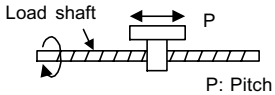 1 revolution = $\frac{P}{\text{reference unit}}$	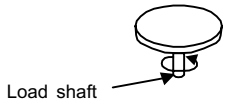 1 revolution = $\frac{360^\circ}{\text{reference unit}}$	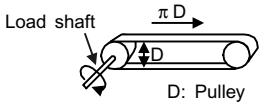 1 revolution = $\frac{\pi D}{\text{reference unit}}$

5. Electronic gear ratio is given as $\left(\frac{B}{A}\right)$.

   If the decelerator ratio of the motor and the load shaft is given as $\frac{n}{m}$
   where m is the rotation of the motor and n is the rotation of the load shaft,

$$\text{Electronic gear ratio}\left(\frac{B}{A}\right) = \frac{\text{No. of encoder pulses} \times 4}{\text{Travel distance per load shaft revolution (reference unit)}} \times \frac{m}{n}$$

IMPORTANT

Make sure the electronic gear ratio satisfies the following condition:

$$0.01 \leq \text{Electronic gear ratio}\left(\frac{B}{A}\right) \leq 100$$

The SERVOPACK will not work properly if the electronic gear ratio is outside this range. In this case, modify the load configuration or reference unit.

上正科技有限公司
購買 維修 此手冊零組件
電話： 037-466333
Email: service@repairtw.com
Line id: @zzzz
www.repairtw.com

6. Set the parameters.

   Reduce the electronic gear ratio $\left(\frac{B}{A}\right)$ to the lower terms so that both A and B are integers smaller than 1073741824, then set A and B in the respective parameters.

$\left(\frac{B}{A}\right)$ →

Pn20E	Electronic Gear Ratio (Numerator)
Pn210	Electronic Gear Ratio (Denominator)

That is all that is required to set the electronic gear ratio.

Pn20E	Electronic Gear Ratio (Numerator)			Position
	Setting Range	Setting Unit	Factory Setting	Setting Validation
	1 to 1073741824 (2^{30})	None	4	After restart
Pn210	Electronic Gear Ratio (Denominator)			Position
	Setting Range	Setting Unit	Factory Setting	Setting Validation
	1 to 1073741824 (2^{30})	None	1	After restart

Set the electronic gear ratio according to machine specifications.

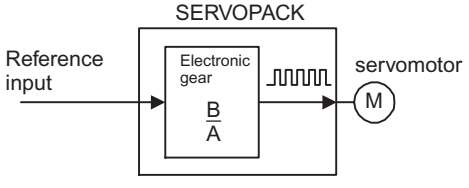

$$\text{Electronic gear ratio}\left(\frac{B}{A}\right) = \frac{Pn20E}{Pn210}$$

- B = [(Number of encoder pulses) × 4] × [motor speed]
- A = [Reference units (travel distance per load shaft revolution)] × [load shaft revolution speed]

(2) Electronic Gear Setting Examples

The following examples show electronic gear settings for different load mechanisms.

(a) Ball Screws

Reference unit: 0.001 mm (0.00004 in)

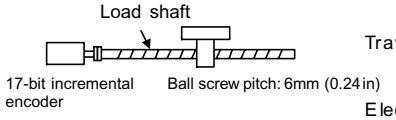

$$\text{Travel distance per load shaft revolution} = \frac{6\,\text{mm}}{0.001\,\text{mm}} = 6000$$

$$\text{Electronic gear ratio}\left(\frac{B}{A}\right) = \frac{32768 \times 4 \times 1}{6000 \times 1} = \frac{Pn20E}{Pn210}$$

Preset Values	Pn20E	131072
	Pn210	6000

(b) Circular Tables

上正科技有限公司
購買、維修 此手冊零組件
電話： 037-466333
Email: service@repairtw.com
Line id: @zzzz
www.repairtw.com

Reference unit: 0.01°

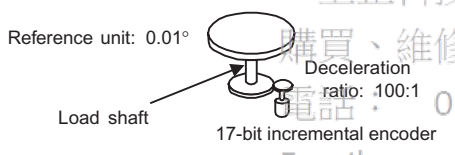

$$\text{Travel distance per load shaft revolution} = \frac{360^\circ}{0.01^\circ} = 36000$$

$$\text{Electonic gear ratio}\left(\frac{B}{A}\right) = \frac{32768 \times 4 \times 100}{36000 \times 1} = \frac{Pn20E}{Pn210}$$

Preset Values	Pn20E	13107200
	Pn210	36000

(c) Belts and Pulleys

Reference unit: 0.005mm (0.0010 in)

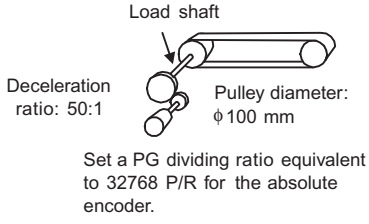

$$\text{Travel distance per load shaft revolution} = \frac{3.14 \times 100\,\text{mm}}{0.005\,\text{mm}} = 62800$$

$$\text{Electronic gear ratio}\left(\frac{B}{A}\right) = \frac{32768 \times 4 \times 50}{62800 \times 1} = \frac{6553600}{62800} = \frac{Pn20E}{Pn210}$$

Preset Values	Pn20E	6553600
	Pn210	62800

(3) Control Block Diagram

The following diagram illustrates a control block for position control.

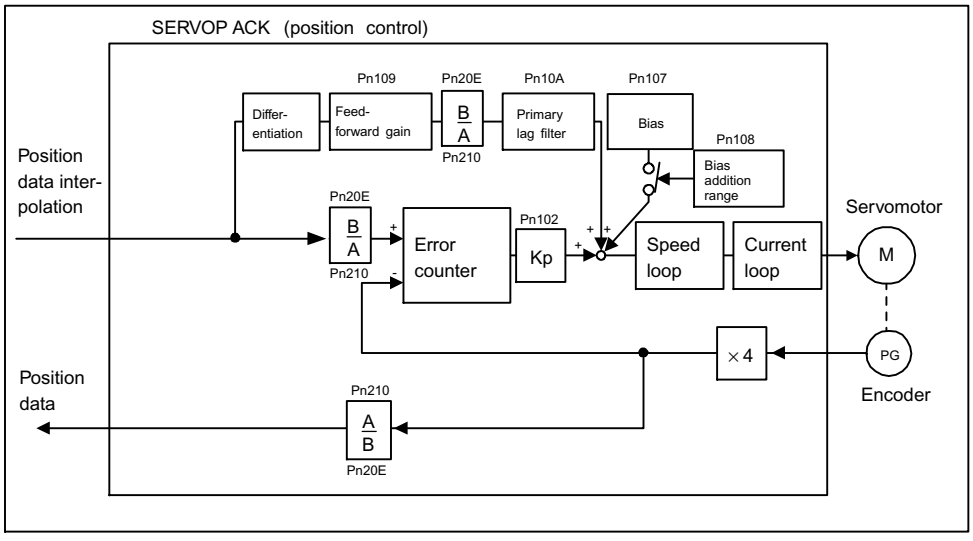

上正科技有限公司
購買、維修 此手冊零組件
電話: 037-406333
Email: service@repairtw.com
Line id: @zzzz
www.repairtw.com

7.4.3 Acceleration/Deceleration Function

Acceleration and deceleration can be performed by setting the following parameters.

Use only after you have fully understood the meaning of each parameter. Settings are changed using MECHATROLINK II communications.

- Related parameters

Type	Pn No.	Outline
Acceleration/deceleration	Pn80A	First-step linear acceleration parameter
	Pn80B	Second-step linear acceleration parameter
	Pn80C	Acceleration switching speed
	Pn80D	First-step linear deceleration parameter
	Pn80E	Second-step linear deceleration parameter
	Pn80F	Deceleration switching speed
Acceleration/deceleration filter	Pn810	Exponential acceleration/ deceleration bias
	Pn811	Exponential acceleration/ deceleration time constant
	Pn812	Movement average time

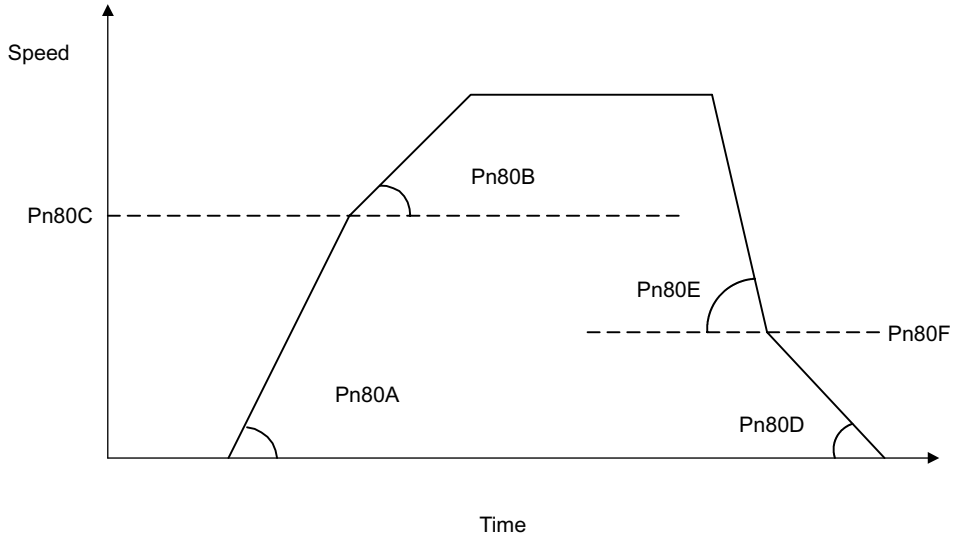

(1) First-step Linear Acceleration Parameter

Set the first-step linear acceleration when 2-step acceleration is used.

上正科技有限公司
購買、維修 此手冊零組件
電話： 037-466555
Email: service@repairtw.com
Line id: @zzzz
www.repairtw.com

Pn80A	First-step Linear Acceleration Parameter			Position
	Setting Range	Setting Unit	Factory Setting	Setting Validation
	1 to 65535	10,000 reference units/s^2	100	Valid when DEN = 1

(2) Second-step Linear Acceleration Parameter

Set the second-step linear acceleration, when 2-step acceleration is used.

When first-step acceleration is used, set Pn80B as the parameter for first-step acceleration.

Pn80B	Second-step Linear Acceleration Parameter			Position
	Setting Range	Setting Unit	Factory Setting	Setting Validation
	1 to 65535	10,000 reference units/s^2	100	Valid when DEN = 1

(3) Acceleration Switching Speed

Set the speed for switching between first-step and second-step acceleration when 2-step acceleration is used.

When first-step acceleration is used, set the acceleration switching speed (Pn80C) to 0.

Pn80C	Acceleration switching speed			Position
	Setting Range	Setting Unit	Factory Setting	Setting Validation
	0 to 65535	10,000 reference units/s	0	Valid when DEN = 1

(4) First-step Linear Deceleration Parameter

Set the first-step linear deceleration when 2-step deceleration is used.

Pn80D	First-step Linear Deceleration Parameter			Position
	Setting Range	Setting Unit	Factory Setting	Setting Validation
	1 to 65535	10,000 reference units/s^2	100	Valid when DEN = 1

(5) Second-step Linear Deceleration Parameter

Set the second-step linear deceleration, when 2-step deceleration is used.

When the first step deceleration parameter is used, set Pn80E as the parameter for first-step deceleration.

Pn80E	Second-step Linear Deceleration Parameter			Position
	Setting Range	Setting Unit	Factory Setting	Setting Validation
	1 to 65535	10,000 reference units/s^2	100	Valid when DEN = 1

(6) Deceleration Parameter Switching Speed

Set the speed for switching between first-step and second-step deceleration when 2-step deceleration is used.

When first-step deceleration is used, set the deceleration switching speed (Pn80F) to 0.

Pn80F	Deceleration Parameter Switching Speed			Position
	Setting Range	Setting Unit	Factory Setting	Setting Validation
	0 to 65535	100 reference units/s	0	Valid when DEN = 1

IMPORTANT

To use trapezoidal acceleration/deceleration without using second-step acceleration/deceleration, set the parameters Pn80C and Pn80F to “0”, and set the acceleration speed parameter, Pn80B, and the deceleration speed parameter, Pn80E.

上班科技有限公司
購買、維修 此手冊零組件
電話： 037-466333
Email: service@repairtw.com
Line id: @037
www.repairtw.com

(7) Exponential Position Reference Filter Bias

Set the bias when an exponential function filter is used for the position reference filter.

Pn810	Exponential Position Reference Filter Bias			Position
	Setting Range	Setting Unit	Factory Setting	Setting Validation
	0 to 32767	1 reference unit/s	0	Valid when DEN = 1

(8) Exponential Position Reference Filter Time Constant

Set the time constant when an exponential function filter is used for the position reference filter.

Pn811	Exponential Position Reference Filter Time Constant			Position
	Setting Range	Setting Unit	Factory Setting	Setting Validation
	0 to 5100	0.1 ms	0	Valid when DEN = 1

(9) Movement Average Position Reference Filter Movement Average Time

Set the average time of movement when a movement averaging filter is used for the position reference filter. Set this parameter when using S-curve acceleration/deceleration.

Pn812	Movement Average Position Reference Filter Movement Average Time			Position
	Setting Range	Setting Unit	Factory Setting	Setting Validation
	0 to 5100	0.1 ms	0	Valid when DEN = 1

7.4.4 Motion Settings

Motion settings are performed using the following parameters.
Set them according to the machine system.

(1) Positioning Completed Width

Set the width for positioning completed (PSET) in STATUS. When output has been completed (DEN = 1) and the position is within the positioning completed width of the target position (TPOS), PSET will be set to 1.

Pn522	Positioning Completed Width			Position
	Setting Range	Setting Unit	Factory Setting	Setting Validation
	0 to 1073741824	1 reference unit	7	Immediately

INFO

This parameter is used to set the COIN output signal width, but can also be used as the MECHATROLINK II PSET width in STATUS. The COIN output signal width will also be changed.

(2) NEAR Signal Width

Set the width for positioning proximity (NEAR) in STATUS. Regardless of whether or not output has been completed (DEN = 1), when the position is within the positioning proximity width of the target position, NEAR will be set to 1.

上正科技有限公司
購買、維修 此手冊零組件
電話： 037-466333
Email: service@repairtw.com
Line id: @zzzz
www.repairtw.com

Pn524	NEAR Signal Width			Position
	Setting Range	Setting Unit	Factory Setting	Setting Validation
	0 to 1073741824	1 reference unit	7	Immediately

INFO

This parameter is used to set NEAR output signal width, but can also be used as the MECHATROLINK II NEAR width in STATUS. The NEAR output signal width will also be changed.

(3) Home Position Width

Set the home position detection (ZPOINT) width.

Pn524	NEAR Signal width			Position
	Setting Range	Setting Unit	Factory Setting	Setting Validation
	0 to 250	1 reference unit	10	Immediately

(4) Final Travel Distance for External Positioning

Set the distance to move after the external signal input position when external positioning is used. When the direction is negative or the distance very short, a deceleration stop will be performed and the movement begins again in the reverse direction.

Pn814	Final Travel Distance for External Positioning			Position
	Setting Range	Setting Unit	Factory Setting	Setting Validation
	-1073741823 to 1073741823	1 reference unit	100	Valid when DEN = 1

(5) Homing Direction

Set the homing direction. Set to 0 to return in the forward direction and set to 1 to return in the reverse direction.

Parameter		Meaning
Pn816	n.□□□**0**	Forward direction
	n.□□□**1**	Reverse direction

(6) Homing Approach Speed 1

Set the speed after the deceleration limit switch signal turns ON for homing.

Pn817	Homing Approach Speed 1			Position
	Setting Range	Setting Unit	Factory Setting	Setting Validation
	0 to 65535	100 reference units/s	50	Valid when DEN = 1

(7) Homing Approach Speed 2

Set the speed for searching for the home position after the deceleration limit switch signal turns from ON to OFF for homing.

Pn818	Homing Approach Speed 2			Position
	Setting Range	Setting Unit	Factory Setting	Setting Validation
	0 to 65535	100 reference units/s	5	Valid when DEN = 1

上正科技有限公司
購買、維修 此手冊零組件
電話： 037-466333
Email: service@repairtw.com
Line id: @zzzz
www.repairtw.com

(8) Final Travel Distance for homing

Set the distance from latch signal input position to the home position for homing. When the set value of Pn819 is negative or not enough to decelerate, a deceleration stop will be performed and the movement begins again in the reverse direction.

Pn819 **Pn81A**	Final Travel Distance for Homing			Position
	Setting Range	Setting Unit	Factory Setting	Setting Validation
	-1073741823 to 1073741823	1 reference units/s	100	Valid when DEN = 1

7.5 Setting Up the SERVOPACK

This section describes the procedure for setting parameters to operate the SERVOPACK.

7.5.1 Parameters

The SERVOPACK provides many functions and has parameters called parameters that allow the user to specify functions and perform fine adjustments.

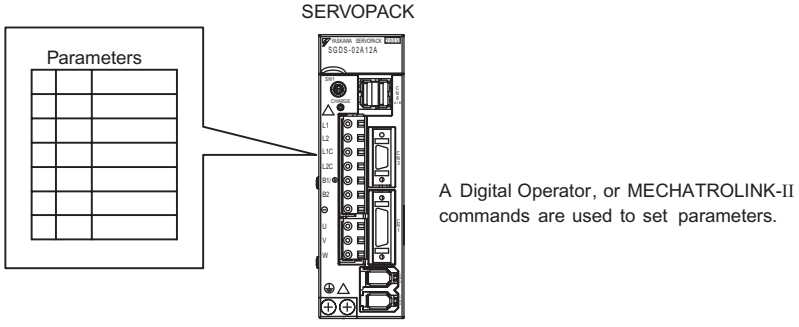

Parameters are divided into the following three groups.

Parameter	Function
Pn000 to Pn825	Specify SERVOPACK functions, set servo gains, etc.
Fn000 to Fn01E	Execute auxiliary functions such as JOG Mode operations and zero-point searches.
Un000 to Un00D	Enable monitoring the motor speed and torque reference on the panel display.

上正科技有限公司
購買、維修、此主機零組件
電話： 037-466333
Email: service@repairtw.com
Line id: @zzzz
www.repairtw.com

Refer to *11.2.2 List of Parameters*.

7.5.2 Input Circuit Signal Allocation

The functions allocated to sequence input signal circuits can be changed. CN1 connector input signals are allocated with the factory settings as shown in the following table.

In general, allocate signals according to the standard settings in the following table.

CN1 Connector Terminal Numbers	Input Terminal Name	Factory Setting	
		Symbol	Name
13	SI0	—	—
7	SI1	P-OT	Forward run prohibited
8	SI2	N-OT	Reverse run prohibited
9	SI3	/DEC	Homing deceleration limit switch
10	SI4	/EXT1	Eexternal latch signal 1
11	SI5	/EXT2	External latch signal 2
12	SI6	/EXT3	External latch signal 3

The following parameter is used to enable input signal allocations. This parameter is set to 1. Do not change this setting.

Parameter		Description
Pn50A	n.□□□**0**	Reserved
	n.□□□**1**	Enables any sequence input signal settings.

(1) Input Signal Allocation

The following signals can be allocated.

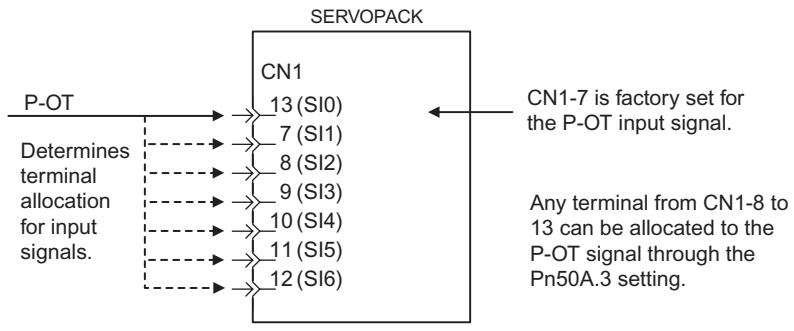

The following table shows the factory settings for input signal selections 1 to 5.

Select the input terminal on the CN1 connector that will be used for each input signal.

Pn50A	Input Signal Selections 1	Factory Setting: 1881
Pn50B	Input Signal Selections 2	Factory Setting: 8882
Pn511	Input Signal Selections 5	Factory Setting: 6543

上正科技有限公司
購買、維修 此手冊零組件
電話： 037-466333
Email: service@repairtw.com
Line id: @ssz
www.repairtw.com

(2) Examples of Input Signal Allocation

The procedure used to allocate sequence input signals is described using the P-OT (forward run prohibited) signal as a typical example.

Parameter		Description	Remarks
Pn50A	0	ON when CN1-13 input signal is ON (L-level)	Signal Polarity: Normal Example: Forward run prohibited signal (P-OT) is valid when high (OFF).
	1	ON when CN1-7 input signal is ON (L-level)	
	2	ON when CN1-8 input signal is ON (L-level)	
	3	ON when CN1-9 input signal is ON (L-level)	
	4	ON when CN1-10 input signal is ON (L-level)	
	5	ON when CN1-11 input signal is ON (L-level)	
	6	ON when CN1-12 input signal is ON (L-level)	
	7	Sets signal ON	Set the forward run prohibited signal (P-OT) so that it is always valid or always invalid.
	8	Sets signal OFF	
	9	OFF when CN1-13 input signal is OFF (H-level)	Signal Polarity: Reversed* Example: Forward run prohibited signal (P-OT) is valid when low (ON).
	A	OFF when CN1-7 input signal is OFF (H-level)	
	B	OFF when CN1-8 input signal is OFF (H-level)	
	C	OFF when CN1-9 input signal is OFF (H-level)	
	D	OFF when CN1-10 input signal is OFF (H-level)	
	E	OFF when CN1-11 input signal is OFF (H-level)	
	F	OFF when CN1-12 input signal is OFF (H-level)	

* Settings 9 through F can be used to reverse signal polarity.

IMPORTANT

If reverse polarity is set for the Forward Run Prohibited or Reverse Run Prohibited signals, the operation may not be safe if broken signal lines occur. You must confirm operational safety when using this function.

As shown in the table above, the P-OT signal can be allocated to any input terminal from CN1-7 to CN1-13. P-OT is always invalid. When Pn50A.3 is set to 7, and so the SERVOPACK will always be in forward run prohibited status.

The P-OT signal is not used when Pn50A.3 is set to 8. This setting is used in the following instances.

- When the factory set input signals are to be replaced by another input signal.
- When the forward run prohibited (P-OT) and the reverse run prohibited (N-OT) input signals are not required in the system configuration for trial or normal operation.

The forward run prohibited (P-OT) and the reverse run prohibited (N-OT) input signals are valid when OFF (high level). The input terminals must therefore be wired so that these signals remain ON (low level) in systems where they are not required. The need to wire these terminals can be eliminated by setting the Pn50A.3 to 8.

INFO

Signals are input with OR logic when multiple signals are allocated to the same input circuit.

(3) Allocating Other Input Signals

Input signal allocation can be changed as shown below.

Input Signal	Parameter		Description
Name	Number	Setting	
Forward Run Prohibited (P-OT)	Pn50A.3	0	ON when CN1-13 input signal is ON (L-level)
		1	ON when CN1-7 input signal is ON (L-level)
		2	ON when CN1-8 input signal is ON (L-level)
		3	ON when CN1-9 input signal is ON (L-level)
		4	ON when CN1-10 input signal is ON (L-level)
		5	ON when CN1-11 input signal is ON (L-level)
		6	ON when CN1-12 input signal is ON (L-level)
		7	Sets signal ON
		8	Sets signal OFF
		9	OFF when CN1-13 input signal is OFF (H-level)
		A	OFF when CN1-7 input signal is OFF (H-level)
		B	OFF when CN1-8 input signal is OFF (H-level)
		C	OFF when CN1-9 input signal is OFF (H-level)
		D	OFF when CN1-10 input signal is OFF (H-level)
		E	OFF when CN1-11 input signal is OFF (H-level)
		F	OFF when CN1-12 input signal is OFF (H-level)
Reverse Run Prohibited (N-OT)	Pn50B.0	0 to F	Same as above.
Forward Current Limit (/P-CL)	Pn50B.1	0 to F	Same as above.
Reverse Current Limit (/N-CL)	Pn50B.2	0 to F	Same as above.
Homing Deceleration LS (/DEC)	Pn511.0	0 to F	Same as above.

上正科技有限公司
購買、維修 此手冊零組件
電話： 037-466333
Email: service@repairtw.com
Line id: @zzzz
www.repairtw.com

Input Signal	Parameter		Description
Name	Number	Setting	
External Latch Signal 1 (/EXT1)	Pn511.1	0 to 3	Sets signal OFF
		4	ON when CN1-10 input signal is ON (L-level)
		5	ON when CN1-11 input signal is ON (L-level)
		6	ON when CN1-12 input signal is ON (L-level)
		7	Sets signal ON
		8	Sets signal OFF
		D	ON when CN1-10 input signal is OFF (H-level)
		E	ON when CN1-11 input signal is OFF (H-level)
		F	ON when CN1-12 input signal is OFF (H-level)
		9 to F	Sets signal OFF
External Latch Signal 2 (/EXT2)	Pn511.2	0 to F	Same as above.
External Latch Signal 3 (/EXT3)	Pn511.3	0 to F	Same as above.

7.5.3 Output Circuit Signal Allocation

Output signal functions can be allocated to the sequence signal output circuits shown below.
In general, allocate signals according to the standard settings in the following table.

上市科技有限公司
購買、維修、出手冊零組件
電話： 037-466333
Email: service@repairhw.com
Line id: @zzzz
www.repairhw.com

CN1 Connector Terminal Numbers	Output Terminal Name	Factory Setting	
		Symbol	Name
1	SO1	/BK+(/SO1+)	General-purpose signal output 1
2		/BK-(/SO1-)	
23	SO2	/SO2+	General-purpose signal output 2
24		/SO2-	
25	SO3	/SO3+	General-purpose signal output 3
26		/SO3-	

The output signal selection parameters and their factory settings are shown below.

Pn50E	Output Signal Selections 1	Factory Setting: 0000
Pn50F	Output Signal Selections 2	Factory Setting: 0100
Pn510	Output Signal Selections 3	Factory Setting: 0000

Select the CN1 connector terminals that will output the signals.

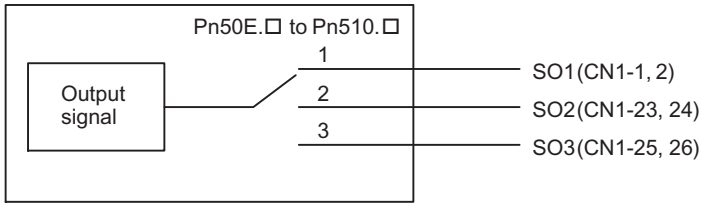

Output Signal	Parameter		Description
	Number	Setting	
Positioning Completed (/COIN)	Pn50E.0	0	Disabled (Not used for the output signal on the left.)
		1	Outputs the signal on the left from the CN1-1 and 2 output terminal.
		2	Outputs the signal on the left from the CN1-23 and 24 output terminal.
		3	Outputs the signal on the left from the CN1-25 and 26 output terminal.
Speed Coincidence Detection (/V-CMP)	Pn50E.1	0 to 3	Same as above*
Rotation Detection (/TGON)	Pn50E.2	0 to 3	Same as above
Servo Ready (/S-RDY)	Pn50E.3	0 to 3	Same as above
Torque Limit Detection (/CLT)	Pn50F.0	0 to 3	Same as above
Speed Limit Detection (/VLT)	Pn50F.1	0 to 3	Same as above
Brake Interlock (/BK)	Pn50F.2	0 to 3	Same as above
Warning (/WARN)	Pn50F.3	0 to 3	Same as above
Near (/NEAR)	Pn510.0	0 to 3	Same as above

上正科技有限公司
購買、維修 此手冊零組件
電話： 037-456333
Email: service@repairtw.com
Line Id: @2222
www.repairtw.com

INFO

Signals are output with OR logic when multiple signals are allocated to the same output circuit. Signals that are not used are invalid.

- Output Signal Reversal

The following parameter can be used to reverse the signals output on output terminals SO1 to SO3.

Pn512	Output Signal Reversal Settings			Position
	Setting Range	Setting Unit	Factory Setting	Setting Validation
	–	–	0000	After restart

The settings specify which of the connector CN1 output signals are to be reversed.

Output Terminals	Parameter		Description
	Number	Setting	
SO1 (CN1-1, 2)	Pn512.0	0	Output signal not reversed.
		1	Output signal reversed.
SO2 (CN1-23, 24)	Pn512.1	0	Output signal not reversed.
		1	Output signal reversed.
SO3 (CN1-25, 26)	Pn512.2	0	Output signal not reversed.
		1	Output signal reversed.

7.5.4 Debug Function

The following parameter is used for the debug function.

- Communications Control Function

This function is used to disable the check functions for communication alarms, for debugging at a trial operation.

For normal operating conditions, set to 0 (with check).

Settings are shown in the following table.

Parameter		Description
Pn800	n.□□□**0**	Check performed. (Factory setting)
	n.□□□**1**	Ignore communications alarm. When a communications alarm occurs, data will be discarded.
	n.□□□**2**	Ignore WDT alarm. Data will be received even if a WDT alarm occurs.
	n.□□□**3**	Ignore both communications and WDT alarm.

7.5.5 Monitoring

The monitoring function allows monitor data to be read using the MECHATROLINK II communications monitoring function and the results displayed on a host controller for adjustment.

(1) Option Monitor

In MECHATROLINK II, the option monitor (OMN1, OMN2) can monitor all signals by setting parameters Pn824 and Pn825. Use the following parameter settings.

上正科技有限公司
購買、維修、此手冊零組件
電話： 037-466333
Email: service@repairtw.com
Line id: @zzzz
www.repairtw.com

Pn824	Option Monitor 1 Selection			Position
	Setting Range	Setting Unit	Factory Setting	Setting Validation
	–	–	0000	Immediately
Pn825	Option Monitor 2 Selection			Position
	Setting Range	Setting Unit	Factory Setting	Setting Validation
	–	–	0000	Immediately

(2) Analog Monitor

The monitor signal of analog monitor can be changed with parameters Pn006 and Pn007.

Pn006	Function Selection Application Switch 6			Position
	Setting Range	Setting Unit	Factory Setting	Setting Validation
	–	–	0002	Immediately
Pn007	Function Selection Application Switch 7			Position
	Setting Range	Setting Unit	Factory Setting	Setting Validation
	–	–	0000	Immediately

7.6 Setting Stop Functions

This section describes the procedure used to stop the SERVOPACK stably.

7.6.1 Using the Dynamic Brake

To stop the servomotor by applying the dynamic brake (DB)[1], set the desired mode in the following parameter. The servomotor will stop due to machine friction if the dynamic brake is not applied.

The SERVOPACK turns OFF under the following conditions:

- When the SV_OFF command is transmitted.
- A servo alarm occurs.
- Main circuit power is turned OFF.

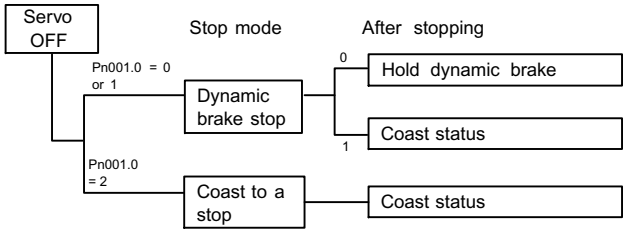

上正科技有限公司
購買、維修 此手冊零組件
電話： 037-466333
Email: service@repairtw.com
Line id: @zzz
www.repairtw.com

Specify the Stop Mode if any of these occurs during operation.

Pn001.0 Setting	Description
0	Uses the dynamic brake to stop the servomotor. Maintains dynamic brake after the servomotor stops. *1
1	Uses the dynamic brake to stop the servomotor. After the servomotor stops, the dynamic brake is activated and the servomotor coasts to a stop.
2	Coasts the servomotor to a stop. *2 The servomotor is turned OFF and motion stops due to machine friction.

* 1. If the servomotor is stopped or moving at extremely low speed, it will coast to a stop.

* 2. A dynamic brake is used when the control power and main power are turned OFF.

IMPORTANT

The dynamic brake is an emergency stop function. Do not repeatedly start and stop the servomotor using the SV_ON/SV_OFF command or by repeatedly turning power ON and OFF.

TERMS

[1] Dynamic brake (DB)

The dynamic brake is a common way of suddenly stopping a servomotor. Built into the SERVOPACK, the dynamic brake suddenly stops a servomotor by electrically shorting its electrical circuit.

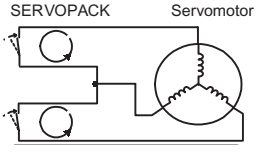

7.6.2 Using the Holding Brake

The holding brake is used when a servodrive controls a vertical axis. In other words, a servomotor with brake prevents the movable part from shifting due to gravity when system power goes OFF.

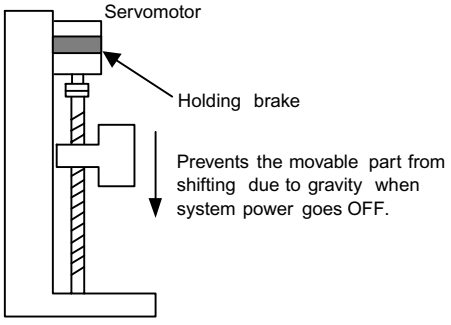

IMPORTANT

The brake built into the SGM□S servomotor with brakes is a de-energization brake, which is used only to hold and cannot be used for braking. Use the holding brake only to hold a stopped servomotor. Brake torque is at least 120% of the rated motor torque.

(1) Wiring Example

上正科技有限公司
購買、維修 此手冊零組件
電話： 037-466333
Email: service@repairtw.com
Line ID: @zzzz
www.repairtw.com

Use the SERVOPACK sequence output signal /BK and the brake power supply to form a brake ON/OFF circuit. The following diagram shows a standard wiring example.

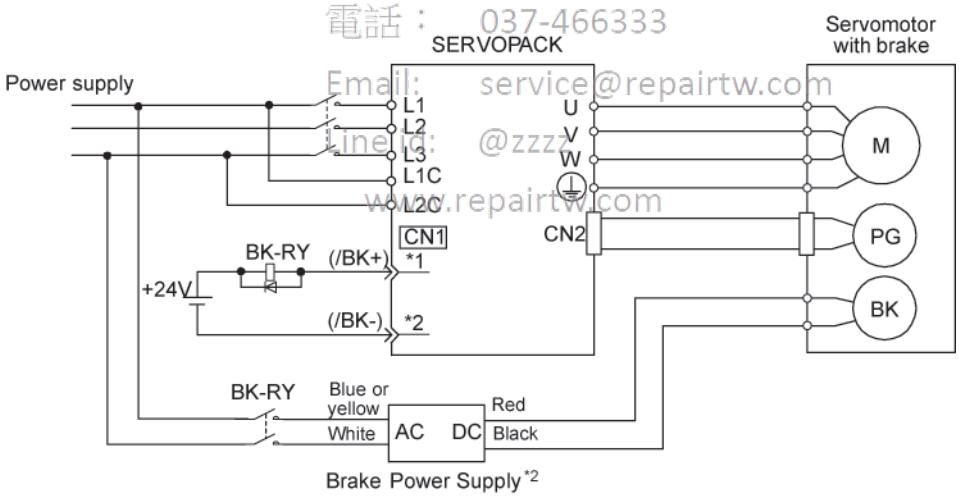

Output → /BK	Brake Interlock Output	Position Control

This output signal controls the brake when using a servomotor with a brake and does not have to be connected when using a servomotor without a brake.

ON:	Closed or low level	Releases the brake.
OFF:	Open or high level	Applies the brake.

- Related Parameters

Pn506	Time Delay from Brake Reference until Servo OFF
Pn507	Speed Level for Brake Reference Output during Servomotor Operation
Pn508	Timing for Brake Reference Output during Servomotor Operation

The output signal in the following parameter must be selected when the /BK signal is used.

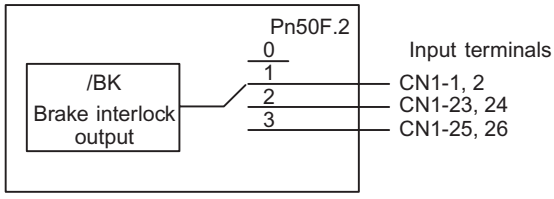

Select the /BK output terminal.

Parameter	Setting	Output Terminal (CN1)	
		*1	*2
Pn50F.2	0	—	—
	1	25	26
	2	27	28
	3	29	30

Note: Do not allocate multiple signals to the same output circuit. Signals are output with OR logic when multiple signals are allocated to the same output circuit.

上正科技有限公司
購買、維修、此手冊零組件
電話： 037-466333
Email: service@repairtw.com
Line id: @ace
www.repairtw.com

(2) Servo OFF Timing When Breaking

If a machine moves slightly because of its weight when the servo is turned OFF though the brake is applied, use the brake reference - the servo OFF delay time (Pn506) to adjust the time between the brake reference and the servo OFF action and the amount of movement.

Pn506	Brake Reference-Servo OFF Delay Time			Position
	Setting Range	Setting Unit	Factory Setting	Setting Validation
	0 to 50	10 ms	0	Immediately

This parameter is used to set the output time from the brake control output signal /BK until the servo OFF operation (servomotor output stop) when a servomotor with a brake is used.

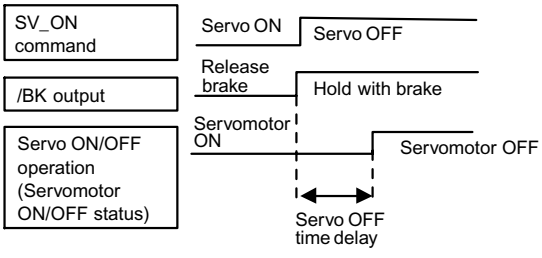

With the standard setting, the SERVOPACK changes to Servo OFF when the /BK signal (brake operation) is output. The machine may move slightly due to gravity depending on machine configuration and brake characteristics. If this happens, use this parameter to delay Servo OFF timing.

This setting sets the brake ON timing when the servomotor is stopped. Use Pn507 and Pn508 for brake ON timing during operation.

IMPORTANT

The servomotor will turn OFF immediately if an alarm occurs. The machine may move due to gravity in the time it takes for the brake to operate.

(3) Holding Brake Setting

Set the following parameters to adjust brake ON timing so the holding brake is applied after the servomotor stops.

Pn507	Brake Reference Output Speed Level during Motor Operation			Position
	Setting Range	Setting Unit	Factory Setting	Setting Validation
	0 to 10000	1 RPM	100	Immediately
Pn508	Waiting Time for Brake Signal when Motor Running			Position
	Setting Range	Setting Unit	Factory Setting	Setting Validation
	10 to 100	10 ms	50	Immediately

Set the brake timing used when the Servo is turned OFF by the SV_OFF command or alarm occurrence during servomotor with brake operation.

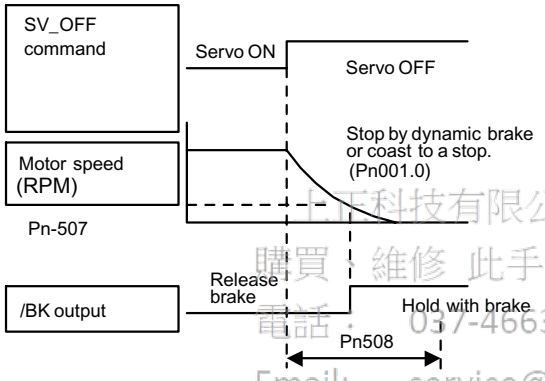

上正科技有限公司
購買、維修 此手冊零組件
電話： 037-466333
Email: service@repairtw.com
Line id: @3333
www.repairtw.com

Brake ON timing when the servomotor stops must be adjusted properly because servomotor brakes are designed as holding brakes. Adjust the parameter settings while observing machine operation.

- /BK Signal Output Conditions During Servomotor Operation

  The circuit is open under either of the following conditions:

  - Motor speed drops below the setting at Pn507 after Servo OFF.
  - The time set at Pn508 has elapsed since Servo OFF.

  The actual setting will be the maximum speed even if Pn507 is set higher than the maximum speed.

7.7 Absolute Encoders

If a servomotor with an absolute encoder is used, a home position setting when the machine setup is stored and normal operation can be performed without homing operation.

7.7.1 Selecting an Absolute Encoder

Select the absolute encoder usage with the following parameter.

“0” in Pn002.2 must be set to enable the absolute encoder.

Parameter		Description
Pn002	n.□**0**□□	Use the absolute encoder as an absolute encoder.
	n.□**1**□□	Use the absolute encoder as an incremental encoder.

Note: This parameter setting goes into effect when the power is turned OFF and ON again after the change has been made.

7.7.2 Absolute Encoder Setup

Perform the setup operation for the absolute encoder in the following circumstances:

- When starting the machine for the first time.
- When an encoder backup error (A.810) occurs.
- When an encoder checksum error (A.820) occurs.
- When the multi-turn data of absolute encoder is to be set to zero.

Perform the setup using a digital operator. The absolute encoder can also be initialized by using a MECHATROLINK II Adjusting (ADJ) command. Refer to *11.3 Using the Adjusting Command (ADJ: 3EH)* for details.

Refer to *11.3 Using the Adjusting Command (ADJ: 3EH)* for details.

上正科技有限公司
購買、維修 此手冊零組件
電話: 037-466333
Email: service@repairtw.com
Line Id: @zzzz
www.repairtw.com

INFO

After the setup processing is finished, turn the power back ON again.

IMPORTANT

1. The absolute encoder setup operation is only possible when the SERVOPACK is Servo OFF.
2. If the following absolute encoder alarms are displayed, perform the setup to reset the alarm. The alarm cannot be reset by a MECHATROLINK Clear Alarm or Warning (ALM_CLR) command.
   - Encoder backup alarm (A.810)
   - Encoder checksum alarm (A.820)

   If any other encoder-related alarm occurs, turn off the power to reset the alarm.

Operation Key	Display	Description
MODE/SET ∧ ∨	BB -FUNCTION- Fn007 Fn008 Fn009 Fn00A	Open the Utility Function Mode main menu and select Fn008.
DATA	BB Multiturn Clear PGCL1	Press the DATA Key. The display is switched to the execution display of Fn008 (Absolute encoder multi-turn reset and encoder alarm reset). Note: If the display is not switched and "NO_OP" is displayed in the status display, the Write Prohibited Setting (Fn010 = 0001) is set. Check the status and reset.
∧ DATA	BB Multiturn Clear PGCL1	Keep pressing the ∧ Key until "PGCL1" is changed to "PGCL5."
DATA	Done Multiturn Clear PGCL5	Press the DATA Key. "BB" in the status display changes to "Done."
MODE/SET	BB -FUNCTION- Fn007 Fn008 Fn009 Fn00A	Press the MODE/SET Key. The display returns to the Utility Function Mode main menu.

上正科技有限公司
購買、維修 此手冊零組件
電話： 037-466333
Email: service@repairtw.com
Line id: @zzzz
www.repairtw.com

INFO

The absolute encoder setup operation is only possible when the SERVOPACK is servo OFF. After the setup processing is finished, turn the power back ON again after setup.

7.7.3 Multi-turn Limit Setting

⚠ WARNING

- Changing the multi-turn limit may change the absolute position data. Be sure to set the multi-turn limit following the controller's designation.
- If the Multi-turn Limit Disagreement (A. CCO) alarm occurs, check the setting of parameter Pn205 in the SERVOPACK to be sure that it is correct.
  If Fn013 is executed when an incorrect value is set in Pn205, an incorrect value will be set in the encoder. The alarm will disappear even if an incorrect value is set, but incorrect positions will be detected. The machine will move to an unexpected positions, resulting in damages to the machine or in a fatal accident..

When implementing absolute detection systems for machines that turn m times in response to n turns in the load shaft, such as circular tables, it is convenient to reset the multi-turn data from the encoder to 0 every m turns. The Multi-turn Limit[1] Setting allows the value m to be set for the encoder.

Select the absolute encoder usage with the following parameter.

"0" in Pn002.2 must be set in order to enable the absolute encoder.

Parameter		Description
Pn002	n.□**0**□□	Use the absolute encoder as an absolute encoder.
	n.□**1**□□	Use the absolute encoder as an incremental encoder.

The multi-turn limit is set in the SERVOPACK using the following parameter.

Pn205	Multi-turn Limit Setting			Position
	Setting Range	Setting Unit	Factory Setting	Setting Validation
	0 to 65535	1 rev	65535	After restart

If the Multi-turn Limit Setting is set to 65535 (factory setting), the multi-turn data will vary from -32768 to 32767. If any other value is set, the multi-turn data will vary from 0 to the setting of Pn205.

If the servomotor rotates in the negative direction from 0, the multi-turn data will change to the value set in Pn205. If the servomotor rotates in the positive direction from the value set in Pn205, the multi-turn data will change to 0. Set Pn205 to m - 1.

INFO

The setting is enabled by turning OFF the control power and turning it ON again.

上位科技有限公司
購買、維修 此手冊零組件
電話： 037-466333
Email: service@repairtw.com
Line Id: @2222
www.repairtw.com

TERMS

[1] Multi-turn limit

The upper limit of multi-turn data. The multi-turn data will vary between 0 and the value of Pn205 (multi-turn limit setting) .

Change the setting using the following procedure.

1. Change the multi-turn limit setting (Pn205), and then turn OFF the SERVOPACK control power and turn it ON again. The alarm A.CC0 occurs. The multi-turn limit value for the encoder is setting 65535, the same as for the SERVOPACK's factory setting. Therefore, if only the multi-turn limit value for the SERVOPACK is changed, the alarm occurs.

   Alarm Name: Multi-turn Limit Disagreement

Alarm Display	Explanation
A.CC0	The multi-turn limit values for the encoder and SERVOPACK are different.

2. The multi-turn limit value for the encoder must be set to the same value as that for the SERVOPACK. Change the multi-turn limit value for the encoder using the following procedure.

   Use a digital operator for the following operation. This operation is enabled only while the alarm A.CC0 occurs.

   - Refer to *11.3.3 Multi-turn Limit Setting* for details about how to use the adjusting command (ADJ: 3EH).

Operation Key	Display	Description
MODE/SET ∧ ∨	A.CC0 -FUNCTION- Fn012 Fn013 Fn016 Fn017	Open the Utility Function Mode main menu and select Fn013.
DATA	A.CC0 Multiturn Limit Set Start : [DATA] Return: [SET]	Press the DATA Key. The display is switched to the setting display of Fn013 (Multi-turn Limit Value Setting Change When a Multi-turn Limit Disagreement Alarm (A.CC0) Occurs). Note: If the display is not switched and "NO-OP" is displayed in the status display, the Write Prohibited Setting (Fn010 = 0001) i s set. Check the setting and reset.
DATA	Done Multiturn Limit Set Start : [DATA] Return: [SET]	Press the DATA Key to set the multi-turn limit value. When the setting is completed, "Done" is displayed in the status display. Turn the power Off then ON to update the multi-turn limit setting. Note: Press the MODE/SET Key not to set the value. The display returns to the Utility Function Mode main menu.
Turn OFF the power, and then turn it ON again to make the setting valid.		

上正科技有限公司
購買、維修 此手冊零組件
電話： 037-466333
Email: service@repairtw.com
Line id: @zzzz
www.repairtw.com

INFO

The multi-turn limit setting in the encoder can be changed only while the Multi-turn Limit Disagreement (A.CC0) has occurred. The setting is enabled by turning OFF the control power and turning it ON again.

7.7.4 Absolute Encoder Home Position Offset

When an absolute encoder is used, the offset between the encoder position and the feedback position (APOS) can be set.

Pn808 Pn809	Absolute Home Position Offset			Position
	Setting Range	Setting Unit	Factory Setting	Setting Validation
	-1073741823 to 1073741823	1 reference unit	0	Immediately

Settings are as shown in the following figure. To set encoder position (X) as the machine home position (0), set Pn808 to -X.

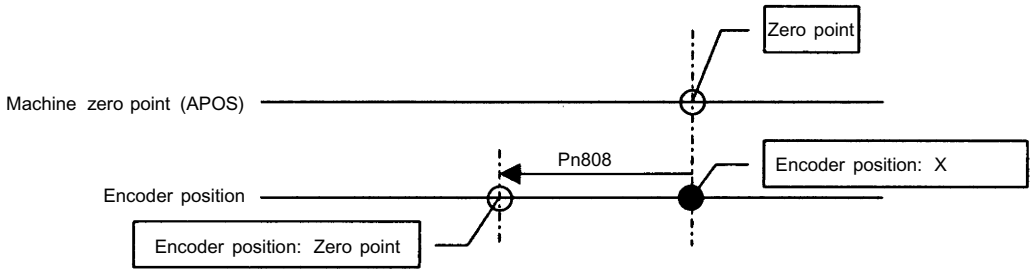

上正科技有限公司
購買、維修 此手冊零組件
電話： 037-466333
Email: service@repairtw.com
Line id: @zzzz
www.repairtw.com

上正科技有限公司
購買、維修 此手冊零組件
電話： 037-466333
Email: service@repairtw.com
Line id: @zzzz
www.repairtw.com

8

Adjustments

8.1 Autotuning - 8-3
8.1.1 Servo Gain Adjustment Methods - 8-3
8.1.2 List of Servo Adjustment Functions - 8-4

8.2 Normal Autotuning - 8-7
8.2.1 Normal Autotuning - 8-7
8.2.2 Normal Autotuning Procedure - 8-8
8.2.3 Selecting the Normal Autotuning Execution Method - - - - - - - - - - - - - 8-9
8.2.4 Machine Rigidity Setting for Normal Autotuning - - - - - - - - - - - - - - - 8-10
8.2.5 Method for Changing the Machine Rigidity Setting - - - - - - - - - - - - - 8-11
8.2.6 Saving the Results of Normal Autotuning - - - - - - - - - - - - - - - - - - - 8-12
8.2.7 Procedure for Saving the Results of Normal Autotuning - - - - - - - - - 8-12

8.3 Advanced Autotuning - 8-13
8.3.1 Advanced Autotuning - 8-13
8.3.2 Advanced Autotuning Procedure - 8-15

8.4 One-parameter Autotuning - 8-18
8.4.1 One-parameter Autotuning - 8-18
8.4.2 One-parameter Autotuning Procedure - 8-18

8.5 Manual Tuning - 8-20
8.5.1 Explanation of Servo Gain - 8-20
8.5.2 Servo Gain Manual Tuning - 8-20
8.5.3 Position Loop Gain - 8-21
8.5.4 Speed Loop Gain - 8-22
8.5.5 Speed Loop Integral Time Constant - 8-22

上正科技有限公司
購買、維修 此手冊零組件
電話： 037-466333
Email: service@repairtw.com
Line id: @zzzz
www.repairtw.com

8.6 Servo Gain Adjustment Functions - - - - - - - - - - - - - - - - - - - 8-23
8.6.1 Feed Forward Reference - 8-23
8.6.2 Using the Mode Switch (P/PI Switching) - 8-24
8.6.3 Setting the Speed Bias - 8-28
8.6.4 Speed Feedback Filter Time Constant - 8-28
8.6.5 Speed Feedback Compensation - 8-28
8.6.6 Switching Gain Settings - 8-30
8.6.7 Predictive Control - 8-35
8.6.8 Less Deviation Control - 8-40
8.6.9 Torque Reference Filter - 8-46
8.6.10 Vibration Suppression on Stopping - 8-48
8.6.11 Backlash Compensation - 8-49
8.6.12 Position Integral - 8-49

8.7 Analog Monitor - 8-50

上正科技有限公司
購買、維修 此手冊零組件
電話： 037-466333
Email: service@repairtw.com
Line id: @zzzz
www.repairtw.com

8.1 Autotuning

8.1.1 Servo Gain Adjustment Methods

The servo gains are factory-set to stable values, and responsiveness can be increased depending on the actual machine conditions. The following flowchart shows an overview procedure for adjusting the servo gains to reduce the positioning time for position control. Follow this flowchart to effectively adjust the servo gains. For functions in bold lines in the flowchart, select the adjustment method according to the client's intent using *8.1.2 List of Servo Adjustment Functions*.

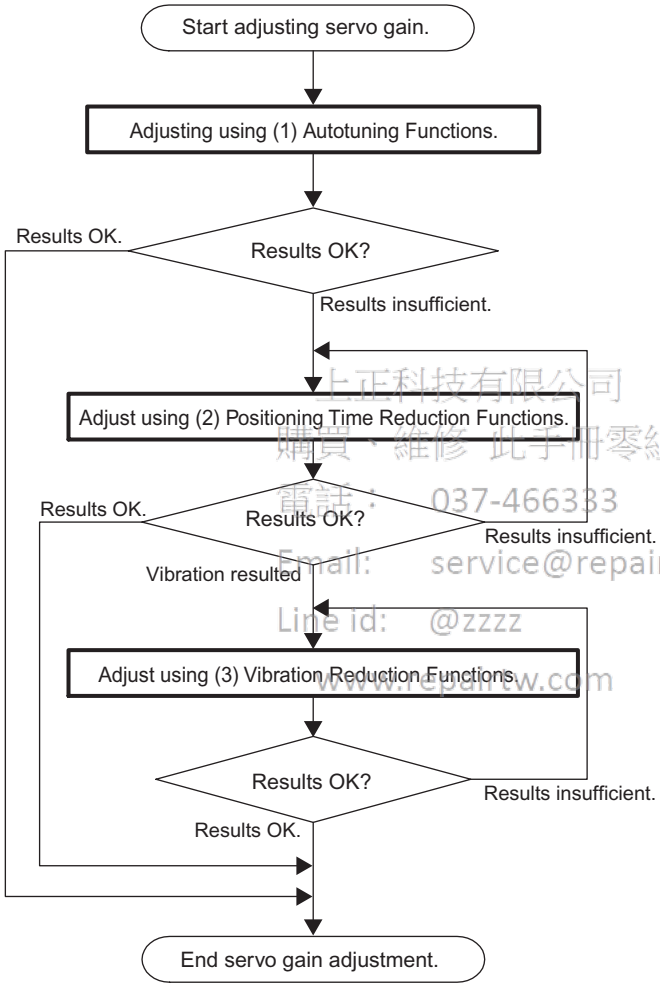

上正科技有限公司
購買、維修 此手冊零組件
電話： 037-466333
Email: service@repairtw.com
Line id: @zzzz
www.repairtw.com

If the desired responsiveness cannot be achieved adjusting according to the servo gain adjustment methods, consider the following possible causes.

- Autotuning does not suit the operating conditions.⇒Adjust gain with manual adjustments (Refer to *8.5 Manual Tuning*)
- The selection of settings for the positioning time reduction functions or vibration reduction functions are not appropriate.
  ⇒ The result of each function may differ depending on the machine characteristics and operation condtions.
  Consider using other positioning and vibration reduction functions.

8.1.2 List of Servo Adjustment Functions

(1) Autotuning Functions

Autotuning calculates the load moment of inertia, which determines the servo drive responsiveness, and automatically adjusts parameters, such as the Speed Loop Gain Kv (Pn100), Speed Loop Integral Time Constant Ti (Pn101), Position Loop Gain Kp (Pn102), 1st Step 1st Torque Reference Filter Time Constant (Pn401). Refer to the following table to select the appropriate autotuning function for your desired purpose and adjust the servo gains.

Function Name and Related Parameters	Description	Guidelines for Selection	Reference Section
Normal Autotuning Pn110.0 Fn001 Fn007	A new algorithm is used to increase the calculation accuracy of Σ II autotuning calculation accuracy for the load moment of inertia, increase stability, and eliminate restrictions. Setting methods for the Machine Rigidity Setting (Fn001) have been reviewed to make the settings easier to use and provide more stable settings. The load moment of inertia is calculated during operation for a user reference, and the servo gains (Kv, Ti, Kp, and Tf) are set according to the Machine Rigidity Setting (Fn001).	Only the minimum number of parameters must be set for autotuning using a normal operation reference. This is the most basic autotuning function.	8.2
Advanced Autotuning Fn017	With advanced autotuning, the amounts that the gains can be increased for the SERVOPACK are determined automatically and a notch filter is automatically adjusted while detecting vibration to find servo gains suitable for the machine characteristics. This autotuning function is performed using utility function Fn017. Automatic round-trip operation is performed for the specified pattern and the load moment of inertia, servo gains (Kv, Ti, Kp, and Tf), and notch filter frequency are automatically set.	Advanced autotuning is used to improve characteristics when the results of normal autotuning are unsuitable. A motion stroke for the number of positioning reference units to perform the automatic operation must be confirmed and parameters, such as the speed, must be set. High-performance servo gain settings can be achieved by setting only the automatic operation.	8.3
One-parameter Autotuning Fn01A	For one-parameter autotuning, the load moment of inertia is not calculated and the four servo gains (Kv, Ti, Kp, Tf) can be adjusted using a single parameter. This autotuning function is made to assist adjustments, and it is performed using utility function Fn01A. During operation with a user reference, by changing one parameter change and set the four servo gains simultaneously. The four gains are set from the one parameter to satisfy a stable relationship between them.	One-parameter autotuning is used when the user wants to adjust the servo gains while confirming the response of the servo or machine. One-parameter autotuning can be used to eliminate the need to manually adjust parameters while quickly obtaining safe adjustments. The user must observe the response waveform on an external measuring instrument and determine the results of autotuning.	8.4

上正科技有限公司
購買、維修 此手冊委託供
電話：03-2462333
Email: service@repairtw.com
Line Id: @2222
www.repairtw.com

(2) Positioning Time Reduction Functions

Function Name and Related Parameters	Description	Features	Valid Control Modes	Reference Section
Feed-forward Pn109 Pn10A	Feed-forward compensation for the position reference is added to the speed reference.	Adjustment is easy. The system will be unstable if a large value is set, possibly resulting in overshooting or vibration.	Position	8.6.1
Mode Switch (P/PI Switching) Pn10B Pn10C Pn10D Pn10E Pn10F	Switches from PI control to P control using the value of an internal servo variable in a parameter (torque, speed, acceleration, or position error) as a threshold value.	Automatic switching between PI and P control is easily set.	Position Speed	8.6.2
Speed Feedback Compensation Pn110 Pn111	Compensates the motor speed using an observer.	Adjustment is easy because the compensation can be set as a percentage. If the speed loop gain increases, the position loop gain also increases, however sometimes the servo rigidity decreases.	Position Speed	8.6.5
Gain Switching Pn100 Pn101 Pn102 ▪ ▪ ▪	Four parameters, speed loop gain (Kv), speed loop integral time constant (Ti), position loop gain (Kp), and 1st Step 1st torque reference filter time constant (Tf), are used as conditions for switching and switching is performed on an external signal.	Automatic gain switching is easily achieved using only servo parameter. The user must select the conditions for switching.	Position Speed	8.6.6
Predictive Control Pn150 Pn151 Pn152	Predictive control is performed to reduce following error for the position reference.	Adjustment is possible with only one or two parameters.	Position	8.6.7
Less Deviation Control Pn119 Pn11A Pn11E ▪ ▪ ▪	Minimizes the error during movement for position control to reduce settling time and to reduce locus tracking error.	Adjustment is easy using a single level with Fn015.	Position	8.6.8

上可科技有限公司
購買、維修、出售、手柄委託代
電話： 037-466333
Email: service@repairtw.com
Line id: @zzzz
www.repairtw.com

(3) Vibration Reduction Functions

Function Name and Related Parameters	Description	Features	Valid Control Modes	Reference Section
Soft Start Pn305 Pn306	Converts a stepwise speed reference to a constant acceleration or deceleration for the specified time interval.	A constant acceleration/deceleration is achieved for smoother operation. The operation time is delayed by the set time.	Speed	–
Acceleration/ Deceleration Filters Pn810 Pn811	A 1st-order delay filter for the position reference input.	Enables smooth operation. The reference time increases by the filter delay time even after the reference input has been completed.	Position	–
Movement Average Filter Pn812	A movement averaging filter for the position reference input.	Enables smooth operation. The reference time increases by the filter delay time even after the reference input has been completed.	Position	–
Speed Feedback Filter Pn308	A standard 1st-order delay filter for the speed feedback.	The feedback speed is smoother. The response is delayed if a larger value is set.	Position Speed	8.6.4
Torque Reference Filters Pn401 Pn40F to Pn414	A series of three filter time constants, 1st-order, 2nd-order, and 1st-order, can be set in order for the torque reference.	These filters are effective in essentially all frequency bands. The response is delayed if a larger value (low frequency) is set.	Position Speed Torque	8.6.9
Vibration Suppression on Stopping Pn420 Pn421	A damping coefficient is applied to the change in the torque reference when stopping.	The variation in the torque is decreased when stopping. Disturbance characteristics are decreased.	Position	8.6.10
Notch Filters Pn408 to Pn40D	A series of two notch filters can be set for the torque reference. A notch width is possible for each.	Mainly effective for vibration between 500 and 2,000 Hz. Instability will result if the setting is not correct. As a utility function for the notch filters settings, for frequency characteristics, there is a Online Vibration Monitor (Fn018) and EasyFFT (Fn019).	Position Speed Torque	8.6.9

上正科技有限公司
購買、維修 此手冊零組件
電話： 037-466333
Email: service@repairtw.com
Line id: @zzzz
www.repairtw.com

8.2 Normal Autotuning

8.2.1 Normal Autotuning

Normal autotuning calculates the load moment of inertia during operation of the SERVOPACK and sets parameters so that the servo gains consistent with the Machine Rigidity setting during normal (Fn001) are achieved.

Normal autotuning may not be effective in the following cases.

- The load moment of inertia varies in less than 200 ms.
- The rotational speed is higher than 100 RPM or the acceleration reference is very even.
- Load rigidity is low and mechanical vibration occurs easily, such as a belt-driven mechanism, or a friction is high.
- The speed reference is a stepwise reference.

If your system's operation conditions include any of these above or the desired system performance could not be obtained after having executed normal autotuning, try the following operations.

- Execute advanced autotuning.
- Set the Moment of Inertia Ratio (Pn103), and execute one-parameter autotuning or manual tuning.

The following utility function is also available for normal autotuning.

Fn007: Writes the load moment of the inertia calculation results obtained by normal autotuning to parameter Pn103, and uses the result as the default value for the next calculation.

全球科技有限公司
購買、維修 此手冊零組件
電話： 037-466333
Email: service@repairtw.com
Line id: @zzzz
www.repairtw.com

8.2.2 Normal Autotuning Procedure

⚠ WARNING

- Do not perform extreme adjustment or setting changes.
  Failure to observe this warning may result in unstable servo operation and/or injury.
- Adjust the gains slowly while confirming motor operation.

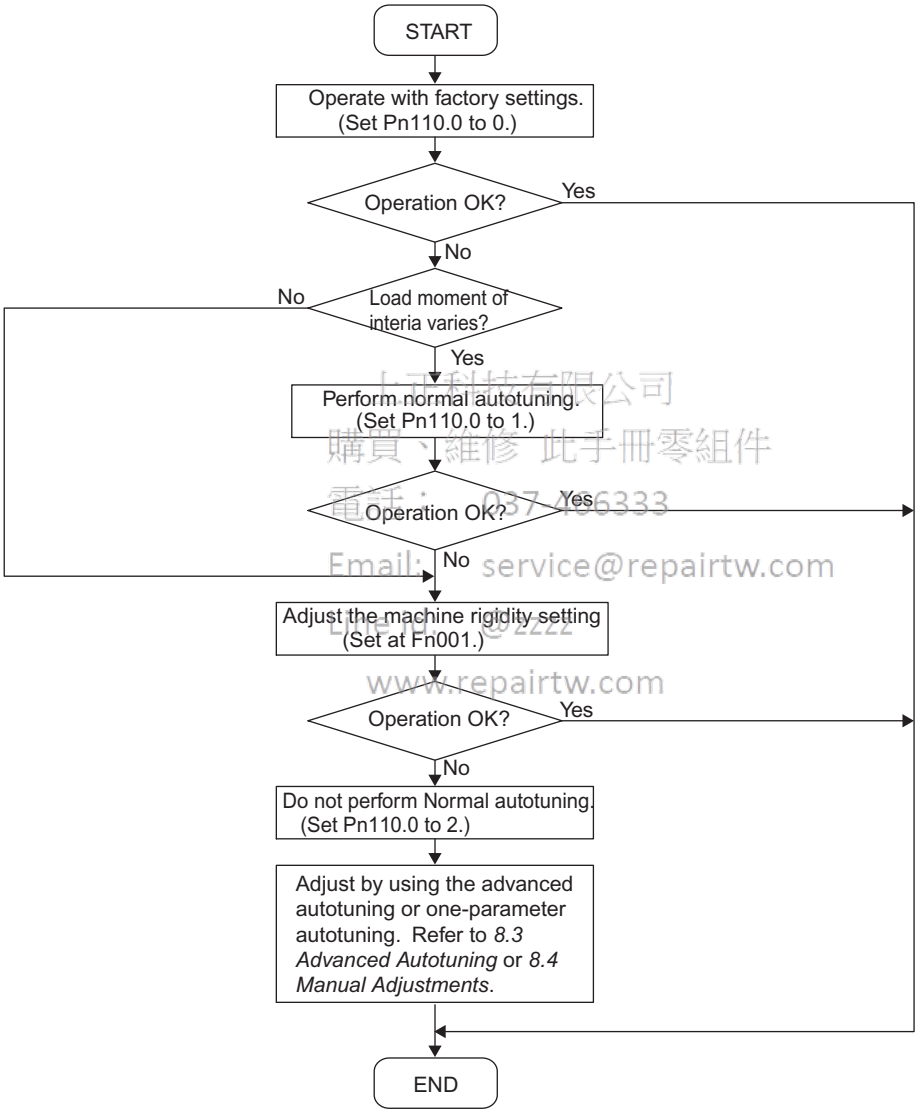

上可科技有限公司
購買、維修 此手冊零組件
電話： 037-466333
Email: service@repairtw.com
Line ID: @9222
www.repairtw.com

8.2.3 Selecting the Normal Autotuning Execution Method

There are three methods that can be used for normal autotuning: At start of operation, constantly, and none. The selection method is described next.

Pn110	Normal Autotuning Switches			Speed / Position
	Setting Range	Setting Unit	Factory Setting	Setting Validation
	–	–	0012	Required

Parameter		Meaning
Pn110	n.□□□**0**	Normal autotuning is preformed only after the first time power is turned ON. (Factory Setting)
	n.□□□**1**	Normal autotuning (moment of inertia calculations) are performed continuously.
	n.□□□**2**	Normal autotuning is not performed.

The factory setting is n.□□□0. This setting is recommended for applications in which the load moment of inertia does not change much or if the load moment of inertia is not known. The moment of inertia calculated at the beginning of operation is used continuously. In this case, differences in machine status and operation references at the beginning of operation may cause minor differences in the calculation results of the load moment of inertia, causing differences in the SERVOPACK responsiveness each time the power supply is turned ON. If this occurs, overwrite Pn103 (Moment of Inertia Ratio) with the load moment of inertia in Fn007 (Save moment of inertia ratio data obtained from normal autotuning) and set Pn110 to n.□□□2 to disable normal autotuning.

The setting n.□□□1 is used when the load moment of inertia varies constantly. This setting enables a consistent responsiveness even when the load moment of inertia changes. If the load moment of inertia changes in less than 200 ms, however, the autotuning accuracy will deteriorate, in which case Pn110.0 should be set to 0 or 2.

The setting n.□□□2 is used when normal autotuning is not possible, when the load moment of inertia is known and the moment of inertia ratio is set in Pn103 to perform advanced autotuning with Fn017 or one-parameter autotuning with Fn01A, when performing adjustments manually, or any other time the normal autotuning function is not going to be used.

正修科技有限公司
購買、維修、出租各類伺服馬達、減速機、電子零組件
電話：03-4663333
Email: service@repairtw.com
Line id: @zzzz
www.repairtw.com

8.2.4 Machine Rigidity Setting for Normal Autotuning

There are ten machine rigidity settings for normal autotuning. When the machine rigidity setting is selected, the servo gains (Speed Loop Gain, Speed Loop Integral Time Constant, Position Loop Gain, and Torque Reference Filter Time Constant) are determined automatically. The factory setting for the machine rigidity setting is 4. The speed loop is suitable for PI or I-P control.

When parameter Pn10B.1 is 0, PI control will be used and when Pn10B.1 is 1, I-P control will be used. To switch the type of control, however, the power supply must be turned ON again after setting the parameters.

After the power supply is turned ON again, always reset the machine rigidity setting. When the machine rigidity setting after the Position Loop Gain (Pn102) is changed, however, a value near the Position Loop Gain (Pn102) will be displayed for the machine Rigidity Setting.

(1) Speed Loop PI Control

Machine Rigidity Setting Fn001	Position Loop Gain [0.1s^{-1}] Pn102	Speed Loop Gain [0.1Hz] Pn100	Speed Loop Integral Time Constant [0.01 ms] Pn101	1st Step 1st Torque Reference Filter Time Constant [0.01 ms] Pn401	Step Response Convergence Time [ms]*	
					Position Control	Speed Control
1	15.0	15.0	60.00	2.50	200	32
2	20.0	20.0	45.00	2.00	150	24
3	30.0	30.0	30.00	1.30	100	16
4	40.0	40.0	20.00	1.00	75	12
5	60.0	60.0	15.00	0.70	50	8
6	80.0	80.0	10.00	0.50	35	6
7	100.0	100.0	8.00	0.40	30	5
8	120.0	120.0	7.00	0.35	25	4
9	140.0	140.0	6.00	0.30	21	3
10	160.0	160.0	5.00	0.25	18	3

* Step Response Convergence Time: The time required to reach a 95% output for a step input.

上正科技有限公司
購買、維修 此手冊零組件
電話： 037-466333
Email: service@repairtw.com
Line id: @zzzz
www.repairtw.com

(2) Speed Loop I-P Control

Machine Rigidity Setting Fn001	Position Loop Gain [0.1s^{-1}] Pn102	Speed Loop Gain [0.1Hz] Pn100	Speed Loop Integral Time Constant [0.01 ms] Pn101	1st Step 1st Torque Reference Filter Time Constant [0.01 ms] Pn401	Step Response Convergence Time [ms]*	
					Position Control	Speed Control
1	15.0	15.0	18.00	2.50	200	32
2	20.0	20.0	14.00	2.00	150	24
3	30.0	30.0	9.00	1.30	100	16
4	40.0	40.0	7.00	1.00	75	12
5	60.0	60.0	4.50	0.70	50	8
6	80.0	80.0	3.50	0.50	38	6
7	100.0	100.0	3.00	0.40	30	5
8	120.0	120.0	2.50	0.35	25	4
9	140.0	140.0	2.00	0.30	13	3
10	160.0	160.0	2.00	0.25	15	3

* Step Response Convergence Time: The time required to reach a 95% output for a step input.

If the machine rigidity setting is changed greatly, the servo gain will increase and positioning time will decrease. If the setting is too large, however, vibration may result depending on the machine configuration. Set the machine rigidity starting at a low value and increasing it within the range where vibration does not occur.

"The advanced autotuning function" is provided to automatically determine the range in which vibration does not occur. Refer to *8.3 Advanced Autotuning*.

8.2.5 Method for Changing the Machine Rigidity Setting

The machine rigidity setting is changed in utility function mode using parameter Fn001. The procedure is given below.

Operation Key	Display	Description
MODE/SET ∧ ∨	BB -FUNCTION- Fn000 Fn001 Fn002 Fn003	Display the main menu of the utility function mode, and select the utility function Fn001.
DATA	BB Machine Rigidity Settings for Online Autotuning 04	Press the DATA Key. Then, the screen changes to the execution display of the machine rigidity setting (Fn001). * If the screen does not change and NO-OP is displayed as the status, a write prohibited password has been saved in Fn010. Clear the write prohibited password if possible.
∧ ∨	BB Machine Rigidity Settings for Online Autotuning 06	Press the ∧ or ∨ Key to select the machine rigidity.
DATA	Done Machine Rigidity Settings for Online Autotuning 06	Press the DATA Key to write the specified rigidity to the SERVOPACK. * DONE appears as the status display when the write processing has been completed.

正邦科技有限公司
購買、維修 此手冊零組件
電話: 037-466333
Email: service@repairtw.com
Line id: @zzzz
www.repairtw.com

This completes changing the machine rigidity setting for normal autotuning.

8.2.6 Saving the Results of Normal Autotuning

⚠ CAUTION

- Always set the correct moment of inertia ratio when normal autotuning is not used.
  If the moment of inertia ratio is set incorrectly, vibration may occur.

For normal autotuning, the most recent load moment of inertia is calculated and the control parameters are adjusted to achieve response suitable for the machine rigidity setting. When normal autotuning is performed, the Position Loop Gain (Pn102), Speed Loop Gain (Pn100), and Speed Loop Integral Time Constant (Pn101) are saved. When the power supply to the SERVOPACK is turned OFF, however, the calculated load moment of inertia is lost and the factory setting is used as the default value to start autotuning the next time the power supply is turned ON.
To use the calculated load moment of inertia as the default value the next time the power supply is turned ON, the utility function mode parameter Fn007 (Save moment of inertia ratio data obtained from normal autotuning) can be used to save the most recent value in parameter Pn103 (Moment of Inertia Ratio). The moment of inertia ratio is given as the moment of inertia ratio (%) of the rotor moment of inertia of the servomotor.

Pn103	Moment of Inertia Ratio			Speed / Position / Torque
	Setting Range	Setting Unit	Factory Setting	Setting Validation
	0 to 20000%	1%	0%	Immediately

$$\text{Moment of inertia ratio} = \frac{\text{Motor axis conversion load moment of inertia } (J_L)}{\text{Roter moment of inertia } (J_M)}$$

The factory setting for the moment of inertia ratio is 0% (no-load condition for stand-alone servomotor).

上正科技有限公司
購買 維修 技術服務 零組件
電話： 037-466333
Email: service@repairtw.com
Line id: @zzzz
www.repairtw.com

8.2.7 Procedure for Saving the Results of Normal Autotuning

The following procedure is used to save the results of normal autotuning

Operation Key	Display	Description
MODE/SET ∧ ∨	BB -FUNCTION- Fn000 Fn007 Fn002 Fn003	Display the main menu of the utility function mode, and select the utility function Fn007.
DATA	BB Storing Results of AutoTuning <Moment of Inertia ratio> d. 0300	Press the DATA Key. Then, the screen changes to the execution display of the saving the result of normal autotuning (Fn007). * If the screen does not change and NO-OP is displayed as the status, a write prohibited password has been saved in Fn010. Clear the write prohibited password if possible.
DATA	Done Storing Results of AutoTuning <Moment of Inertia ratio> d. 0300	Press the DATA Key to write the moment of inertia ratio to the SERVOPACK. DONE appears as the status display when the write processing has been completed. Press the MODE/SET Key if the moment of inertia ratio is not required to write to the SERVOPACK. Then, the screen returns to the main menu of the utility function mode.

This completes saving the default value for the moment of inertia ratio for normal autotuning. The next time the power supply is turned ON, the value that was saved for the Moment of Inertia Ratio (Pn103) will be used to start normal autotuning.

8.3 Advanced Autotuning

8.3.1 Advanced Autotuning

Advanced autotuning calculate the load moment of inertia and set the servo gain suitable for the machine charateristics. The gain is set as high as possible to avoid the vibration. Advanced autotuning is performing using utility function Fn017 (Advanced Autotuning). If vibration occurs during advanced autotuning, either set a notch filter or lower the servo gains, depending on circumstances.

The following parameter settings are changed by the advanced autotuning.

- Speed loop gain (Pn100)
- Speed loop integral time constant (Pn101)
- Position loop gain (Pn102)
- 1st Step 1st torque reference filter time constant (Pn401)
- Moment of inertia ratio (Pn103)

The following parameter settings are changed if required.

- Torque related function switch (Pn408.0 or Pn408.2)
- 1st step notch filter frequency (Pn409)
- 2nd step notch filter frequency (Pn40C)

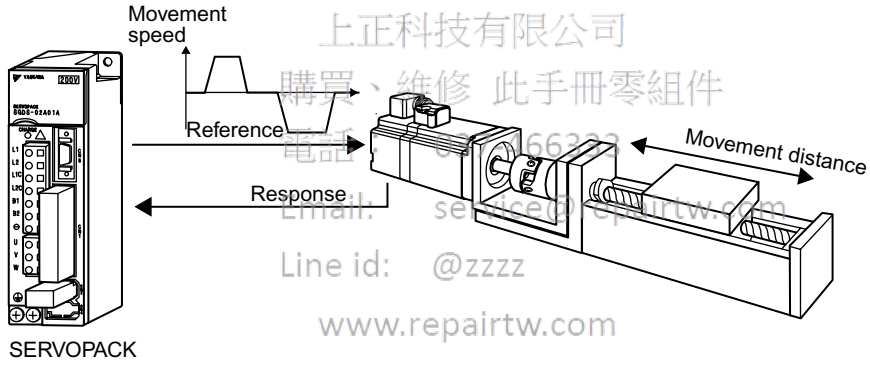

上正科技有限公司
購買、維修 此手冊零組件
電話: 03-3166333
Email: service@repairtw.com
Line id: @zzzz
www.repairtw.com

Advanced Autotuning Operation Example

Advanced autotuning may not be effective in the following cases.

- The load moment of inertia varies in less than 200 ms.
- The rotational speed is higher than 100 RPM or the speed uses a stepwise reference.
- Load rigidity is low and mechanical vibration occurs easily or viscous friction is high.
- The movement range is too narrow, e.g., only a few rotations.
- There is movement in only one direction.
- When P control operation (proportional control) is used.

If the desired operation is not achieved for advanced autotuning in the above conditions, calculate values from machine specifications and set the load moment of inertia ratio in Pn103 and then perform one-parameter autotuning or manual adjustment.

IMPORTANT

1. Advanced autotuning performs automatic operation accompanied by vibration. Ensure that an emergency stop is possible while advanced autotuning is being performed. Also, confirm the range and direction of motion and provide protective devices to ensure safety in the event of overtravel or other unexpected movement. Normally, set the level in step 5 showed in 8.3.2 to “normal” or “lose”.
2. This function can select “Not estimates moment of inertia ratio (MODE:1),” but in this case, set the correct moment of inertia ratio in Pn103 before using this function.
3. Advanced autotuning sets the servo gain according to the Positioning Completed Width (Pn522).
   Set the Positioning Completed Width to the value that will be used in normal operation.
4. Make sure that the following are properly set before starting the advanced autotuning.
   - The main circuit power is input.
   - The servo is OFF.
   - Overtravel does not occur in the servomotor. The forward run prohibited (P-OT) and reverse run prohibited (N-OT) signals are not input.
   - Pn110 = n.□□□2 (Performs manual tuning but not normal autotuning)
   - Pn10B = n.□2□□ (Less deviation control is not used)
   - Pn200=n.□0□□ (Clears position error pulse at the baseblock)
   - The Clear signal is at L (low) level (Not to clear).
   - Pn150 = □□□0 (Predictive control is not used)

上正科技有限公司
購買、維修 此手冊零組件
電話： 037-466333
Email: service@repairtw.com
Line id: @zzzz
www.repairtw.com

8.3.2 Advanced Autotuning Procedure

The following procedure is used for advanced autotuning.

Operation Key	Display	Description
MODE/SET ∧ ∨	BB -FUNCTION- Fn016 Fn017 Fn018 Fn019	Display the main menu of the utility function mode, and select Fn017.
DATA	BB ADVANCED AT MODE = 0 LEVEL = 0 STROKE = +00300000	Press the DATA Key. The screen changes to that of the advanced autotuning initial setting (ADVANCED AT). *If the screen does not change and NO-OP is displayed as the status, the write prohibited password is set in Fn010. Check the status and cancel the password.
∧ ∨ SCROLL < >	BB ADVANCED AT MODE = 0 LEVEL = 0 STROKE = +00300000	Make the initial settings for advanced autotuning, using the ∧, ∨, or SCROLL Key. To set the stroke, move the cursor with the < and > Keys.

Settings for Advanced Autotuning

MODE (Calculation of load moment of inertia)

0: To calculate the value of the load moment of inertia

1: Not to calculate the value of the load moment of inertia

LEVEL (Gain setting level)

0: Loose (50% of the gain where vibration occurs or 60% of the gain limit, Kv = 15 Hz to 100 Hz; about five seconds to complete the tuning)

1: Normal (70% of the gain where vibration occurs or 70% of the gain limit, Kv = 30 Hz to 140 Hz; about 10 seconds to complete the tuning)

2: Tight (100% of the gain where vibration occurs or 80% of the gain limit, Kv = 40 Hz to 200 Hz; about 30 seconds to complete the tuning)

STROKE (Travel distance) setting range

= -99,990,000 to + 99,990,000 (1000 reference units)

Specify the range of the travel distance from the current value. The initial value of 300,000 reference units is equivalent to the number of pulses for 10 rotations with the electronic gear ratio set to 1/4 (factory setting) detected by a standard 17-bit encoder. The negative (-) direction is for reverse rotation, and the positive (+) direction is for forward rotation.

*If the travel distance (STROKE) is set too short, the moment of inertia may not be calculated correctly. Set the maximum travel distance within the machine working range.

DATA	BB ADVANCED AT Pn103 = 00000 Pn100 = 0040.0 Pn101 = 015.91 Pn102 = 0040.0	Press the DATA Key, and the advanced autotuning execution screen appears.

上正科技有限公司
購買、維修 此手冊零組件
電話：037-466333
Email: service@repairtw.com
Line id: @zzzz
www.repairtw.com

Operation Key	Display	Description
JOG SVON	RUN ADVANCED AT Pn103 = 00000 Pn100 = 0040.0 Pn101 = 015.91 Pn102 = 0040.0	Press the JOG SVON Key to turn the servo ON. The indication BB changes to RUN.
JOG SVON ∧ ∨	RUN ADVANCED AT Pn103 = 12300 Pn100 = 0040.0 Pn101 = 015.91 Pn102 = 0040.0 Example: When the calculation of moment of inertia is executed.	Press the ∧ Key (forward run start) for one second or more when a positive (+) value is set in STROKE in the initial setting display, or press the ∨ Key (reserve run start) for one second or more when a negative (-) value is set, and the calculation of the moment of inertia starts. If you press the incorrect key for the set travel direction (+ or -), the calculation will not start. While the moment of inertia is being calculated, □□□ of Pn103 is highlighted. When the calculation is completed, □□□ is no longer highlighted and the calculated load moment of inertia is displayed. The servo remains ON, but the auto run operation enters in HOLD status. *When the moment of inertia is not being calculated, the current value for Pn103 is displayed but not highlighted. *To cancel the auto run operation, press the JOG SVON Key and the servo motor stops. Then, the main menu of the utility function mode appears. *If the tuning operation or the calculation of the moment of inertia is disabled, NO-OP is displayed and highlighted, and then the main menu of the utility function mode appears. Take corrective action to enable the operation. *If the calculation of the moment of inertia could not be completed normally because the required conditions are not fulfilled, Pn103 = ERROR is highlighted and displayed. Press the MODE/SET Key to cancel the function, modify the settings, and then restart.
∧ ∨	Adj ADVANCED AT Pn103 = 00123 Pn100 = 0063.0 Pn101 = 017.00 Pn102 = 0063.0	Press the ∧ or ∨ Key according to the sign (+ or -) of the value set for STROKE in the initial setting display, and the calculated value of the moment of inertia is written in the SERVOPACK and the auto run operation restarts. While the servomotor is running, the notch filter, the torque reference filter, and various gains are automatically set. "Adj" is displayed and highlighted during the auto setting.
DATA	Done ADVANCED AT Pn103 = 00123 Pn100 = 0063.0 Pn101 = 017.00 Pn102 = 0063.0	If the advanced autotuning has completed normally, press the DATA Key. The calculated values for the servo gains and filter time constants are written in the SERVOPACK and "Done" is displayed and highlighted for two seconds. *If you do not want to save the calculated values for the servo gains and filter time constants in the SERVOPACK, Press the MODE/SET Key.

上正科技自修公司
購買、維修 伺服電機/馬達
電話： 03-4600307
Email: service@repairtw.com
Line id: @zzzz
www.repairtw.com

Operation Key	Display	Description
MODE/SET	BB -FUNCTION- Pn016 Pn017 Pn018 Pn019	Press the MODE/SET Key. The main menu of the utility function mode reappears.

INFO

If the advanced autotuning could not be successfully completed, “Error” is displayed and blinks. To cancel the function, press the MODE/SET Key. Then restart from the first step of the procedure and display the initial settings display for the advanced autotuning initial setting display.
Then, change the gain setting level “LEVEL,” for example from “0 (Loose)” to “1 (Normal),” or increase the set value for Pn522 (positioning completion width), and re-execute the advanced autotuning.

Example of the screen when advanced autotuning could not be completed

```
Error     ADVANCED AT
Pn103 = 00123
Pn100 = 0063.0
Pn101 = 017.00
Pn102 = 0063.0
```

上正科技有限公司
購買、維修 此手冊零組件
電話： 037-466333
Email: service@repairtw.com
Line id: @zzzz
www.repairtw.com

8.4 One-parameter Autotuning

8.4.1 One-parameter Autotuning

One-parameter autotuning enables the four servo gains (Kv, Ti, Kp, Tf) to be set to regulatory stable conditions merely by manipulating one autotuning level. One-parameter autotuning is executed using utility function Fn01A (One-parameter Tuning).

The autotuning level is increased and decreased between 1 and 2,000 during operation to simultaneously change the Speed Loop Gain (Pn100: Kv), Speed Loop Integral Time Constant (Pn101: Ti), Position Loop Gain (Pn102: Kp), and 1st Step 1st Torque Reference Filter Time Constant (Pn401: Tf). These gains are changed to satisfy relationships determined by the autotuning mode. Vibration may occur during one-parameter autotuning, so set vibration detection in Pn310 to an alarm (n.□□□2) or warning (n.□□□1).

8.4.2 One-parameter Autotuning Procedure

The following procedure is used for one-parameter autotuning.

Operation Key	Display	Description
MODE/SET ∧ ∨	RUN -FUNCTION- Fn019 Fn01A Fn01B Fn01C	Display the main menu of the utility function mode, and select Fn01A.
DATA	RUN -OnePrmTun- Setting Tuning Mode = 0	Press the DATA Key. The Fn01A setting basic (OnePrmTun) screen appears. *If the screen does not change and NO-OP is displayed as the status, the write prohibited password is set in Fn010. Check the status and cancel the password.
∧ ∨	RUN -OnePrmTun- Setting Tuning Mode = 1	To select the tuning mode, press the ∧ or ∨ Key.
Tuning Mode (Tuning settings selection) 0: To set the servo gains for stability by changing Kp, Kv, Ti, and Tf 1: To set the servo gains for high responsiveness by changing Kp, Kv, Ti, and Tf		
DATA	RUN -OnePrmTun- Pn100 = 0040.0 Pn101 = 020.00 Pn102 = 0040.0 Pn401 = 001.00	Press the DATA Key, and the values of each gain before tuning are displayed.
DATA	RUN -OnePrmTun- Level = 0040	Press the DATA Key. The tuning level change screen appears. Level (tuning level) setting range: 1 Hz to 2000 Hz

上正科技有限公司
購買、維修、出售、手冊零組件
電話： 037-466333
Email: service@repairtw.com
Line id: @zzzz
www.repairtw.com

Operation Key	Display	Description
∧ ∨ < >	RUN -OnePrmTun- Level = 0041	If you change the value of the Level by pressing the ∧ or ∨ Key, the values for the other servo gains will change. To move the cursor between the lower two digits, press the < or > Key.
DATA	RUN -OnePrmTun- Pn100 = 0041.0 Pn101 = 019.51 Pn102 = 0041.0 Pn401 = 000.97	Press the DATA Key. The adjusted values of the servo gains are displayed.
DATA	Done -OnePrmTun- Pn100 = 0041.0 Pn101 = 019.51 Pn102 = 0041.0 Pn401 = 000.97	Press the DATA Key. Done is displayed for one second, and the servo gains adjusted by tuning are overwritten in the corresponding parameters and saved. *To return to the previous screen without having saved the adjusted servo gains, press the < Key.
MODE/SET	RUN -OnePrmTun- Fn019 Fn01A Fn01B Fn01C	Press the MODE/SET Key. The main menu of the utility function mode reappears.

上正科技有限公司
購買、維修 此手冊零組件
電話： 037-466333
Email: service@repairtw.com
Line id: @zzzz
www.repairtw.com

This completes One-parameter Autotuning.

8.5 Manual Tuning

8.5.1 Explanation of Servo Gain

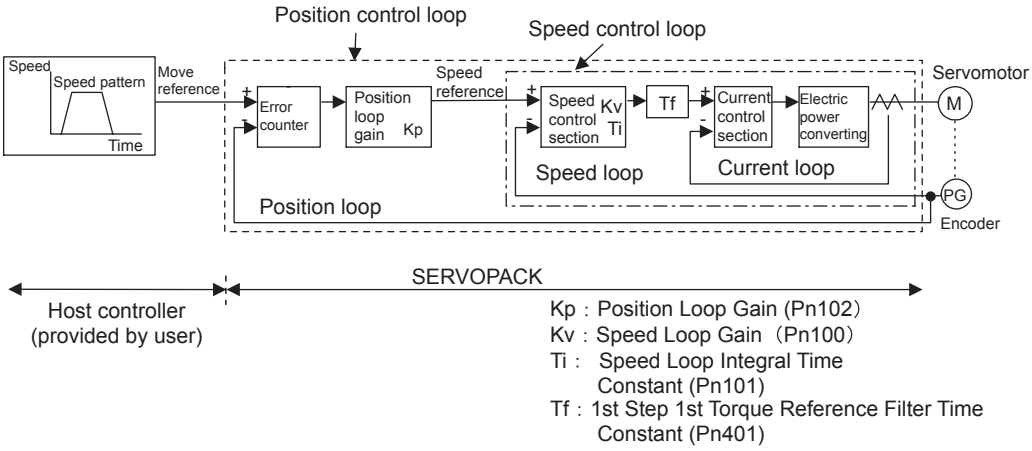

To adjust the servo gain manually, understand the configuration and characteristics of the SERVOPACK and adjust the servo gain parameters one by one. If one parameter is changed, it is almost always necessary to adjust the other parameters. It will also be necessary to make preparations such as setting up a measuring instrument to monitor the output waveform from the SERVOPACK.

The SERVOPACK has three feedback loops (i.e., position loop, speed loop, and current loop). The innermost loop must have the highest response and the middle loop must have higher response than the outermost. If this principle is not followed, it will result in vibration or responsiveness decreases.

The SERVOPACK is designed to ensure that the current loop has good response performance. The user need to adjust only position loop gain and speed loop gain.

上昇科技有限公司
購買、維修 此手冊零組件
電話: 037-466333
Email: service@repairtw.com
Line Id: @zzzz
www.repairtw.com

8.5.2 Servo Gain Manual Tuning

The SERVOPACK has the following parameters for the servo gains. Setting the servo gains in the parameters can adjust the servo responsiveness.

- Pn100: Speed loop gain (Kv)
- Pn101: Speed loop integral time constant (Ti)
- Pn102: Position loop gain (Kp)
- Pn401: 1st Step 1st torque reference filter time constant (Tf)

For the position and speed control, the adjustment in the following procedure can increase the responsiveness. The positioning time in position control can be reduced.

Perform the manual tuning in the following cases.

- If the advanced autotuning and one-parameter tuning did not give a satisfactory result.
- To increase the servo gains more than the values set by the advanced autotuning and the one-parameter autotuning.
- To determine the servo gains and moment of inertia ratio by the user.

Start the manual tuning from the factory setting or the values set by the advanced autotuning and the one-parameter autotuning. Prepare measuring instruments such as memory recorder so that the signals can be observed from the analog monitor (CN5) such as “Torque Reference” and “Motor Speed,” and “Position Error Monitor” for the position control. (Refer to *8.7 Analog Monitor*.)

Vibration may occur during servo gain adjustments. Validate the vibration alarm, Pn310=n. □□□2 to detect vibration. Vibration alarm can not detect all vibration. When vibration alarm occurred, an emergency stop device is needed to stop the machine. Customers have to provide the emergency stop device, and use this device when vibration occurred.

- Servo Gain Manual Tuning

Step	Explanation
1	Increase the speed loop gain (Pn100) to within the range so that the machine does not vibrate. At the same time, decrease the speed loop integral time constant (Pn101).
2	Adjust the 1st Step 1st torque reference filter time constant (Pn401) so that no vibration occurs.
3	Repeat the steps 1 and 2. Then reduce the value for 10 to 20%.
4	For the position control, increase the position loop gain (Pn102) to within the range so that the machine does not vibrate.

8.5.3 Position Loop Gain

Pn102	Position Loop Gain (Kp)			Position
	Setting Range	Setting Unit	Factory Setting	Setting Validation
	1.0 to 2,000.0/s	0.1/s	40.0/s	Immediately

The responsiveness of the position loop in the SERVOPACK is determined by the position loop gain. The responsiveness increases and the positioning time decreases when the position loop gain is set to a higher value. In general, the position loop gain cannot be set higher than natural vibrating frequency of the mechanical system, so the mechanical system must be made more rigid to increase its natural vibrating frequency and allow the position loop gain to be set to a high value.

上正科技有限公司
購買、維修 IT主機零組件
電話： 037-466333
Email: service@repairtw.com
Line Id: @2222
www.repairtw.com

INFO

If the position loop gain (Pn102) can not be set high in the mechanical system, an overflow alarm may occur during high speed operation. In this case, increase the values in the following parameter to suppress detection of the overflow alarm.

Pn520	Excessive Position Error Alarm Level			Position
	Setting Range	Setting Unit	Factory Setting	Setting Validation
	1 to 1,073,741,823 (2^{30}-1) reference units	Reference units	262,144 reference unit	Immediately

This parameter's new setting must satisfy the following condition.

$$Pn520 \geq \frac{\text{Max. feed speed (reference units/s)}}{Pn102} \times 2.0$$

8.5.4 Speed Loop Gain

Pn100	Speed Loop Gain (Kv)		Speed	Position
	Setting Range	Setting Unit	Factory Setting	Setting Validation
	1.0 to 2,000.0 Hz	0.1 Hz	40.0 Hz	Immediately

This parameter determines the responsiveness of the speed loop. The responsiveness increases and the positioning time decreases when the position loop gain is set to a higher value. If the speed loop's responsiveness is too low, it will delay the outer position loop and cause overshooting and vibration of the speed reference. The SERVOPACK will be most stable and responsive when the speed loop gain is set as high as possible within the range that does not cause vibration in the mechanical system. The value of speed loop gain is the same as the set value of Pn100 if Pn103 (The moment of inertia ratio) has been set correctly.

Pn103	Moment of Inertia Ratio		Speed	Position	Torque
	Setting Range	Setting Unit	Factory Setting	Setting Validation	
	0% to 20,000%	1%	0%	Immediately	

$$\text{Pn103 set value} = \frac{\text{Motor axis conversion load moment of inertia } (J_L)\times 100(\%)}{\text{Servomotor rotor moment of inertia } (J_M)}$$

The factory setting is Pn103=0. Before adjusting the servo, determine the moment of inertia ratio with the equation above and set parameter Pn103.

上正科技有限公司
購買 維修 此手冊零組件
電話： 037-466333
Email: service@repairtw.com
Line Id: @222
www.repairtw.com

8.5.5 Speed Loop Integral Time Constant

Pn101	Speed Loop Integral Time Constant (Ti)		Speed	Position
	Setting Range	Setting Unit	Factory Setting	Setting Validation
	0.15 to 512.00 ms	0.01 ms	20.00 ms	Immediately

The speed loop has an integral element so that the speed loop can respond to minute inputs. This integral element causes a delay in the SERVOPACK. If the time constant is set too long, overshooting will occur, which results in a longer positioning settling times or response decreases.
The estimated set value for Pn101 depends on the speed loop control method with Pn10B.1, as shown below.

(1) PI Control (Pn10B.1=0)

$$\text{Pn101 set value} = \frac{4000}{2\pi \times \text{Pn100 set value}}$$

Example: Pn100 = 40.0 (Hz);

$$\text{Pn101=15.92 (ms)} = \frac{4000}{2\pi \times 40.0\ (\text{Hz})}$$

(2) IP Control (Pn10B.1=1)

$$\text{Pn101 set value} = \frac{2000}{2\pi \times \text{Pn100 set value}}$$

Example: Pn100 = 40.0 (Hz);

$$\text{Pn101=7.96 (ms)} = \frac{2000}{2\pi \times 40.0\ (\text{Hz})}$$

In cases where the load moment of inertia is large and there are vibration elements in the mechanical system, vibrations may occur in the equipment unless Pn101 is set to a value somewhat higher than the estimated set value derived from the equation above.

INFO

■ Selecting the Speed Loop Control Method (PI Control or I-P Control)

Generally, I-P control is more effective in high-speed positioning or high-speed/precision manufacturing applications. The position loop gain is lower than it would be in PI control, so shorter positioning times and smaller arc radii can be achieved. On the other hand, PI control is generally used when switching to P control fairly often with a mode switch or other method.

8.6 Servo Gain Adjustment Functions

8.6.1 Feed Forward Reference

Pn109	Feed Forward			Position
	Setting Range	Setting Unit	Factory Setting	Setting Validation
	0% to 100%	1%	0%	Immediately
Pn10A	Feed Forward Filter Time Constant			Position
	Setting Range	Setting Unit	Factory Setting	Setting Validation
	0.00 to 64.00 ms	0.01ms	0.00ms	Immediately

Applies feed-forward control[1] compensation in position control inside the SERVOPACK. Use this parameter to shorten positioning time. Too high value may cause the machine to vibrate. For ordinary machines, set 80% or less in this parameter.

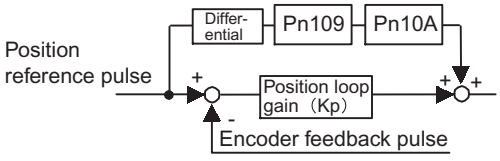

上正科技有限公司
購買、維修 此手冊零組件
電話： 037-466333
Email: service@repairtw.com
Line id: @zzzz
www.repairtw.com

TERMS

[1]Feed-forward Control

Feed-forward control is a control method that makes necessary control corrections in advance before the control system is affected by an external disturbance. Feed-forward control can increase the effective servo gain and improve the responsiveness of the system.

8.6.2 Using the Mode Switch (P/PI Switching)

Use the mode switch (P/PI switching) function in the following cases:

- To suppress overshooting during acceleration or deceleration (for speed control)
- To suppress undershooting during positioning and reduce the settling time (for position control)

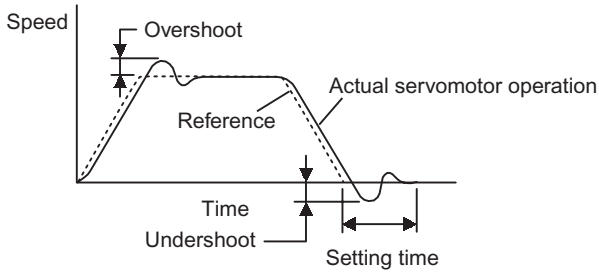

The mode switch function automatically switches the speed control mode from PI control mode to P control[1] mode based on a comparison between the servo's internal value and a user-set detection level.

IMPORTANT

1. The mode switch function is used in very high-speed positioning when it is necessary to use the servodrive near the limits of its capabilities. The speed response waveform must be observed to adjust the mode switch.
2. For normal use, the speed loop gain and position loop gain set by autotuning provide sufficient speed/position control. Even if overshooting or undershooting occur, they can be suppressed by setting the host controller's acceleration/deceleration time constant, the SERVOPACK's Soft Start Time Constants (Pn305, Pn306), or Position Reference Acceleration/Deceleration Time Constant (Pn216).

上正科技有限公司
購買、維修、出售所需組件
電話：037-466333
Email: service@repairtw.com
Line Id: @zzzz
www.repairtw.com

(1) Selecting the Mode Switch Setting

The SERVOPACK provides the following four mode switch settings (0 to 3). Select the appropriate mode switch setting with parameter Pn10B.0.

Parameter		Mode Switch Selection	Parameter Containing Detection Point Setting	Setting Units
Pn10B	n.□□□**0**	Use a torque reference level for detection point. (Factory setting)	Pn10C	Percentage of rated torque: %
	n.□□□**1**	Use a speed reference level for detection point.	Pn10D	Motor speed: RPM
	n.□□□**2**	Use an acceleration level for detection point.	Pn10E	Motor acceleration: 10 (RPM)/s
	n.□□□**3**	Use an error pulse level for detection point.	Pn10F	Reference unit
	n.□□□**4**	Do not use mode switch function.	–	–
Selects a condition in which to execute mode switching (P/PI switching). The setting is validated immediately.				

TERMS

[1] From PI control to P control

PI control means proportional/integral control and P control means proportional control. In short, switching "from PI control to P control" reduces effective servo gain, making the SERVOPACK more stable.

Using the Torque Reference Level to Switch Modes (Factory Setting)

With this setting, the speed loop is switched to P control when the value of torque reference input exceeds the torque set in parameter Pn10C. The factory default setting for the torque reference detection point is 200% of the rated torque (Pn10C = 200).

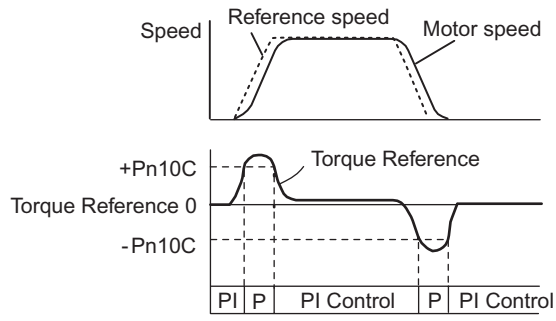

■ Operating Example

If the mode switch function is not being used and the SERVOPACK is always operated with PI control, the speed of the motor may overshoot or undershoot due to torque saturation during acceleration or deceleration. The mode switch function suppresses torque saturation and eliminates the overshooting or undershooting of the motor speed.

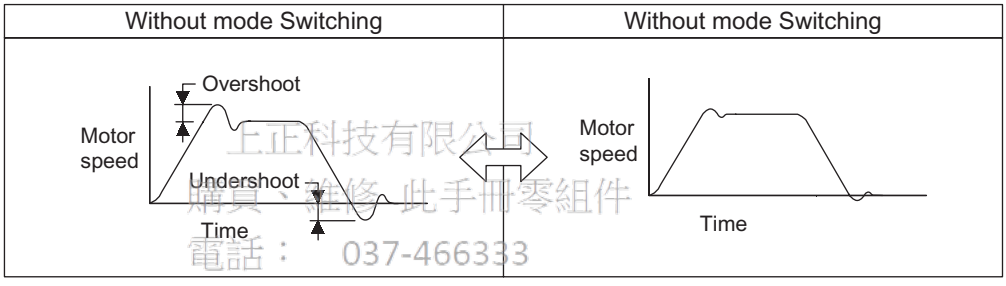

上正科技有限公司
購買、維修 此手冊零組件
電話： 037-466333
Email: service@repairtw.com
Line Id: @5zzz
www.repairtw.com

Using the Speed Reference Level to Switch Modes

With this setting, the speed loop is switched to P control when the value of speed reference input exceeds the speed set in parameter Pn10D.

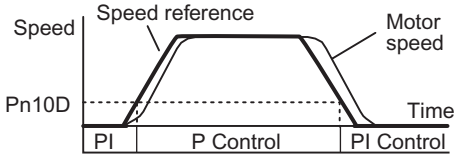

■ Operating Example

In this example, the mode switch is used to reduce the settling time. It is necessary to increase the speed loop gain to reduce the settling time. Using the mode switch suppresses overshooting and undershooting when speed loop gain is increased.

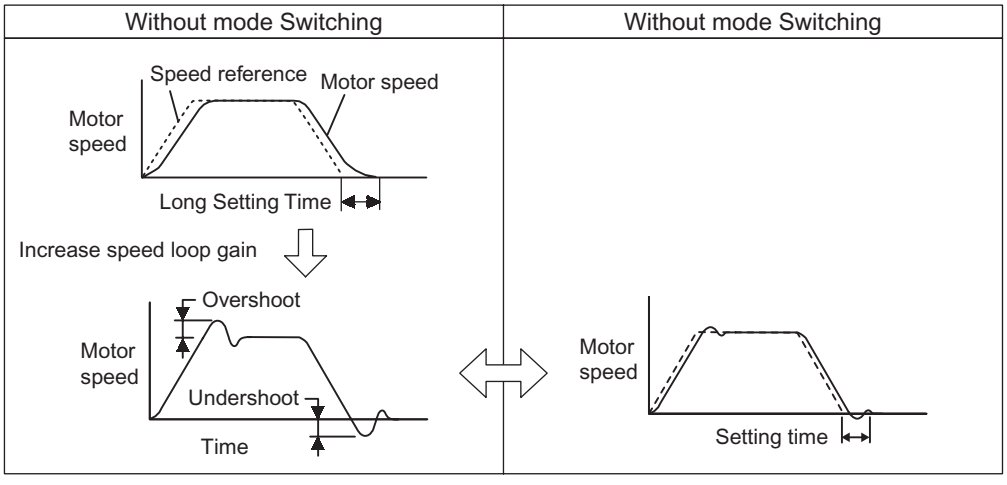

Using the Acceleration Level to Switch Modes

With this setting, the speed loop is switched to P control when the motor's acceleration rate exceeds the acceleration rate set in parameter Pn10E.

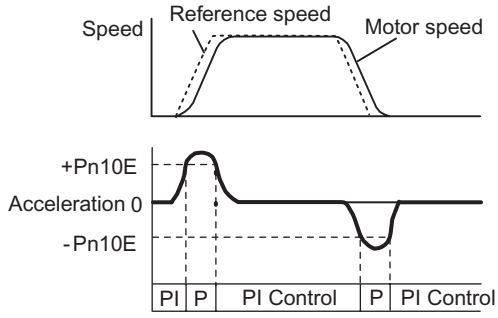

■ Operating Example

If the mode switch function is not being used and the SERVOPACK is always operated with PI control, the speed of the motor may overshoot or undershoot due to torque saturation during acceleration or deceleration. The mode switch function suppresses torque saturation and eliminates the overshooting or undershooting of the motor speed.

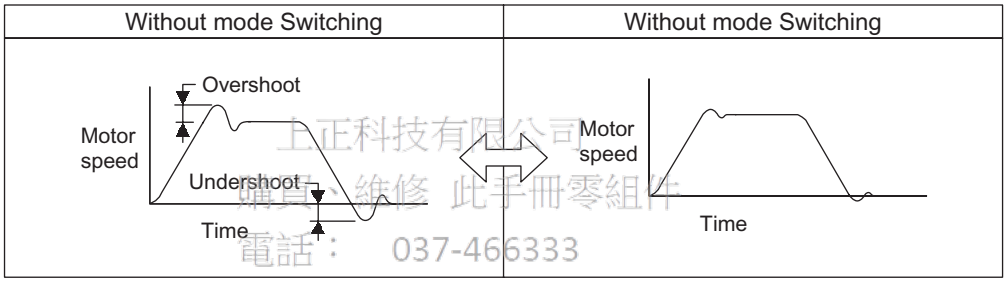

上正科技有限公司
購買、維修 此手冊零組件
電話： 037-466333
Email: service@repairtw.com
Line ID: @2222
www.repairtw.com

Using the Error Pulse Level to Switch Modes

This setting is effective with position control only.

With this setting, the speed loop is switched to P control when the position error pulse exceeds the value set in parameter Pn10F.

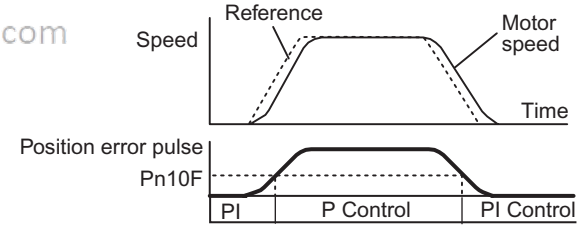

■ Operating Example

In this example, the mode switch is used to reduce the settling time. It is necessary to increase the speed loop gain to reduce the settling time. Using the mode switch suppresses overshooting and undershooting when speed loop gain is increased.

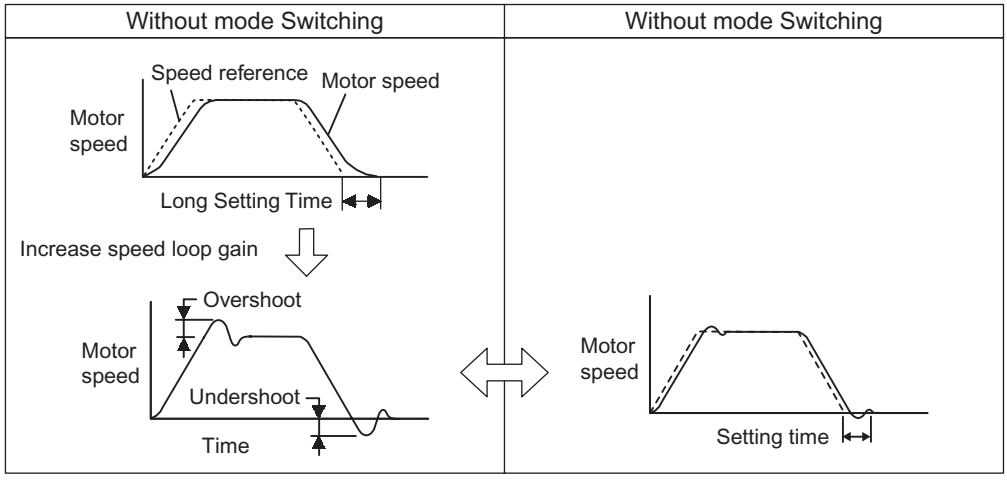

上正科技有限公司
購買、維修 此手冊零組件
電話： 037-466333
Email: service@repairtw.com
Line id: @zzzz
www.repairtw.com

8.6.3 Setting the Speed Bias

The settling time for positioning can be reduced by setting the following parameters to add bias in the speed reference block in the SERVOPACK.

Pn107	Bias			Position
	Setting Range	Setting Unit	Factory Setting	Setting Validation
	0 to 450 RPM	1 RPM	0 RPM	Immediately
Pn108	Bias Addition Width			Position
	Setting Range	Setting Unit	Factory Setting	Setting Validation
	0 to 250 units	1 Reference units	7 units	Immediately

To reduce the positioning time, set these parameters based on the machine's characteristics.
The Bias Addition Width (Pn108) specifies when the Bias (Pn107) is added and the width is expressed in position error pulse units. The bias input will be added when the position error pulse value exceeds the width set in Pn108.

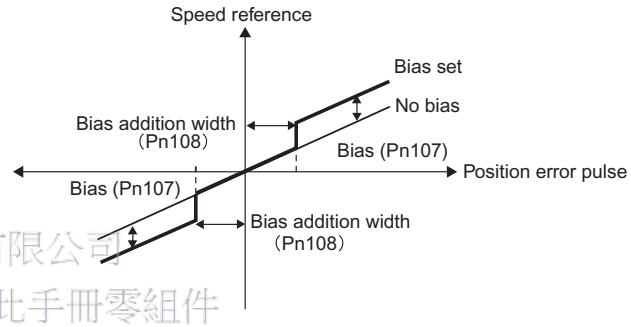

上正科技有限公司
購買、維修 此手冊零組件
電話： 037-466333
Email: service@repairtw.com
Line id: @777
www.repairtw.com

8.6.4 Speed Feedback Filter Time Constant

Pn308	Speed Feedback Filter Time Constant		Speed	Position
	Setting Range	Setting Unit	Factory Setting	Setting Validation
	0.00 to 655.35 ms	0.01ms	0.00ms	Immediately
Sets the 1st-order filter for the speed loop's speed feedback. Makes the motor speed smoother and reduces vibration. If the set value is too high, it will introduce a delay in the loop and cause poor responsiveness.				

8.6.5 Speed Feedback Compensation

The speed feedback compensation can be used to reduce vibration and allow a higher speed loop gain to be set. In the end, the speed feedback compensation allows the positioning settling time to be reduced because the position loop gain can also be increased if the speed loop gain can be increased.

Pn110	Online Autotuning Method		Speed	Position
	Setting Range	Setting Unit	Factory Setting	Setting Validation
	–	–	0012	After restart

Pn111	Speed Feedback Compensation		Speed	Position
	Setting Range	Setting Unit	Factory Setting	Setting Validation
	1% to 500%	1%	100%	Immediately

Parameter		Function
Pn110	n.□□**0**□	Speed feedback compensation is used.
	n.□□**1**□	Speed feedback compensation is not used. (Standard speed feedback)

IMPORTANT

When this function is used, it is assumed that the moment of inertia ratio set in Pn103 is correct. Verify that the moment of inertia ratio has been set correctly.

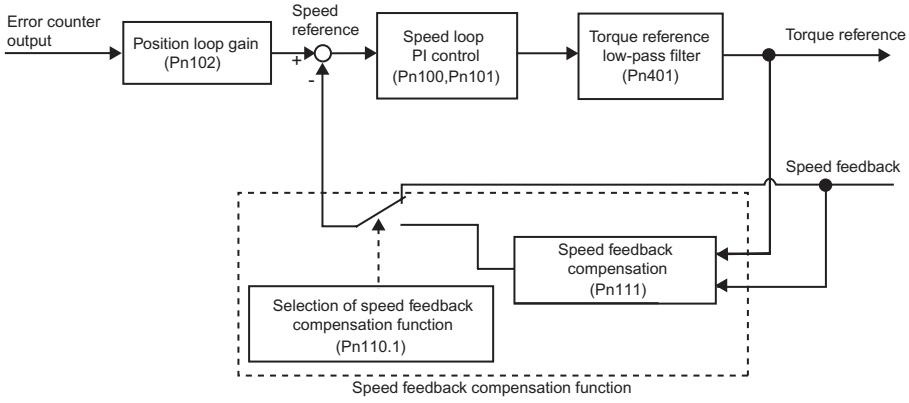

(1) Adjustment Procedure

The following procedure explains how to adjust when the speed loop gain cannot be increased due to vibrations in the mechanical system. When adding a speed feedback compensation, observe the position error and torque reference with the analog monitor (Refer to *8.7 Analog Monitor*) while adjusting the servo gain.

上揚科技有限公司
購買、維修、出租工業電子零組件
電話： 037-466333
Email: service@repairtw.com
Line id: @zzzz
www.repairtw.com

1. Set parameter Pn110 to “0002” so that speed feedback compensation will be enabled and the normal autotuning function will be disabled.
2. Make normal servo gain adjustments with no feedback compensation. With PI control, gradually increase the Speed Loop Gain in Pn100 and reduce the Speed Loop Integral Time Constant Pn101, setting the Position Loop Gain in Pn102 to the same value as that of the Speed Loop Gain in Pn100.

   Use the result from the following equation as a initial estimate when setting the Speed Loop Integral Time Constant in Pn101.

   $$\text{Speed loop integral time constant (Pn101)} = \frac{4000}{2\pi \times \text{Pn100}}$$

   Speed loop gain units: 0.1 Hz

   Check the units when setting the Speed Loop Integral Time Constant in Pn101. The value in Pn101 is set in units of 0.01 ms.

   Set the same value for the speed loop gain and position loop gain even though the speed loop gain units (0.1 Hz) are different form the position loop gain units (0.1/s).
3. Repeat step 2 to increase the speed loop gain while monitoring the settling time with the analog monitor’s position error and checking whether vibration occurs in the torque reference. If there is any vibrating noise or noticeable vibration, gradually increase the Torque Reference Filter Time Constant in Pn401.
4. Gradually increase only the position loop gain. When it has been increased about as far as possible, then decrease the Speed Feedback Compensation in Pn111 from 100% to 90%. Then repeat steps 2 and 3.
5. Decrease the speed feedback compensation to a value lower than 90%. Then repeat steps 2 through 4 to shorten the settling time. If the speed feedback compensation is too low, however, the response waveform will oscillate.
6. Find the parameter settings that yield the shortest settling time without causing vibration or instability in the position error or torque reference waveform being observed with the analog monitor.
7. The servo gain adjustment procedure is complete when the positioning time cannot be reduced any more.

IMPORTANT

The speed feedback compensation usually makes it possible to increase the speed loop gain and position loop gain. Once the speed loop gain and position loop gain have been increased, the machinery may vibrate significantly and may even be damaged if the compensation value is changed significantly or Pn110.1 is set to “1” (i.e., speed feedback compensation disabled).

8.6.6 Switching Gain Settings

Two gain switching functions are available : manual gain switching that uses external input signals and automatic gain switching that automatically switches the gain settings.
The manual gain switching function uses the settings of the external input G-SEL signal of the OPTION field to switch between gain settings 1 through 4. The following table lists the switchable gain and related parameter.

(1) Manual Gain Switching Setting

Parameter Setting	Switching Setting	Setting
	G-SEL	
Pn139 = n.□□□0 Manual Gain Switching	00	Gain Setting 1
	01	Gain Setting 2
	10	Gain Setting 3
	11	Gain Setting 4

上正科技有限公司
購買、維修、此手冊零組件
電話：03-4756333
Email: service@repair.tw.com
Line id: @zzzz
www.repair.tw.com

(2) Switchable Gain Combinations

Setting	Speed Loop Gain	Speed Loop Integral Time Constant	Position Loop Gain	Torque Reference Filter
Gain Settings 1	Pn100 Speed Loop Gain	Pn101 Speed Loop Integral Time Constant	Pn102 Position Loop Gain	Pn401 Torque Reference Filter Time Constant
Gain Settings 2	Pn104 Speed Loop Gain #2	Pn105 Speed Loop Integral Time Constant #2	Pn106 Position Loop Gain #2	Pn412 1st Step Torque Reference Filter Time Constant #2
Gain Settings 3	Pn12B Speed Loop Gain #3	Pn12C Speed Loop Integral Time Constant #3	Pn12D Position Loop Gain #3	Pn413 1st Step Torque Reference Filter Time Constant #3
Gain Settings 4	Pn12E Speed Loop Gain #4	Pn12F Speed Loop Integral Time Constant #4	Pn130 Position Loop Gain #4	Pn414 1st Step Torque Reference Filter Time Constant #4

The Automatic Gain Switching switches the setting between the gain settings 1 and 2 shown in the above table when the SERVOPACK status satisfies the “Switching Setting” conditions set in the parameter Pn139: From the gain settings 1 to 2 when “Condition A” is established, and from the gain settings 2 to 1 when “Condition B” is established.

“Switching Delay” stays unchanged if the switching condition is established. This function is effective when the switching conditions are not stable or a precised timing setting is required. To minimize shocks at gain switching, set “Switching Time” so that the gain can be changed smoothly in linear pattern. “Switching Delay” and “Switching Time” can be set respectively for the switching from the gain switching 1 to 2 and from 2 to 1 as shown in the table below.

(3) Automatic Gain Switching Pattern

Automatic switching pattern 1 (Pn139.0=1)

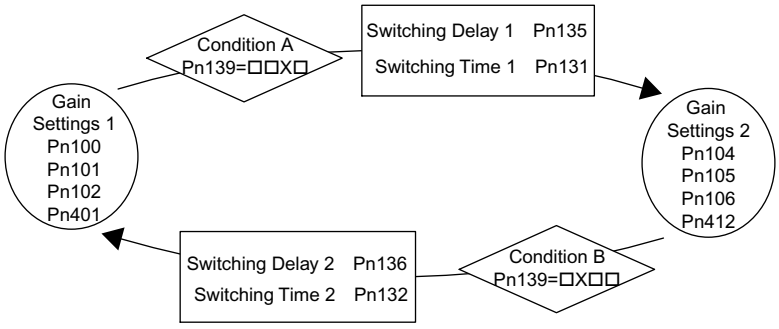

(4) Automatic Gain Switch Settings

Parameter Settings	Switching Conditions		Setting	Switching Delay	Switching Time
	/G-SEL2	/G-SEL1			
Pn139=□□□1 (Automatic Switching Pattern 1)	Condition A established. Pn139=□□X□		Gain Settings 1 to Gain Settings 2	Switching Delay 1 Pn135	Switching Time 1 Pn131
	Condition B established. Pn139=□X□□		Gain Settings 2 to Gain Settings 1	Switching Delay2 Pn136	Switching Time 2 Pn132

大中科技有限公司
購買、維修 此手冊零組件
電話： 037-466333
Email: sales@epartwin
Line id: @zzzz
www.repairtw.com

(5) Switching Operation

The following diagram shows the relationship between the gain switching delay and the switching time.
In this example, the "positioning completed signal (/COIN) ON" condition is set as condition A for automatic gain switching pattern 1. The position loop gain is switched from the value in Pn102 (Position Loop Gain) to the value in Pn106 (Position Loop Gain #2). When the /COIN signal goes ON, the switching operation begins after the delay set in Pn135. The switching operation changes the position loop gain linearly from Pn102 to Pn106 over the switching time interval set in Pn131.

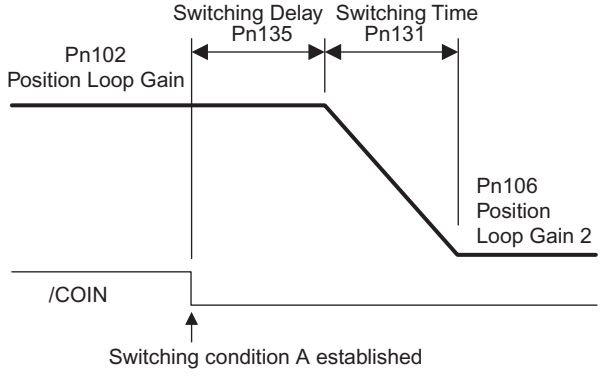

"Automatic Gain Switching" is available in not only standard PI and I-P control but also in Less Deviation Control. The following table shows the gain combinations for Less Deviation Control. The setting methods for the
" Switching Condition", "Switching Delay" and "Switching Time" are the same as for PI and I-P control. Refer to *8.6.8 Less Deviation Control* for information on how to adjust Less Deviation Control.

(6) Switchable Gain Combinations for Less Deviation Control

Setting	Servo Rigidity	Speed Feedback Filter Time Constant	Integral Compensation Processing Pn1A7=n.□□□X			
			0	1	2	3
Gain Settings 1	Pn1A0 Servo Rigidity	Pn1A2 Speed Feedback Filter Time Constant	No integral compensation	Use integral compensation.	Use integral compensation.	No integral compensation
Gain Settings 2	Pn1A1 Servo Rigidity #2	Pn1A3 Speed Feedback Filter Time Constant #2	No integral compensation	Use integral compensation.	No integral compensation	Use integral compensation.

IMPORTANT

Observe the following precautions when using the gain switching function.

- The gain switching function is compatible with the PI control and I-P control methods.
- The primary gain settings (Gain Settings 1) will be set if the automatic switching operation is interrupted by the servo OFF signal or an alarm. (If manual gain switching is interrupted, the gain settings specified by/G-SEL will be used.

(7) Related Parameters

Parameter		Function	
Pn139	n.□□□**0**	Manual gain switching	
	n.□□□**1**	Automatic switching pattern 1	
	n.□□**0**□	Switching condition A	Positioning completion signal (/COIN) ON
	n.□□**1**□		Positioning completion signal (/COIN) OFF
	n.□□**2**□		Positioning near signal (/NEAR) ON
	n.□□**3**□		Positioning near signal (/NEAR) OFF
	n.□□**4**□		No output for position reference filter and Reference pulse input OFF
	n.□□**5**□		Position reference pulse input ON
	n.□**0**□□ ⋮ n.□**5**□□	Switching condition B	Same as above.

大正科技有限公司
購買 維修 記手冊零組件
電話：037-466333
Email: [illegible]@[illegible].com
Line id: [illegible]@zzzz
www.[illegible]rw.com

Pn104	2nd Speed Loop Gain		Speed	Position
	Setting Range	Setting Unit	Factory Setting	Setting Validation
	1.0 to 2,000.0 Hz	0.1 Hz	40.0 Hz	Immediately
Pn105	2nd Speed Loop Integral Time Constant		Speed	Position
	Setting Range	Setting Unit	Factory Setting	Setting Validation
	0.15 to 512.00 ms	0.01 ms	20.00 ms	Immediately
Pn106	2nd Position Loop Gain		Speed	Position
	Setting Range	Setting Unit	Factory Setting	Setting Validation
	1.0 to 2,000.0/s	0.1/s	40.0/s	Immediately
Pn412	1st Step 2nd Torque Reference Filter Time Constant		Speed	Position Torque
	Setting Range	Setting Unit	Factory Setting	Setting Validation
	0.00 to 655.35 ms	0.01 ms	1.00 ms	Immediately

Pn12B	3rd Speed Loop Gain		Speed	Position
	Setting Range	Setting Unit	Factory Setting	Setting Validation
	1.0 to 2,000.0 Hz	0.1 Hz	40.0 Hz	Immediately
Pn12C	3rd Speed Loop Integral Time Constant		Speed	Position
	Setting Range	Setting Unit	Factory Setting	Setting Validation
	0.15 to 512.00 ms	0.01 ms	20.00 ms	Immediately
Pn12D	3rd Position Loop Gain		Speed	Position
	Setting Range	Setting Unit	Factory Setting	Setting Validation
	1.0 to 2,000.0/s	0.1/s	40.0/s	Immediately
Pn413	1st Step 3rd Torque Reference Filter Time Constant		Speed	Position Torque
	Setting Range	Setting Unit	Factory Setting	Setting Validation
	0.00 to 655.35 ms	0.01 ms	1.00 ms	Immediately
Pn12E	4th Speed Loop Gain		Speed	Position
	Setting Range	Setting Unit	Factory Setting	Setting Validation
	1.0 to 2,000.0 Hz	0.1 Hz	40.0 Hz	Immediately
Pn12F	4th Speed Loop Integral Time Constant		Speed	Position
	Setting Range	Setting Unit	Factory Setting	Setting Validation
	0.15 to 512.00 ms	0.01 ms	20.00 ms	Immediately
Pn130	4th Position Loop Gain		Speed	Position
	Setting Range	Setting Unit	Factory Setting	Setting Validation
	1.0 to 2,000.0/s	0.1/s	40.0/s	Immediately
Pn414	1st Step 4th Torque Reference Filter Time Constant		Speed	Position Torque
	Setting Range	Setting Unit	Factory Setting	Setting Validation
	0.00 to 655.35 ms	0.01 ms	1.00 ms	Immediately

上正科技有限公司
購買、維修、出售零組件
電話： 037-466333
Email: service@repairtw.com
Line Id: @2222
www.repairtw.com

(8) Automatic Gain Related Parameters

Pn131	Gain Switching Time 1		Speed	Position
	Setting Range	Setting Unit	Factory Setting	Setting Validation
	0 to 65,535 ms	1 ms	0 ms	Immediately
Pn132	Gain Switching Time 2		Speed	Position
	Setting Range	Setting Unit	Factory Setting	Setting Validation
	0 to 65,535 ms	1 ms	0 ms	Immediately
Pn135	Gain Switching Delay 1		Speed	Position
	Setting Range	Setting Unit	Factory Setting	Setting Validation
	0 to 65,535 ms	1 ms	0 ms	Immediately
Pn136	Gain Switching Delay 2		Speed	Position
	Setting Range	Setting Unit	Factory Setting	Setting Validation
	0 to 65,535 ms	1 ms	0 ms	Immediately

(9) Less Deviation Control Related Parameters

Pn1A0	Servo Rigidity		Speed	Position
	Setting Range	Setting Unit	Factory Setting	Setting Validation
	1% to 500%	1%	60%	Immediately
Pn1A1	Servo Rigidity 2		Speed	Position
	Setting Range	Setting Unit	Factory Setting	Setting Validation
	1% to 500%	1%	60%	Immediately
Pn1A2	Speed Feedback Filter Time Constant		Speed	Position
	Setting Range	Setting Unit	Factory Setting	Setting Validation
	0.30 to 32.00 ms	0.01 ms	0.72 ms	Immediately
Pn1A3	Speed Feedback Filter Time Constant #2		Speed	Position
	Setting Range	Setting Unit	Factory Setting	Setting Validation
	0.30 to 32.00 ms	0.01 ms	0.72 ms	Immediately
Pn1A7	Auxiliary Control Switches		Speed	Position
	Setting Range	Setting Unit	Factory Setting	Setting Validation
	–	–	1121	Immediately

上正科技有限公司
購買、維修 此手冊零組件
電話： 037-466333
Email: service@repairtw.com
Line id: @7373
www.repairtw.com

Parameter		Function
Pn1A7	n.□□□**0**	Do not perform integral compensation processing.
	n.□□□**1**	Perform integral compensation processing. (Factory setting)
	n.□□□**2**	Use gain switching without position error. Perform integral compensation on Gain Settings 1. Do not perform integral compensation on Gain Settings 2.
	n.□□□**3**	Use gain switching without position error. Do not perform integral compensation on Gain Settings 1. Perform integral compensation on Gain Settings 2.

8.6.7 Predictive Control

The Predictive Control function predicts the future error value using the future reference value and mechanical characteristics in the position control mode. There are two kinds Predictive Control in the SERVOPACK.

1. Predictive Control for Positioning
   This control method is used to reduce the settling time.
2. Predictive Control for Locus Tracking
   This control method is used to reduce the locus tracking error.

Predictive Control for Positioning operates by anticipating the future position reference in order to perform high-speed positioning. In contrast, Predictive Control for Locus Tracking follows the actual locus of the position reference being input.

The adjustment procedure is simple: just enable Predictive Control then the recommended values are calculated and set based on the position loop gain (Kp) that is set at that time. If necessary, the values can be fine-tuned with the parameters.

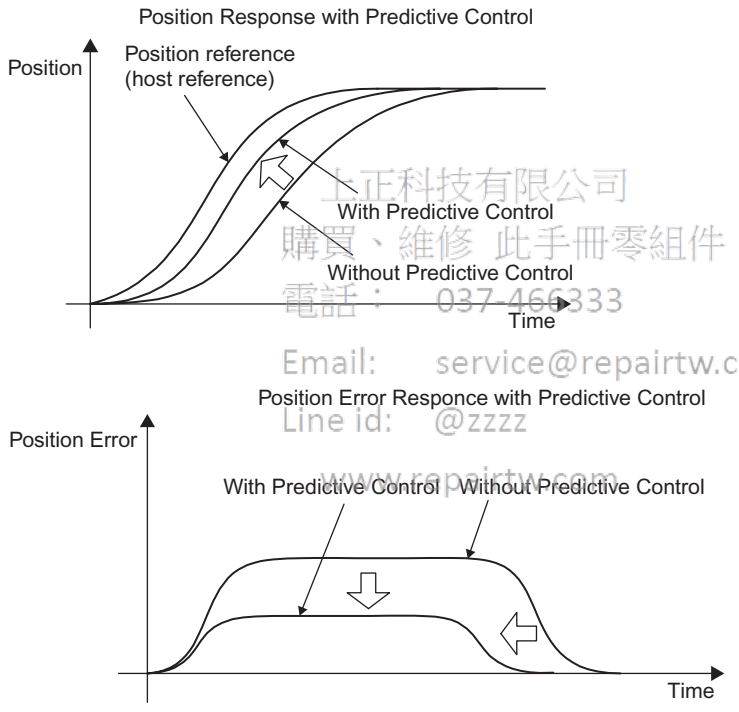

上正科技有限公司
購買、維修 此手冊零組件
電話： 037-466333
Email: service@repairtw.com
Line id: @zzzz
www.repairtw.com

(1) Related Parameters

Pn150	Predictive Control Selection Switches			Position
	Setting Range	Setting Unit	Factory Setting	Setting Validation
	---	---	0210	After restart

Parameter		Name	Function
Pn150	n.□□□0	Predictive Control Enable	Do not use the Predictive Control function.
	n.□□□1		Use the Predictive Control function.
	n.□□0□	Predictive Control Method	Performs Predictive Control for Locus Tracking. This method is used for Locus Tracking Control and for positioning for low-rigidity machines. Reduces the tracking error by keeping the locus shape of the position reference.
	n.□□1□		Performs Predictive Control for Positioning. This method is used for positioning control. It operates by anticipating the future position reference. For low-rigidity machines, use the Predictive Control for Locus Tracking if the vibration increases when stopping with this method.
	n.□X□□	Reserved. (Do not change.)	
	n.X□□□	Reserved. (Do not change.)	

上揚科技有限公司
購買、維修、出租零組件
電話： 887-486333
Email: service@repairtw.com
Line id: @zzzz
www.repairtw.com

Pn151	Predictive Control Acceleration/Deceleration Gain			Position
	Setting Range	Setting Unit	Factory Setting	Setting Validation
	0% to 300%	1%	100%	Immediately

Increasing the gain setting in Pn151 has the effect of shortening the settling time. The maximum position error is not changed significantly.
Overshooting will occur if the gain is set too high.
The following diagram shows the typical position error behavior when operating with a trapezoidal speed reference pattern. Increasing the Predictive Control Acceleration/Deceleration Gain changes the position error behavior from the dashed line to the solid line and shortens the settling time.

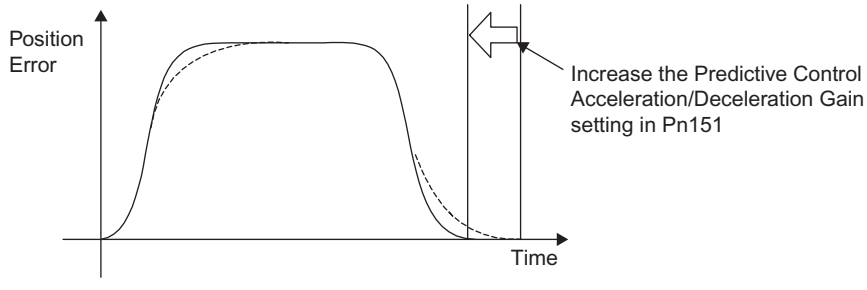

Pn152	Predictive Control Weighting Ratio			Position
	Setting Range	Setting Unit	Factory Setting	Setting Validation
	0% to 300%	1%	100%	Immediately

Increasing the weighting ratio in Pn152 has the effect of reducing the tracking error. When the positioning completion width is large, increasing the weighting ratio will also have the benefit of reducing the settling time.

If the weighting ratio is set too high, the torque may become oscillating and overshooting may occur.

The following diagram shows the typical position error behavior when operating with a trapezoidal speed reference pattern. Increasing the Predictive Control Weighting Ratio changes the position error behavior from the dashed line to the solid line and reduces the tracking error.

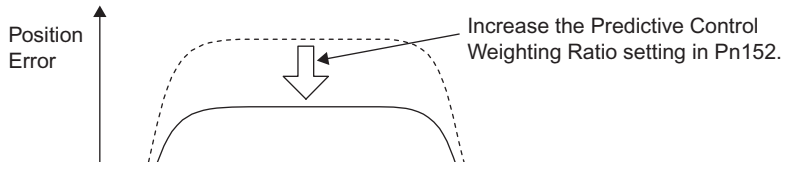

上正科技有限公司
購買、維修 此手冊零組件
電話： 037-466333
Email: service@repairtw.com
Line id: @zzzz
www.repairtw.com

(2) Predictive Control Method (Pn150=n.□□□X)

(a) Predictive Control for Locus Tracking (Pn150=n.□□□0)

The machine is controlled by following the locus of the position reference being input.

Use this control to keep the form of locus of position reference.

Note that the operation starts a few milliseconds after the command input. Therefore, the positioning time is longer than that by the predictive control for positioning.

(b) Predictive Control for Positioning (Pn150=n.□□□1)

The machine is controlled by anticipating the position reference to be input.

The operation starts at the same time as the command input, which reduces the positioning time.

The locus differs from that of position reference.

For machines that easily vibrate, greater vibration may be caused upon stopping. In such case, use the predictive control for locus tracking instead of the predictive control for positioning.

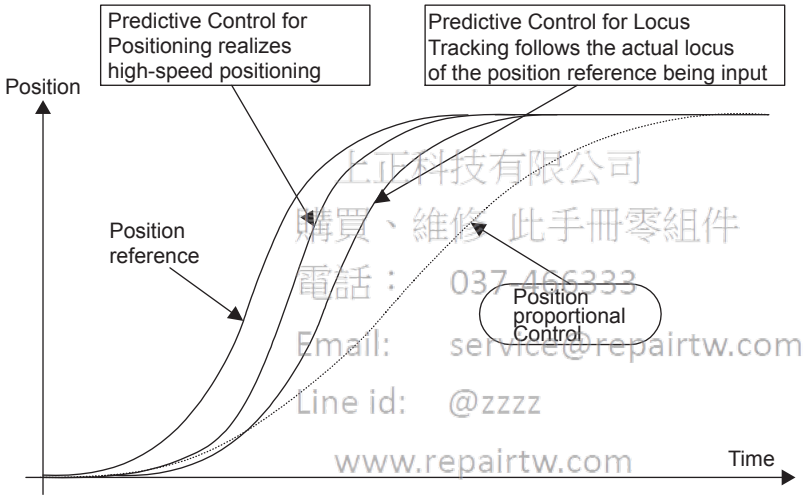

上正科技有限公司
購買、維修 此手冊零組件
電話： 037-466333
Email: service@repairtw.com
Line id: @zzzz
www.repairtw.com

(3) Adjustment Procedure

Use the procedure shown in the following flowchart to adjust the Predictive Control function.

1. **Adjustment by normal control**
   Use the functions such as autotunings and one-parameter autotuning.
2. **Predictive control selection switch setting**
   Set the predictive control selection switch to enable the predictive control. Turn OFF and ON the power to validate the setting.
3. **Adjustment of predictive control adjusting parameters**
   If necessary, adjust the predictive control related parameters, confirming the response.

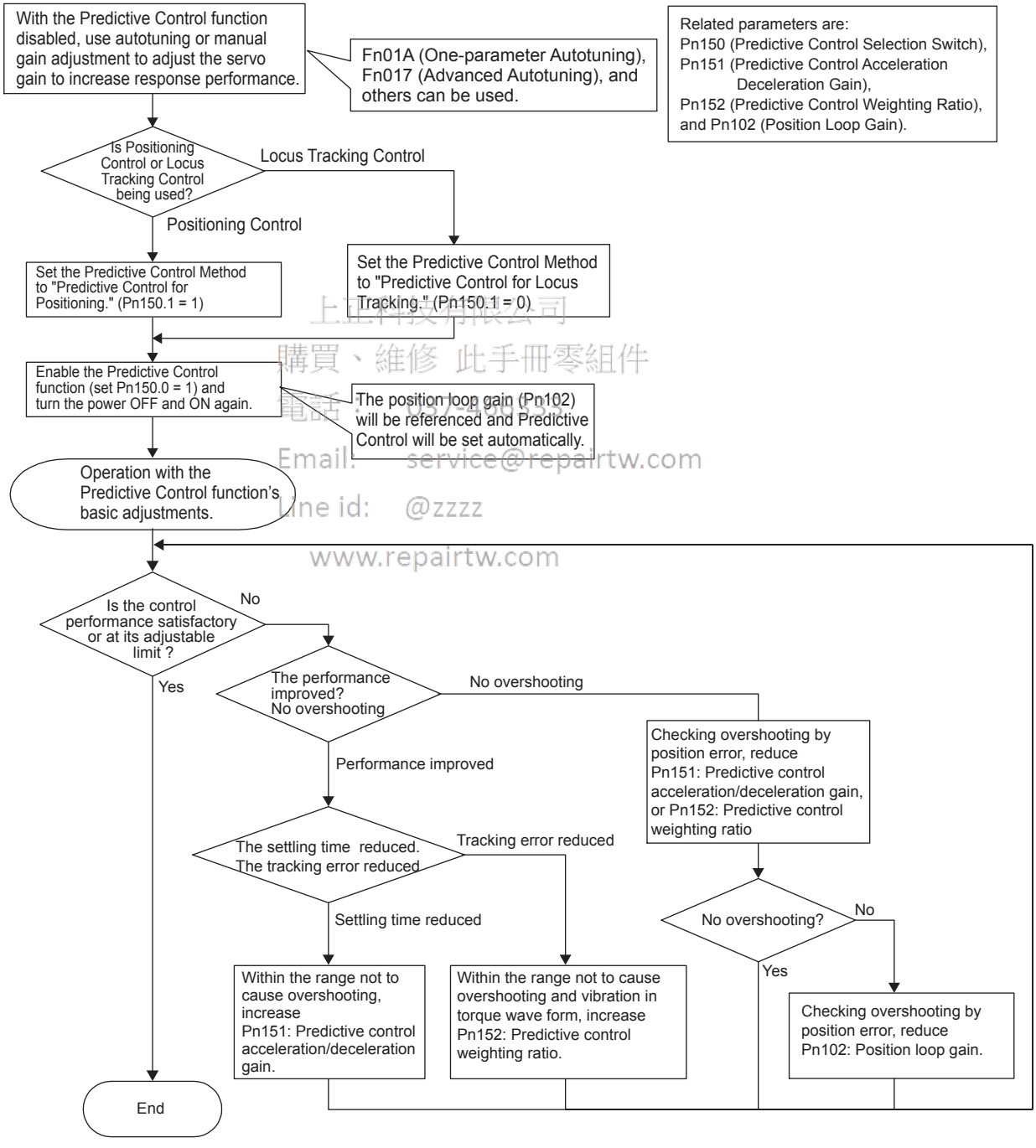

上正科技有限公司
購買、維修 此手冊零組件
電話: 886-4-2463-8333
Email: service@repairtw.com
Line id: @zzzz
www.repairtw.com

(4) Application Restriction

Advanced Autotuning (Fn017) is disabled while the Predictive Control function is being used (Pn150.0 = 1).

8.6.8 Less Deviation Control

Less Deviation Control can provide shorter settling times and lower locus tracking errors by reducing the position error as much as possible for the position control mode. There are two kinds of Less deviation control: Basic Less deviation and Less Deviation control with reference filter. Operation can be adjusted easily with utility function Fn015 (One-parameter Tuning for Less Deviation Control.) If higher performance operation is required, the settings can be fine-tuned with the parameters.

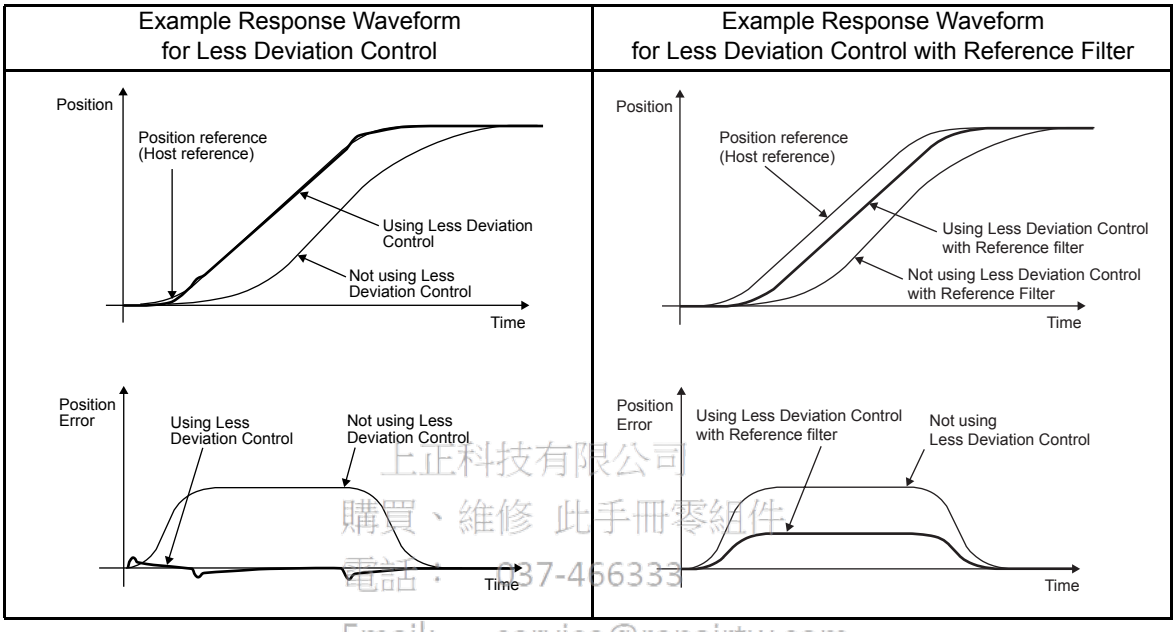

Example Response Waveforms for Less Deviation Control

上正科技有限公司
購買、維修 此手冊零組件
電話： 037-466333
Email: service@repairtw.com
Line id: @zzzz
www.repairtw.com

(1) Related Parameters

Pn119	Reference Filter Gain			Position
	Setting Range	Setting Unit	Factory Setting	Setting Validation
	1.0 to 2,000.0 /s	0.1 /s	50.0 /s	Immediately
Pn11A	Reference Filter Gain Compensation			Position
	Setting Range	Setting Unit	Factory Setting	Setting Validation
	50.0% to 200.0%	0.1%	100%	Immediately
Pn11E	Reference Filter Bias (Forward)			Position
	Setting Range	Setting Unit	Factory Setting	Setting Validation
	0.0% to 1,000.0%	0.1%	100%	Immediately
Pn144	Reference Filter Bias (Reverse)			Position
	Setting Range	Setting Unit	Factory Setting	Setting Validation
	0.0% to 1,000.0%	0.1%	100%	Immediately
Pn1A0	Servo Rigidity			Position
	Setting Range	Setting Unit	Factory Setting	Setting Validation
	1% to 500%	1%	60%	Immediately
Pn1A1	Servo Rigidity #2			Position
	Setting Range	Setting Unit	Factory Setting	Setting Validation
	1% to 500%	1%	60%	Immediately

Pn1A2	Speed Feedback Filter Time Constant			Position
	Setting Range	Setting Unit	Factory Setting	Setting Validation
	0.30 to 32.00 ms	0.01 ms	0.72 ms	Immediately
Pn1A3	Speed Feedback Filter Time Constant #2			Position
	Setting Range	Setting Unit	Factory Setting	Setting Validation
	0.30 to 32.00 ms	0.01 ms	0.72 ms	Immediately
Pn1A4	Torque Reference Filter Time Constant			Position
	Setting Range	Setting Unit	Factory Setting	Setting Validation
	0.00 to 25.00 ms	0.01 ms	0.36 ms	Immediately
Pn1A9	Auxiliary Integral Gain			Position
	Setting Range	Setting Unit	Factory Setting	Setting Validation
	0 to 500 Hz	1 Hz	37 Hz	Immediately
Pn1AA	Position Proportional Gain			Position
	Setting Range	Setting Unit	Factory Setting	Setting Validation
	0 to 500 Hz	1 Hz	60 Hz	Immediately
Pn1AB	Speed Integral Gain			Position
	Setting Range	Setting Unit	Factory Setting	Setting Validation
	0 to 500 Hz	1 Hz	0 Hz	Immediately
Pn1AC	Speed Proportional Gain			Position
	Setting Range	Setting Unit	Factory Setting	Setting Validation
	0 to 2,000 Hz	1 Hz	120 Hz	Immediately
Pn10B	Gain-related Application Switches			Position
	Setting Range	Setting Unit	Factory Setting	Setting Validation
	–	–	0000	After restart
Pn1A7	Auxiliary Control Switches			Position
	Setting Range	Setting Unit	Factory Setting	Setting Validation
	–	–	1121	Immediately

上正科技有限公司
備貨、維修 此手冊零組件
電話： 037-466333
Email: service@repairtw.com
Line Id: @2zzz
www.repairtw.com

Parameter		Meaning
Pn10B	n.□0□□	Standard position control
	n.□1□□	Use Less Deviation Control.
	n.□2□□	Use Less Deviation Control with Reference filter.
	n.□3□□	Reserved. (Do not change.)
Pn1A7	n.□□□0	Do not perform integral compensation processing.
	n.□□□1	Perform integral compensation processing.
	n.□□□2	Use gain switching in Less Deviation Control. Perform integral compensation on Gain Settings 1. Do not perform integral compensation on Gain Settings 2.
	n.□□□3	Use gain switching in Less Deviation Control. Do not perform integral compensation on Gain Settings 1. Perform integral compensation on Gain Settings 2.

(2) Adjustment Procedure for Less Deviation Control

Use the procedure shown in the following flowchart when adjusting “Less Deviation Control.”

Always set the moment of inertia ratio. If necessary, set the notch filter. After making these settings, select Less Deviation Control and turn the power OFF and ON again.

Once Less Deviation Control has been selected, the normal autotuning function will be disabled regardless of the setting in Pn110 = n□□□x.

上正科技有限公司
購買、維修 此手冊零組件
電話： 037-466333
Email: service@repairtw.com
Line id: @zzzz
www.repairtw.com

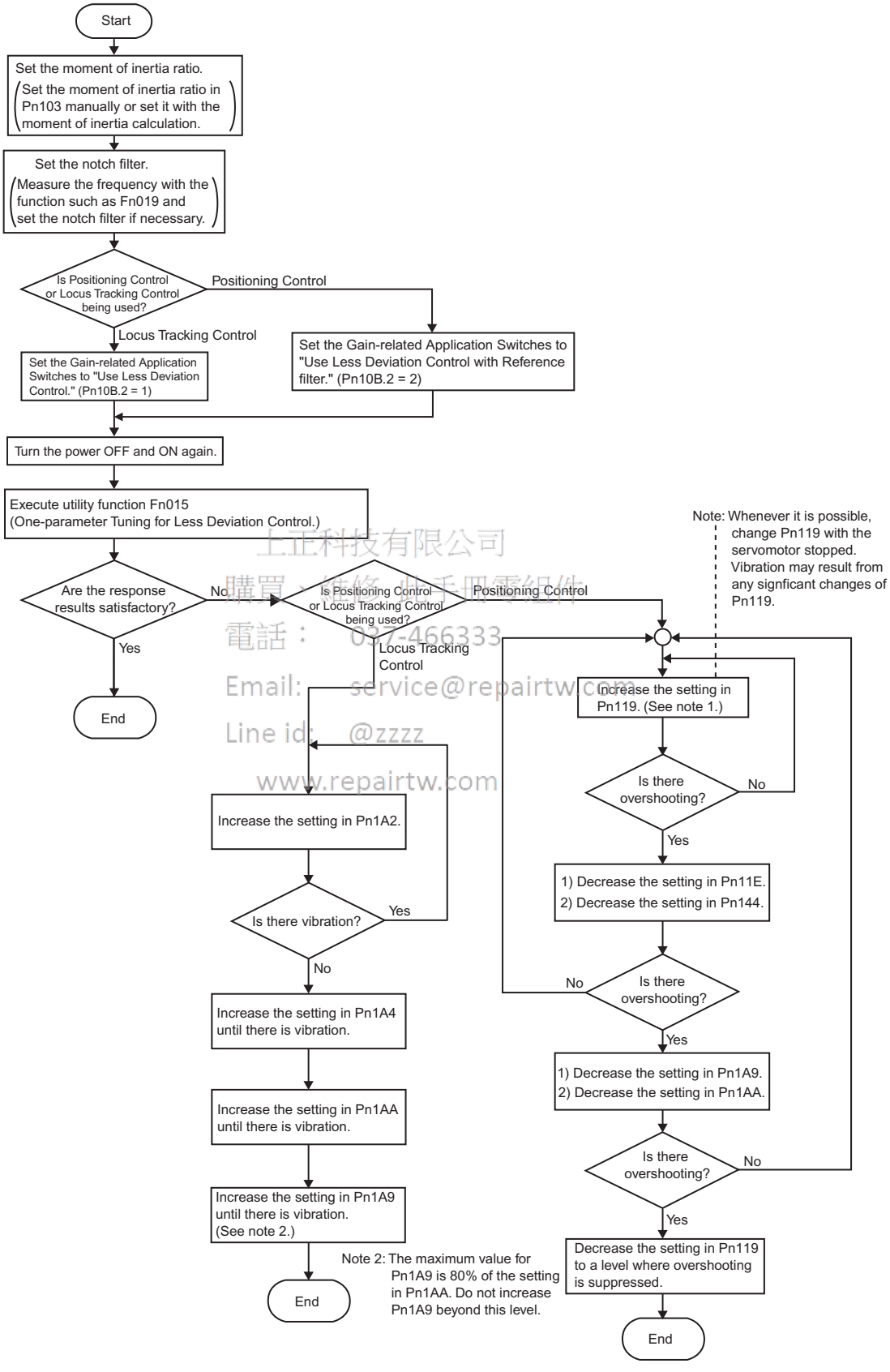

上正科技有限公司
購買、維修、出手四零組件
電話： 037-466333
Email: service@repairtw.com
Line id: @zzzz
www.repairtw.com

(3) One-parameter Autotuning Procedure for Less Deviation Control

The following table shows the procedure for one-parameter autotuning for less deviation control.
This function is used to when selecting “use Less Deviation Control” (Pn10B = n.□1□□or n.□2□□).

Operation Key	Display	Description
MODE/SET ∧ ∨	RUN -FUNCTION- Fn014 Fn015 Fn016 Fn017	Display the main menu of the utility function mode, and select Fn015.
DATA ∧ ∨	RUN -OnePrmTun- Less Deviation 1 Pn1A0 = 00060 Pn1A2 = 001.04 Pn1A4 = 000.52	Press the DATA Key. The gain values before the tuning are displayed. Scroll the display to see eleven servo gains line by line by pressing the ∧ or ∨ Key. *The screen differs depending on the setting of the second digit of the parameter Pn10B: 1 (Deviation control): Less Deviation 1 2 (Deviation control with reference filter) : Less Deviation 2
DATA	RUN -OnePrmTun- Less Deviation 1 Level = 0060	Press the DATA Key. The tuning level change screen appears. *Level (Tuning level setting) setting range: 1 to 500
∧ ∨ < >	RUN -OnePrmTun- Less Deviation 1 Level = 0065	Changing the set value for Level changes the values of eleven servo gains. To move the cursor between the lower two digits, press the < or > Key.
DATA	RUN -OnePrmTun- Less Deviation 1 Pn1A0 = 00065 Pn1A2 = 000.96 Pn1A4 = 000.48	Press the DATA Key. The adjusted values of the servo gains are displayed. Scroll the display to see eleven servo gains line by line by pressing the ∧ or ∨ Key.
DATA	Done -OnePrmTun- Less Deviation 1 Pn1A0 = 00065 Pn1A2 = 000.96 Pn1A4 = 000.48	Press the DATA Key. Done is displayed for about one second, and the servo gains adjusted by the tuning are overwritten in the corresponding parameters. *To return to the previous display without having saved the adjusted servo gains, press the < Key.
MODE/SET	RUN -OnePrmTun- Fn014 Fn015 Fn016 Fn017	Press the MODE/SET Key. The main menu of the utility function mode reappears.

This completes One-parameter Autotuning for Less Deviation Control.

上正科技有限公司
購買、維修 比手冊零組件
電話： 037-466333
Email: service@repairtw.com
Line id: @zzzz
www.repairtw.com

(4) Gain Switching during Less Deviation Control

When using Less Deviation Control, refer to *8.6.6 (2) Switchable Gain Combinations* for details on gain switching

(5) Function Limitations during Less Deviation Control

Some functions cannot be used together with the “Less Deviation Control” function.

(a) Utility Functions

The following utility functions will be disabled, even if they are selected.

- Rigidity setting during normal autotuning (Fn001)
- Save moment of inertia ratio data obtained from normal autotuning (Fn007)
- Advanced autotuning (Fn017)
- EasyFFT (Fn019)
- One-parameter autotuning (Fn01A)

(b) Control Methods usable in Normal Position Control

The following control methods will not function.

- Feed-forward
- Mode Switch
- Speed Feedback Compensation
- Predictive Control
- Moving Average Filter
- Normal Autotuning

上正科技有限公司
購買、維修 此手冊零組件
電話： 037-466333
Email: service@repairtw.com
Line id: @zzzz
www.repairtw.com

8.6.9 Torque Reference Filter

As shown in the following diagram, the torque reference filter contains three torque reference filters and two notch filters arrayed in series, and each filter operates independently. The notch filters can be enabled and disabled with the parameters.

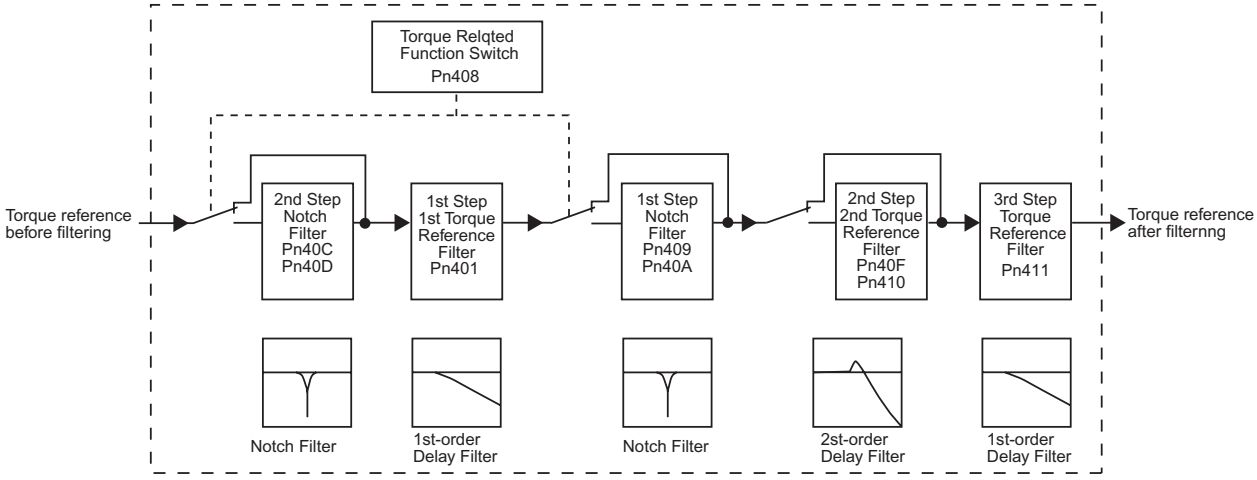

(1) Torque Reference Filter

上正科技有限公司
購買，維修，此手冊零組件
電話： 037-466333
Email: service@repairtw.com
Line id: @rtw
www.repairtw.com

If you suspect that machine vibration is being caused by the servodrive, try adjusting the filter time constants. This may stop the vibration. The lower the value, the better the speed control response will be, but there is a lower limit that depends on the machine conditions.

Pn401	1st Step 1st Torque Reference Filter		Speed / Position / Torque	
	Setting Range	Setting Unit	Factory Setting	Setting Validation
	0.00 to 655.35 ms	0.01 ms	1.00 ms	Immediately
Pn40F	2nd Step 2nd Torque Reference Filter Frequency		Speed / Position / Torque	
	Setting Range	Setting Unit	Factory Setting	Setting Validation
	100 to 2,000 Hz	1 Hz	2,000 Hz	Immediately
Pn410	2nd Step 2nd Torque Reference Filter Q Value		Speed / Position / Torque	
	Setting Range	Setting Unit	Factory Setting	Setting Validation
	0.50 to 10.00 Hz	0.01	0.70	Immediately
Pn411	3rd Step Torque Reference Filter		Speed / Position / Torque	
	Setting Range	Setting Unit	Factory Setting	Setting Validation
	0 to 65,535 µs	1 µs	0 µs	Immediately

Note: 1. The setting units for the 3rd step torque reference filter are different from the units for the 1st and 2nd step filters.
2. The 2nd step 2nd torque reference filter is disabled when parameter Pn40F (2nd step 2nd torque reference filter frequency) is set to 2,000 Hz (factory setting).

(2) Notch Filter

The notch filter can eliminate specific frequency vibration generated by sources such as resonances of ball screw axes. The notch filter puts a notch in the gain curve at the specific vibration frequency. The frequency components near the notch frequency can be eliminated with this characteristic. A higher notch filter Q value produces a sharper notch and phase delay.

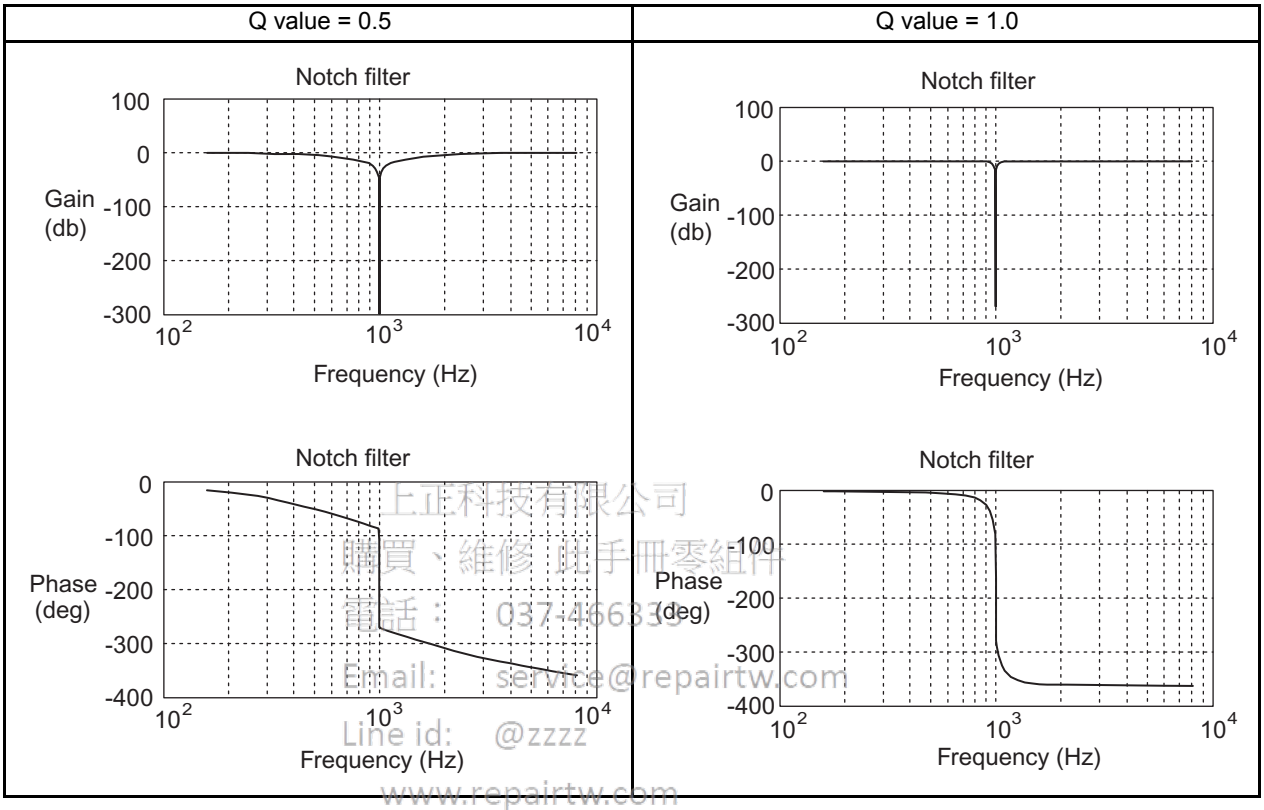

上正科技有限公司
購買、維修 此手冊零組件
電話： 037-466339
Email: service@repairtw.com
Line id: @zzzz
www.repairtw.com

Parameter		Meaning
Pn408	n.□□□**0**	First stage notch filter disabled.
	n.□□□**1**	First stage notch filter is used.
	n.□**0**□□	Second stage notch filter disabled.
	n.□**1**□□	Second stage notch filter is used.
Used notch filters are enabled. (It isn't necessary to turn the power OFF and ON again.)		

Set the machine's vibration frequency in the parameter of a notch filter that is being used.

Pn409	1st Step Notch Filter Frequency		Speed / Position / Torque	
	Setting Range	Setting Unit	Factory Setting	Setting Validation
	50 to 2,000 Hz	1 Hz	2,000 Hz	Immediately
Pn40C	2nd Step Notch Filter Frequency		Speed / Position / Torque	
	Setting Range	Setting Unit	Factory Setting	Setting Validation
	50 to 2,000 Hz	1 Hz	2,000 Hz	Immediately

When the vibration is suppressed but overshooting occurs, increase the Q value and check whether the overshooting is corrected.

Pn40A	1st Step Notch Filter Q Value		Speed / Position / Torque	
	Setting Range	Setting Unit	Factory Setting	Setting Validation
	0.50 to 10.00	0.01	0.70	Immediately

Pn40D	2nd Step Notch Filter Q Value			Speed Position Torque
	Setting Range	Setting Unit	Factory Setting	Setting Validation
	0.50 to 10.00	0.01	0.70	Immediately

IMPORTANT

1. Sufficient precautions must be taken when setting the notch frequencies. Do not set the notch frequencies (Pn409 or Pn40C) that is close to the speed loop's response frequency. Set the frequencies at least four times higher than the speed loop's response frequency. Setting the notch frequency too close to the response frequency may cause vibration and damage the machine. The speed loop response frequency is the value of the Speed Loop Gain (Pn100) when the Moment of Inertia Ratio (Pn103) is set to the correct value.
2. Change the Notch Filter Frequency (Pn409 or Pn40B) only when the motor is stopped. Vibration may occur if the notch filter frequency is changed when the motor is rotating.

8.6.10 Vibration Suppression on Stopping

When the servo gain has been increased, there may be vibration upon stopping (e.g., limit cycle) even though there is no vibration during operation. The function to suppress vibration on stopping, lowers the internal servo gain only when stopping. After the time specified for the Vibration Suppression Starting Time (Pn421) has elapsed from the time the difference of position reference becomes zero the internal servo gain is reduced at the rate specified for the Damping for Vibration Suppression on Stopping (Pn420).

上正科技有限公司
購買、維修 此手冊零組件
電話： 037-466333
Email: service@repairtw.com
Line id: @zzzz
www.repairtw.com

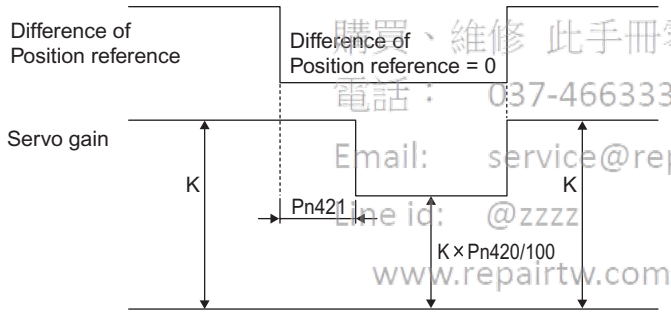

Pn420	Damping for Vibration Suppression on Stopping			Position
	Setting Range	Setting Unit	Factory Setting	Setting Validation
	10% to 100%	1%	100%	Immediately
Pn421	Vibration Suppression Starting Time			Position
	Setting Range	Setting Unit	Factory Setting	Setting Validation
	0 to 65,535 ms	1 ms	1,000 ms	Immediately

IMPORTANT

Set the Damping for Vibration Suppression on stopping (Pn420) is 50% or higher, and the Vibration Suppression Starting Time (Pn421) to 10 ms or longer. If lower value are set, the response characteristic may become worse and vibration may occur.

8.6.11 Backlash Compensation

Pn214	Backlash Compensation Amount			Position
	Setting Range	Setting Unit	Factory Setting	Setting Validation
	-32767 to 32767 reference units	Reference unit	0 reference units	Immediately
Pn215	Backlash Compensation Time Constant			Position
	Setting Range	Setting Unit	Factory Setting	Setting Validation
	0.00 to 655.35 ms	0.01 ms	0.00 ms	Immediately

Parameter		Meaning
Pn207	n.□**0**□□	Disabled. (Factory Setting)
	n.□**1**□□	Compensate in forward direction.
	n.□**2**□□	Compensate in reverse direction.

(1) Pn207=□1□□

The Backlash Compensation Amount (Pn214) is added to forward reference.

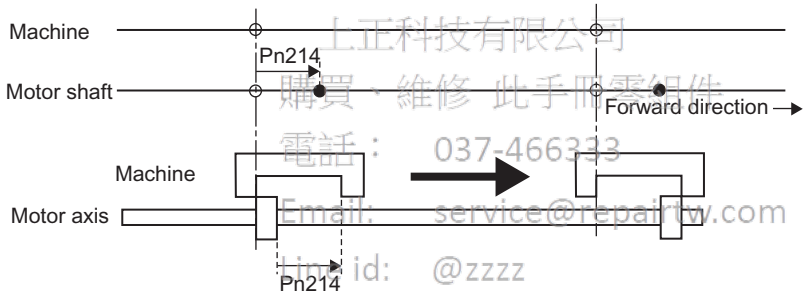

上正科技有限公司
購買、維修 此手冊零組件
電話： 037-466333
Email: service@repairtw.com
Line id: @zzzz
www.repairtw.com

(2) Pn207=□2□□

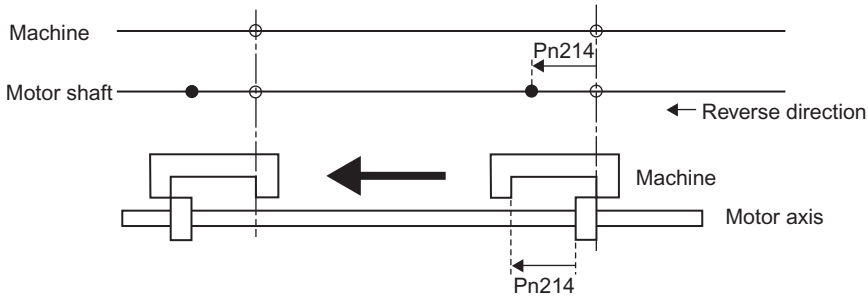

The Backlash Compensation Amount (Pn214) is added to reverse reference.

8.6.12 Position Integral

Pn11F	Position Integral			Position
	Setting Range	Setting Unit	Factory Setting	Setting Validation
	0.0 to 5000.0 ms	0.1 ms	0.0 ms	Immediately
This function adds an integral control operation to the position loop. It is effective for electronic cam or electronic shaft applications. Refer to the application examples in the user's manual for the MP9□□ or MP2□□□ Controllers from Yaskawa for details.				

8.7 Analog Monitor

Signals for analog voltage references can be monitored.

To monitor analog signals, connect the analog monitor cable (JZSP-CA01) to the connector CN5.

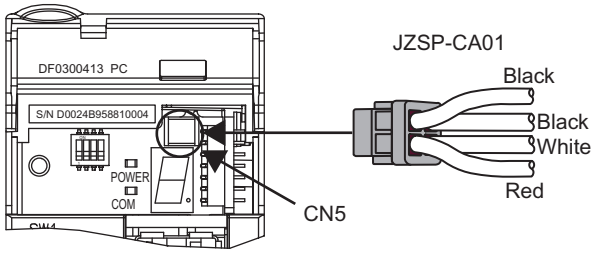

Pin Number	Line Color	Signal Name	Description
1	Red	Analog monitor 2	Motor speed: 1 V/1000 RPM
2	White	Analog monitor 1	Torque reference: 1 V/100% Rated torque
3,4	Black (2 lines)	GND (0 V)	-

Note: The examples shown in the table are factory settings. To change the settings, reset parameters Pn006 and Pn007.

The output voltages on analog monitor 1 and 2 are calculated by the following equations.

Analog monitor 1 output voltage = {(-1) × Signal selection (Pn006=□□XX) × Signal multiplier (Pn006=□X□□) } + Offset voltage [V] (Pn550)

Analog monitor 2 output voltage = {(-1) × Signal selection (Pn007=□□XX) × Signal multiplier (Pn007=□X□□) } + Offset voltage [V] (Pn551)

上正科技有限公司
購買、維修 此手冊零組件
電話： 037-466333
Email: service@repairtw.com
Line id: @zzzz
www.repairtw.com

(1) Related Parameters

The following signals can be monitored.

(a) Pn006 and Pn007: Function Selections

Parameter		Description		
		Monitor Signal	Measurement Gain	Remarks
Pn006 Pn007	n.□□**00**	Motor speed	1 V/1000 RPM	Pn007 Factory Setting
	n.□□**01**	Speed reference	1 V/1000 RPM	
	n.□□**02**	Gravity Compensation Torque (Pn422) subtract from Torque reference	1 V/100% Rated torque	Pn006 Factory Setting
	n.□□**03**	Position error*	0.05 V/reference unit	–
	n.□□**04**	Position amp error*	0.05 V/reference unit	Position error after electronic gear conversion
	n.□□**05**	Position reference speed (speed calculation)	1 V/1000 RPM	–
	n.□□**06**	Speed calculation	1 V/1000 RPM	–
	n.□□**07**	Reserved	–	–
	n.□□**08**	Positioning completed	Positioning completed: 5 V Positioning not completed: 0 V	–
	n.□□**09**	Speed feed-forward	1 V/1000RPM	–
	n.□□**0A**	Torque feed-forward	1 V/100% Rated torque	–
	n.□□**0B**	Reserved	–	–
	n.□□**0C**			
	n.□□**0D**	Reserved	–	–
	n.□□**0E**	Reserved	–	–
	n.□□**0F**	Reserved	–	–

* When using speed control, the position error monitor signal is 0.

卡孚科技有限公司
購買、維修 此手冊零組件
電話： 037-466333
Email: service@repairtw.com
Line id: @zzzz
www.repairtw.com

The monitor factor can be changed by setting parameters Pn006.2 and Pn007.2.

Parameter		Multiplier	Remarks
Pn006 **Pn007**	n.□**0**□□	× 1	Factory Setting
	n.□**1**□□	× 10	–
	n.□**2**□□	× 100	–
	n.□**3**□□	× 1/10	–
	n.□**4**□□	× 1/100	–

Pn550	Analog Monitor 1 Offset Voltage		Speed Position Torque	
	Setting Range	Setting Unit	Factory Setting	Setting Validation
	-1000.0 to 1000.0	0.1 V	0.0 V	Immediately
Pn551	Analog Monitor 2 Offset Voltage		Speed Position Torque	
	Setting Range	Setting Unit	Factory Setting	Setting Validation
	-1000.0 to 1000.0	0.1 V	0.0 V	Immediately

■ Example

If Pn006 = 0102, Pn422 = 10.0 [%], and Pn550 = 3.0 [V], then

Analog Monitor 1 = Torque reference

= {(-1) × (Torque reference[%]-10%) × 10} + 3[V]

If the torque is 2%,

$$= \{(-1) \times (52\ [\%]-10\ [\%]) \times \frac{1\ [V]}{100\ [\%]} \times 10\} + 3\ [V] = -7.2\ [V]$$ (Analog Monitor 1 output voltage)

上正科技有限公司
購買、維修、此手冊零組件
電話： 037-466333
Email: service@repairtw.com
Line id: @zzzz
www.repairtw.com

INFO

The analog monitor output voltage is ±8 V (maximum). The output will be limited to ±8 V even if this value is exceeded in the above calculations.

9

Fully-closed Control

9.1 System Configuration for SERVOPACK with Fully-closed Control - 9-2

9.2 Serial Converter Unit - 9-3

9.2.1 Specifications - 9-3

9.2.2 Analog Signal Input Timing - 9-4

9.2.3 Connection Example of Linear Scale by Heidenhain - - - - - - - - - - - - - - 9-5

9.2.4 Connection Example of Linear Scale by Renishaw - - - - - - - - - - - - - - - 9-6

9.2.5 Connection Cable between SERVOPACK and Serial Converter Unit - 9-7

9.3 Internal Configuration of Fully-closed Control - - - - - - - - - - - - - - 9-8

9.4 Related Parameters - 9-9

上揚科技有限公司
購買、維修 電子用零組件
電話: 037-466333
Email: service@repairtw.com
Line Id: @zzzz
www.repairtw.com

9.1 System Configuration for SERVOPACK with Fully-closed Control

The following figure shows the system configuration for fully-closed control.

The SERVOPACK model for fully-closed control is SGDS-□□□02A.

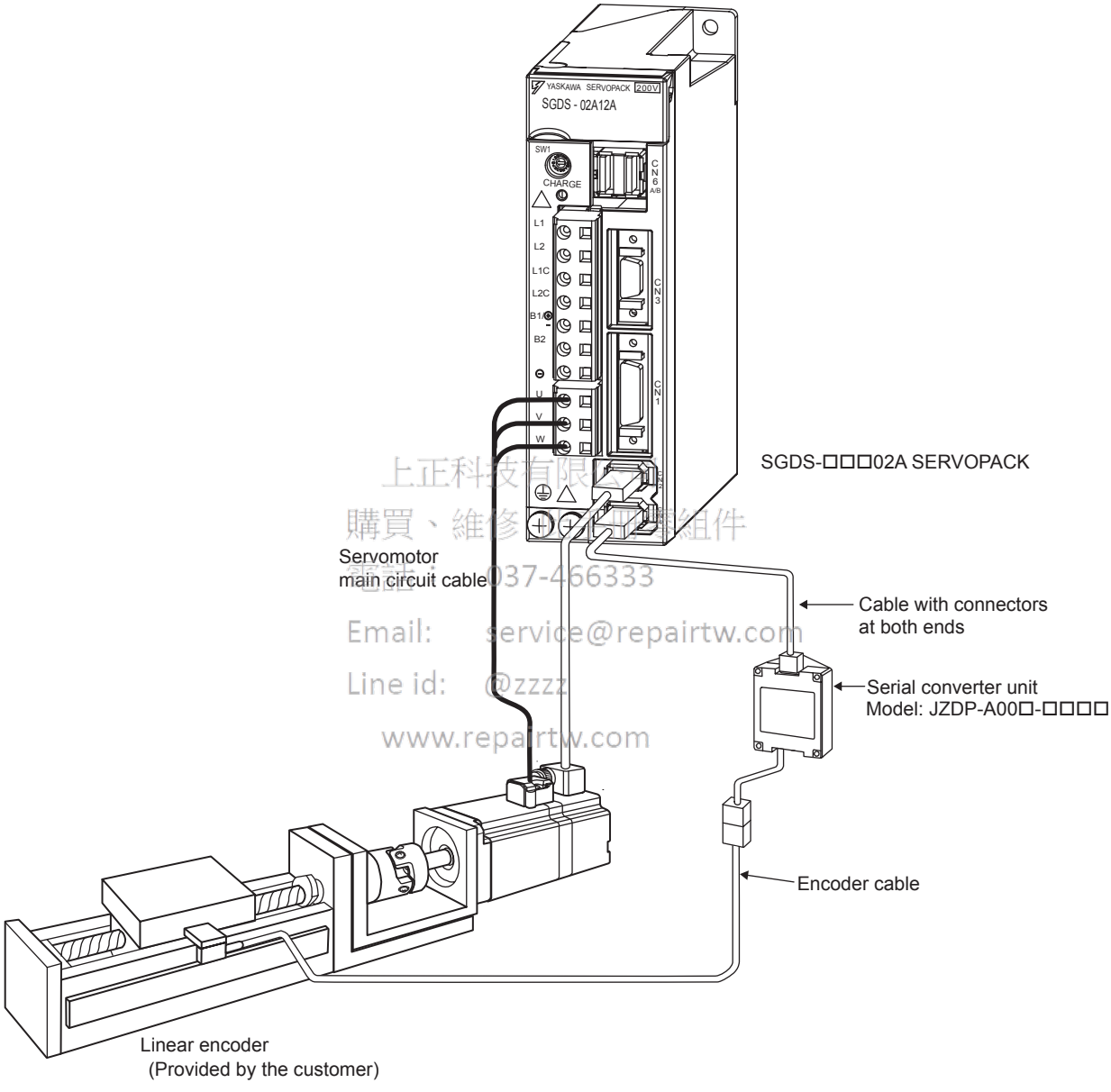

上正科技有限公司
購買、維修、回收電子組件
電話: 037-466333
Email: service@repairtw.com
Line id: @zzzz
www.repairtw.com

9.2 Serial Converter Unit

9.2.1 Specifications

(1) Model: JZDP-A00□-□□□

(2) Characteristics and Specifications

Items		Specifications
Electrical Characteristics	Power Supply Voltage	+5.0V±5%, ripple content 5% max.
	Current Consumption	120 mA Typ. 350 mA Max.
	Signal Resolution	Input 2-phase sine wave: 1/256 pitch
	Max. Response Frequency	250 kHz
	Analog Input Signals * (cos, sin, Ref)	Differential input amplitude: 0.4 V to 1.2V Input signal level: 1.5 V to 3.5V
	Pole Sensor Input Signal	CMOS level
Mechanical Characteristics	Approx. mass	150 g
	Dimensions	90 × 60 × 23 mm (3.54 × 2.36 × 0.91 in)
	Vibration Resistance	98 m/s^2 max. (1 to 2500 Hz) in three directions
	Shock Resistance	980 m/s^2, (11 ms) two times in three directions
Environmental Conditions	Operating temperature	0 °C to 55 °C (32 to 131 °F)
	Storage temperature	-20 °C to +80 °C (-4 to +176 °F)
	Humidity	20 % to 90 %RH (without condensation)

* Input a value within the specified range. Otherwise, incorrect position information is output, and the device may be damaged.

三正科技有限公司
購買、維修、外手機零組件
電話: 03/-456333
Email: service@repairtw.com
Line id: @zzzz
www.repairtw.com

9.2.2 Analog Signal Input Timing

The following figure shows the input timing of the analog signals.

When the cos and sin signals are shifted 180 degrees, the differential signals are the /cos and /sin signals. The specifications of the cos, /cos, sin, and /sin signals are identical except for the phase.

Input the signals Ref and /Ref so that they shall cross each other as shown in the figure because they are input into the converter. When they are crossed, the output data will be counted up.

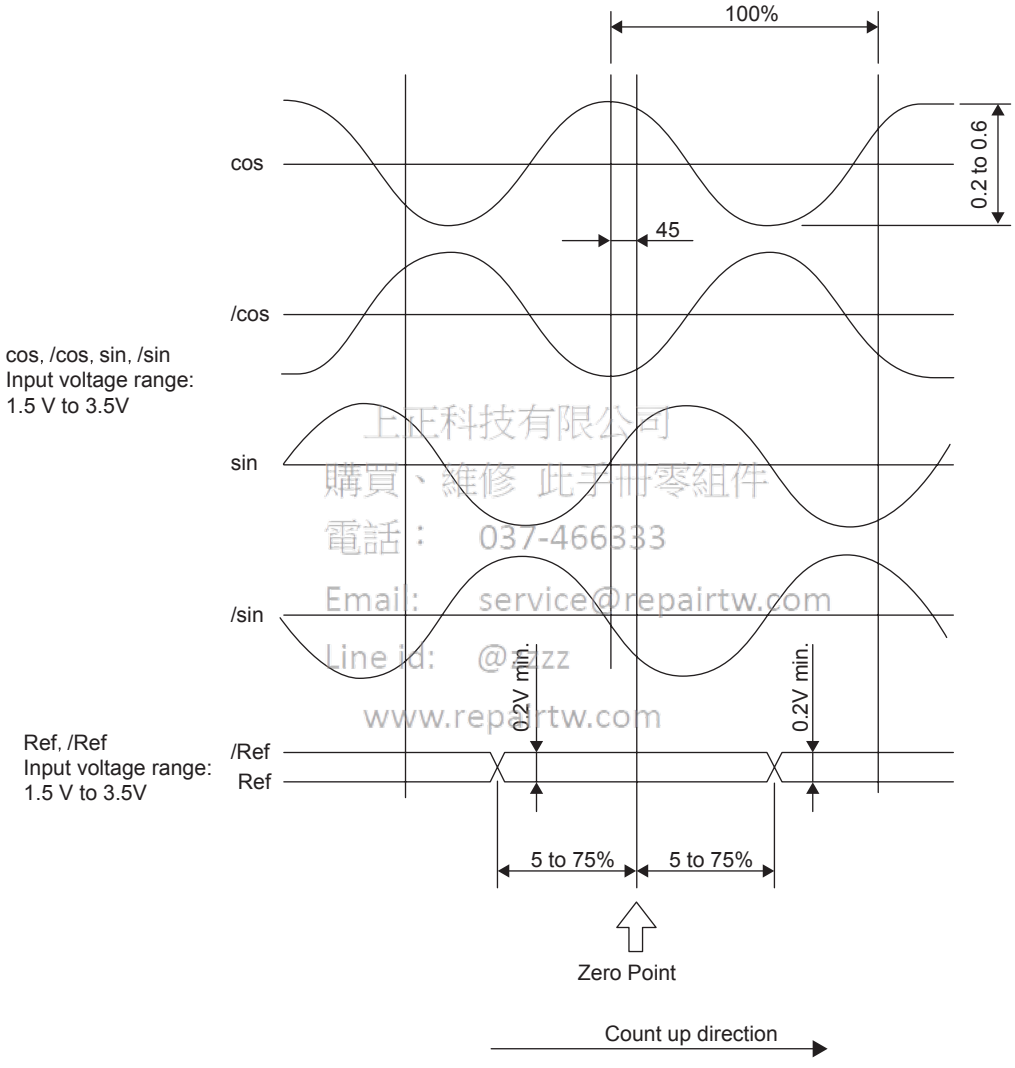

上正科技有限公司
購買、維修 此手冊零組件
電話： 037-466333
Email: service@repairtw.com
Line id: @zzzz
www.repairtw.com

IMPORTANT

■Precautions

1. Never perform insulation resistance and withstand voltage tests.
2. When analog signals are input to the serial converter unit, noise influence on the analog signals affects the unit's ability to output correct position information. The analog cable must be as short as possible and shielded.
3. Do not connect or disconnect the unit while power is being supplied, or the unit may be damaged.
4. When using multiple axes, use a shield cable for each axis. Do not use a shield cable for multiple axes.

9.2.3 Connection Example of Linear Scale by Heidenhain

(1) Serial Converter Unit Model: JZDP-A003-000

(2) Connection Example

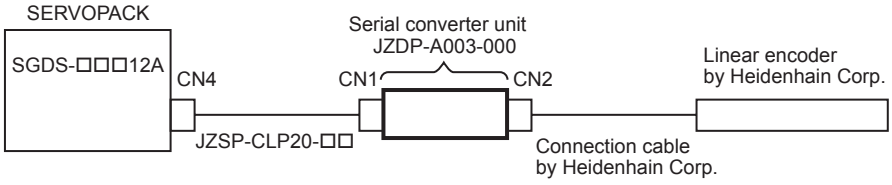

(3) Dimensional Drawing

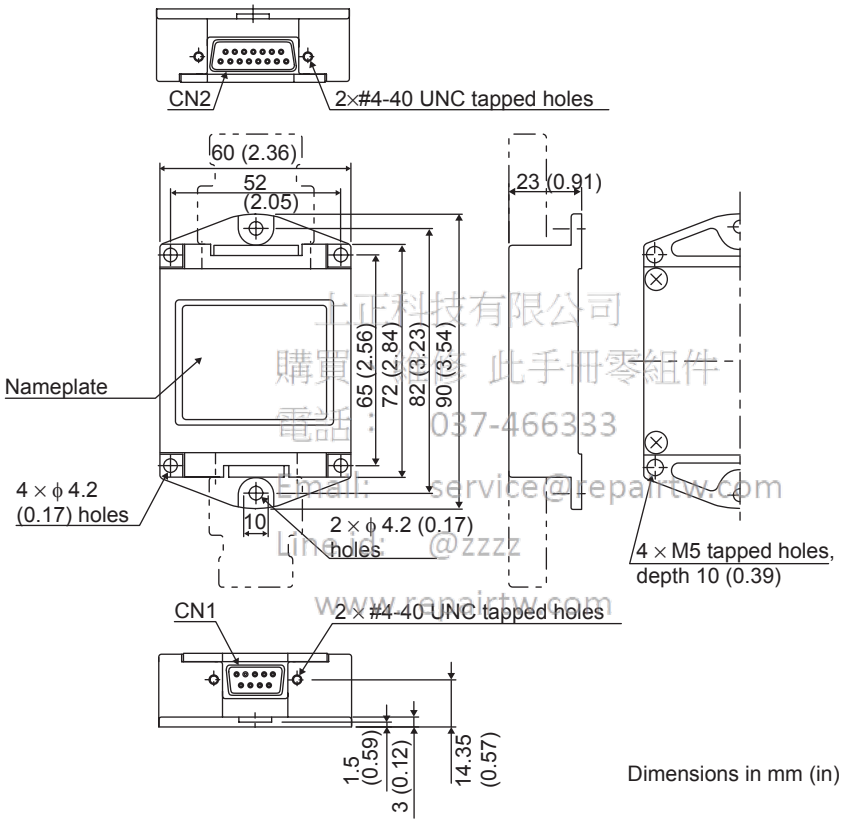

上正科技有限公司
購買/維修 此手冊零組件
電話：037-466333
Email: service@repairtw.com
Line id: @zzzz
www.repairtw.com

Pin No.	Signal
1	+5V
2	S-phase output
3	Empty
4	Empty
5	0V
6	/S-phase output
7	Empty
8	Empty
9	Empty
Case	Shield

CN1
SERVOPACK end
Serial data output

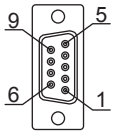

17-series connector
model:
17JE-13090-02 (D2C)
(socket) by DDK Ltd.

Pin No.	Signal
1	cos input (A+)
2	0V
3	sin input (B+)
4	+5V
5	Empty
6	Empty
7	/Ref input (R-)
8	Empty
9	/cos input (A-)
10	0V sensor
11	/sin input (B-)
12	5V sensor
13	Empty
14	Ref input (R+)
15	Empty
Case	Shield

CN2
Linear encoder end
Analog signal input

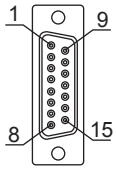

17-series connector
model:
17JE-13150-02 (D2C)
(socket) by DDK Ltd.

Note: Do not use the empty pins.
The linear scale (analog $1V_{p-p}$ output, D-sub 15-pin) manufactured by Heidenhain Corp. can be directly connected.

9.2.4 Connection Example of Linear Scale by Renishaw

(1) Serial Converter Unit Model: JZDP-A005-000

(2) Connection Example

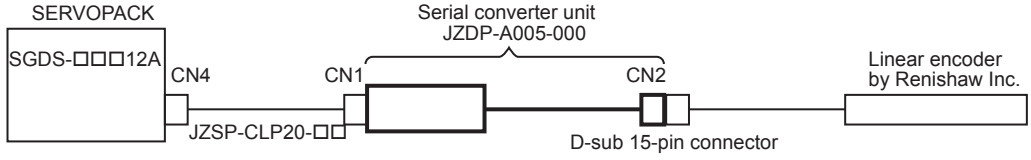

(3) Dimensional Drawing

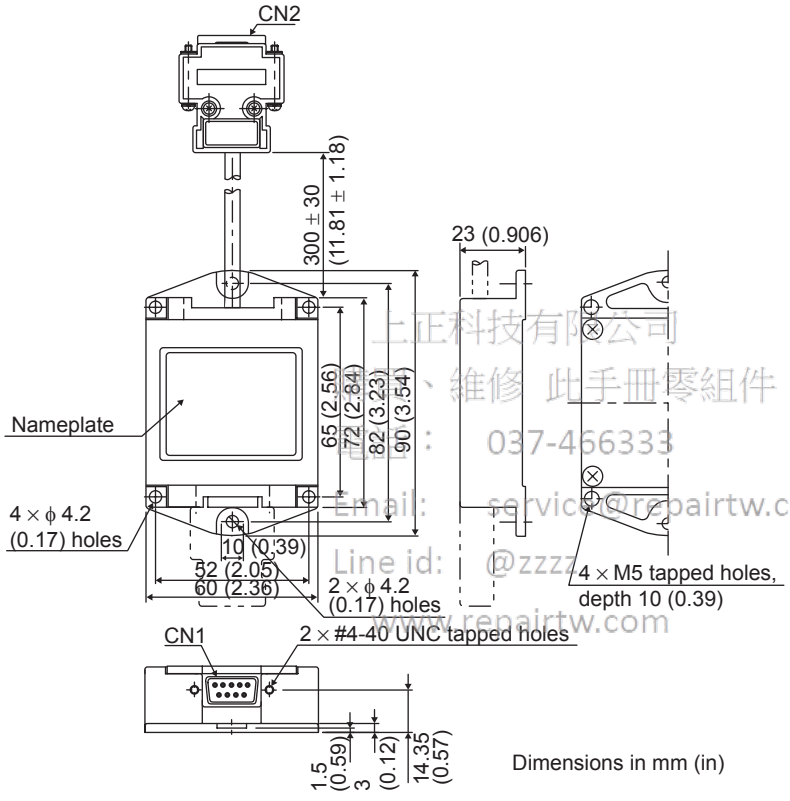

Dimensions in mm (in)

上正科技有限公司
電腦、維修 此手冊零組件
電話： 037-466333
Email: service@repairtw.com
Line id: @zzzz
www.repairtw.com

Pin No.	Signal
1	+5V
2	S-phase output
3	Empty
4	Vq
5	0V
6	/S-phase output
7	Empty
8	0V(Vq)
9	Empty
Case	Shield

SERVOPACK does not have the function to process Vq signals.

CN1

SERVOPACK end
Serial data output

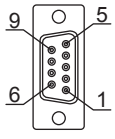

17-series connector model:
17JE-13090-02 (D2C) (socket) by DDK Ltd.

Pin No.	Signal
1	/cos input (V1-)
2	/sin input (V2-)
3	Ref input (V0+)
4	+5V
5	5Vs
6	Empty
7	Empty (Vx)
8	Limit switch (Vq)
9	cos input (V1+)
10	sin input (V2+)
11	/Ref input (V0−)
12	0V
13	0Vs
14	Empty
15	Inner (0V)
Case	Shield

CN2

Linear encoder end
Analog signal input

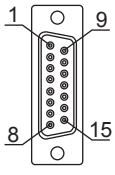

17-series connector model:
17JE-13150-02 (D2C) (socket) by DDK Ltd.

Note: Do not use empty pins.
The linear scale (analog 1Vp-p output, D-sub 15-pin) by Renishaw Inc. can be directly connected. However, the BID and DIR signals are not connected.
Use the linear scale end connector to change the home position specifications of the linear scale.

9.2.5 Connection Cable between SERVOPACK and Serial Converter Unit

(1) Recommended Cables

Name	Application	Type	Length (L)
Cable with connectors at both ends	Connection between SERVOPACK connector CN4 and serial converter unit	JZSP-CLP20-03	3 m (9.84 in)
		JZSP-CLP20-05	5 m (15.40 in)
		JZSP-CLP20-10	10 m (32.81 in)
		JZSP-CLP20-15	15 m (49.21 in)
		JZSP-CLP20-20	20 m (65.62 in)

(2) Dimensional Drawing

- Cable with Connectors at Both Ends

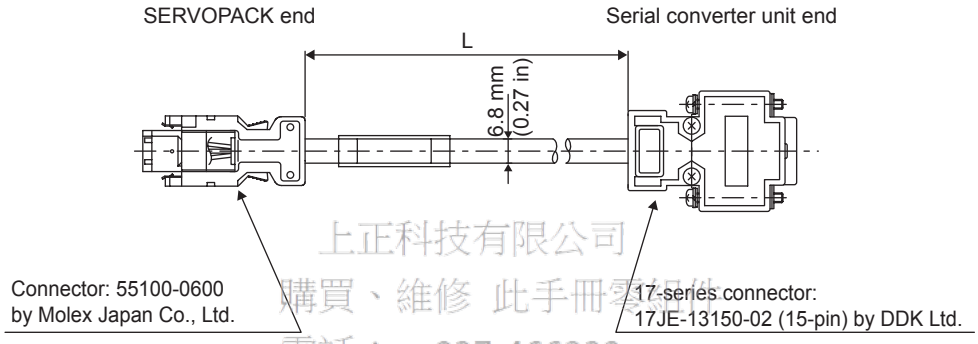

上正科技有限公司
購買、維修 此手冊零組件
電話： 037-466333
Email: service@repairtw.com
Line id: @zzzz
www.repairtw.com

9.3 Internal Configuration of Fully-closed Control

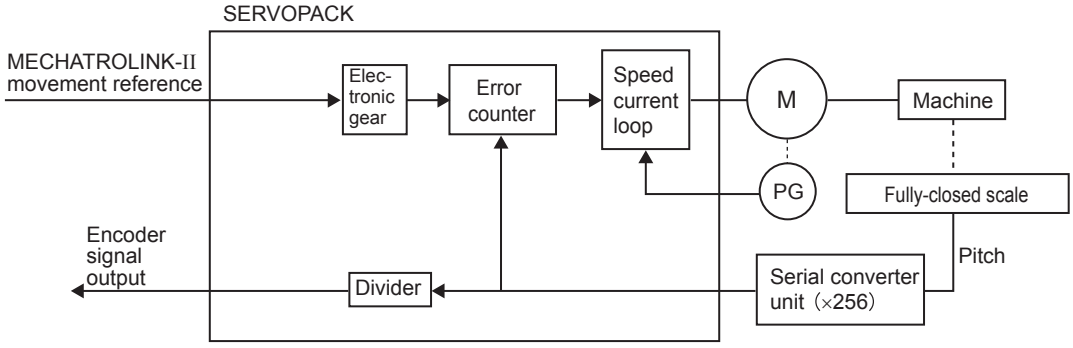

Note: Either an incremental or an absolute encoder can be used.

上正科技有限公司
購買、維修 此手冊零組件
電話： 037-466333
Email: service@repairtw.com
Line id: @zzzz
www.repairtw.com

9.4 Related Parameters

(1) Parameters

The following table shows the parameters related to the fully-closed control of the SGDS-□□□12A SERVOPACKs.

Pn20A	Number of External Scale Pitches			position
	Setting Range	Setting Unit	Factory Setting	Setting Validation
	100 to 1048576 pitch/Rev	1 pitch/Rev	32768 P/Rev	After restart

Sets the number of pitches (cycles) of the sine wave for the external scale.

Set the number of pitches between 100 to 1048576 (2^{20}) pulses. Any fractions cause differences on the speed monitor signals of the position loop gain (Pn102) and feed forward (Pn109), but do not cause position errors. Set the parameter to the number of pulses multiplied by 1.

Pn281	Encoder Output Resolution			position
	Setting Range	Setting Unit	Factory Setting	Setting Validation
	1 to 256 / (pitch × 4 multiplier)	1P/ (pitch × 4 multiplier)	20P/ (pitch × 4 multiplier)	After restart

Sets the number of output pulses of the PG output signal (PAO, PBO and PCO) from the SERVOPACK to an external device.

The position data from the external scale is divided by the number of pulses set in Pn281 and then output. Set the number of output pulses per pitch multiplied by 4.

If using a fully-closed encoder for the reversed rotation mode, the signal PBO is reversed and output.

上亞科技有限公司
購買、維修、此手冊零組件
電話： 037-466333
E-mail: service@repairtw.com
Line Id: @777
www.repairtw.com

Pn51B	Excessive Error Level Between Servomotor and Load Position			position
	Setting Range	Setting Unit	Factory Setting	Setting Validation
	0 to 1073741824(2^{30}) reference units	1 reference unit	1000 reference units	Immediately

Pn52A	Multiplier per One Fully-Closed Rotation			position
	Setting Range	Setting Unit	Factory Setting	Setting Validation
	1 % to 100%	1%	20%	Immediately

If the detected difference between the external scale position and the encoder position is above the set level, the alarm A.D10 “Excessive error between servomotor and load positions” occurs. This function can be used to prevent runaway due to a damaged scale and to detect slip in the belt mechanism.

The alarm A.D10 “Excessive error between servomotor and load positions” is detected as shown in the following flowchart.

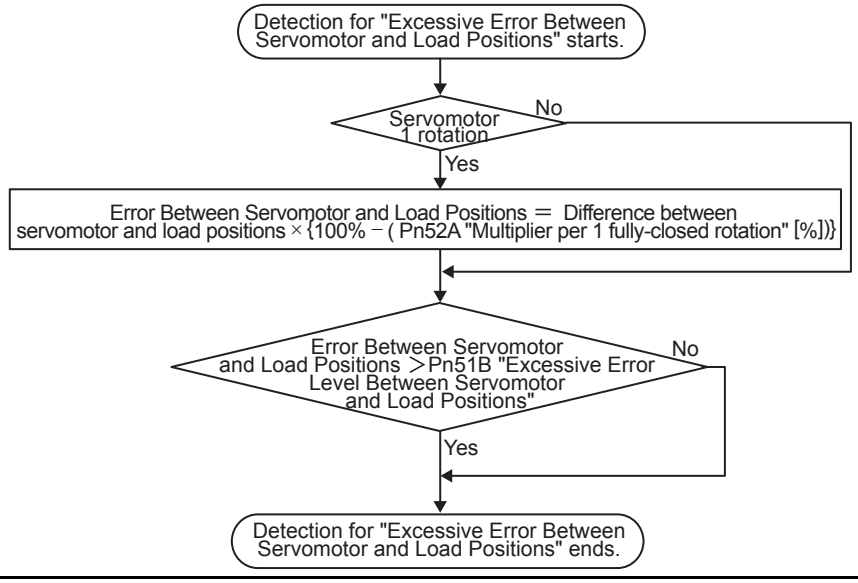

(2) Switches

Parameter		Name	Meaning
Pn002	n.0□□□	Fully-Closed Encoder Usage	Do not use. (Factory setting)
	n.1□□□		Use fully-closed encoder in forward rotation direction.
	n.2□□□		Reserved (Do not set).
	n.3□□□		Use fully-closed encoder in reversed rotation direction.
	n.4□□□		Reserved (Do not set).

Set parameter Pn002=n.0□□□ for semi-closed position control. Change accordingly the setting for electronic gear for semi-closed control and fully-closed control.

If using the reverse rotation mode, two parameters must be set:
Pn000=n.□□□X for semi-closed control and
Pn002=n.X□□□ for fully closed control
Change the settings according to your required specifications.

Incorrect settings may cause run away of the connected machine.
To change the rotation direction in a standard operation, change the settings of both Pn000.0 and Pn002.3.
If the connected machine runs away, change the setting of either Pn000.0 or Pn002.3.

Parameter		Name	Meaning
Pn006	n.□□07	Analog Monitor 1 Signal Selection	Position error between servomotor and load [0.01V/1 reference unit] * Factory setting: n.□□02
Pn007	n.□□07	Analog Monitor 2 Signal Selection	Position error between servomotor and load [0.01V/1 reference unit] * Factory setting: n.□□00

專業維修 此手冊零組件
電話： 03/4663-3
Email: service@repairtw.com
Line id: @zzzz
www.repairtw.com

10

Inspection, Maintenance, and Troubleshooting

10.1 Troubleshooting - - - - - - - - - - 10-2
10.1.1 Status Display on Panel Operator - - - - - - - - - - 10-2
10.1.2 Alarm Display Table - - - - - - - - - - 10-3
10.1.3 Warning Displays - - - - - - - - - - 10-6
10.1.4 Troubleshooting of Alarm and Warning - - - - - - - - - - 10-7
10.1.5 Troubleshooting for Malfunction without Alarm Display - - - - - - - - 10-20

10.2 Inspection and Maintenance - - - - - - - - - - 10-24
10.2.1 Servomotor Inspection - - - - - - - - - - 10-24
10.2.2 SERVOPACK Inspection - - - - - - - - - - 10-24
10.2.3 SERVOPACK's Parts Replacement Schedule - - - - - - - - - - 10-25

上正科技有限公司
購買、維修 此手冊零組件
電話： 037-466333
Email: service@repairtw.com
Line id: @zzzz
www.repairtw.com

10.1 Troubleshooting

10.1.1 Status Display on Panel Operator

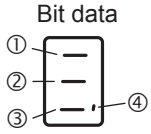

(1) Bit Data Display

Bit Position as shown in the figure	Bit Data	Display Contents
①	Motor rotation detection	Lit when the servomotor is being rotated.
②	Servo ON/OFF	Lit when the servo is OFF. Unlit when the servo is ON.
③	Reference input detection	Lit when a reference is being input.
④	CONNECT completion	Lit when the connection is completed.

(2) Alarm and Warning Display

上正科技有限公司
購買、維修 此手冊零組件
電話： 037-466333
Email: service@repairtw.com
Line id: @zzzz
www.repairtw.com

The following figure shows how the alarm or warning codes are displayed letter by letter on the indicator on the front panel of the SERVOPACK.

Example : Alarm A.E60

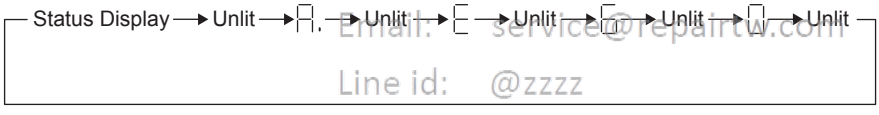

10.1.2 Alarm Display Table

Alarm display, names, and meanings are shown in table 10.1.
If an alarm occurs, the servomotor can be stopped by doing either of the following operations.

- DB STOP: Stops the servomotor immediately using the dynamic brake.
- ZERO-SPEED STOP: Stops the servomotor by setting the speed reference to “0.”

Table 10.1 Alarm Display Table

Alarm Display	Alarm Name	Meaning	Servomotor Stop Method	Alarm Reset	Servo Alarm (ALM) Output
A.020	Parameter Checksum Error 1	The data of the parameter in the SERVOPACK is incorrect.	DB stop	N/A	
A.021	Parameter Format Error 1	The data of the parameter in the SERVOPACK is incorrect.	DB stop	N/A	
A.022	System Parameter Checksum Error 1	The data of the parameter in the SERVOPACK is incorrect.	DB stop	N/A	
A.023	Parameter Password Error 1	The data of the parameter in the SERVOPACK is incorrect.	DB stop	N/A	
A.02A	Parameter Checksum Error 2	The data of the parameter in the SERVOPACK is incorrect.	DB stop	N/A	
A.02b	System Parameter Checksum Error 2	The data of the parameter in the SERVOPACK is incorrect.	DB stop	N/A	
A.030	Main Circuit Detector Error	Detection data for power circuit is incorrect.	DB stop	Available	
A.040	Parameter Setting Error 1	The parameter setting is outside the allowable setting range.	DB stop	N/A	
A.04A	Parameter Setting Error 2	The parameter setting is outside the allowable setting range.	DB stop	N/A	
A.041	Dividing Pulse Output Setting Error	The PG dividing pulse setting (Pn212) is outside the allowable setting range or not satisfies the setting conditions.	DB stop	N/A	
A.050	Combination Error	SERVOPACK and servomotor capacities do not match each other.	DB stop	Available	
A.100	Overcurrent or Heat Sink Overheated	An overcurrent flowed through the IGBT. Heat sink of SERVOPACK was overheated.	DB stop	N/A	
A.300	Regeneration Error Detected	Regenerative circuit or regenerative resistor is faulty.	DB stop	Available	H
A.320	Regenerative Overload	Regenerative energy exceeds regenerative resistor capacity.	Zero speed stop	Available	
A.330	Main Circuit Power Supply Wiring Error	The power supply to the main circuit does not match the parameter Pn001 setting.	DB stop	Available	
A.400	Overvoltage	Main circuit DC voltage is excessively high.	DB stop	Available	
A.410	Undervoltage	Main circuit DC voltage is excessively low.	Zero speed stop	Available	
A.510	Overspeed	The motor speed is excessively high.	DB stop	Available	
A.511	Dividing Pulse Output Overspeed	The motor speed upper limit of the set PG dividing pulse (Pn212) is exceeded.	DB stop	Available	
A.520	Vibration Alarm	Vibration at the motor speed was detected.	DB stop	Available	
A.710	Overload: High Load	The motor was operating for several seconds to several tens of seconds under a torque largely exceeding ratings.	Zero speed stop	Available	
A.720	Overload: Low Load	The motor was operating continuously under a torque largely exceeding ratings.	DB stop	Available	
A.730	Dynamic Brake Overload	When the dynamic brake was applied, rotational energy exceeded the capacity of dynamic brake resistor.	DB stop	Available	
A.740	Overload of Surge Current Limit Resistor	The main circuit power was frequently turned ON and OFF.	DB stop	Available	
A.7A0	Heat Sink Overheated	The heat sink of SERVOPACK overheated.	Zero speed stop	Available	

上正科技有限公司
購買、維修 此手冊零組件
電話： 03/466333
Email: service@repairtw.com
Line ID: @zzz
www.repairtw.com

Table 10.1 Alarm Display Table (Cont'd)

Alarm Display	Alarm Name	Meaning	Servomotor Stop Method	Alarm Reset	Servo Alarm (ALM) Output
A.810	Encoder Backup Error	All the power supplies for the absolute encoder have failed and position data was cleared.	DB stop	N/A	
A.820	Encoder Checksum Error	The checksum results of encoder memory is incorrect.	DB stop	N/A	
A.830	Absolute Encoder Battery Error	Battery voltage for the absolute encoder has dropped.	DB stop	Available	
A.840	Encoder Data Error	Data in the encoder is incorrect.	DB stop	N/A	
A.850	Encoder Overspeed	The encoder was rotating at high speed when the power was turned ON.	DB stop	N/A	
A.860	Encoder Overheated	The internal temperature of encoder is too high.	DB stop	N/A	
A.870	Fully-closed Serial Encoder Checksum Error Alarm	Checksum results error of encoder memory.	DB stop	N/A	
A.880	Fully-closed Serial Encoder Data Alarm	Encoder internal data was incorrect.	DB stop	N/A	
A.8A0	Fully-closed Serial Encoder Scale Error	Linear encoder is faulty.	DB stop	Available	
A.8A1	Fully-closed Serial Encoder Module Error	Linear encoder or serial converter unit is faulty.	DB stop	Available	
A.8A2	Fully-closed Serial Encoder Sensor Error (Incremental)	Linear encoder is faulty.	DB stop	Available	
A.8A3	Fully-closed Serial Encoder Position Error (Absolute)	Encoder feedback position is faulty.	DB stop	Available	
A.b31	Current Detection Error1	Phase-U current sensor is faulty.	DB stop	N/A	
A.b32	Current Detection Error 2	Phase-V current sensor is faulty.	DB stop	N/A	H
A.b33	Current Detection Error 3	Phase-W current sensor is faulty.	DB stop	N/A	
A.bF0	System Alarm 0	"Internal program error 0" of SERVOPACK occurred.	DB stop	N/A	
A.bF1	System Alarm 1	"Internal program error 1" of SERVOPACK occurred.	DB stop	N/A	
A.bF2	System Alarm 2	"Internal program error 2" of SERVOPACK occurred.	DB stop	N/A	
A.bF3	System Alarm 3	"Internal program error 3" of SERVOPACK occurred.	DB stop	N/A	
A.bF4	System Alarm 4	"Internal program error 4) of SERVOPACK occurred.	DB stop	N/A	
A.C10	Servo Overrun Detected	The servomotor ran out of control.	DB stop	Available	
A.C80	Absolute Encoder Clear Error and Multi-turn Limit Setting Error	The multi-turn for the absolute encoder was not properly cleared or set.	DB stop	N/A	
A.C90	Encoder Communications Error	Communications between SERVOPACK and encoder is not possible.	DB stop	N/A	
A.C91	Encoder Communications Position Data Error	An encoder position data calculation error occurred.	DB stop	N/A	
A.C92	Encoder Communications Timer Error	An error occurs in the communications timer between the encoder and the SERVOPACK.	DB stop	N/A	
A.CA0	Encoder Parameter Error	Encoder parameters are faulty.	DB stop	N/A	
A.Cb0	Encoder Echoback Error	Contents of communications with encoder is incorrect.	DB stop	N/A	
A.CC0	Multi-turn Limit Disagreement	Different multi-turn limits have been set in the encoder and SERVOPACK.	DB stop	N/A	
A.CF1	Fully-closed Serial Converter Unit Communications Error (Reception Error)	Communication of fully-closed serial converter unit is faulty.	DB stop	N/A	

上正科技有限公司
購買 維修 此手冊零組件
電話： 037-466333
Email: service@repairtw.com
Line Id: @7377
www.repairtw.com

Table 10.1 Alarm Display Table (Cont'd)

Alarm Display	Alarm Name	Meaning	Servomotor Stop Method	Alarm Reset	Servo Alarm (ALM) Output
A.CF2	Fully-closed Serial Converter Unit Communications Error (Timer Stopped)	Communication of fully-closed serial converter unit is faulty.	DB stop	N/A	
A.d00	Position Error Pulse Overflow	Position error pulse exceeded parameter (Pn520).	DB stop	Available	
A.d01	Position Error Pulse Overflow Alarm at Servo ON	When the servo turns ON, the position error pulses exceeded the parameter setting (Pn526).	DB stop	Available	
A.d02	Position Error Pulse Overflow Alarm by Speed Limit at Servo ON	If the servo turns ON with position error pulses accumulated, the speed is limited by Pn529. In this state, the reference pulse was input without resetting the speed limit, and the position error pulses exceeds the value set for the parameter Pn520.	Zero speed stop	Available	
A.d10	Motor-Load Position Error Pulse Overflow	Position error pulse between motor and load is too large.	Zero speed stop	Available	
A.E00	COM Alarm 0	SERVOPACK "COM error 0."	Zero speed stop	Available	
A.E01	COM Alarm 1	SERVOPACK "COM error 1."	Zero speed stop	Available	
A.E02	COM Alarm 2	SERVOPACK "COM error 2."	Zero speed stop	Available	
A.E07	COM Alarm 7	SERVOPACK "COM error 7."	Zero speed stop	N/A	H
A.E40	MECHATROLINK II Transmission Cycle Setting Error	Transmission cycle setting of MECHATROLINK II is incorrect.	Zero speed stop	Available	
A.E50	MECHATROLINK II Synchronization Error	Synchronization error during MECHATROLINK II communications.	Zero speed stop	Available	
A.E51	MECHATOLINK II Synchronization Failed	Synchronization error during MECHATROLINK II communications.			
A.E60	MECHATROLINK II Communications Error	Continuous communications error during MECHATROLINK II communications.	Zero speed stop	Available	
A.E61	MECHATROLINK II Transmission Cycle Error	Transmission cycle error during MECHATROLINK II communications.	Zero speed stop	Available	
A.EA0	DRV Alarm 0	SERVOPACK "DRV error 0."	DB stop	N/A	
A.EA1	DRV Alarm 1	SERVOPACK "DRV error 1."	DB stop	N/A	
A.EA2	DRV Alarm 2	SERVOPACK "DRV error 2."	Zero speed stop	Available	
A.ED0	Internal Command Error	Command error in the SERVOPACK.	Zero speed stop	Available	
A.F10	Power Line Open Phase	One phase is not connected in the main power supply.	Zero speed stop	Available	
CPF00	Digital Operator Transmission Error	Digital operator (JUSP-OP05A) fails to communicate with SERVOPACK (e.g., CPU error).	–	N/A	
CPF01			–	N/A	
A.– –	Not an error	Normal operation status	–	–	L

上正科技有限公司
購買、維修 此手冊零組件
電話： 037-466333
Email: service@repairtw.com
Line id: @zzzz
www.repairtw.com

10.1.3 Warning Displays

Warning display, names, and meanings are shown in table 10.2.

Table 10.2 Warning Displays and Outputs

Warning Display	Warning Name	Meaning
A.900	Position Error Pulse Overflow	Position error pulse exceeded the parameter settings (Pn520×Pn51E/100).
A.901	Position Error Pulse Overflow at Servo ON	When the servo turns ON, the position error pulses exceeded the parameter setting (Pn526×Pn528/100).
A.910	Overload	This warning occurs before the overload alarms (A.710 or A.720) occur. If the warning is ignored and operation continues, an overload alarm may occur.
A.911	Vibration	Abnormal vibration at the motor speed was detected. The detection level is the same as A.520. Set whether to output an alarm or warning by "Vibration Detection Switch" of Pn310.
A.920	Regenerative Overload	This warning occurs before the regenerative overload alarm (A.320) occurs. If the warning is ignored and operation continues, a regenerative overload alarm may occur.
A.930	Absolute Encoder Battery Voltage Lowered	This warning occurs when the absolute encoder battery voltage is lowered. Continuing the operation in this status may cause an alarm.
A.941	Change of Parameters Requires Setting Validation	The change of the parameters can be validated only after turning the power ON from OFF.
A.94A	Data Setting Warning 1 (Parameter Number Error)	Incorrect command parameter number was set.
A.94B	Data Setting Warning 2 (Out of Range)	Command input data is out of range.
A.94C	Data Setting Warning 3 (Calculation Error)	Calculation error was detected.
A.94D	Data Setting Warning 4 (Parameter Size)	Data size does not match.
A.95A	Command Warning 1	Command was sent though command sending condition was not satisfied.
A.95B	Command Warning 2	Unsupported command was sent.
A.95C	Command Warning 3	Command condition is not satisfied for parameter settings.
A.95D	Command Warning 4	Command, especially latch command, interferes.
A.95E	Command Warning 5	Subcommand and main command interfere.
A.960	MECHATROLINK Communications Warning	Communications error occurred during MECHATROLINK communications.

上正科技有限公司
購買、維修 此手冊零組件
電話： 037-466733
Email: service@repairtw.com
Line id: @zzzz
www.repairtw.com

Note: 1. The following warnings are not detected when Pn008 = n.□1□□ (Does not Detect a Warning).

A.900, A.901, A.910, A.911, A.920, A.930, A.941

2. A.94□, A.95□, and A.96□ warnings are not detected depending on the warning check mask (Pn800.1) settings.
A.94□ and A.95□ warnings are detected for default settings.

10.1.4 Troubleshooting of Alarm and Warning

When an error occurs in SERVOPACKs, an alarm display such as A.□□ or warning display such as A.9□□ appears on the panel indicator. However, the display "A.--" is not an alarm. Refer to the following sections to identify the cause of an alarm and the action to be taken.

Contact your Yaskawa representative if the problem cannot be solved by the described corrective action.

(1) Alarm Display and Troubleshooting

Table 10.3 Alarm Display and Troubleshooting

Alarm Display	Alarm Name	Situation at Alarm Occurrence	Cause	Corrective Actions
A.020	Parameter Checksum Error 1	Occurred when the control power supply was turned ON.	The control power supply lowered and sometimes ranged from 30 VAC to 60 VAC.	Correct the power supply, and set Fn005 to initialize the parameter.
			The power supply was turned OFF while changing the parameter setting.	Set Fn005 to initialize the parameter and input the parameter again.
			The number of times that parameters were written exceeded the upper limit. For example, the parameter was changed every scan through the host controller.	Replace the SERVOPACK.
			The SERVOPACK EEPROM and the related circuit are faulty.	Replace the SERVOPACK.
A.021	Parameter Format Error	Occurred when the power was turned ON again after writing the parameter with the parameter copy function of the digital operator (JUSP-OP05A).	The model number of the SERVOPACK in the software being used for the SERVOPACK is old and not compatible with the current parameters.	Replace the SERVOPACK.
				Change the parameter settings to be compatible with the model number in the software being used for the SERVOPACK.
A.022	System Parameter Checksum Error 1	Occurred when the control power supply was turned ON.	The control power supply lowered and sometimes ranged from 30 VAC to 60 VAC.	Correct the power supply, and set Fn005 to initialize the parameter.
			The SERVOPACK EEPROM and the related circuit are faulty.	Replace the SERVOPACK.
A.023	Parameter Password Error	Occurred when the control power supply was turned ON.	A SERVOPACK board fault occurred.	Replace the SERVOPACK.
A.02A	Parameter Checksum Error 2	Occurred when the control power supply was turned ON.	The control power supply lowered and sometimes ranged from 30 VAC to 60 VAC.	Correct the power supply, and set Fn005 to initialize the parameter.
			The power supply was turned OFF while changing the parameter setting.	Set Fn005 to initialize the parameter and input the parameter again.
			The number of times that parameters were written exceeded the upper limit. For example, the parameter was changed every scan through the host controller.	Replace the SERVOPACK.
			The SERVOPACK EEPROM and the related circuit are faulty.	Replace the SERVOPACK.
A.02b	System Parameter Checksum Error 2	Occurred when the control power supply was turned ON.	The control power supply lowered and sometimes ranged from 30 VAC to 60 VAC.	Correct the power supply, and set Fn005 to initialize the parameter.
			The SERVOPACK EEPROM and the related circuit are faulty.	Replace the SERVOPACK.
A.030	Main Circuit Detector Error	Occurred when the control power supply was turned ON or during operation	A SERVOPACK fault occurred.	Replace the SERVOPACK.
A.040	Parameter Setting Error 1	Occurred when the control power supply was turned ON.	Parameter is set out of range.	Set the parameter within the specified range.
			The SERVOPACK EEPROM and the related circuit are faulty.	Replace the SERVOPACK.
A.04A	Parameter Setting Error 2	Occurred when the control power supply was turned ON.	Parameter is set out of range.	Set the parameter within the specified range.
			The SERVOPACK EEPROM and the related circuit are faulty.	Replace the SERVOPACK.

上正科技有限公司
購買、維修 此手冊零組件
電話： 037-466333
Email: service@repairtw.com
Line id: @zzzz
www.repairtw.com

Table 10.3 Alarm Display and Troubleshooting (Cont'd)

Alarm Display	Alarm Name	Situation at Alarm Occurrence	Cause	Corrective Actions
A.041	Dividing Pulse Output Setting Error	Occurred when the control power supply was turned ON.	The PC dividing pulse set for Pn212 is out of the setting range and does not satisfy the setting conditions.	Set Pn212 to the correct value.
A.042	Multiple Parameter Combinations Exceeding Set Range	Occurred when the power was turned ON again after changing electronic gear ratio (Pn20E/Pn210) or changing the motor to the one with different number of encoder pulses.	Speed of program JOB operation (Fn004) is out of range by changing electronic gear ratio (Pn20E/Pn210) or motor.	Reduce electronic gear ratio (Pn20E/Pn210).
		Occurred when program JOG movement speed (Pn533) is changed.	Speed of program JOB operation (Fn004) is out of range by changing program JOG movement speed (Pn533).	Increase program JOG movement speed (Pn533).
		Occurred when attempting to execute advanced autotuning (F017) after changing electronic gear ratio (Pn20E/Pn210) or changing the motor to the one with different number of encoder pulses.	Movement speed of advanced autotuning is out of range by changing electronic gear ratio (Pn20E/Pn210) or motor.	Reduce electronic gear ratio (Pn20E/Pn210).
A.050	Combination Error	Occurred when the control power supply was turned ON.	The SERVOPACK and servomotor capacities do not correspond to each other. Servomotor capacity / SERVOPACK capacity ≤ 1/4 or servomotor capacity / SERVOPACK capacity ≥ 4	Select the proper combination of SERVOPACK and servomotor capacities.
			The parameter that is written in the encoder is incorrect.	Replace the servomotor (encoder).
			A SERVOPACK board fault occurred.	Replace the SERVOPACK.

上正科技有限公司
購買、維修 此手冊零組件
電話： 037-466333
Email: service@epsinfo.com
Line id: @zzz
http://www.epsinfo.com

Table 10.3 Alarm Display and Troubleshooting (Cont'd)

Alarm Display	Alarm Name	Situation at Alarm Occurrence	Cause	Corrective Actions
A.100	Overcurrent (Heat Sink Overheated)	Occurred when the control power supply was turned ON.	The overload alarm has been reset by turning OFF the power too many times.	Change the method to reset the alarm.
			The connection is faulty between the SERVOPACK board and the thermostat switch.	Replace the SERVOPACK.
			The SERVOPACK board fault occurred.	Replace the SERVOPACK.
		Occurred when the main circuit power supply was turned ON or when an overcurrent occurred while the servomotor was running.	The connection between grounding and U, V, or W is incorrect.	Check and then correct the wiring.
			The grounding line has contact with other terminals.	Check and then correct the wiring.
			A short circuit occurred between the grounding and U, V, or W of the servomotor cable.	Repair or replace the servomotor cable.
			A short circuit occurred between phase U, V, or W of the servomotor.	Repair or replace the servomotor cable.
			The wiring of the regenerative resistor is incorrect.	Check and then correct the wiring.
			A short circuit occurred between the grounding and U, V, or W of the SERVOPACK.	Replace the SERVOPACK.
			A SERVOPACK fault occurred (current feedback circuit, power transistor or board fault).	Replace the SERVOPACK.
			A short circuit occurred between the grounding and U, V, W of the servomotor.	Replace the servomotor.
			A short circuit occurred between the grounding and U, V, W of the servomotor.	Replace the servomotor.
			A fault occurred in the dynamic brake circuit.	Replace the SERVOPACK, and reduce the load, or reduce the number of rotations used.
			The dynamic brake was activated too frequently, so a DB overload alarm occurred.	Replace the SERVOPACK, and reduce the DB operation frequency.
			The overload alarm has been reset by turning OFF the power too many times.	Change the method to reset the alarm.
			The overload or regenerative power exceeds the regenerative resistor's capacity.	Reconsider the load and operation conditions.
			The direction or the distance of the SERVOPACK to other devices is incorrect. Heat radiation of the panel or heat around the panel occurred.	The ambient temperature for the SERVOPACK must be 55°C or less.
			A SERVOPACK fan fault occurred.	Replace the SERVOPACK.
			A SERVOPACK fault occurred.	Replace the SERVOPACK.
A.300	Regeneration Error Detected	Occurred when the control power supply was turned ON	A SERVOPACK board fault occurred.	Replace the SERVOPACK.
		Occurred when the main circuit power supply turned ON.	Pn600 is set to a value other than "0" for a servomotor of 400 W or less, and an external regenerative resistor is not connected.	Connect an external regenerative resistor, or set Pn600 to "0" if an external regenerative resistor is not connected.
			Check for incorrect wiring or a disconnected wire in the regenerative resistor.	Correct the wiring for the external regenerative resistor.
			A SERVOPACK fault occurred, such as regenerative transistor or a voltage sensor fault.	Replace the SERVOPACK.
		Occurred during normal operation	Check for incorrect wiring and disconnection of the regenerative resistor.	Correct the wiring for the external regenerative resistor.
			The jumper between B2 and B3 is removed for a servomotor of 500 W or more.	Correct the wiring.
			The regenerative resistor is disconnected, so the regenerative energy became excessive.	Replace the regenerative resistor or replace the SERVOPACK. Reconsider the load and operation conditions.
			A SERVOPACK fault, such as regenerative transistor and voltage sensor fault, occurred.	Replace the SERVOPACK.

上林科技有限公司
購買、維修、此手冊零組件
電話：037-466333
Email：service@repairtw.com
Line ID：@777
www.repairtw.com

Table 10.3 Alarm Display and Troubleshooting (Cont'd)

Alarm Display	Alarm Name	Situation at Alarm Occurrence	Cause	Corrective Actions
A.320	Regenerative Overload	Occurred when the control power supply was turned ON.	A SERVOPACK board fault occurred.	Replace the SERVOPACK.
		Occurred when the main circuit power supply was turned ON	The power supply voltage is 270 V or more.	Correct the input voltage.
		Occurred during normal operation (large increase of regenerative resistor temperature)	The regenerative energy is excessive.	Select a proper regenerative resistance capacity, or reconsider the load and operation conditions.
			The regenerating state continued.	
		Occurred during normal operation (small increase of regenerative resistor temperature)	The setting of parameter Pn600 is smaller than the external regenerative resistor's capacity.	Correct the set value of parameter Pn600.
			A SERVOPACK fault occurred.	Replace the SERVOPACK.
		Occurred at servomotor deceleration	The regenerative energy is excessive.	Select a proper regenerative resistance capacity, or reconsider the load and operation conditions.
A.330	Main Circuit Wiring Error	Occurred when the control power supply was turned ON.	A SERVOPACK board fault occurred.	Replace the SERVOPACK.
		Occurred when the main circuit power supply was turned ON.	In the DC power input mode, AC power is supplied through L1 and L2 or L1, L2, and L3.	For AC power input, Pn001.2=0. For DC power input, Pn001.2=1.
			In the AC power input mode, DC power is supplied through B1/ ⊕ and ⊖ terminals.	
			Pn600 is set to 0 if the regenerative resistance is disconnected.	Set Pn600 to 0.
A.400	Overvoltage	Occurred when the control power supply was turned ON.	A SERVOPACK board fault occurred.	Replace the SERVOPACK.
		Occurred when the main circuit power supply was turned ON.	The AC power voltage is 290 V or more.	The AC power voltage must be within the specified range.
			A SERVOPACK fault occurred.	Replace the SERVOPACK.
		Occurred during normal operation.	Check the AC power voltage (check if there is no excessive voltage change.)	The AC power voltage must be within the specified range.
			The motor speed is high and load moment of inertia is excessive, resulting in insufficient regenerative capacity.	Check the load moment of inertia and minus load specifications. Reconsider the load and operation conditions.
			A SERVOPACK fault occurred.	Replace the SERVOPACK.
		Occurred at servomotor deceleration.	The motor speed is high, and the load moment of inertia is excessive.	Reconsider the load and operation conditions.

上正科技有限公司
購買、維修 此手冊零組件
電話 0921-8811-33
Email service@repairtw.com
Line ID @zzzz
www.repairtw.com

Table 10.3 Alarm Display and Troubleshooting (Cont'd)

Alarm Display	Alarm Name	Situation at Alarm Occurrence	Cause	Corrective Actions
A.410	Undervoltage	Occurred when the control power supply was turned ON.	A SERVOPACK board fault occurred.	Replace the SERVOPACK.
		Occurred when the main circuit power supply was turned ON.	The AC power supply voltage is 120 V or less.	The AC power supply voltage must be within the specified range.
			The fuse of the SERVOPACK is blown out.	Replace the SERVOPACK.
			The inrush current limit resistor is disconnected, and result in an abnormal power supply voltage or in an overload of the inrush current limit resistor.	Replace the SERVOPACK. Check the power supply voltage, and reduce the number of times that the main circuit is turned ON or OFF.)
			A SERVOPACK fault occurred.	Replace the SERVOPACK.
		Occurred during normal operation.	The AC power supply voltage was lowered, and large voltage drop occurred.	The AC power supply voltage must be within the specified range.
			A temporary power failure occurred.	Clear and reset the alarm, and restart the operation.
			The servomotor cable shorts to ground.	Repair or replace the servomotor cable.
			The servomotor shorts to ground.	Replace the servomotor.
			A SERVOPACK fault occurred.	Replace the SERVOPACK.
A.510	Overspeed	Occurred when the control power supply was turned ON.	A SERVOPACK board fault occurred.	Replace the SERVOPACK.
		Occurred when servo was ON.	The order of phases U, V, and W in the servomotor wiring is incorrect.	Correct the servomotor wiring.
			The encoder wiring is incorrect.	Correct the encoder wiring.
			Malfunction occurred due to noise interference in the encoder wiring.	Take measures against noise for the encoder wiring.
			A SERVOPACK fault occurred.	Replace the SERVOPACK.
		Occurred when the servomotor started running or in a high speed run.	The order of phases U, V, and W in the servomotor wiring is incorrect.	Correct the servomotor wiring.
			The encoder wiring is incorrect.	Correct the encoder wiring.
			Malfunction occurred due to noise interference in the encoder wiring.	Take measures against noise for the encoder wiring.
			The position or speed reference input is too large.	Reduce the reference value.
			The setting of the reference input gain is incorrect.	Correct the reference input gain setting.
			A SERVOPACK board fault occurred.	Replace the SERVOPACK.
A.511	Dividing Pulse Output Overspeed	Occurred while the servomotor was running.	The output frequency of the dividing pulse exceeds 1.6 MHz.	Lower the setting of the PG dividing pulse (Pn212).
				Reduce the servomotor speed.
A.520	Vibration Alarm	Occurred while the servomotor was running.	Abnormal vibration was detected.	Reduce the servomotor speed.
				Reduce the speed loop gain (Pn100).
A.710	Overload: Momentary Overload	Occurred when the control power supply was turned ON.	A SERVOPACK board fault occurred.	Replace the SERVOPACK.
		Occurred when the servo was turned ON.	The servomotor wiring is incorrect or the connection is faulty.	Correct the servomotor wiring.

上正科技有限公司
購買、維修此手冊零組件
電話：03-7466343
Email：service@repairtw.com
Line Id：@3zzzz
www.repairtw.com

Table 10.3 Alarm Display and Troubleshooting (Cont'd)

Alarm Display	Alarm Name	Situation at Alarm Occurrence	Cause	Corrective Actions
A.720	Overload: Continuous Overload	Occurred when the servo was turned ON.	The encoder wiring is incorrect or the connection is faulty.	Correct the encoder wiring.
			A SERVOPACK fault occurred.	Replace the SERVOPACK.
		Occurred when the servomotor did not run by the reference input.	The servomotor wiring is incorrect or the connection is faulty.	Correct the servomotor wiring.
			The encoder wiring is incorrect or the connection is faulty.	Correct the encoder wiring.
			The starting torque exceeds the maximum torque.	Reconsider the load and operation conditions, or reconsider the servomotor capacity.
			A SERVOPACK fault occurred.	Replace the SERVOPACK.
		Occurred during normal operation.	The actual torque exceeds the rated torque or the starting torque largely exceeds the rated torque.	Reconsider the load and operation conditions, or reconsider the servomotor capacity.
			A SERVOPACK fault occurred.	Replace the SERVOPACK.
A.730	Dynamic Brake Overload	Occurred when the control power supply was turned ON.	A SERVOPACK board fault occurred.	Replace the SERVOPACK.
		Occurred when the servomotor was running and in a status other than servo OFF.	A SERVOPACK board fault occurred.	Replace the SERVOPACK.
		Occurred when the servomotor was running in servo OFF status.	The rotating energy at a DB stop exceeds the DB resistance capacity.	①Reduce the motor speed, ②Reduce the load moment of inertia, or ③Reduce the number of times of the DB stop operation.
			A SERVOPACK fault occurred.	Replace the SERVOPACK.
A.740	Overload of Surge Current Limit Resistor	Occurred when the control power supply was turned ON.	A SERVOPACK board fault occurred.	Replace the SERVOPACK.
		Occurred during operations other than the turning ON/OFF of the main circuit.	A SERVOPACK board fault occurred.	Replace the SERVOPACK.
		Occurred at the main circuit power supply ON/OFF operation.	The inrush current limit resistor operation frequency at the main circuit power supply ON/OF operation exceeds the allowable range.	Reduce the number of times that main circuit's power supply can be turned ON/OFF to 5 times/ min. or less.
			A SERVOPACK fault occurred.	Replace the SERVOPACK.
A.7A0	Heat Sink Overheated	Occurred when the control power supply was turned ON	A SERVOPACK fault occurred.	Replace the SERVOPACK.
			The overload alarm has been reset by turning OFF the power too many times.	Change the method to reset the alarm.
		Occurred when the main circuit power supply was turned ON or while the servomotor was running.	The load exceeds the rated load.	Reconsider the load and operation conditions, or reconsider the servomotor capacity.
			The SERVOPACK ambient temperature exceeds 55°C.	The ambient temperature must be 55°C or less.
			A SERVOPACK fault occurred.	Replace the SERVOPACK.
			The overload alarm has been reset by turning OFF the power too many times.	Change the method to reset the alarm.
			The connection of the SERVOPACK board and the thermostat switch is incorrect.	Replace the SERVOPACK.
			The overload or regenerative energy exceeds the resistor capacity.	Reconsider the load and operation conditions.
			The SERVOPACK (direction and distance to the peripheral devices) is mounted incorrectly. Heat radiation from the panel or heat around the SERVOPACK)	The ambient temperature for SERVOPACK must be 55°C or less.
			A SERVOPACK fan fault occurred.	Replace the SERVOPACK.

上正科技有限公司
購買 維修 此手冊零組件
電話： 037-466333
Email: service@repairtw.com
Line id: @zzzz
www.repairtw.com

Table 10.3 Alarm Display and Troubleshooting (Cont'd)

Alarm Display	Alarm Name	Situation at Alarm Occurrence	Cause	Corrective Actions
A.810	Encoder Backup Error	Occurred when the control power supply was turned ON. (Setting: Pn002.2=1)	A SERVOPACK board fault occurred when an absolute encoder is used with the setting for incremental encoder.	Replace the SERVOPACK.
		Occurred when the control power supply was turned ON using an absolute encoder. (Setting: Pn002.2=0)	Alarm occurred when the power to the absolute encoder was initially turned ON.	Set up the encoder.
			The encoder cable had been disconnected once.	First confirm the connection and set up the encoder.
			The power from both the PG power supply (+5 V) and the battery power supply from the SERVOPACK is not being supplied.	Replace the battery or take similar measures to supply power to the encoder, and set up the encoder.
			An absolute encoder fault occurred.	If the alarm cannot be a reset by setting up the encoder again.
			A SERVOPACK fault occurred.	Replace the SERVOPACK.
A.820	Encoder Checksum Error	Occurred when the control power supply was turned ON or during operation	A fault occurred in the encoder and was detected by encoder self-diagnosis.	Set up the encoder. If this alarm occurs frequently, replace the servomotor.
			A SERVOPACK fault occurred.	Replace the SERVOPACK.
		Occurred when Sensor ON (SENS_ON) command was sent.	A fault occurred in the encoder and was detected by encoder self-diagnosis.	Set up the encoder. If this alarm occurs frequently, replace the servomotor.
A.830	Absolute Encoder Battery Error	When the control power supply was turned ON. (Setting: Pn002.2=1)	When the absolute encoder was used as an incremental, a SERVOPACK board fault occurred.	Replace the SERVOPACK.
		When the control power supply was turned ON using an absolute encoder. (Setting: Pn002.2=0)	The battery connection is incorrect.	Reconnect the battery.
			The battery voltage is lower than the specified value 2.7 V.	Replace the battery, and then turn ON the power to the encoder.
			A SERVOPACK board fault occurred.	Replace the SERVOPACK.
A.840	Encoder Data Error	Occurred when the control power supply was turned ON.	A malfunction occurred in the encoder.	Turn the encoder power supply OFF and then ON again. If this alarm occurs frequently, replace the servomotor.
			A SERVOPACK board fault occurred.	Replace the SERVOPACK.
		Occurred during operation.	A malfunction occurred in the encoder.	Correct the wiring around the encoder by separating the encoder cable from the power line, or by checking the grounding and other wiring.)
			An encoder fault occurred.	If this alarm occurs frequently, replace the servomotor.
			A SERVOPACK board fault occurred.	Replace the SERVOPACK.
A.850	Encoder Overspeed	Occurred when the control power supply was turned ON.	When the encoder power supply turns ON and the SEN signal is ON when using an absolute encoder, the servomotor runs at 200 RPM or more.	Turn ON the encoder power supply when the servomotor runs at a speed less than 200 RPM.
			An encoder fault occurred.	Replace the servomotor.
			A SERVOPACK board fault occurred.	Replace the SERVOPACK.
		Occurred during operation.	An encoder fault occurred.	Replace the servomotor.
			A SERVOPACK board fault occurred.	Replace the SERVOPACK.

上市科技有限公司
購買、維修 此手冊零組件
電話: 03-466233
Email: service@repairtw.com
Line Id: @zzzz
www.repairtw.com

Table 10.3 Alarm Display and Troubleshooting (Cont'd)

Alarm Display	Alarm Name	Situation at Alarm Occurrence	Cause	Corrective Actions
A.860	Encoder Overheated	Occurred when the control power supply was turned ON.	An encoder fault occurred.	Replace the servomotor.
			A SERVOPACK board fault occurred.	Replace the SERVOPACK.
		Occurred during operation.	The ambient temperature around the servomotor is too high.	The ambient temperature must be 40°C or less.
			The servomotor load is greater than the rated load.	The servomotor load must be within the specified range.
			An encoder fault occurred.	Replace the servomotor.
			A SERVOPACK board fault occurred.	Replace the SERVOPACK.
A.870	Fully-closed Serial Encoder Checksum Alarm	Occurred when the control power supply was turned ON or during operation.	A serial converter unit fault occurred and was detected by self-diagnosis of serial converter unit.	Set up the serial converter unit. If this alarm occurs frequently, replace the serial converter unit.
			A SERVOPACK fault occurred.	Replace the SERVOPACK.
		Occurred when Sensor ON (SENS_ON) command was issued.	A serial converter unit fault occurred and was detected by self-diagnosis of serial converter unit.	Set up the serial converter unit. If this alarm occurs frequently, replace the serial converter unit.
A.880	Fully-closed Serial Encoder Data Alarm	Occurred when the control power supply was turned ON.	A serial converter unit malfunctioned.	Turn the SERVOPACK and serial converter unit power supplies OFF and then ON again. If this alarm occurs frequently, replace the serial converter unit.
			A SERVOPACK fault occurred.	Replace the SERVOPACK.
		Occurred during operation.	A serial converter unit malfunctioned.	Turn the SERVOPACK and serial converter unit power supplies OFF and then ON again. If this alarm occurs frequently, replace the serial converter unit.
			A serial converter unit fault occurred.	Replace the serial converter unit.
			A SERVOPACK fault occurred.	Replace the SERVOPACK.
A.8A0	Fully-closed Serial Encoder Scale Error	Occurred when the control power supply was turned ON or during operation.	A linear encoder fault occurred.	Replace the linear encoder.
A.8A1	Fully-closed Serial Encoder Module Error	Occurred when the control power supply was turned ON or during operation.	A linear encoder fault occurred.	Replace the linear encoder.
			A scale converter unit fault occurred.	Replace the serial converter unit.
A.8A2	Fully-closed Serial Encoder Sensor Error (Incremental)	Occurred when the control power supply was turned ON or during operation.	A linear encoder fault occurred.	Replace the linear encoder.
A.b31	Current Detection Error 1	Occurred when the control power supply was turned ON or during operation.	The current detection circuit for the Phase U is faulty.	Replace the SERVOPACK.
A.b32	Current Detection Error 2		The current detection circuit for the Phase V is faulty.	
A.b33	Current Detection Error 3		The detection circuit for the power supply is faulty.	Replace the SERVOPACK.
			The servomotor cable is disconnected.	Check the motor wiring.

上正科技有限公司
購買、維修、此手冊零組件
電話： 037-466333
Email: service@repairtw.com
Line id: @xxx
www.repairtw.com

Table 10.3 Alarm Display and Troubleshooting (Cont'd)

Alarm Display	Alarm Name	Situation at Alarm Occurrence	Cause	Corrective Actions
A.bF0	System Alarm 0	Occurred when the control power supply was turned ON.	A SERVOPACK board fault occurred.	Replace the SERVOPACK.
A.bF1	System Alarm 1			
A.bF2	System Alarm 2		A SERVOPACK board fault occurred.	
A.bF3	System Alarm 3			
A.bF4	System Alarm 4			
A.C10	Servo Overrun Detected	Occurred when the control power supply was turned ON.	A SERVOPACK board fault occurred.	Replace the SERVOPACK.
		Occurred when the servo was ON or a reference was input.	The order of phase-U, -V, and -W in the servomotor wiring is incorrect.	Correct the servomotor wiring.
			An encoder fault occurred.	Replace the servomotor.
			A SERVOPACK fault occurred.	Replace the SERVOPACK.
A.C80	Absolute Encoder Clear Error and Multi-turn Limit Setting Error	Occurred when the control power supply was turned ON.	An encoder fault occurred.	Replace the servomotor.
			A SERVOPACK board fault occurred.	Replace the SERVOPACK.
		Occurred when an encoder alarm was cleared and reset.	An encoder fault occurred.	Replace the servomotor.
			A SERVOPACK board fault occurred.	Replace the SERVOPACK.
A.C90	Encoder Communications Error	Occurred when the control power supply was turned ON or during operation.	The encoder wiring and the contact are incorrect.	Correct the encoder wiring.
			Noise interference occurred due to incorrect encoder cable specifications.	Use tinned annealed copper twisted-pair or twisted-pair shielded wire with a core of at least 0.12 mm^2 (0.0002 in^2).
			Noise interference occurred because the wiring distance for the encoder cable is too long.	The wiring distance must be 20m (65.6 ft) max.
A.C91	Encoder Communications Position Data Error		The noise interference occurred on the signal line because the encoder cable is bent and the sheath is damaged.	Correct the encoder cable layout.
			The encoder cable is bundled with a high-current line or near a high-current line.	Correct the encoder cable layout so that no surge is applied.
			The FG varies because of the influence from machines on the servomotor side, such as welder.	Make the grounding for the machine separately from PG side FG.
A.C92	Encoder Communications Timer Error		Noise interference occurred on the signal line from the encoder.	Take a measure against noise for the encoder wiring.
			Excessive vibration and shocks were applied to the encoder.	Reduce the machine vibration or mount the servomotor securely.
			An encoder fault occurred.	Replace the servomotor.
			A SERVOPACK board fault occurred.	Replace the SERVOPACK.
A.CA0	Encoder Parameter Error	Occurred when the control power supply was turned ON.	An encoder fault occurred.	Replace the servomotor.
			A SERVOPACK board fault occurred.	Replace the SERVOPACK.

上正科技有限公司
購買、維修、庫存零組件
電話： 037-466333
Email: service@repairtw.com
Line Id: @777
www.repairtw.com

Table 10.3 Alarm Display and Troubleshooting (Cont'd)

Alarm Display	Alarm Name	Situation at Alarm Occurrence	Cause	Corrective Actions
A.Cb0	Encoder Echoback Error	Occurred when the control power supply was turned ON or during operation.	The encoder wiring and contact are incorrect.	Correct the encoder wiring.
			Noise interference occurred due to incorrect encoder cable specifications.	Use tinned annealed copper twisted-pair or twisted-pair shielded wire with a core of at least 0.12 mm^2 (0.0002 in^2).
			Noise interference occurred because the wiring distance for the encoder cable is too long.	The wiring distance must be 20m (65.6 ft) max.
			Noise interference occurred on the signal line, because the encoder cable is bent and the sheath is damaged.	Correct the encoder cable layout.
			The encoder cable is bundled with a high-current line or near a high-current line.	Correct the encoder cable layout so that no surge is applied.
			The FG varies because of the influence from the servomotor side machines, such as welder.	Ground the machine separately from PG side FG.
			Noise interference occurred on the signal line from the encoder.	Take measures against noise for the encoder wiring.
			Excessive vibration and shocks to the encoder was applied.	Reduce the machine vibration or mount the servomotor securely.
			An encoder fault occurred.	Replace the servomotor.
			A SERVOPACK board fault occurred.	Replace the SERVOPACK.
A.CC0	Multi-turn Limit Disagreement	Occurred when the control power supply was turned ON.	The parameter settings for the SERVOPACK are incorrect.	Correct the setting of Pn205 (0 to 65535).
			The multi-turn limit value for the encoder is not set or was changed.	Execute Fn013 at the occurrence of alarm.
		Occurred during operation.	A SERVOPACK board fault occurred.	Replace the SERVOPACK.
A.CF1	Fully-closed Serial Converter Unit Communications Error (Reception Error)	Occurred when the control power supply was turned ON or during operation.	Wiring of cable between serial converter unit and SERVOPACK is incorrect or faulty contact.	Correct the cable wiring.
			The specified cable is not used between serial converter unit and SERVOPACK.	Use the specified cable.
			Cable between serial converter unit and SERVOPACK is too long.	Use 20-m cable max.
			Sheath of cable between serial converter unit and SERVOPACK is broken.	Replace the cable.
A.CF2	Fully-closed Serial Converter Unit Communications Error (Timer Stopped)		Noise interferes with the cable between serial converter unit and SERVOPACK.	Correct the wiring around serial converter unit, e.g., separating signal line from power line or grounding.
			A serial converter unit fault occurred.	Replace the serial converter unit.
			A SERVOPACK fault occurred.	Replace the SERVOPACK.
A.d00	Position Error Pulse Overflow	Occurred when the control power supply was turned ON.	A SERVOPACK board fault occurred.	Replace the SERVOPACK.
		Occurred at the servomotor high-speed operation.	The contact in the servomotor U, V, and W wirings is faulty.	Correct the servomotor wiring.
				Correct the encoder wiring.
			A SERVOPACK board fault occurred.	Replace the SERVOPACK.
		The servomotor did not run with position reference input.	Wirings of the servomotor U, V, and W are incorrect.	Correct the servomotor wiring.
			A SERVOPACK board fault occurred.	Replace the SERVOPACK.
		Normal movement, but occurred with a long distance reference input.	The SERVOPACK gain adjustment is improper.	Increase the speed loop gain (Pn100) and position loop gain (Pn102).
			The position reference pulse frequency is too high.	Adjust slowly the position reference pulse frequency.
				Apply the smoothing function.
				Correct the electronic gear ratio.
			Setting of the parameter Pn520 (Position Error Pulse Overflow Alarm Level) is incorrect.	Set the parameter Pn520 to proper value.
			The servomotor specifications do not meet the load conditions such as torque and moment of inertia.	Reconsider and correct the load and servomotor capacity.

上正科技有限公司
購買、維修、此手冊零組件
電話： 037-466333
Email: service@repairtw.com
Line Id: @3333
www.repairtw.com

Table 10.3 Alarm Display and Troubleshooting (Cont'd)

Alarm Display	Alarm Name	Situation at Alarm Occurrence	Cause	Corrective Actions
A.d01	Position Error Pulse Overflow Alarm at Servo ON	Occurred when the control power supply was turned ON.	• Excessive position errors accumulated while the servo is OFF • With the setting not to clear the errors while the servo is OFF, the servomotor was running.	Do not run the servomotor in servo OFF status.
				Make the setting so that the errors are cleared while the servo is OFF.
				Adjust the detection level.
A.d02	Position Error Pulse Overflow Alarm by Speed Limit at Servo ON	Occurred when the servomotor was running.	The servo turned ON with accumulated errors, and reference pulse was input during operation at the speed limit, therefore, the errors exceeded the Position Error Pulse Overflow Alarm Level (Pn520).	Do not run the servomotor in servo OFF status.
				Make the setting so that the errors are cleared while the servo is OFF.
				Correct the detection level.
				Adjust the speed limit level (Pn529) when servo turns ON.
A.d10	Motor-Load Position Error Pulse Overflow	Occurred when servo was ON or during operation.	Motor rotation direction and scale installation direction is opposite.	Install the scale in the opposite direction, or reverse the setting of fully-closed encoder usage method (Pn002.3).
			Position of the load such as stage and scale joint installation are incorrect.	Check the mechanical joint.
A.E00	COM Alarm 0	Occurred when the control power supply was turned ON.	A SERVOPACK fault occurred.	Replace the SERVOPACK.
A.E01	COM Alarm 1			
A.E02	COM Alarm 2			
A.E07	COM Alarm 7			
A.E40	MECHATROLINK II Transmission Cycle Setting Error	Occurred at MECHATROLINK II communications start.	Setting of MECHATROLINK II transmission cycle is out of specifications range.	Set the transmission cycle to proper value.
A.E50	MECHATROLINK II Synchronization Error	Occurred during MECHATROLINK II communications.	WDT data of host controller was not updated correctly.	Update the WDT data at the host controller correctly.
			A SERVOPACK fault occurred.	Replace the SERVOPACK.
A.E51	MECHATROLINK II Synchronization Failed	Occurred at MECHATROLINK II synchronization communications start.	WDT data of host controller was not updated correctly at the synchronization communications start, and synchronization communications could not start.	Update the WDT data at the host controller correctly.
			A SERVOPACK fault occurred.	Replace the SERVOPACK.
A.E60	MECHATROLINK II Communications Error	Occurred during MECHATROLINK II communications.	MECHATROLINK II wiring is incorrect.	Correct the MECHATROLINK II wiring.
			A SERVOPACK fault occurred.	Replace the SERVOPACK.
			MECHATROLINK II data reception error occurred due to noise interference.	Take measures against noise. Check the MECHATROLINK II communications cable and FG wiring and take measures such as adding ferrite core on the MECHATROLINK II communications cable.
A.E61	MECHATROLINK II Transmission Cycle Error	Occurred during MECHATROLINK II communications.	MECHATROLINK II transmission cycle fluctuated.	Remove the cause of transmission cycle fluctuation at host controller.
			A SERVOPACK fault occurred.	Replace the SERVOPACK.
A.EA0	DRV Alarm 0	Occurred when the control power supply was turned ON or during operation.	A SERVOPACK fault occurred.	Replace the SERVOPACK.
A.EA1	DRV Alarm 1			
A.EA2	DRV Alarm 2			
A.ED0	Internal Command Error	Occurred at MECHATROLINK II communications start or during operation.	Parameter was changed by the digital operator or the personal computer during MECHATROLINK II communications.	Stop changing parameter using digital operator and do not connect the personal computer during MECHATROLINK II communications.
			A SERVOPACK fault occurred.	Replace the SERVOPACK.

上揚數位公司
購買、維修 此手冊零組件
電話： 037-466333
Email: service@repairtw.com
Line id: @zzzz
www.repairtw.com

Table 10.3 Alarm Display and Troubleshooting (Cont'd)

Alarm Display	Alarm Name	Situation at Alarm Occurrence	Cause	Corrective Actions
A.F10	Power Line Open Phase	Occurred when the control power supply was turned ON.	A SERVOPACK fault occurred.	Replace the SERVOPACK.
		Occurred when the main circuit power supply was turned ON.	The three-phase power supply wiring is incorrect.	Correct the power supply wiring.
			The three-phase power supply is unbalanced.	Balance the power supply by changing phases.
			A SERVOPACK fault occurred.	Replace the SERVOPACK.
		Occurred when the servomotor was running.	The contact in three-phase power supply wiring is faulty.	Correct the power supply wiring.
			Three-phase power supply is unbalanced.	Balance the power supply.
			A SERVOPACK fault occurred.	Replace the SERVOPACK.
CPF00	Digital Operator Transmission Error 1 *1	Occurred when the power supply was turned ON with digital operator connected or when connecting digital operator with the power supply was turned ON.	The contact between the digital operator and the SERVOPACK is faulty.	Insert securely the connector, or replace the cable.
			The external noise interference occurred to the digital operator or cable is faulty. (The digital operator cable is near noise source)	Do not lay the cable near noise source.
				Install digital operator far from noise source.
CPF01	Digital Operator Transmission Error 2 *2		A digital operator fault occurred.	Replace the digital operator.
			A SERVOPACK fault occurred.	Replace the SERVOPACK.

* 1. This alarm occurs when the communications is still disabled five seconds after digital operator power supply is ON, or when digital operator communications disabled status stays while an option unit is connected.

* 2. This alarm occurs when digital operator received data error occurs consecutively five times, or when the state that digital operator receives no data from SERVOPACK for one second or more occurs consecutively three times.

上正科技有限公司
購買、維修 此手冊零組件
電話： 037-466595
Email: service@repairtw.com
Line id: @zzzz
www.repairtw.com

(2) Warning Display and Troubleshooting

Table 10.4 Warning Display and Troubleshooting

Warning Display	Warning Name	Situation at Warning Occurrence	Cause	Corrective Actions
A.900	Position Error Pulse Overflow	Occurred during operation.	A SERVOPACK board fault occurred.	Replace the SERVOPACK.
			Wiring is incorrect or the contact of servomotor U, V, and W is faulty.	Correct the servomotor wiring.
				Correct the encoder wiring.
			The SERVOPACK gain adjustment is improper.	Increase the speed loop gain (Pn100) and position loop gain (Pn102).
			The position reference pulse frequency is too high.	Decrease slowly the position reference pulse frequency.
				Apply the smoothing function.
				Adjust the electronic gear ratio.
			Setting of the parameter Pn520 (Position Error Pulse Alarm Level) is improper.	Set the parameter Pn520 to a value other than “0”.
			The servomotor specifications do not meet the load conditions (torque, moment of inertia).	Reconsider and correct the load and servomotor capacity.
A.901	Position Error Pulse Overflow at Servo ON	Occurs when the servo was ON.	• Errors accumulated excessively in servo OFF status • With the setting not to clear the errors while the servo is OFF, the servomotor was running.	Do not run the servomotor in servo OFF status.
				Make the setting so that the errors are cleared in servo OFF status.
				Adjust the detection level.
A.910	Overload: Warning for the alarms A710 and A720	Occurs when the servo was ON.	Wiring is incorrect and the contact in servomotor wiring is faulty.	Correct the servomotor wiring.
			Wiring is incorrect and the contact in encoder wiring is faulty.	Correct the encoder wiring.
			A SERVOPACK fault occurred.	Replace the SERVOPACK.
		The servomotor did not run with a reference input.	Servomotor wiring is incorrect and the contact is faulty.	Correct the servomotor wiring.
			Encoder wiring is incorrect and the contact is faulty.	Correct the encoder wiring.
			The starting torque exceeds the maximum torque.	Reconsider the load and operation conditions. Or, check the servomotor capacity.
			A SERVOPACK fault occurred.	Replace the SERVOPACK.
		Occurred during operation.	The effective torque exceeds the rated torque.	Reconsider the load and operation conditions. Or, check the servomotor capacity.
			Temperature in the SERVOPACK panel is high.	Reduce the in-panel temperature to 55°C or less.
			A SERVOPACK fault occurred.	Replace the SERVOPACK.
A.911	Vibration	Occurred during normal operation.	Servo Amplifier gain is improper.	To adjust the gain, decrease the speed loop gain (Pn100) and position loop gain (Pn101), and increase the filter time constants such as torque reference filter (Pn401).

上正科技有限公司
購買、維修日系零組件
電話： 03-455333
Email: service@repairtw.com
Line id: @zzzz
www.repairtw.com

Table 10.4 Warning Display and Troubleshooting (Cont'd)

Warning Display	Warning Name	Situation at Warning Occurrence	Cause	Corrective Actions
A.920	Regenerative Overload: Warning for the alarm A320	Occurred when the control power supply was turned ON.	A SERVOPACK fault occurred.	Replace the SERVOPACK.
		Occurred during normal operation (Large increase of regenerative resistor temperature.)	Regenerative energy is excessive.	Check the regenerative resistor capacity, or reconsider the load and operation conditions.
			Regenerative status continues.	
		Occurred during normal operation (Small increase of regenerative resistor temperature).	The setting of parameter Pn600 is smaller than the external regenerative resistor capacity.	Correct the setting of parameter Pn600.
			A SERVOPACK fault occurred.	Replace the SERVOPACK.
		Occurred at servomotor deceleration.	Regenerative energy is excessive.	Check the regenerative resistor capacity, or reconsider the load and operation conditions.
A.930	Absolute Encoder Battery Warning	Occurred when the control power supply was turned ON (Setting: Pn002.2=1)	A SERVOPACK board fault occurred. (The absolute encoder is used in the incremental encoder setting.)	Replace the SERVOPACK.
		Occurred 4 seconds or more after the control power supply was turned ON (Setting: Pn002.2=0) When an absolute encoder was used	The battery connection is incorrect or faulty.	Connect correctly the battery.
			The battery voltage is lower than the specified value 2.7 V.	Replace the battery, and turn OFF the encoder power supply and ON again.
			A SERVOPACK board fault occurred.	Replace the SERVOPACK.
A.941	Change of Parameters Requires the Setting Validation	Occurred after having changed parameter setting.	To validate new setting of this parameter, turn OFF the power and ON again.	Turn OFF the power and ON again.
A.94A	Data Setting Warning 1	Occurred when PRM_RD, PRM_WR, or PPRM_WR command was sent.	Disabled parameter number was used.	Use the correct parameter number.
A.94B	Data Setting Warning 2	Occurred when MECHATROLINK II command was sent.	Attempted to send values outside the range to the command data.	Set the values within the range.
A.94C	Data Setting Warning 3 (Calculation Error)	Occurred when PRM_WR or PPRM_WR command was sent.	Calculation result of set value is incorrect.	Set the parameter within the range.
A.94D	Data Setting Warning 4	Occurred when PRM_RD, PRM_WR, or PPRM_WR command was sent.	Parameter size set in command is incorrect.	Use the correct parameter size.
A.95A	Command Warning 1	Occurred during MECHATROLINK II communications.	Command sending condition is not satisfied.	Send a command after command sending condition is satisfied.
A.95B	Command Warning 2	Occurred during MECHATROLINK II communications.	SERVOPACK received unsupported command.	Do not sent an unsupported command.
A.95C	Command Warning 3	Occurred during MECHATROLINK II communications.	MECHATROLINK II command cannot be executed due to parameter setting condition.	Set the parameter to execute the command.
A.95D	Command Warning 4	Occurred during MECHATROLINK II communications.	Command sending condition for latch-related commands is not satisfied.	Send a command after command sending condition related to latch command is satisfied.
A.95E	Command Warning 5	Occurred during MECHATROLINK II communications.	Subcommand sending condition is not satisfied.	Send a subcommand after command sending condition is satisfied.

上順科技有限公司
購買、維修、技術服務組件
電話： 037-466333
Email: service@repairtw.com
Line id: @zzzz
www.repairtw.com

10.1.5 Troubleshooting for Malfunction without Alarm Display

The troubleshooting for the malfunctions that causes no alarm display is listed below.
Contact your Yaskawa representative if the problem cannot be solved by the described corrective actions.

Table 10.5 Troubleshooting for Malfunction without Alarm Display

Symptom	Cause	Inspection	Corrective Actions
		■: Turn OFF the servo system before executing operations.	
Servomotor Does Not Start	The control power supply is not ON.	Check voltage between power supply terminals.	Correct the power circuit.
	The main circuit power supply is not ON.	Check the voltage between power supply terminals.	Correct the power circuit.
	Wrong wiring or disconnection of I/O signal connector CN1	Check if the connector CN1 is properly inserted and connected.	Correct the connector CN1 connection.
	Servomotor or encoder wiring disconnected.	Check the wiring.	Correct the wiring.
	Overloaded	Run under no load.	Reduce load or replace with larger capacity servomotor.
	Speed/position references not input	Check reference input pins.	Input speed/position references correctly.
	Setting for Pn50A to Pn50D “Input Signal Selection” is incorrect.	Check settings of parameters Pn50A to Pn50D.	Correct the settings for Pn50A to Pn50D “Input Signal Selection.”
	Encoder type differs from parameter setting.	Check incremental or absolute encoder.	Set parameter Pn002.2 to the encoder type being used.
	Servo ON (SV_ON) command is not sent.	Check the command sent from the host controller.	Send the Servo ON (SV_ON) command.
	Sensor ON (SENS_ON) command is not sent.	Check the command sent from the host controller.	Send the command in the correct SERVOPACK sequence.
	P-OT and N-OT inputs are turned OFF.	Check the overtravel input signal.	Turn the overtravel input signal ON.
	A SERVOPACK fault occurred.	A SERVOPACK board fault occurred.	Replace the SERVOPACK.
Servomotor Moves Instantaneously, and then Stops	Servomotor wiring is incorrect.	Check the servomotor wiring.	Correct the servomotor wiring.
	Encoder wiring is incorrect.	Check the encoder wiring.	Correct the encoder wiring.
Servomotor Speed Unstable	Wiring connection to motor is defective	Check connection of power lead (phases-U, -V, and -W) and encoder connectors.	Tighten any loose terminals or connectors.
Servomotor Rotates Without Reference Input	A SERVOPACK fault occurred.	A SERVOPACK board fault occurred.	Replace the SERVOPACK.
DB (dynamic brake) Does Not Operate	Improper parameter setting	Check the setting of parameter Pn001.0.	Correct the parameter setting.
	DB resistor disconnected	Check if excessive moment of inertia, motor overspeed, or DB frequently activated occurred.	Replace the SERVOPACK, and reconsider the load.
	DB drive circuit fault	DB circuit parts are faulty.	Replace the SERVOPACK.

上正科技有限公司
購買 維修 此手冊零組件
電話： 037-466333
Email: service@repairtw.com
Line id: @zzzz
www.repairtw.com

Table 10.5 Troubleshooting for Malfunction without Alarm Display (Cont'd)

Symptom	Cause	Inspection	Corrective Actions
		: Turn OFF the servo system before executing operations.	
Abnormal Noise from Servomotor	Mounting not secured	Check if there are any loosen mounting screws.	Tighten the mounting screws.
		Check if there are misalignment of couplings.	Align the couplings.
		Check if there are unbalanced couplings.	Balance the couplings.
	Defective bearings	Check for noise and vibration around the bearings.	If any problems, contact your Yaskawa representative.
	Vibration source on the driven machine.	Any foreign matter, damages, or deformation on the machine movable section.	Contact the machine manufacturer.
	Noise interference due to incorrect input signal wire specifications.	The specifications of input signal wires must be: Tinned annealed copper twisted-pair or twisted-pair shielded wires with core 0.12 mm^2 (0.0002 in^2) min.	Use the specified input signal wires.
	Noise interference due to incorrect encoder cable specifications.	The specifications of encoder cable must be: Tinned annealed copper twisted-pair or twisted-pair shielded wires with core 0.12 mm^2 (0.0002 in^2) min.	Use the specified encoder cable.
	Noise interference due to long encoder cable wiring distance	The wiring distance must be 20 m(65.6 ft) max.	Shorten the encoder cable wiring distance to the specified value.
	Noise due to damaged encoder cable	Check if the encoder cable is not damaged or bent.	Modify the encoder cable layout.
	Excessive noise to the encoder cable	Check if the encoder cable is bundled with high-current line or near the high-current line.	Install a surge protector to the encoder cable.
	FG varies by influence of machines such as welder on the servomotor side	Check if the machine is correctly grounded.	Ground the machine separately from PG side FG.
	SERVOPACK pulse counting error due to noise	Check if there is noise interference on the signal line from encoder.	Take measure against noise for the encoder wiring.
	Excessive vibration and shock to the encoder	Vibration from the machine occurred or servomotor installation is incorrect. (Mounting surface accuracy, fixing, alignment, etc.)	Reduce vibration from the machine, or secure the servomotor installation.
	Encoder fault	An encoder fault occurred.	Replace the motor.
Servomotor Vibrates at about 200 to 400 Hz	Speed loop gain value (Pn100) too high.	Factory setting: Kv=40.0 Hz Refer to the gain adjustment in User's Manual.	Reduce speed loop gain (Pn100) preset value.
	Position loop gain value (Pn102) too high	Factory setting: Kp=40.0, Refer to the gain adjustment in User's Manual.	Reduce position loop gain (Pn102) preset value.
	Incorrect speed loop integral time constant Pn101 setting	Factory setting: Ti=20.00 ms Refer to the gain adjustment in User's Manual.	Correct the speed loop integral time constant Pn101 setting.
	When the autotuning is used: Incorrect machine rigidity setting	Check the machine rigidity setting Fn001.	Select a proper machine rigidity setting Fn001.
	When the autotuning is not used: Incorrect moment of inertia ratio Pn103.	Check the moment of inertia ratio Pn103.	Correct the moment of inertia ratio Pn103.

Email: service@repairtw.com
Line id: @zzzz
www.repairtw.com

Table 10.5 Troubleshooting for Malfunction without Alarm Display (Cont'd)

Symptom	Cause	Inspection	Corrective Actions
		■: Turn OFF the servo system before executing operations.	
High Rotation Speed Overshoot on Starting and Stopping.	Speed loop gain value too high	Factory setting: Kv=40.0 Hz, Refer to the gain adjustment in User's Manual.	Reduce the speed loop gain Pn100 preset value.
	Position loop gain Pn102 value too big	Factory setting: Kp=40.0/s Refer to the gain adjustment in User's Manual.	Reduce the position loop gain Pn102 preset value.
	Incorrect speed loop integral time constant Pn101 setting	Factory setting: Ti=20.00 ms Refer to the gain adjustment in User's Manual.	Correct the speed loop integral time constant Pn101 setting.
	When the autotuning is used: Incorrect machine rigidity setting	Check the machine rigidity setting Fn001.	Select a proper machine rigidity setting Fn001.
	When the autotuning is not used: Incorrect rotational moment of inertia ratio	Check the rotational moment of inertia ratio Pn103.	Correct the moment of inertia ratio Pn103. Use the mode switch setting function.
ABS (absolute) Position Difference Error (The position saved in Host controller when the power turned OFF is different from the position when the power turned ON.)	Noise interference due to improper encoder cable specifications	The specifications of encoder cable must be: Tinned annealed copper twisted-pair or twisted-pair shielded wires with core 0.12 mm^2 (0.0002 in^2) min.	Use encoder cable with the specified specifications.
	Noise interference because the encoder cable distance is too long.	The wiring distance must be 20 m (65.6 ft) max.	The encoder cable distance must be within the specified range.
	Noise interference due to damaged encoder cable	Noise interference occurred to the signal line because the encoder cable is bent or its sheath damaged.	Correct the encoder cable layout.
	Excessive noise to the encoder cable	Check if the encoder cable is bundled with a high-current line or near high-current line.	Change the encoder cable layout so that no surge is applied.
	FG affected by noise from machines such as welder installed on servomotor side	Check if the grounding for the machine is properly made.	Ground the machine separately from PG side FG.
	SERVOPACK pulse counting error due to noise interference	Check if the signal line from the encoder receives influence from noise interference.	Take measures against noise for encoder wiring.
	Excessive vibration and shock to the encoder	Vibration from machine occurred or servomotor mounting such as mounting surface precision, fixing, and alignment is incorrect.	Reduce vibration from machine or mount securely the servomotor.
	Encoder fault	An encoder fault occurred. (no change in pulse count)	Replace the servomotor.
	SERVOPACK fault	Check the multi-turn data from SERVOPACK.	Replace the SERVOPACK.

上林科技有限公司
購買 維修 改造 測試 軟硬件
電話：0886-2-2600
Email: service@repair.tw.com
Line Id: @zzzz
www.repair.tw.com

Table 10.5 Troubleshooting for Malfunction without Alarm Display (Cont'd)

Symptom	Cause	Inspection	Corrective Actions
		■: Turn OFF the servo system before executing operations.	
Overtravel (OT) (Movement over the zone specified by the host controller)	An overtravel signal does not change {(P-OT (1NC-7) or N-OT (1CN-8) is at "H"}.	Check if the voltage of input signal external power supply (+24 V) is correct.	Connect to the external +24 V power supply.
		Check if the overtravel limit switch (SW) operates properly.	Correct the overtravel limit SW.
		Check if the overtravel limit switch (SW) is connected correctly.	Correct the overtravel limit SW wiring.
	The overtravel signal does not operate normally (P-OT or N-OT signal sometimes changes).	Check the fluctuation of the input signal external power supply (+24 V) voltage.	Stabilize the external +24 V power supply voltage.
		Check if the overtravel limit switch (SW) activate correctly.	Adjust the overtravel limit SW so that it operates correctly.
		Check if the overtravel limit switch wiring is correct. (check for damaged cables or loosen screws.)	Correct the overtravel limit SW wiring.
	Incorrect P-OT signal selection	Check the P-OT signal selection Pn50A.3.	Correct the setting of P-OT signal selection Pn50A.3.
		Check the N-OT signal selection Pn50B.0.	Correct the setting of N-OT signal selection Pn50B.0.
	Incorrect servomotor stop method selection	Check if "coast to stop" in servo OFF status is selected.	Check Pn001.0 and Pn001.1.
		Check if "coast to stop" in torque control mode is selected.	Check Pn001.0 and Pn001.1.
	Improper LS overtravel position setting	The distance to the LS overtravel (OT) is too short considering the coasting distance.	Correct the LS OT position.
	Noise interference due to improper encoder cable specifications	The encoder cable specifications must be: Tinned annealed copper twisted-pair or twisted-pair shielded wire with core 0.12 mm^2 (0.0002 in^2) min.	Use encoder cable with the specified specifications.
	Noise interference because the encoder cable distance is too long.	The wiring distance must be 20 m(65.6 ft) max.	The encoder cable distance must be within the specified range.
	Noise influence due to damaged encoder cable	Check if the encoder cable is bent or its sheath is damaged.	Correct the encoder cable layout.
	Excessive noise interference to encoder cable	Check if the encoder cable is bundled with a high-current line or near high-current line.	Change the encoder cable layout so that no surge is applied.
	FG varies because machine such as welder installed on servomotor side.	Check if grounding of the machine is made correctly.	Ground the machine separately from PG side FG.
	SERVOPACK pulse count error due to noise	Check if the signal line from the encoder is influenced by noise.	Take a measure against noise for the encoder wiring.
	Excessive vibration and shock to the encoder	Machine vibration occurred or servomotor mounting such as mounting surface precision, fixing, alignment is incorrect.	Reduce the machine vibration or mount the servomotor securely.
	Encoder fault	An encoder fault occurred.	Replace the servomotor.
	SERVOPACK fault	A SERVOPACK fault occurred.	Replace the SERVOPACK.
Position error (without alarm)	Unsecured coupling between machine and servomotor	Check if a position error occurs at the coupling between machine and servomotor.	Secure the coupling between the machine and servomotor.
	Noise interference due to improper input signal cable specifications	The input signal cable specifications must be: Twisted-pair or twisted-pair shielded wire with core 0.12 mm^2 (0.0002 in^2) min. and tinned annealed copper twisted wire.	Use input signal cable with the specified specifications.
	Encoder fault (pulse count does not change)	An encoder fault occurred. (pulse count does not change)	Replace the servomotor.
Servomotor Overheated	Ambient temperature too high	Measure servomotor ambient temperature.	Reduce ambient temperature to 40°C (104 °F) max.
	Servomotor surface dirty	Check visually.	Clean dust and oil from motor surface.
	Overloaded	Run under no load.	Reduce load or replace with larger capacity servomotor.

日正科技有限公司
購買、銷售、工手機零組件
電話：03/-466333
Email: service@repairtw.com
Line id: @zzzz
www.repairtw.com

10.2 Inspection and Maintenance

10.2.1 Servomotor Inspection

The AC servomotors are brushless. Simple, daily inspection is sufficient. The inspection and maintenance frequencies in the table are only guidelines. Increase or decrease the frequency to suit the operating conditions and environment.

IMPORTANT

During inspection and maintenance, do not disassemble the servomotor. If disassembly of the servomotor is required, contact your Yaskawa representative.

Table 10.6 Servomotor Inspections

Item	Frequency	Procedure	Comments
Vibration and Noise	Daily	Touch and listen.	Levels higher than normal?
Exterior	According to degree of contamination	Clean with cloth or compressed air.	–
Insulation Resistance Measurement	At least once a year	Disconnect SERVOPACK and test insulation resistance at 500 V. Must exceed 10 MΩ .*	Contact your Yaskawa representative if the insulation resistance is below 10 MΩ .
Replacing Oil Seal	At least once every 5000 hours	Remove servomotor from machine and replace oil seal.	Applies only to motors with oil seals.
Overhaul	At least once every 20000 hours or 5 years	Contact your Yaskawa representative.	The user should not disassemble and clean the servomotor.

* Measure across the servomotor FG and the phase-U, phase-V, or phase-W power line.

大正科技有限公司
購買、維修、比較伺服組件
電話： 037-466333
Email: service@repairtw.com
Line id: @zzzz
www.repairtw.com

10.2.2 SERVOPACK Inspection

For inspection and maintenance of the SERVOPACK, follow the inspection procedures in the following table at least once every year. Other routine inspections are not required.

Table 10.7 SERVOPACK Inspections

Item	Frequency	Procedure	Comments
Clean Interior and Circuit Boards	At least once a year	Check for dust, dirt, and oil on the surfaces.	Clean with compressed air.
Loose Screws	At least once a year	Check for loose terminal block and connector screws.	Tighten any loose screws.
Defective Parts in Unit or on Circuit Boards	At least once a year	Check for discoloration, damage or discontinuities due to heating.	Contact your Yaskawa representative.

10.2.3 SERVOPACK's Parts Replacement Schedule

The following electric or electronic parts are subject to mechanical wear or deterioration over time. To avoid failure, replace these parts at the frequency indicated.

The parameters of any SERVOPACKs overhauled by Yaskawa are reset to the standard settings before shipping. Be sure to confirm that the parameters are properly set before starting operation.

Table 10.8 Periodical Part Replacement

Part	Standard Replacement Period	Replacement Method	Operating Conditions
Cooling Fan	4 to 5 years	Replace with new part.	• Ambient Temperature: Annual average of 30°C • Load Factor: 80% max. • Operation Rate: 20 hours/day max.
Smoothing Capacitor	7 to 8 years	Test. Replace with new part if necessary.	
Relays	–	Test. Replace if necessary.	
Fuses	10 years	Replace with new part.	
Aluminum Electrolytic Capacitor on Circuit Board	5 years	Test. Replace with new circuit board if necessary.	

上正科技有限公司
購買、維修 此手冊零組件
電話： 037-466333
Email: service@repairtw.com
Line id: @zzzz
www.repairtw.com

11

Appendix

11.1 Servomotor Capacity Selection Examples - - - - - - - - - - - - - 11-2
11.1.1 Selection Example for Speed Control - 11-2
11.1.2 Selection Example for Position Control - 11-4
11.1.3 Calculating the Required Capacity of Regenerative Resistors - - - - 11-6

11.2 List of Parameters - 11-11
11.2.1 Utility Functions List - 11-11
11.2.2 List of Parameters - 11-12
11.2.3 Monitor Modes - 11-37

11.3 Using the Adjusting Command (ADJ: 3EH) - - - - - - - - - - 11-38
11.3.1 Autotuning - 11-38
11.3.2 Absolute Encoder Setup (Initialization) - 11-43
11.3.3 Multi-turn Limit Setting - 11-44
11.3.4 Automatic Offset Adjustment of Motor Current Detection Signals - 11-45

11.4 Parameter Recording Table - 11-46

上正科技有限公司
購買、維修、出租、回收伺服馬達
電話: 037-466333
Email: service@repairtw.com
Line id: @zzzz
www.repairtw.com

11.1 Servomotor Capacity Selection Examples

11.1.1 Selection Example for Speed Control

Mechanical Specifications

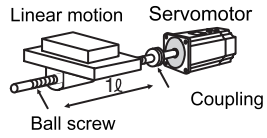

- Load speed: $V_\ell = 15$ m/min
- Linear motion section mass: M = 300 kg
- Ball screw length: $L_B = 1.0$ m
- Ball screw diameter: $D_B = 0.03$ m
- Ball screw lead: $P_B = 0.01$ m
- Coupling mass: $M_C = 1$ kg
- Coupling outer diameter: $D_C = 0.06$ m
- Feeding times: n=40 times/min
- Feeding distance: $\ell = 0.275$ m
- Feeding time: tm = 1.2 s max.
- Friction coefficient: $\mu = 0.2$
- Mechanical efficiency: $\eta = 0.9$ (90%)

(1) Speed Diagram

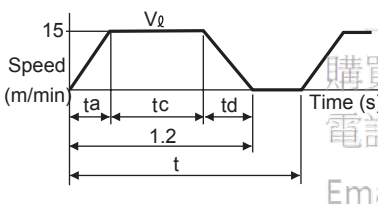

$$t = \frac{60}{n} = \frac{60}{40} = 1.5\,(s)$$

where ta = td

$$tc = 1.2 - 0.1 \times 2 = 1.0\,(s)$$

上正科技有限公司
購買、維修 此手冊零組件
電話 037486330
Email: service@repairtw.com
Line id: @zzzz
www.repairtw.com

(2) Rotation Speed

- Load axis rotation speed

$$N_\ell = \frac{V_\ell}{P_B} = \frac{15}{0.01} = 1500\ (\text{min}^{-1})$$

- Motor shaft rotation speed with the direct coupling: Gear ratio 1/R=1/1
  Therefore,

$$N_M = N_\ell \cdot R = 1500 \times 1 = 1500\ (\text{min}^{-1})$$

(3) Load torque

$$T_L = \frac{9.8\mu \cdot M \cdot P_B}{2\pi R \cdot \eta} = \frac{9.8 \times 0.2 \times 300 \times 0.01}{2\pi \times 1 \times 0.9} = 1.04\ (\text{N·m})$$

(4) Load Moment of Inertia

- Linear motion section

$$J_{L1} = M\left(\frac{P_B}{2\pi R}\right)^2 = 300 \times \left(\frac{0.01}{2\pi \times 1}\right)^2 = 7.6 \times 10^{-4}\ (\text{kg} \cdot \text{m}^2)$$

- Ball screw

$$J_B = \frac{\pi}{32}\rho \cdot L_B \cdot D_B^4 = \frac{\pi}{32} \times 7.87 \times 10^{+3} \times 1.0 \times (0.03)^4 = 6.3 \times 10^{-4}\ (\text{kg} \cdot \text{m}^2)$$

- Coupling

$$J_C = \frac{1}{8}M_C \cdot D_C^2 = \frac{1}{8} \times 1 \times (0.06)^2 = 4.5 \times 10^{-4}(\text{kg} \cdot \text{m}^2)$$

- Load moment of inertia at motor shaft

$$J_L = J_{L1} + J_B + J_C = 18.4 \times 10^{-4}\ (\text{kg} \cdot \text{m}^2)$$

(5) Load Moving Power

$$P_O = \frac{2\pi N_M \cdot T_L}{60} = \frac{2\pi \times 1500 \times 1.04}{60} = 163\ (W)$$

(6) Load Acceleration Power

$$P_a = \left(\frac{2\pi}{60} N_M\right)^2 \frac{J_L}{ta} = \left(\frac{2\pi}{60} \times 1500\right)^2 \frac{18.4 \times 10^{-4}}{0.1} = 454\ (W)$$

(7) Servomotor Provisional Selection

(a) Selecting Conditions

- $T_L \leq$ Motor rated torque
- Pa + Po = (1 to 2) × Motor rated output
- $N_M \leq$ Motor rated speed
- $J_L \leq$ SERVOPACK allowable load moment of inertia

The followings satisfy the conditions.

- SGMAH-08A Servomotor
- SGDS-08A SERVOPACK

(b) Specifications of the Provisionally Selected Servomotor and SERVOPACK

上正科技有限公司
購買、維修 此手冊零組件
電話： 037-466333
Email: service@repairtw.com
Line Id: @2222
www.repairtw.com

- Rated output: 750 (W)
- Rated motor speed: 3000 (RPM)
- Rated torque: 2.39 (N·m)
- Instantaneous peak torque: 7.16 (N·m)
- Servomotor moment of inertia: 2.10×10^{-4} (kg·m^2)
- SERVOPACK allowable load moment of inertia: 31.5×10^{-4} (kg·m^2)

(8) Verification on the Provisionally Selected Servomotor

- Required starting torque

$$T_P = \frac{2\pi N_M (J_M + J_L)}{60ta} + T_L = \frac{2\pi \times 1500 \times (2.10 + 18.4) \times 10^{-4}}{60 \times 0.1} + 1.04$$

≒ 4.3 (N·m) < Instantaneous peak torque…Satisfactory

- Required braking torque

$$T_S = \frac{2\pi N_M (J_M + J_L)}{60td} - T_L = \frac{2\pi \times 1500 \times (2.10 + 18.4) \times 10^{-4}}{60 \times 0.1} - 1.04$$

≒ 2.2 (N·m) < Instantaneous peak torque…Satisfactory

- Torque efficiency

$$T_{rms} = \sqrt{\frac{T_P^2 \cdot ta + T_L^2 \cdot tc + T_S^2 \cdot td}{t}} = \sqrt{\frac{(4.3)^2 \times 0.1 + (1.04)^2 \times 1.0 + (2.2)^2 \times 0.1}{1.5}}$$

≒ 1.51(N·m) < Rated torque…Satisfactory

(9) Result

The provisionally selected servomotor and SERVOPACK are confirmed to be applicable.
The torque diagram is shown below.

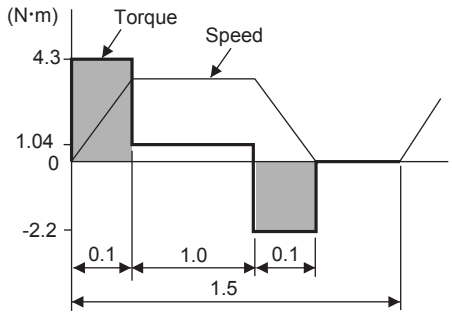

11.1.2 Selection Example for Position Control

Mechanical Specifications

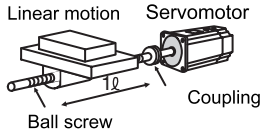

- Load speed: V_ℓ = 15 m/min
- Linear motion section mass: M = 80 kg
- Ball screw length: L_B = 0.8 m
- Ball screw diameter: D_B = 0.016 m
- Ball screw lead: P_B = 0.005 m
- Coupling mass: M_C = 0.3 kg
- Coupling outer diameter: D_C =0 .03 m
- Positioning times: n = 40 times/min
- Positioning distance: ℓ = 0.25 m
- Positioning time: tm = Less than 1.2 s
- Electrical stop accuracy: δ = ± 0.01 mm
- Friction coefficient: μ = 0.2
- Mechanical efficiency: η=0.9 (90%)

上正科技有限公司
購買、維修 此手冊零組件
電話： 937-466333
Email: service@repairtw.com
Line id: @222
www.repairtw.com

(1) Speed Diagram

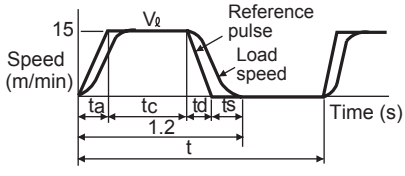

$$t = \frac{60}{n} = \frac{60}{40} = 1.5(s)$$

Where ta = td, ts = 0.1 (s)

$$ta = tm - ts - \frac{60\ell}{V_\ell} = 1.2 - 0.1 - \frac{60 \times 0.25}{15} = 0.1\ (s)$$

$$tc = 1.2 - 0.1 - 0.1 \times 2 = 0.9(s)$$

(2) Rotation Speed

- Load axis rotation speed

$$N_\ell = \frac{V_\ell}{P_B} = \frac{15}{0.005} = 3000\ (min^{-1})$$

- Motor shaft rotation speed with direct coupling: Gear ratio 1/R=1/1
  Therefore,

$$N_M = N_\ell \cdot R = 3000 \times 1 = 3000\ (min^{-1})$$

(3) Load Torque

$$T_L = \frac{9.8\mu \cdot M \cdot P_B}{2\pi R \cdot \eta} = \frac{9.8 \times 0.2 \times 80 \times 0.005}{2\pi \times 1 \times 0.9} = 0.139\ (N{\cdot}m)$$

(4) Load Moment of Inertia

- Liner motion section

$$J_{L1} = M\left(\frac{P_B}{2\pi R}\right)^2 = 80 \times \left(\frac{0.005}{2\pi \times 1}\right)^2 = 0.507 \times 10^{-4}\ (kg \cdot m^2)$$

- Ball screw

$$J_B = \frac{\pi}{32}\rho \cdot L_B \cdot D_B{}^4 = \frac{\pi}{32} \times 7.87 \times 10^3 \times 0.8 \times (0.016)^4 = 0.405 \times 10^{-4}\ (kg \cdot m^2)$$

- Coupling

$$J_C = \frac{1}{8} M_C \cdot D_C{}^4 = \frac{1}{8} \times 0.3 \times (0.03)^2 = 0.338 \times 10^{-4}\ (kg \cdot m^2)$$

- Load moment of inertia at the motor shaft

$$J_L = J_{L1} \cdot J_B \cdot J_C = 1.25 \times 10^{-4}\ (kg \cdot m^2)$$

(5) Load Moving Power

$$P_O = \frac{2\pi N_M \cdot T_L}{60} = \frac{2\pi \times 3000 \times 0.139}{60} = 43.7\ (W)$$

(6) Load Acceleration Power

$$P_a = \left(\frac{2\pi}{60} N_M\right)^2 \frac{J_L}{ta} = \left(\frac{2\pi}{60} \times 3000\right)^2 \frac{1.25 \times 10^{-4}}{0.1} = 123.4\ (W)$$

上正科技有限公司
購買 維修 此手冊零組件
電話： 037-466333
Email: service@repairtw.com
Line id: @zzzz
www.repairtw.com

(7) Provisionally Servomotor Selection

(a) Selecting Conditions

- $T_L \leq$ Motor rated torque
- Pa + Po = (1 to 2) × Motor rated output
- $N_M \leq$ Motor rated speed
- $J_L \leq$ SERVOPACK allowable load moment of inertia

The followings satisfy the conditions.

- SGMAH-02 Servomotor
- SGDS-02A01A SERVOPACK

(b) Specifications of Servomotor and SERVOPACK

- Rated output: 200 (W)
- Rated motor speed: 3000 (RPM)
- Rated torque: 0.637 (N·m)
- Instantaneous peak torque: 1.91 (N·m)
- Motor moment of inertia: 0.116×10^{-4} $(kg \cdot m^2)$
- SERVOPACK allowable load moment of inertia: 3.48×10^{-4} $(kg \cdot m^2)$
- Number of PG pulses: 32768 (P/R)

(8) Verification on Provisionally Selected Servomotor

- Required starting torque

$$T_P = \frac{2\pi N_M (J_M + J_L)}{60ta} + T_L = \frac{2\pi \times 3000 \times (0.209 + 1.25) \times 10^{-4}}{60 \times 0.1} + 0.139$$

≒ 0.597 (N·m) < Instantaneous peak torque···Satisfactory

- Required braking torque

$$T_S = \frac{2\pi N_M (J_M + J_L)}{60ta} - T_L = \frac{2\pi \times 3000 \times (0.209 + 1.25) \times 10^{-4}}{60 \times 0.1} - 0.139$$

≒ 0.319 (N·m) < Instantaneous peak torque···Satisfactory

- Effective torque

$$T_{rms} = \sqrt{\frac{T_P{}^2 \cdot ta + T_L{}^2 \cdot tc + T_S{}^2 \cdot td}{t}} = \sqrt{\frac{(0.597)^2 \times 0.1 + (0.139)^2 \times 0.9 + (0.319)^2 \times 0.1}{1.5}}$$

≒ 0.205 (N·m) < Rated torque···Satisfactory

The above confirms that the provisionally selected servomotor and SERVOPACK capacities are sufficient. In the next step, their performance in position control are checked.

(9) PG Feedback Pulse Dividing Ratio: Setting of Electronic Gear Ratio $(\frac{B}{A})$

As the electrical stop accuracy $\delta = \pm 0.01$mm, take the position detection unit $\Delta \ell = 0.01$mm/pulse.

$$\frac{P_B}{\Delta \ell} \times \left(\frac{B}{A}\right) = \frac{5}{0.01} \times \left(\frac{B}{A}\right) = 32768 \times 4$$

$$k = \frac{B}{A} = \frac{32768 \times 4}{500}$$

上正科技有限公司
購買、維修 此手冊零組件
電話： 037-466333
Email: service@repairtw.com
Line id: @zzzz
www.repairtw.com

(10) Reference Pulse Frequency

$$vs = \frac{1000 V_\ell}{60 \times \Delta_\ell} = \frac{1000 \times 15}{60 \times 0.01} = 25{,}000 \text{ (pps)}$$

(11) Error Counter Pulses

Position loop gain Kp = 30 (1/S)

$$\varepsilon = \frac{vs}{Kp} = \frac{25{,}000}{30} = 833 \text{ (pulse)}$$

(12) Electrical Stop Accuracy

$$-\Delta\varepsilon = -\frac{\varepsilon}{\left(\begin{array}{c}\text{SERVOPACK}\\ \text{control range}\end{array}\right) \times \frac{N_M}{N_R}} = -\frac{833}{5000 \times \frac{3000}{3000}} \fallingdotseq -0.17 < -1 \text{ (pulse)} = -0.01 \text{ (pulse)}$$

The above results confirm that the selected SERVOPACK and servomotor are applicable for the position control.

11.1.3 Calculating the Required Capacity of Regenerative Resistors

(1) Simple Calculation

When driving a servomotor with the horizontal axis, check the external regenerative resistor requirements using the calculation method shown below.

(a) SERVOPACKs with Capacities of 400 W or Less

SERVOPACKs with capacities of 400 W or less do not have built-in regenerative resistors. The energy that can be charged with capacitors is shown in the following table. If the rotational energy in the servomotor exceeds these values, then connect a external regenerative resistor.

Voltage	Applicable SERVOPACKs	Regenerative Energy that Can be Processed (joules)	Remarks
100 V	SGDS-A5F to -02F	28.6	Value when main circuit input voltage is 100 VAC
	SGDS-04F	39.0	
200 V	SGDS-A5A	15.2	Value when main circuit input voltage is 200 VAC
	SGDS-01A to -04A	30.5	

Calculate the rotational energy E_s in the servomotor from the following equation:

$E_S = J \times (N_M)^2/182$ (joules)

- $J = J_M + J_L$
- J_M: Servomotor rotor moment of inertia (kg·m^2)
- J_L: Load converted to shaft moment of inertia (kg·m^2)
- N_M: Rotation speed used by servomotor (RPM)

(b) SERVOPACKs with Capacities of 0.5 to 1.0 kW

上元科技有限公司
購買、維修 此上冊資訊在
電話： 887-466833
Email: service@repairtw.com
Line id: @2222
www.repairtw.com

Servomotors with capacities of 0.5 to 1.0 kW have built-in regenerative resistors. The allowable frequencies for just the servomotor in acceleration and deceleration operation, during the rotation speed cycle from 0 to the maximum rotation speed to 0, are summarized in the following table.

Convert the data into the values obtained with actual rotation speed and load moment of inertia to determine whether an external regenerative resistor is needed.

Voltage	Series	Allowable Frequencies in Regenerative Mode (times/min)			
	Capacity Symbol	05	06	08	10
200 V	SGMAH	–	110	46	–
	SGMPH	–	–	16	–
	SGMSH	–	–	–	19

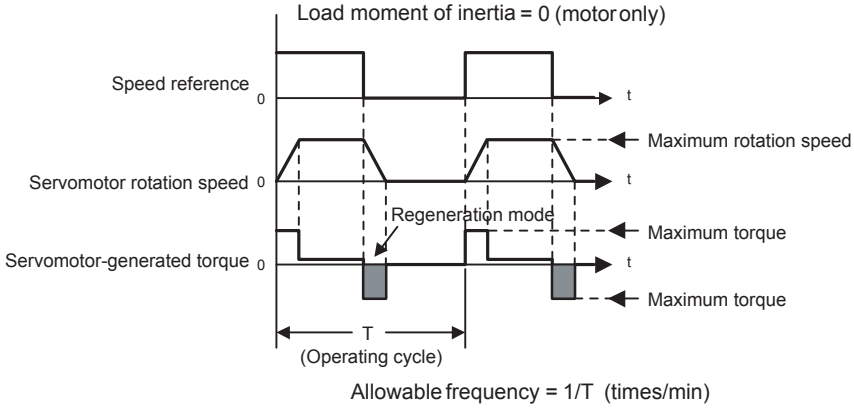

Operating Conditions for Allowable Regenerative Frequency Calculation

Use the following equation to calculate the allowable frequency for regeneration mode operation.

$$\text{Allowable frequency} = \frac{\text{Allowable frequency for Servomotor only}}{(1 + n)} \times \left(\frac{\text{Max. rotation speed}}{\text{Rotation speed}}\right)^2 \text{(times/min)}$$

- $n = J_L/J_M$
- J_M: Servomotor rotor moment of inertia ($kg \cdot m^2$)
- J_L: Load converted to shaft moment of inertia ($kg \cdot m^2$)

(2) Calculating the Regenerative Energy

This section shows the procedure for calculating the regenerative resistor capacity when acceleration and deceleration operation is as shown in the following diagram.

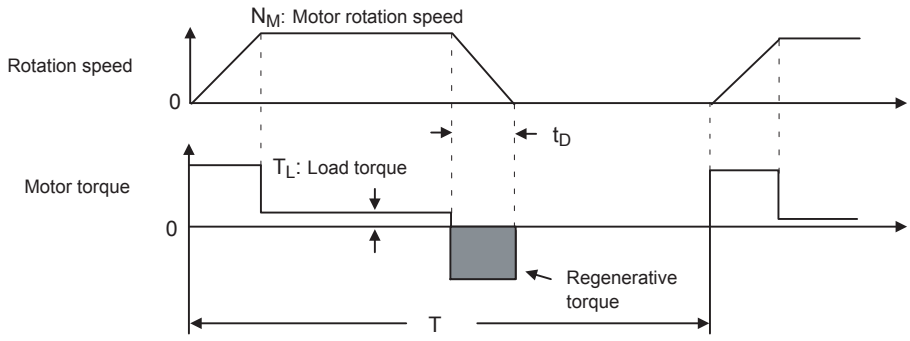

(a) Calculation Procedure

上正科技有限公司
購買、維修 此手冊零組件
電話： 037-466333
Email: service@repairtw.com
Line Id: @zzz2
www.repairtw.com

The procedure for calculating the regenerative capacity is as follows:

Step	Item	Symbol	Equation
1	Find the rotational energy of the servomotor.	E_S	$E_S = JN_M^2/182$
2	Find the energy consumed by load loss during the deceleration period.	E_L	$E_L = (\pi/60) N_M T_L t_D$
3	Calculate the energy lost from servomotor winding resistance.	E_M	(Value calculated from "Servomotor Winding Resistance Loss" diagrams) $\times t_D$
4	Calculate the SERVOPACK energy that can be absorbed.	E_C	Calculate from the "Absorbable SERVOPACK Energy" diagrams.
5	Find the energy consumed by the regenerative resistor.	E_K	$E_K = E_S - (E_L+E_M+E_C)$
6	Calculate the required regenerative resistor capacity.	W_K	$W_K = E_K/ (0.2 \times T)$

Note: 1. The "0.2" in the equation for calculating W_K is the value for when the regenerative resistor's utilized load ratio is 20%.
2. The units for the various symbols are as follows:
E_S to E_K: Energy joules (J)
T_L:Load torque (N·m)
W_K:Regenerative resistor required capacity (W)
t_D: Deceleration stopping time (s)
J:(= $J_M + J_L$)($kg \cdot m^2$)
T: Servomotor repeat operation period (s)
N_M: Servomotor rotation speed (RPM)

If the above calculation determines that the amount of regenerative power (Wk) processed by the built-in resistor is not exceeded, then an external regenerative resistor is not required.

If the amount of regenerative power that can be processed by the built-in resistor is exceeded, then install an external regenerative resistor for the capacity obtained from the above calculation.

If the energy consumed by load loss (in step 2 above) is unknown, then perform the calculation using $E_L = 0$.

When the operation period in regeneration mode is continuous, add the following items to the above calculation procedure in order to find the required capacity (W) for the regenerative resistor.

- Energy for continuous regeneration mode operation period: E_G (joules)
- Energy consumed by regenerative resistor: $E_K = E_S - (E_L + E_M + E_C) + E_G$
- Required capacity of regenerative resistor: $W_K = E_K / (0.2 \times T)$

Here, $E_G = (2\pi/60)\, N_{MG} T_G t_G$

- T_G: Servomotor's generated torque (N·m) in continuous regeneration mode operation period
- N_{MG}:Servomotor rotation speed (RPM) for same operation period as above
- t_G:Same operation period (s) as above

(b) Servomotor Winding Resistance Loss

The following diagrams show the relationship, for each servomotor, between the servomotor's generated torque and the winding resistance loss.

- SGMAH Servomotor, 200V

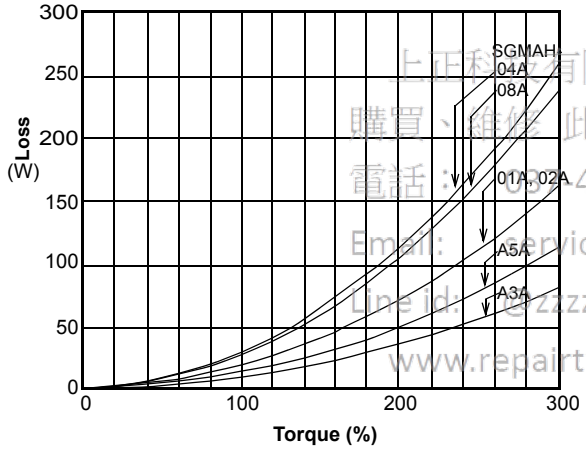

- SGMAH Servomotor, 100V

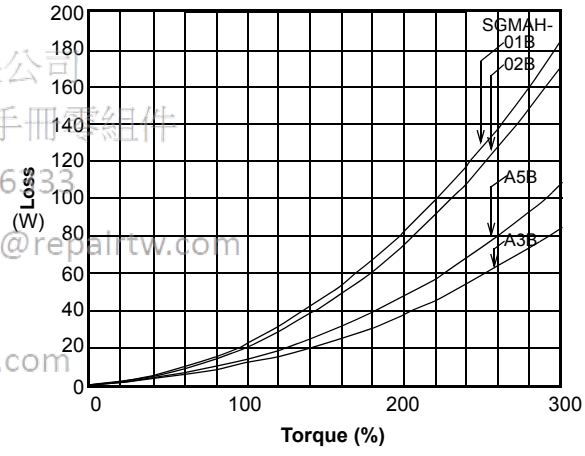

- SGMPH Servomotor, 200V

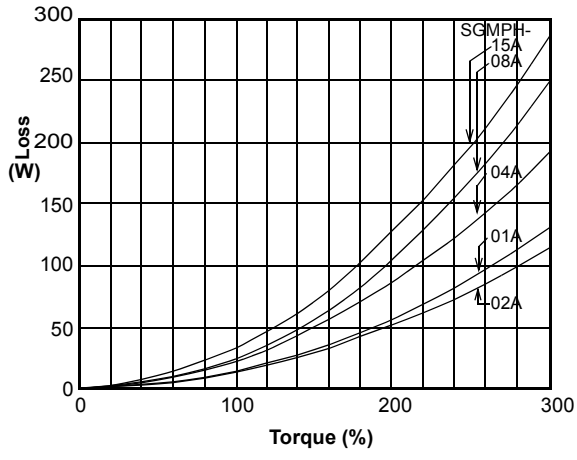

- SGMPH Servomotor, 100V

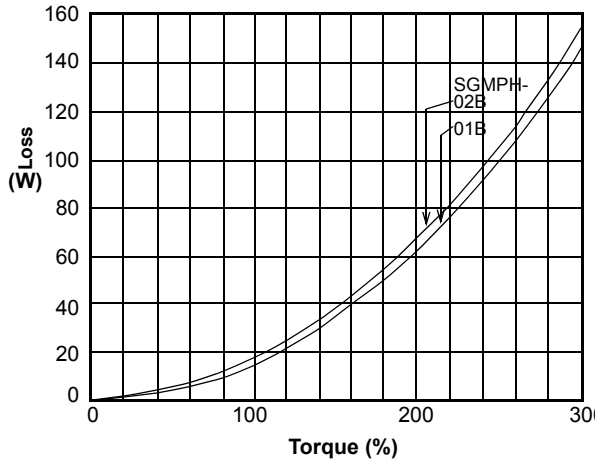

上正科技有限公司
購買、維修 此手冊零組件
電話：03-466133
Email: service@repairtw.com
Line id: @zzzz
www.repairtw.com

(3) SERVOPACK's Absorbable Energy

The following diagrams show the relationship between the SERVOPACK's input power supply voltage and its absorbable energy.

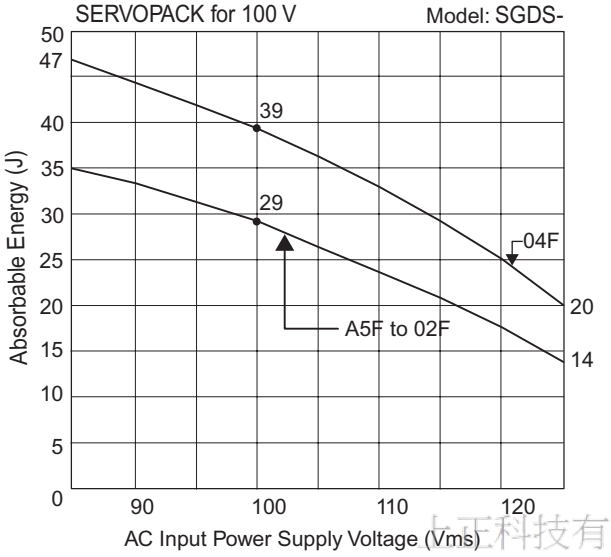

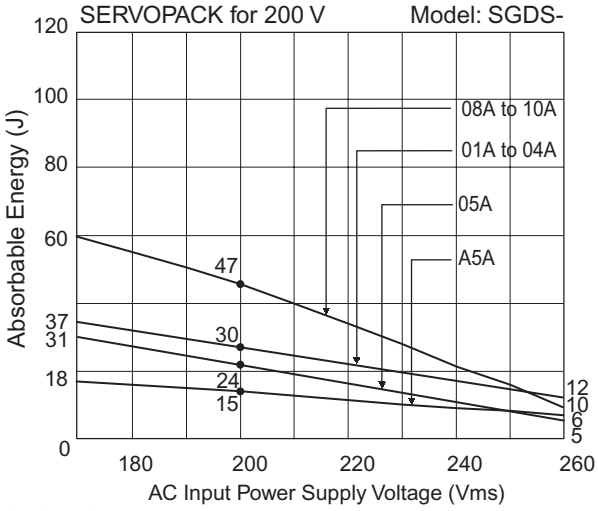

上正科技有限公司
購買、維修 此手冊零組件
電話： 037-466333
Email: service@repairtw.com
Line id: @zzzz
www.repairtw.com

11.2 List of Parameters

11.2.1 Utility Functions List

The following list shows the available utility functions.

Parameter No.	Function	Remarks
Fn000	Alarm traceback data display	
Fn001	Rigidity setting during normal autotuning	○
Fn002	JOG mode operation	○
Fn003	Origin search mode	○
Fn004	Program JOG operation	○
Fn005	Initialize parameter settings	○
Fn006	Clear alarm traceback data	○
Fn007	Save moment of inertia ratio data obtained from normal autotuning	○
Fn008	Absolute encoder multi-turn reset and encoder alarm reset	○
Fn00C	Manual zero-adjustment of analog monitor output	○
Fn00D	Manual gain-adjustment of analog monitor output	○
Fn00E	Automatic offset-adjustment of motor current detection signal	○
Fn00F	Manual offset-adjustment of motor current detection signal	○
Fn010	Write prohibited setting	
Fn011	Check servomotor models	
Fn012	Software version display	
Fn013	Multi-turn limit value setting change when a Multi-turn Limit Disagreement alarm occurs	○
Fn015	Servo gain constant settings by motor moment of inertia ratio Pn103 (valid only for less deviation)	○
Fn017	Advanced autotuning	○
Fn018	Online vibration monitor	○
Fn019	Easy FFT	○
Fn01A	One-parameter autotuning	○
Fn01B	Initialize vibration detection level	○
Fn01C	Positioning complete failed detection start	○
Fn01E*	SERVOPACK and servomotor ID Display	○

上林科技有限公司
購買 維修 此手冊零組件
電話: 037-466333
Email: service@repairtw.com
Line Id: @2222
www.repairtw.com

Note: 1. When the parameters marked with "○" in remarks column are set for Write Prohibited Setting (Fn010), the indication shown below appears and such parameters cannot be changed.

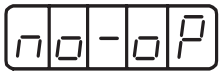

Blinks for one second

2. Refer to Σ III Series SGM□S/SGDS Digital Operator Operation Manual (manual no.: TOBPS80000001) for operations of utility functions.

11.2.2 List of Parameters

Use the following table for recording parameters. Parameter changing method is as follows:

⦿: Can be changed at any time, and immediately validated after changing. (Called an online parameter.)

○: Can be changed when DEN=1. Immediately validated after changing. Do not change when DEN = 0. Doing so may lead to overrun (Called an offline parameter.)

Δ: Validated after a Set Up Device command is sent, when loading and using parameters at power ON. Also validated when turning OFF and then ON the power supply again after a Write Non-volatile Parameter (PPRM_WR) command is sent.

Parameter No.	Name	Data Size	Setting Range	Units	Factory Setting	Changing Method	Reference Section
Pn000	Function Selection Basic Switch 0	2	–	–	0000	Δ	7.3.1

n. [4th digit] [3rd digit] [2nd digit] [1st digit]

Rotation Direction Selection

0	Sets CCW as forward direction.
1	Sets CW as forward direction (Reverse Rotation Mode).
2 and 3	Reserved (Do not change)

Reserved (Do not change)

Reserved (Do not change)

Reserved (Do not change)

上正科技有限公司
購買、維修 此手冊零組件
電話： 037-466333
Email: service@repairtw.com
Line id: @zzzz
www.repairtw.com

Pn001	Function Selection Application Switch 1	2	–	–	0000	Δ	–

n. [4th digit] [3rd digit] [2nd digit] [1st digit]

Servo OFF or Alarm Stop Mode
(Refer to "7.6.1 Using the Dynamic Brake.")

0	Stops the motor by applying dynamic brake (DB).
1	Stops the motor by applying dynamic brake (DB) and then releases DB.
2	Makes the motor coast to a stop state without using the dynamic brake (DB).

Overtravel (OT) Stop Mode
(Refer to "6.7.4 Operation Sequence When OT (Overtravel Limit Switch) Signal Is Input, "7.3.2 Setting the Overtravel Limit Function.")

0	Stops the motor by applying DB or by coasting.
1	Sets the torque of Pn406 to the maximum value, decelerate the motor to a stop, and then sets it an interlock state.
2	Sets the torque of Pn406 to the maximum value, decelerates the motor to a stop, and then sets it to coasting state.

AC/DC Power Input Selection
(Refer to "5.1.3 Typical Main Circuit Wiring Examples.")

0	Not applicable to DC power input: Input AC power supply through L1, L2 (, and L3) terminals.
1	Applicable to DC power input: Input DC power supply between B1/⊕and ⊖, or input DC power supply between B1/⊕and ⊖1.

Reserved (Do not change)

Note: Δ: Validated after a Set Up Device command is sent, when loading and using parameters at power ON. Also validated when turning OFF and then ON the power supply again after a Write Non-volatile Parameter (PPRM_WR) command is sent.

Parameter No.	Name	Data Size	Setting Range	Units	Factory Setting	Changing Method	Reference Section
Pn002	Function Selection Application Switch 2	2	–	–	0000	Δ	–

n. [4th digit] [3rd digit] [2nd digit] [1st digit]

Velocity Control (VELCTRL) Option (Refer to "6.3.30 Velocity Control.")

0	The set value of P_TLIM/N-TLIM is ignored. Set to "0".
1	P_TLIM and N_TLIM operate as the torque limit values.
2	TFF operates as the torque feed forward. Set N_TLIM to 0.
3	When OPTION.P_CL = 1, P_TLIM operates as the torque limit value. When OPTION.N_CL = 1, N_TLIM operates as the torque limit value.

Torque Control (TRQCTRL) Option (Refer to "6.3.31 Torque Control (TRQCTRL : 3DH).")

0	N/A Set VLIM to 0.
1	VLIM operates as the speed limit value.

Absolute Encoder Usage (Refer to "7.7.1 Selecting an Absolute Encoder, 7.7.3 Multiturn Limit Setting.")

0	Uses absolute encoder as an absolute encoder.
1	Uses absolute encoder as an incremental encoder.

Fully Closed Encoder Pulse Usage (Refer to "9.4 Related Parameters.")

0	Unused.
1	Uses fully closed encoder pulse without phase C (incremental encoder).
2	Reserved (Do not change)
3	Uses fully closed encoder pulse without phase C as reverse rotation mode (incremental encoder).
4	Reserved (Do not change)

上正科技有限公司
購買、維修、提供備零組件
電話：037-466333
Email: sales@repairtw.com
Line id: @zzzz
www.repairtw.com

Pn004	Function Selection Application Switch 4	2	0000–1110	–	0110	Δ	–

n. [4th digit] [3rd digit] [2nd digit] [1st digit]

- 1st digit: Reserved (Do not change)
- 2nd digit: Reserved (Do not change)
- 3rd digit: Reserved (Do not change)
- 4th digit: Reserved (Do not change)

Note: Δ: Validated after a Set Up Device command is sent, when loading and using parameters at power ON. Also validated when turning OFF and then ON the power supply again after a Write Non-volatile Parameter (PPRM_WR) command is sent.

Parameter No.	Name	Data Size	Setting Range	Units	Factory Setting	Changing Method	Reference Section
Pn006	Function Selection Application Switch 6	2	–	–	0002	⦿	7.5.5

n. □□□□ (4th digit, 3rd digit, 2nd digit, 1st digit)

Analog Monitor 1 Signal Selection (Refer to "8.7 Analog Monitor, 9.4 Related Parameters.")

00	Motor speed (1V/1000 RPM)
01	Speed reference (1V/1000 RPM)
02	Torque reference - Gravity compensation (Pn422) *
03	Position error (0.05 V/1 reference unit)
04	Position amplifier error (after electronic gears) (0.05 V/ 1 encoder pulse unit)
05	Position reference speed (1 V/1000 RPM)
06	Reserved (Do not change)
07	Motor load position error (0.01 V/1 reference unit)
08	Positioning completion signal (positioning completed: 5 V, positioning not completed: 0 V)
09	Speed feed forward (1 V/1000 RPM)
0A	Torque feed forward (1 V/100%)
0B to 1F	Reserved (Do not change)

Analog Monitor 1 Signal Multiplication Selection (Refer to "8.7 Analog Monitor.")

0	× 1
1	× 10
2	× 100
3	× 1/10
4	× 1/100

Reserved (Do not change)

Analog monitor 1 output voltage
= [(−1) × Signal selection (Pn006.0) × Signal multiplication (Pn006.2)] + Offset voltage (Pn550)

*The torque reference outputs a value "Torque reference value output from SERVOPACK− Gravity compensation (Pn422)" for monitor.

Note: ⦿: Can be changed at any time, and immediately validated after changing. (Called an online parameter.)

上品科技有限公司
購買、維修 此手冊零組件
電話： 03-7466333
Email: service@repairtw.com
Line Id: @zzzz
www.repairtw.com

Parameter No.	Name	Data Size	Setting Range	Units	Factory Setting	Changing Method	Reference Section
Pn007	Function Selection Application Switch 7	2	–	–	0000	⊙	7.5.5

n. [4th digit] [3rd digit] [2nd digit] [1st digit]

Analog Monitor 2 Signal Selection (Refer to "8.7 Analog Monitor, 9.4 Related Parameters.")

00	Motor speed (1 V/1000 RPM)
01	Speed reference (1 V/1000 RPM)
02	Torque reference − Gravity compensation (Pn422) (1V/100%) *
03	Position error (0.05 V/1 reference unit)
04	Position amplifier error (after electronic gears) (0.05 V/1 encoder pulse unit)
05	Position reference speed (1 V/1000 RPM)
06	Reserved (Do not change)
07	Motor load position error (0.01 V/1 reference unit)
08	Positioning completion signal (positioning completed: 5V, positioning not completed: 0V)
09	Speed feed forward (1 V/1000 RPM)
0A	Torque feed forward (1 V/100%)
0B to 1F	Reserved (Do not change)

上正科技有限公司
購買、維修 此手冊零組件
電話: 886-4-2463333
Email: service@repairtw.com
Line id: @zzzz
www.repairtw.com

Analog Monitor 2 Signal Multiplication Selection (Refer to "8.7 Analog Monitor.")

0	× 1
1	× 10
2	× 100
3	× 1/10
4	× 1/100

Reserved (Do not change)

Analog monitor 2 output voltage = [(−1) × Signal selection (Pn007.0) × Signal multiplication (Pn007.2)] + Offset voltage (Pn551)

*The torque reference outputs a value "Torque reference value output from SERVOPACK − Gravity compensation (Pn422)" for monitor.

Note: ⊙: Can be changed at any time, and immediately validated after changing. (Called an online parameter.)

Parameter No.	Name	Data Size	Setting Range	Units	Factory Setting	Changing Method	Reference Section
Pn008	Function Selection Application Switch 8	2	–	–	4000	Δ	–
Pn100	Speed Loop Gain	2	1.0 to 2000.0 Hz	0.1 Hz	40.0 Hz	⊙	8.5.4
Pn101	Speed Loop Integral Time Constant	2	0.15 to 512.00 ms	0.01 ms	20.00 ms	⊙	8.5.5
Pn102	Position Loop Gain	2	1.0 to 2000.0/s	0.1/s	40.0/s	⊙	8.5.3
Pn103	Moment of Inertia Ratio	2	0 to 20000%	1%	0%	⊙	8.2.6 8.5.4 11.3.1
Pn104	2nd Speed Loop Gain	2	1.0 to 2000.0 Hz	0.1 Hz	40.0 Hz	⊙	8.6.6
Pn105	2nd Speed Loop Integral Time Constant	2	0.15 to 512.00 ms	0.01 ms	20.00 ms	⊙	
Pn106	2nd Position Loop Gain	2	1.0 to 2000.0/s	0.1/s	40.0/s	⊙	
Pn107	Bias	2	0 to 450 RPM	1 RPM	0 RPM	⊙	8.6.3
Pn108	Bias Addition Width	2	0 to 250 reference units	Reference unit	7 reference units	⊙	
Pn109	Feed Forward Gain	2	0 to 100%	1%	0%	⊙	8.6.1
Pn10A	Feed Forward Filter Time Constant	2	0.00 to 64.00 ms	0.01 ms	0.00 ms	⊙	

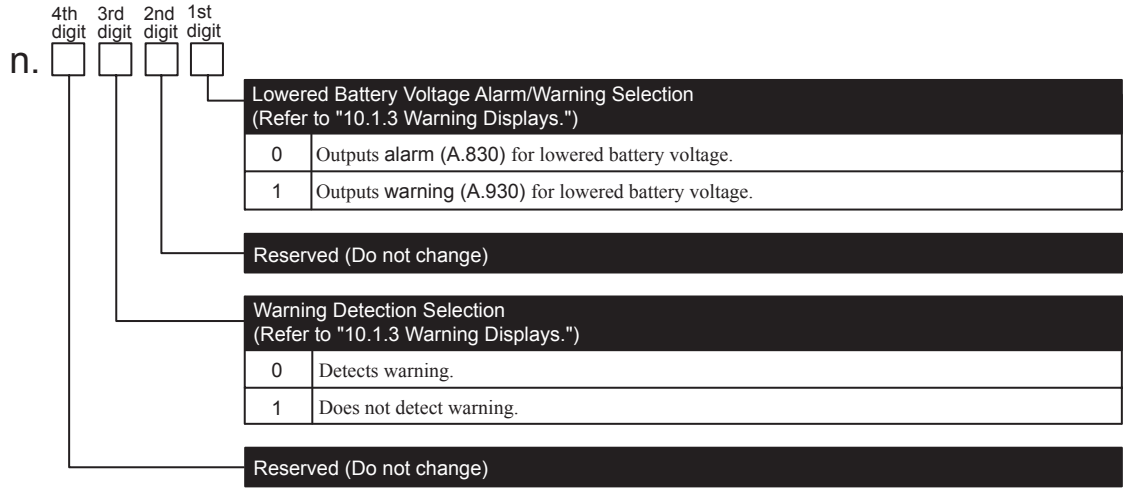

Note: ⊙: Can be changed at any time, and immediately validated after changing. (Called an online parameter.)

Δ: Validated after a Set Up Device command is sent, when loading and using parameters at power ON. Also validated when turning OFF and then ON the power supply again after a Write Non-volatile Parameter (PPRM_WR) command is sent.

上正科技有限公司
購買、維修此產品零組件
電話： 037-466333
Email: service@repairtw.com
Line id: @zzzz
www.repairtw.com

Parameter No.	Name	Data Size	Setting Range	Units	Factory Setting	Changing Method	Reference Section
Pn10B	Gain Related Application Switch	2	–	–	0000	Δ/⊙	8.6.8

n. □ □ □ □ (4th digit, 3rd digit, 2nd digit, 1st digit)

Mode Switch Selection (Refer to "8.6.2 Using the Mode Switch (P/PI Switching).")		Changing Method
0	Uses internal torque reference as the switching condition (Level setting: Pn10C)	⊙
1	Uses speed reference as the switching condition (Level setting: Pn10D)	
2	Uses acceleration as the switching condition (Level setting: Pn10E)	
3	Uses position error pulse as the switching condition (Level setting: Pn10F)	
4	No mode switch function available	

Speed Loop Control Method		Changing Method
0	PI control	Δ
1	I-P control	
2 and 3	Reserved (Do not change)	

Position Loop Control Method (Refer to "8.6.8 Less Deviation Control.")		Changing Method
0	Standard position control	Δ
1	Less deviation control	
2	Less deviation control with reference filter	

Reserved (Do not change)

專業維修公司
購買、維修此手冊零組件
電話： 037-466333
Email: service@repairtw.com
Line Id: @zzzz
www.repairtw.com

Pn10C	Mode Switch (torque reference)	2	0 to 800%	1%	200%	⊙	8.6.2
Pn10D	Mode Switch (speed reference)	2	0 to 10000 RPM	1 RPM	0 RPM	⊙	
Pn10E	Mode Switch (acceleration)	2	0 to 30000 RPM/ s	1 RPM/ s	0 RPM/ s	⊙	
Pn10F	Mode Switch (error pulse)	2	0 to 10000 reference units	1 reference unit	0 reference unit	⊙	

Note: ⊙: Can be changed at any time, and immediately validated after changing. (Called an online parameter.)

Δ: Validated after a Set Up Device command is sent, when loading and using parameters at power ON. Also validated when turning OFF and then ON the power supply again after a Write Non-volatile Parameter (PPRM_WR) command is sent.

Parameter No.	Name	Data Size	Setting Range	Units	Factory Setting	Changing Method	Reference Section
Pn110	Normal Autotuning Switches	2	–	–	0012	Δ/⊙	8.2.3 8.6.5
Pn111	Speed Feedback Compensation Gain *	2	1 to 500%	1%	100%	⊙	8.6.5
Pn119	Reference Filter Gain	2	1 to 2000.0/s	0.1/s	50.0/s	⊙	8.6.8
Pn11A	Reference Filter Gain Compensation	2	50.0 to 200.00 %	0.1 %	100.0 %	⊙	
Pn11E	Reference Filter Bias (Forward)	2	0.0 to 1000.0 %	0.1 %	100.0 %	⊙	
Pn11F	Position Integral Time Constant	2	0.0 to 5000.0 ms	0.1 ms	0.0 ms	⊙	8.6.12
Pn12B	3rd Speed Loop Gain	2	1.0 to 2000.0 Hz	0.1 Hz	40.0 Hz	⊙	8.6.6
Pn12C	3rd Speed Loop Integral Time Constant	2	0.15 to 512.00 ms	0.01 ms	20.00 ms	⊙	
Pn12D	3rd Position Loop Gain	2	1.0 to 2000.0 /s	0.1 /s	40.0 /s	⊙	
Pn12E	4th Speed Loop Gain	2	1.0 to 2000.0 Hz	0.1 Hz	40.0 Hz	⊙	
Pn12F	4th Speed Loop Integral Time Constant	2	0.15 to 512.00 ms	0.01 ms	20.00 ms	⊙	
Pn130	4th Position Loop Gain	2	1.0 to 2000.0 /s	0.1 /s	40.0 /s	⊙	
Pn131	Gain Switching Time1	2	0 to 65535 ms	1 ms	0 ms	⊙	
Pn132	Gain Switching Time 2	2	0 to 65535 ms	1 ms	0 ms	⊙	
Pn135	Gain Switching Waiting Time 1	2	0 to 65535 ms	1 ms	0 ms	⊙	8.6.6
Pn136	Gain Switching Waiting Time 2	2	0 to 65535 ms	1 ms	0 ms	⊙	

n. □ □ □ □ (4th digit, 3rd digit, 2nd digit, 1st digit)

Normal Autotuning Method (Refer to "11.3.1 Autotuning, 8.2.3 Selecting the Normal Autotuning Execution Method.")		Changing Method
0	Performs normal autotuning only when operation starts.	Δ
1	Always performs normal autotuning.	
2	Performs manual tuning but not normal autotuning.	

Speed Feedback Compensation Selection (Refer to "8.6.5 Speed Feedback Compensation.")		Changing Method
0	Available.	⊙
1	N/A	
2 to 3	Reserved (Do not change)	

Reserved (Do not change)

Reserved (Do not change)

上正科技有限公司
購買、維修、此手冊零組件
電話：03 7460533
Email: service@repairtw.com
Line id: @zzzz
www.repairtw.com

* The parameter Pn111 setting is enabled only when the parameter Pn110.1 is set to “0.”

Note: ⊙: Can be changed at any time, and immediately validated after changing. (Called an online parameter.)

Δ: Validated after a Set Up Device command is sent, when loading and using parameters at power ON. Also validated when turning OFF and then ON the power supply again after a Write Non-volatile Parameter (PPRM_WR) command is sent.

Parameter No.	Name	Data Size	Setting Range	Units	Factory Setting	Changing Method	Reference Section
Pn139	Automatic Gain Changeover Related Switch 1	2	–	–	0000	Δ	8.6.6
Pn144	Reference Filter Bias (Reverse)	2	0.0 to 1000.0 %	0.1 %	100.0 %	⊙	8.6.8

n. [4th digit] [3rd digit] [2nd digit] [1st digit]

Gain Switching Selection Switch

0	Manual gain switching
1	Automatic gain switching pattern 1 Changes automatically 1st gain to 2nd gain when the switching condition A is satisfied. Changes automatically 2nd gain to 1st gain when the switching condition B is satisfied.
2 to 4	Reserved (Do not change)

Gain Switching Condition A

0	Positioning completion signal (/COIN) ON
1	Positioning completion signal (/COIN) OFF
2	NEAR signal (/NEAR) ON
3	NEAR signal (/NEAR) OFF
4	Position reference filter output = 0 and Position Reference input = 0
5	Position reference input ≠ 0

Gain Switching Condition B

0 to 5	Same as Condition A

Reserved (Do not change)

上正科技有限公司
購買、維修 此手冊零組件
電話: 037-466333
Email: service@repairtw.com
Line Id: @2222
www.repairtw.com

Note: ⊙: Can be changed at any time, and immediately validated after changing. (Called an online parameter.)

Δ: Validated after a Set Up Device command is sent, when loading and using parameters at power ON. Also validated when turning OFF and then ON the power supply again after a Write Non-volatile Parameter (PPRM_WR) command is sent.

Parameter No.	Name	Data Size	Setting Range	Unit	Factory Setting	Changing Method	Reference Section
Pn150	Predictive Control Selection Switch	2	–	–	0210	Δ	8.6.7

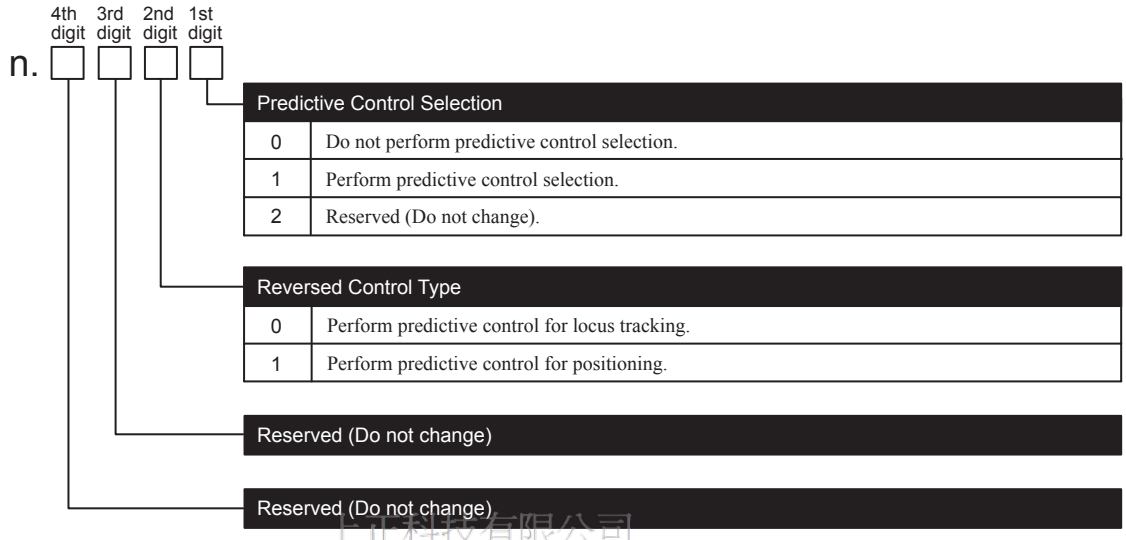

Pn151	Predictive Control Acceleration/ Deceleration Gain	2	0 to 300%	1%	100%	⊙	8.6.7
Pn152	Predictive Control Weighting Ratio	2	0 to 300%	1%	100%	⊙	
Pn1A0	Servo Rigidity	2	1 to 500%	1%	60%	⊙	8.6.6 8.6.8
Pn1A1	Servo Rigidity #2	2	1 to 500%	1%	60%	⊙	
Pn1A2	Speed Feedback Filter Time Constant	2	0.30 to 32.00 ms	0.01 ms	0.72 ms	⊙	
Pn1A3	Speed Feedback Filter Time Constant #2	2	0.30 to 32.00 ms	0.01 ms	0.72 ms	⊙	
Pn1A4	Torque Reference Filter Time Constant	2	0.00 to 25.00 ms	0.01 ms	0.30 ms	⊙	8.6.8

Note: ⊙: Can be changed at any time, and immediately validated after changing. (Called an online parameter.)
Δ: Validated after a Set Up Device command is sent, when loading and using parameters at power ON. Also validated when turning OFF and then ON the power supply again after a Write Non-volatile Parameter (PPRM_WR) command is sent.

中正科技有限公司
購買、維修 此手冊零組件
電話： 037-466333
Email: service@repairtw.com
Line Id: @222
www.repairtw.com

Parameter No.	Name	Data Size	Setting Range	Unit	Factory Setting	Changing Method	Reference Section
Pn1A7	Utility Control Switch	2	–	–	1121	Δ	8.6.6 8.6.8

n. [4th digit] [3rd digit] [2nd digit] [1st digit]

Integral Compensation processing
(Refer to "8.6.6 Switching Gain Settings, 8.6.8 Less Deviation Control.")

0	Do not perform integral compensation processing.
1	Perform integral compensation processing. (Factory setting)
2	Use gain switching for less deviation. Perform integral compensation on Gain Settings 1. Do not perform integral compensation on Gain Settings 2.
3	Use gain switching for less deviation. Do not perform integral compensation on Gain Settings 1. Perform integral compensation on Gain Setting 2.

Set units of filter setting

0	Reserved (Do not change)
1	Set the unit speed feedback filter time constant to 0.1 ms.
2	Set the unit speed feedback filter time constant to 0.01 ms.

Feedback compensation selection

0	Use the fullclosed feedback compensation.
1	Use feedback compensation.

Reserved (Do not change)

上正科技有限公司
購買、維修、IC、主機零組件
電話：037-466333
Email: service@repairtw.com
Line id: @zzzz
www.repairtw.com

Pn1A9	Utility Integral Gain	2	0 to 500 Hz	1 Hz	60 Hz	⦿	8.6.8
Pn1AA	Position Proportional Gain	2	0 to 500 Hz	1 Hz	60 Hz	⦿	
Pn1AB	Speed Integral Gain	2	0 to 500 Hz	1 Hz	60 Hz	⦿	
Pn1AC	Speed Proportional Gain	2	0 to 2000 Hz	1 Hz	380 Hz	⦿	
Pn200	Position Control Reference Form Selection Switch	2	–	–	0100	Δ	–

n. [4th digit] [3rd digit] [2nd digit] [1st digit]

Reserved (Do not change)

Reserved (Do not change)

Reserved (Do not change)

Reserved (Do not change)

Pn205	Multi-turn Limit Setting *	2	0 to 65535 rev	rev	65535 rev	Δ	7.7.3

Note: ⦿: Can be changed at any time, and immediately validated after changing. (Called an online parameter.)

Δ: Validated after a Set Up Device command is sent, when loading and using parameters at power ON. Also validated when turning OFF and then ON the power supply again after a Write Non-volatile Parameter (PPRM_WR) command is sent.

Parameter No.	Name	Data Size	Setting Range	Unit	Factory Setting	Changing Method	Reference Section
Pn207	Position Reference Function Switch	2	–	–	0000	Δ	–
	n. □□□□ (4th digit, 3rd digit, 2nd digit, 1st digit)						
	1st digit: Reserved (Do not change)						
	2nd digit: Reserved (Do not change)						
	3rd digit: Backlash Compensation Selection (Refer to "8.6.11 Backlash Compensation.")						
	0: N/A						
	1: Compensates in forward direction.						
	2: Compensates in reverse direction.						
	4th digit: /COIN Output Timing						
	0: Outputs when position deviation is the same or less than the COIN width.						
	1: Outputs when position deviation is the same or less than the COIN width and the reference after position reference filtering is 0.						
Pn209	Reserved (Do not change)	–	–	–	–	–	–
Pn20A	Number of External Scale Pitch	4	100 to 1048576 P/Rev	1 P/Rev	32768 P/Rev	Δ	9.4
Pn20E	Electronic Gear Ratio (Numerator)	4	1 to 1073741824	–	4	Δ	7.4.2
Pn210	Electronic Gear Ratio (Denominator)	4	1 to 1073741824	–	1	Δ	
Pn212	PG Dividing Pulse (pulse unit)	4	16 to 1073741824 P/Rev	1 P/ Rev	2048 P/ Rev	Δ	–
Pn214	Backlash Compensation Amount	2	-32768 to 32767 reference units	1 reference unit	0 reference unit	⦿	8.6.11
Pn215	Backlash Compensation Time Constant	2	0.00 to 655.35 ms	0.01 ms	0.00 ms	⦿	
Pn216	Reserved (Do not change)	–	–	–	–	–	–
Pn217	Reserved (Do not change)	–	–	–	–	–	–

Note: ⦿: Can be changed at any time, and immediately validated after changing. (Called an online parameter.)
Δ: Validated after a Set Up Device command is sent, when loading and using parameters at power ON. Also validated when turning OFF and then ON the power supply again after a Write Non-volatile Parameter (PPRM_WR) command is sent.

上揚科技有限公司
購買、維修、出售四零組件
電話： 037-466333
Email: service@repairtw.com
Line id: @zzzz
www.repairtw.com

Parameter No.	Name	Data Size	Setting Range	Unit	Factory Setting	Changing Method	Reference Section
Pn281	Encoder Output Resolution	2	1 to 256 P/ 4 multiple P	1 P/4 multiple P	20 P/4 multiple P	Δ	9.4
Pn300	Reserved (Do not change)	–	–	–	–	–	–
Pn301	Reserved (Do not change)	–	–	–	–	–	–
Pn302	Reserved (Do not change)	–	–	–	–	–	–
Pn303	Reserved (Do not change)	–	–	–	–	–	–
Pn304	JOG Speed	2	0 to 10000 RPM	1 RPM	500 RPM	⊙	–
Pn305	Soft Start Acceleration Time	2	0 to 10000 ms	1 ms	0 ms	⊙	6.3.30
Pn306	Soft Start Deceleration Time	2	0 to 10000 ms	1 ms	0 ms	⊙	
Pn307	Reserved (Do not change)	–	–	–	–	–	–
Pn308	Speed Feedback Filter Time Constant	2	0.00 to 655.35 ms	0.01 ms	0.00 ms	⊙	8.6.4
Pn310	Vibration Detection Switch	2	–	–	0000	⊙	8.6.4 8.5.2

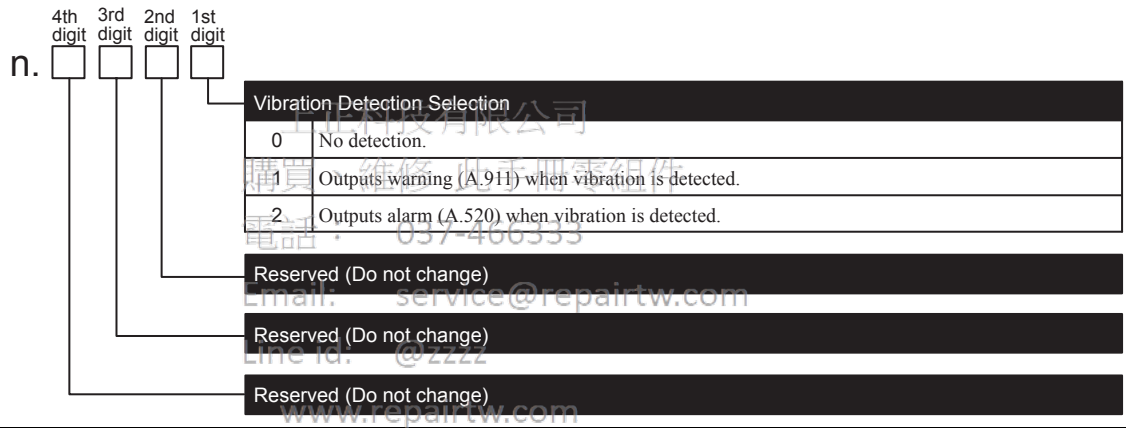

上作科技有限公司
購買、維修、此手冊零組件
電話： 037-466333
Email: service@repairtw.com
Line Id: @2222
www.repairtw.com

Pn311	Vibration Detection Sensibility	2	50 to 500%	1%	100%	⊙	–
Pn312	Vibration Detection Level	2	0 to 5000 RPM	1 RPM	50 RPM	⊙	–
Pn400	Reserved (Do not change)	–	–	–	–	–	–
Pn401	Torque Reference Filter Time Constant	2	0.00 to 655.35 ms	0.01 ms	1.00ms	⊙	8.6.9
Pn402	Forward Torque Limit	2	0 to 800%	1%	800%	⊙	–
Pn403	Reverse Torque Limit	2	0 to 800%	1%	800%	⊙	–
Pn404	Forward External Torque Limit	2	0 to 800%	1%	100%	⊙	–
Pn405	Reverse External Torque Limit	2	0 to 800%	1%	100%	⊙	–
Pn406	Emergency Stop Torque	2	0 to 800%	1%	800%	⊙	7.3.2
Pn407	Speed Limit during Torque Control	2	0 to 10000 RPM	1 RPM	10000 RPM	⊙	6.3.31

Note: ⊙: Can be changed at any time, and immediately validated after changing. (Called an online parameter.)

Δ: Validated after a Set Up Device command is sent, when loading and using parameters at power ON. Also validated when turning OFF and then ON the power supply again after a Write Non-volatile Parameter (PPRM_WR) command is sent.

Parameter No.	Name	Data Size	Setting Range	Unit	Factory Setting	Changing Method	Reference Section
Pn408	Torque Related Function Switch	2	–	–	0000	Δ/⊙	8.6.9

n. □□□□ (4th digit, 3rd digit, 2nd digit, 1st digit)

1st Step Notch Filter Selection (Refer to "8.6.9 Torque Reference Filter.")		Changing Method
0	N/A	⊙
1	Uses 1st step notch filter for torque reference.	

Speed Limit Selection		Changing Method
0	Uses the smaller value between motor max. speed or parameter Pn407 as speed limit value.	Δ
1	Uses the smaller value between overspeed detection speed or parameter Pn407 as speed limit value.	

2nd Step Notch Filter Selection (Refer to "8.6.9 Torque Reference Filter.")		Changing Method
0	2nd step notch filter N/A	⊙
1	Uses 2nd step notch filter for torque reference.	

Reserved (Do not change)

Pn409	1st Step Notch Filter Frequency	2	50 to 2000 Hz	1 Hz	2000 Hz	⊙	8.6.9
Pn40A	1st Step Notch Filter Q Value	2	0.50 to 10.00	0.01	0.70	⊙	
Pn40C	2nd Step Notch Filter Frequency	2	50 to 2000 Hz	1 Hz	2000 Hz	⊙	
Pn40D	2nd Step Notch Filter Q Value	2	0.50 to 10.00	0.01	0.70	⊙	
Pn40F	2nd Step 2nd Torque Reference Filter Frequency	2	100 to 2000 Hz	1 Hz	2000 Hz	⊙	
Pn410	2nd Step 2nd Torque Reference Filter Q Value	2	0.50 to 10.00	0.01	0.70	⊙	
Pn411	3rd Step Torque Reference Filter Time Constant	2	0 to 65535 µs	1 µs	0 µs	⊙	
Pn412	1st Step 2nd Torque Reference Filter Time Constant	2	0.00 to 655.35 ms	0.01 ms	1.00 ms	⊙	8.6.6
Pn413	1st Step 3rd Torque Reference Filter Time Constant	2	0.00 to 655.35 ms	0.01 ms	1.00 ms	⊙	
Pn414	1st Step 4th Torque Reference Filter Time Constant	2	0.00 to 655.35 ms	0.01 ms	1.00 ms	⊙	
Pn420	Damping for Vibration Suppression on Stopping	2	10 to 100%	1%	100%	⊙	8.6.10
Pn421	Vibration Suppression Starting Time	2	0 to 65535 ms	1 ms	1000 ms	⊙	
Pn422	Gravity Compensation Torque	2	-200.00 to 200.00%	0.01 %	0.00%	⊙	–
Pn456	Sweep Torque Reference Amplitude	2	1 to 800%	1%	15%	⊙	–
Pn501	Zero Clamp Level	2	0 to 10000 RPM	1 RPM	10 RPM	⊙	–
Pn502	Zero Speed Level	2	1 to 10000 RPM	1 RPM	20 RPM	⊙	–

Note: ⊙: Can be changed at any time, and immediately validated after changing. (Called an online parameter.)
Δ: Validated after a Set Up Device command is sent, when loading and using parameters at power ON. Also validated when turning OFF and then ON the power supply again after a Write Non-volatile Parameter (PPRM_WR) command is sent.

上正科技有限公司
購買、維修此手冊零組件
電話： 037-466333
Email: service@repairtw.com
Line id: @zzzz
www.repairtw.com

Parameter No.	Name	Data Size	Setting Range	Unit	Factory Setting	Changing Method	Reference Section
Pn503	Speed Coincidence Signal Output Width	2	0 to 100 RPM	1 RPM	10 RPM	⦿	–
Pn506	Brake Reference - Servo OFF Delay Time	2	0 to 50 (0 to 500 ms)	10 ms	0 ms	⦿	7.6.2
Pn507	Brake Reference Output Speed Level	2	0 to 10000 RPM	1 RPM	100 RPM	⦿	
Pn508	Waiting Time for Brake Signal When Motor Running	2	10 to 100 (100 to 1000 ms)	10 ms	50 (500 ms)	⦿	
Pn509	Instantaneous Power Cut Hold Time	2	20 to 1000 ms	1 ms	20 ms	⦿	–
Pn50A	Input Signal Selection 1	2	–	–	1881	Δ	7.5.2

n. □ □ □ □ (4th digit, 3rd digit, 2nd digit, 1st digit)

Sequence Input Signal Allocation Mode (Refer to "7.5.2 Input Circuit Signal Allocation.")

0	Do not set. (Automatically sets to 1.)
1	Uses sequence input signal mapping.

/S-ON Signal Mapping

0 to F	Do not set. (Automatically sets to 8.)

P-CON Signal Mapping

0 to F	Do not set. (Automatically sets to 8.)

P-OT Signal Mapping (Refer to "7.3.2 Setting the Overtravel Limit Function, 7.5.2 Input Circuit Signal Allocation.")

0	ON when CN1-13 input signal is ON (L-level)
1	ON when CN1-7 input signal is ON (L-level)
2	ON when CN1-8 input signal is ON (L-level)
3	ON when CN1-9 input signal is ON (L-level)
4	ON when CN1-10 input signal is ON (L-level)
5	ON when CN1-11 input signal is ON (L-level)
6	ON when CN1-12 input signal is ON (L-level)
7	Sets signal ON.
8	Sets signal OFF.
9	OFF when CN1-13 input signal is OFF (H-level)
A	OFF when CN1-7 input signal is OFF (H-level)
B	OFF when CN1-8 input signal is OFF (H-level)
C	OFF when CN1-9 input signal is OFF (H-level)
D	OFF when CN1-10 input signal is OFF (H-level)
E	OFF when CN1-11 input signal is OFF (H-level)
F	OFF when CN1-12 input signal is OFF (H-level)

上正科技有限公司
購買、維修、批手冊零組件
電話: 037466333
E-mail: service@repairtw.com
Line id: @222
www.repairtw.com

Note: ⦿: Can be changed at any time, and immediately validated after changing. (Called an online parameter.)

Δ: Validated after a Set Up Device command is sent, when loading and using parameters at power ON. Also validated when turning OFF and then ON the power supply again after a Write Non-volatile Parameter (PPRM_WR) command is sent.

Parameter No.	Name	Data Size	Setting Range	Unit	Factory Setting	Changing Method	Reference Section
Pn50B	Input Signal Selection 2	2	–	–	8882	Δ	7.5.2

n. □□□□ (4th digit, 3rd digit, 2nd digit, 1st digit)

N-OT Signal Mapping
(Refer to "7.3.2 Setting the Overtravel Limit Function.")

0	ON when CN1-13 input signal is ON (L-level)
1	ON when CN1-7 input signal is ON (L-level)
2	ON when CN1-8 input signal is ON (L-level)
3	ON when CN1-9 input signal is ON (L-level)
4	ON when CN1-10 input signal is ON (L-level)
5	ON when CN1-11 input signal is ON (L-level)
6	ON when CN1-12 input signal is ON (L-level)
7	Sets signal ON.
8	Sets signal OFF.
9	ON when CN1-13 input signal is OFF (H-level)
A	ON when CN1-7 input signal is OFF (H-level)
B	ON when CN1-8 input signal is OFF (H-level)
C	ON when CN1-9 input signal is OFF (H-level)
D	ON when CN1-10 input signal is OFF (H-level)
E	ON when CN1-11 input signal is OFF (H-level)
F	ON when CN1-12 input signal is OFF (H-level)

Reserved (Do not change)

Reserved (Do not change)

Reserved (Do not change)

上正科技有限公司
購買、維修 此手冊零組件
電話： 037 466338
Email: service@repairtw.com
Line id: @zzzz
www.repairtw.com

Pn50C	Input Signal Selection 3	2	–	–	8888	Δ	–

n. □□□□ (4th digit, 3rd digit, 2nd digit, 1st digit)

Reserved (Do not change)

Reserved (Do not change)

Reserved (Do not change)

Reserved (Do not change)

Note: Δ: Validated after a Set Up Device command is sent, when loading and using parameters at power ON. Also validated when turning OFF and then ON the power supply again after a Write Non-volatile Parameter (PPRM_WR) command is sent.

Parameter No.	Name	Data Size	Setting Range	Unit	Factory Setting	Changing Method	Reference Section
Pn50D	Input Signal Selection 4	2	–	–	8888	Δ	–

n. [4th digit] [3rd digit] [2nd digit] [1st digit]

- 1st digit: Reserved (Do not change)
- 2nd digit: Reserved (Do not change)
- 3rd digit: Reserved (Do not change)
- 4th digit: Reserved (Do not change)

Pn50E	Output Signal Selection 1	2	–	–	0000	Δ	7.5.3

n. [4th digit] [3rd digit] [2nd digit] [1st digit]

/COIN Signal Mapping

0	Do not use.
1	Outputs the signal from CN1-1, 2 output terminal.
2	Outputs the signal from CN1-23, 24 output terminal.
3	Outputs the signal from CN1-25, 26 output terminal.

/V-CMP Signal Mapping

0 to 3	Same as /COIN

/TGON Signal Mapping

0 to 3	Same as /COIN

/S-RDY Signal Mapping

0 to 3	Same as /COIN

上揚科技有限公司
購買、維修 此手冊零組件
電話: 037466333
Email: service@repairtw.com
Line Id: @3zzz
www.repairtw.com

Note: Δ: Validated after a Set Up Device command is sent, when loading and using parameters at power ON. Also validated when turning OFF and then ON the power supply again after a Write Non-volatile Parameter (PPRM_WR) command is sent.

Parameter No.	Name	Data Size	Setting Range	Unit	Factory Setting	Changing Method	Reference Section
Pn50F	Output Signal Selection 2	2	–	–	0000	Δ	7.5.3

n. □ □ □ □ (4th digit, 3rd digit, 2nd digit, 1st digit)

/CLT Signal Mapping

0	Do not use.
1	Outputs the signal from CN1-1, 2 output terminal.
2	Outputs the signal from CN1-23, 24 output terminal.
3	Outputs the signal from CN1-25, 26 output terminal.

/VLT Signal Mapping

0 to 3	Same as /CLT

/BK Signal Mapping
(Refer to "6.3.14 Apply Brake (BRK_ON : 21H), 6.3.15 Release Brake (BRK_OFF : 22H), 7.6.2 Using the Holding Brake.")

0 to 3	Same as /CLT

/WARN Signal Mapping

0 to 3	Same as /CLT

上詮科技有限公司
購買、維修 此手冊零組件
電話： 037-466333
Email: service@repairtw.com
Line Id: @zzzz
www.repairtw.com

Pn510	Output Signal Selection 3	2	–	–	0000	Δ	7.5.3

n. □ □ □ □ (4th digit, 3rd digit, 2nd digit, 1st digit)

/NEAR Signal Mapping

0 to 3	Same as /CLT

Reserved (Do not change)

Reserved (Do not change)

Reserved (Do not change)

Note: Δ: Validated after a Set Up Device command is sent, when loading and using parameters at power ON. Also validated when turning OFF and then ON the power supply again after a Write Non-volatile Parameter (PPRM_WR) command is sent.

Parameter No.	Name	Data Size	Setting Range	Unit	Factory Setting	Changing Method	Reference Section
Pn511	Input Signal Selection 5	2	–	–	6543	Δ	6.3.19 6.3.27 6.3.28 6.3.29 7.5.2

n. □ □ □ □ (4th digit, 3rd digit, 2nd digit, 1st digit)

/DEC Signal Mapping

0	Inputs the signal from CN1-13 input terminal.
1	Inputs the signal from CN1-7 input terminal.
2	Inputs the signal from CN1-8 input terminal.
3	Inputs the signal from CN1-9 input terminal.
4	Inputs the signal from CN1-10 input terminal.
5	Inputs the signal from CN1-11 input terminal.
6	Inputs the signal from CN1-12 input terminal.
7	Sets signal ON.
8	Sets signal OFF.
9	Inputs the reversal signal from CN1-13 input terminal.
A	Inputs the reversal signal from CN1-7 input terminal.
B	Inputs the reversal signal from CN1-8 input terminal.
C	Inputs the reversal signal from CN1-9 input terminal.
D	Inputs the reversal signal from CN1-10 input terminal.
E	Inputs the reversal signal from CN1-11 input terminal.
F	Inputs the reversal signal from CN1-12 input terminal.

上揚科技有限公司
購買、維修、此手冊零組件
電話： 03/-466333
Email: service@repairtw.com
Line Id: @zzzz
www.repairtw.com

/EXT1 Signal Mapping

4□	Inputs the signal from CN1-10 input terminal.
5	Inputs the signal from CN1-11 input terminal.
6	Inputs the signal from CN1-12 input terminal.
7	Sets signal ON.
8	Sets signal OFF.
D	Inputs the reversal signal from CN1-10 input terminal.
E	Inputs the reversal signal from CN1-11 input terminal.
F	Inputs the reversal signal from CN1-12 input terminal.
0 to 3 9 to F	Sets signal OFF.

/EXT2 Signal Mapping

0 to F	Same as /EXT1

/EXT3 Signal Mapping

0 to F	Same as /EXT1

Note: Δ: Validated after a Set Up Device command is sent, when loading and using parameters at power ON. Also validated when turning OFF and then ON the power supply again after a Write Non-volatile Parameter (PPRM_WR) command is sent.

Parameter No.	Name	Data Size	Setting Range	Unit	Factory Setting	Changing Method	Reference Section
Pn512	Output Signal Reversal Setting	2	–	–	0000	Δ	7.5.3
Pn513	Reserved (Do not change)	–	–	–	–	–	–
Pn515	Input Signal Selection 5	2	–	–	8888	Δ	–
Pn51B	Excessive Error Level between Motor and Load Position	4	0 to 1073741824 reference units	1 reference unit	1000 reference units	⊙	9.4
Pn51E	Excessive Position Error Warning Level	2	10 to 100%	1%	100%	⊙	10.1.4
Pn520	Excessive Position Error Alarm Level	4	1 to 1073741823 reference units	1 reference unit	262144 reference units	⊙	8.5.3 10.1.4
Pn522	Positioning Completion Width	4	0 to 1073741824 reference units	1 reference unit	7 reference units	⊙	7.4.4

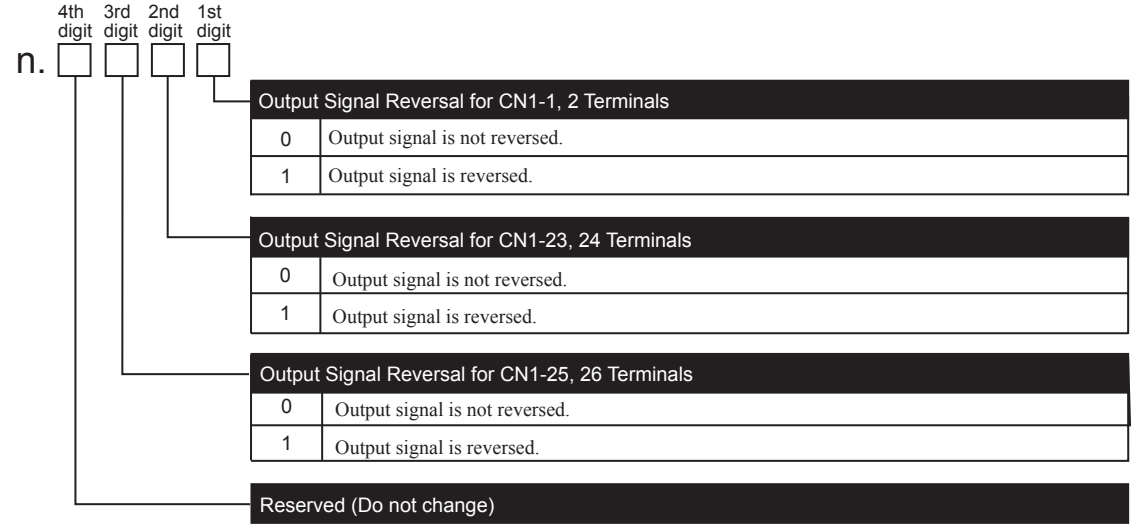

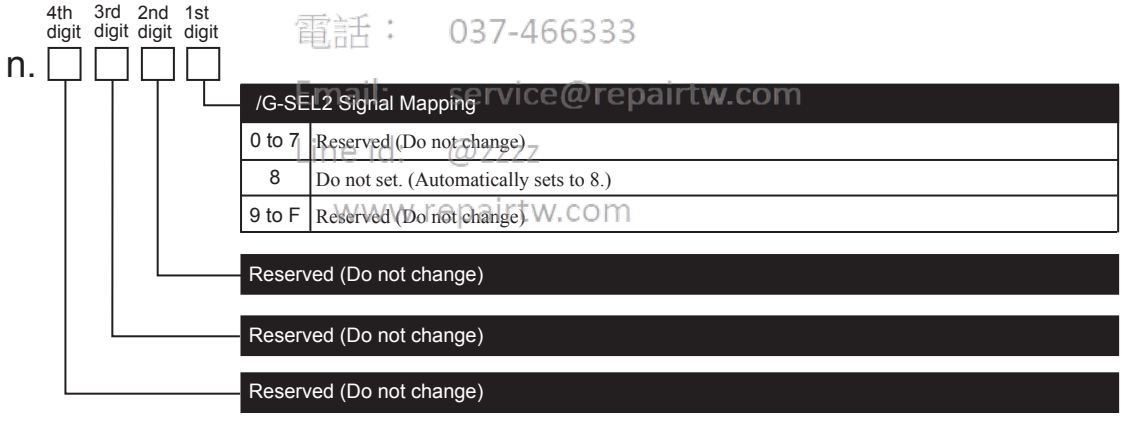

上正科技有限公司
購買、維修 此手冊零組件
電話： 037-466333
Email: service@repairtw.com
Line ID: @zzzz
www.repairtw.com

Note: ⊙: Can be changed at any time, and immediately validated after changing. (Called an online parameter.)
Δ: Validated after a Set Up Device command is sent, when loading and using parameters at power ON. Also validated when turning OFF and then ON the power supply again after a Write Non-volatile Parameter (PPRM_WR) command is sent.

Parameter No.	Name	Data Size	Setting Range	Unit	Factory Setting	Changing Method	Reference Section
Pn524	NEAR Signal Width	4	0 to 1073741824 reference units	1 reference unit	1073741824 reference units	⊙	7.4.4
Pn526	Excessive Position Error Alarm Level at Servo ON	4	1 to 1073741823 reference units	1 reference unit	262144 reference units	⊙	10.1.3
Pn528	Excessive Position Error Warning Detection Level at Servo ON	2	10 to 100%	1%	100%	⊙	10.1.4
Pn529	Speed Limit Level at Servo ON	2	0 to 10000 RPM	1 RPM	10000 RPM	⊙	10.1.4
Pn52A	Multiple Value per Fully Closed Encoder Rotation	2	0 to 100 %	1 %	20 %	⊙	–
Pn52F	Monitor Display at Power ON	2	0 to FFF	–	FFF	⊙	–
Pn530	Program JOG Operation Related Switch	2	–	–	0000	⊙	–
Pn531	Program JOG Movement Distance	4	1 to 1073741824 reference units	1 reference unit	32768 reference units	⊙	–
Pn533	Program JOG Movement Speed	2	1 to 10000 RPM	1 RPM	500 RPM	⊙	–
Pn534	Program JOG Acceleration/ Deceleration Time	2	2 to 10000 ms	1 ms	100 ms	⊙	–
Pn535	Program JOG Waiting Time	2	0 to 10000 ms	1 ms	100 ms	⊙	–
Pn536	Number of Times of Program JOG Movement	2	1 to 1000 times	1 time	1 time	⊙	–
Pn540	Gain Limit	2	1.0 to 2000.0 Hz	0.1 Hz	200.0 Hz	⊙	–
Pn550	Analog Monitor 1 Offset Voltage	2	-1000.0 to 1000.0 V	0.1 V	0.0 V	⊙	8.7
Pn551	Analog Monitor 2 Offset Voltage	2	-1000.0 to 1000.0 V	0.1 V	0.0 V	⊙	

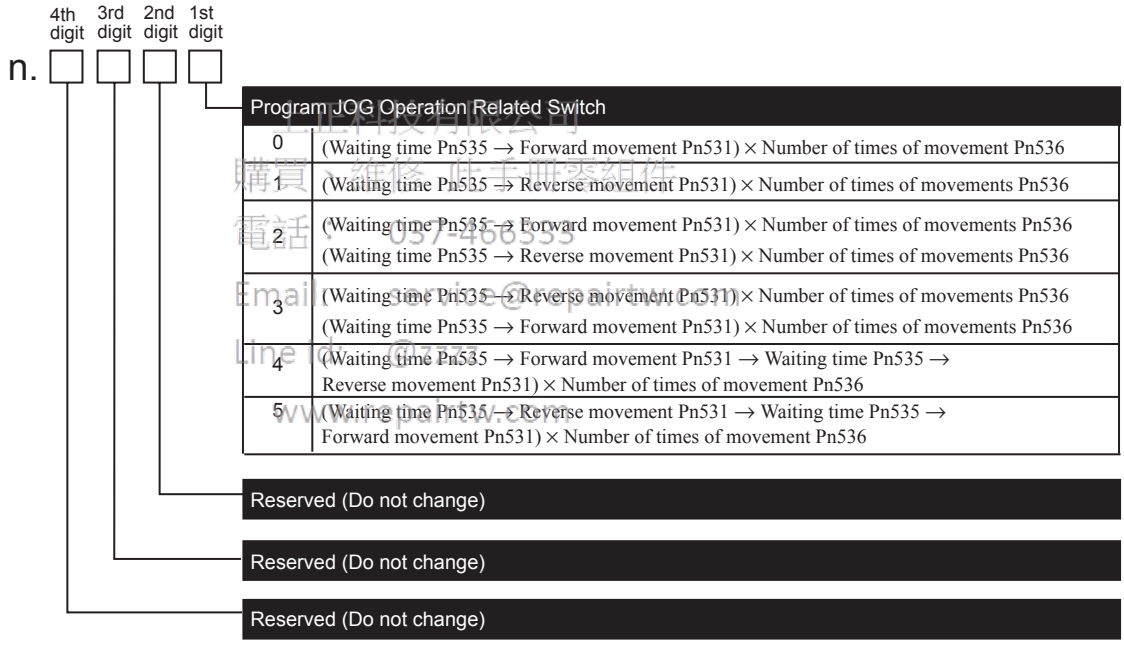

上正科技有限公司
購買、維修、此手冊零組件
電話：03-4268595
Email: sales@sanjyu.com.tw
Line Id: @3333
www.sanjyu.com.tw

* 1. Normally set to "0." When using an external regenerative resistor, set the capacity (W) of the regenerative resistor.
* 2. The upper limit is the maximum output capacity (W) of the SERVOPACK.

Note: ⊙: Can be changed at any time, and immediately validated after changing. (Called an online parameter.)

Parameter No.	Name	Data Size	Setting Range	Unit	Factory Setting	Changing Method	Reference Section
Pn600	Regenerative Resistor Capacity *1	2	Depends on SERVO-PACK Capacity *2	10 W	0 W	⊙	5.7.2
Pn800	Communication Control	2	–	–	0040	⊙	–

n. □ □ □ □ (4th digit, 3rd digit, 2nd digit, 1st digit)

MECHATROLINK-II Communications Check Mask (for Debugging)
(Refer to "7.5.4 Debug Function.")

0	Normal status
1	Ignores MECHATROLINK-II communications error (A.E60).
2	Ignores WDT error (A.E50).
3	Ignores both MECHATROLINK-II communications error (A.E60) and WDT error (A.E50).

Warning Check Mask
(Refer to "10.1.3 Warning Displays.")

0□	Normal status
1	Ignores data setting warning (A.94□).
2	Ignores command warning (A.95□).
3	Ignores both data setting warning (A.94□) and command warning (A.95□).
4	Ignores communications warning (A.96□).
5	Ignores both data setting warning (A.94□) and communications warning (A.96□).
6	Ignores both command warning (A.95□) and communications warning (A.96□).
7	Ignores data setting warning (A.94□), command warning (A.95□), and communications warning (A.96□).

Communications Error Counts at Single Transmission

0 to F	Detects communications error (A.E60) when a MECHATROLINK-II receive data error occurs the number of times of {set value + 2} continuously.

Reserved (Do not change)

上正科技有限公司
購買、維修、IC手冊零組件
電話： 037-466333
Email: service@repairtw.com
Line Id: @zzzz
www.repairtw.com

Pn801	Function Selection Application 6 (Software LS)	2	–	–	0003	⊙	–

n. □ □ □ □ (4th digit, 3rd digit, 2nd digit, 1st digit)

Software Limit Function
(Refer to "7.3.3 Software Limit Settings.")

0	Software limit enabled.
1	Forward software limit enabled.
2	Reverse software limit disabled.
3	Software limit disabled in both directions.

Reserved (Do not change)

Software Limit Check Using References
(Refer to "7.3.3 Software Limit Settings.")

0	No software limit check using references.
1	Software limit check using references.

Reserved (Do not change)

Note: ⊙: Can be changed at any time, and immediately validated after changing. (Called an online parameter.)

Parameter No.	Name	Data Size	Setting Range	Unit	Factory Setting	Changing Method	Reference Section
Pn802	Reserved (Do not change)	–	–	–	–	–	–
Pn803	Origin Range	2	0 to 250	Reference unit	10	⦿	7.4.4
Pn804 Pn805	Forward Software Limit	4	-1073741823 to 1073741823	Reference unit	8192*99999	⦿	7.3.3
Pn806 Pn807	Reverse Software Limit	4	-1073741823 to 1073741823	Reference unit	–8192 *99999	⦿	
Pn808 Pn809	Absolute Encoder Origin Offset*	4	-1073741823 to 1073741823	Reference unit	0	⦿	7.7.4
Pn80A	1st Step Linear Acceleration Constant	2	1 to 65535	10000 reference units/s^2	100	○	6.3.28 6.3.29 7.4.3
Pn80B	2nd Step Linear Acceleration Constant	2	1 to 65535	10000 reference units/s^2	100	○	
Pn80C	Acceleration Constant Switching Speed	2	0 to 65535	100 reference units/s	0	○	
Pn80D	1st Step Linear Deceleration Constant	2	1 to 65535	10000 reference units/s^2	100	○	
Pn80E	2nd Step Linear Deceleration Constant	2	1 to 65535	10000 reference units/s^2	100	○	
Pn80F	Deceleration Constant Switching Speed	2	0 to 65535	100 reference units/s	0	○	
Pn810	Exponential Function Accel/ Decel Bias	2	0 to 32767	Reference unit/s	0	○	7.4.3
Pn811	Exponential Function Accel/ Decel Time Constant	2	0 to 5100	0.1 ms	0	○	
Pn812	Moving Average Time	2	0 to 5100	0.1 ms	0	○	
Pn813	Reserved (Do not change)	–	–	–	–	–	–
Pn814 Pn815	Final Travel Distance for External Input Positioning (EX_POSING)	4	-1073741823 to 1073741823	Reference unit	100	○	6.3.28 7.4.4

* Enabled when setting is made before SENS_ON, not after SENS_ON.

Note: ⦿: Can be changed at any time, and immediately validated after changing. (Called an online parameter.)

○: Can be changed when DEN=1. Immediately validated after changing. Do not change when DEN = 0. Doing so may lead to overrun. (Called an offline parameter.)

上正科技有限公司
購買、維修 此手冊零組件
電話： 037-466333
Email: service@repairtw.com
Line id: @zzzz
www.repairtw.com

Parameter No.	Name	Data Size	Setting Range	Unit	Factory Setting	Changing Method	Reference Section
Pn816	Homing Mode Setting	2	–	–	0000	○	6.3.29 7.4.4
	n. □□□□ 4th digit: Reserved (Do not change) 3rd digit: Reserved (Do not change) 2nd digit: Reserved (Do not change) 1st digit: Homing Direction 0: Forward 1: Reverse						
Pn817	Homing Approach Speed 1	2	0 to 65535	100 reference units/s	50	○	6.3.29 7.4.4
Pn818	Homing Approach Speed 2	2	0 to 65535	100 reference units/s	5	○	
Pn819 Pn81A	Final Travel Distance for homing	4	-1073741823 to 1073741823	Reference Unit	100	○	
Pn81B	Reserved (Do not change)	–	–	–	–	–	–
Pn81C	Reserved (Do not change)	–	–	–	–	–	–
Pn81D	Reserved (Do not change)	–	–	–	–	–	–

Note: ○: Can be changed when DEN=1. Immediately validated after changing. Do not change when DEN = 0. Doing so may lead to overrun. (Called an offline parameter.)

上正科技有限公司
購買、維修、技術諮詢零組件
電話： 037-466333
Email: service@repairtw.com
www.repairtw.com

Parameter No.	Name	Data Size	Setting Range	Unit	Factory Setting	Changing Method	Reference Section
Pn81E	Input Signal Monitor Selection	2	–	–	0000	⦿	6.5.5

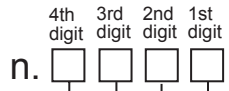

IO12 Signal Mapping

0	No mapping
1	Monitors CN1-13 input terminal.
2	Monitors CN1-7 input terminal.
3	Monitors CN1-8 input terminal.
4	Monitors CN1-9 input terminal.
5	Monitors CN1-10 input terminal.
6	Monitors CN1-11 input terminal.
7	Monitors CN1-12 input terminal.

IO13 Signal Mapping

0 to 7	Same as IO12

IO14 Signal Mapping

0 to 7	Same as IO12

IO15 Signal Mapping

0 to 7	Same as IO12

全球科技有限公司
購買、維修 此手冊零組件
電話： 037-466333
Email: service@repairtw.com
Line id: @zzzz
www.repairtw.com

Pn81F	Reserved (Do not change)	–	–	–	–	–	–
Pn820 Pn821	Latching Area Upper Limit	4	-2147483646 to 2147483647	Reference unit	0	⦿	6.3.19 6.3.27
Pn822 Pn823	Latching Area Lower Limit	4	-2147483646 to 2147483647	Reference unit	0	⦿	6.3.28 6.3.29

Note: ⦿: Can be changed at any time, and immediately validated after changing. (Called an online parameter.)

○: Can be changed when DEN=1. Immediately validated after changing. Do not change when DEN = 0. Doing so may lead to overrun. (Called an offline parameter.)

Δ: Validated after a Set Up Device command is sent, when loading and using parameters at power ON. Also validated when turning OFF and then ON the power supply again after a Write Non-volatile Parameter (PPRM_WR) command is sent.

Parame-ter No.	Name		Data Size	Setting Range	Unit	Factory Setting	Changing Method	Reference Section
Pn824	Option Monitor 1 Selection		2		Reference unit	0000	⊙	
	0000H	Motor Rotation Speed [1000000H/Overspeed Detection Speed]			–			
	0001H	Speed Reference [1000000H/Overspeed Detection Speed]			–			
	0002H	Torque [1000000H/Maximum Torque]			–			
	0003H	Position Deviation (Lowermost 32 bits) [Reference Unit]			–			
	0004H	Position Deviation (Uppermost 32 bits) [Reference Unit]			–			
	0005H	System Reserved			–			
	0006H	System Reserved			–			
	000AH	Encoder Count (Lowermost 32 bits) [Reference Unit]			–			
	000BH	Encoder Count (Uppermost 32 bits) [Reference Unit]			–			
	000CH	Fully Closed Encoder Count (Lower 32 bits) [Reference Unit]			–			
	000DH	Fully Closed Encoder Count (Upper 32 bits) [Reference Unit]			–			
	0010H	Un000: Motor Rotation Speed [RPM]			–			
	0011H	Un001: Speed Reference [RPM]			–			
	0012H	Un002:Torque Reference [%]			–			
	0013H	Un003: Rotational Angle 1 [pulse]			–			
	0014H	Un004: Rotational Angle 2 [deg]			–			
	0015H	Un005: Input Signal Monitor			–			
	0016H	Un006: Output Signal Monitor			–			
	0017H	Un007: Input Position Reference Speed [RPM]			–			
	0018H	Un008: Position Deviation [Reference Unit]			–			
	0019H	Un009: Accumulated Load Ratio [%]			–			
	001AH	Un00A: Regenerative Load Ratio [%]			–			
	001BH	Un00B: DB Resistance Consumption Power [%]			–			
	001CH	Un00C: Input Reference Pulse Counter [pulse]			–			
	001DH	Un00D: Feedback Pulse Counter [pulse]			–			
	001EH	Un00E: Fully Closed Feedback Pulse Counter [pulse]			–			
	001FH	Un00F: Fully Closed Feedback Speed [pulse/s]			–			
	0023H	Initial Multi-turn Data [Rev]			–			
	0024H	Initial Incremental Data [pulse]			–			
Pn825	Option Monitor 2 Selection		2	–	FFFFH	0000	⊙	
	0000H to 0024H	Same as Option Monitor 1 Selection						
Pn900 to Pn910	Reserved (Do not change)		–	–	–	–	–	–
Pn920 to Pn95F	Reserved (Do not change)		–	–	–	–	–	–

Note: ⊙: Can be changed at any time, and immediately validated after changing. (Called an online parameter.)

上立科技有限公司
購買、維修 此手冊零組件
電話: 037-466333
Email: service@repairtw.com
Line Id: @zzzz
www.repairtw.com

11.2.3 Monitor Modes

The following list shows monitor modes available.

Parameter No.	Content of Display	Unit
Un000	Motor speed	RPM
Un001	Speed reference (displayed only in speed control mode)	RPM
Un002	Internal torque reference (in percentage to the rated torque)	%
Un003	Rotation angle 1 (32-bit decimal code)	pulse
Un004	Rotation angle 2 (Angle to the zero-point (electrical angle))	deg
Un005	Input signal monitor	–
Un006	Output signal monitor	–
Un007	Input reference pulse speed (displayed only in position control mode)	RPM
Un008	Error counter (position error amount) (displayed only in position control mode)	reference unit
Un009	Accumulated load ratio (in percentage to the rated torque: effective torque in cycle of 10 seconds)	%
Un00A	Regenerative load ratio (in percentage to the processable regenerative power: regenerative power consumption in cycle of 10 seconds)	%
Un00B	Power consumed by DB resistance (in percentage to the processable power at DB activation: display in cycle of 10 seconds)	%
Un00C	Input reference pulse counter (32-bit decimal code) (displayed only in position control mode)	pulse
Un00D	Feedback pulse counter (32-bit decimal code)	pulse

上正科技有限公司
購買、維修、進口電子零組件
電話: 037-466333
Email: service@repairtw.com
Line id: @zzzz
www.repairtw.com

11.3 Using the Adjusting Command (ADJ: 3EH)

11.3.1 Autotuning

If positioning is taking a long time, the speed loop gain or position loop gain of the servo system may not be set properly. If the gain settings are wrong, set them properly in accordance with the configuration and rigidity of the machine.

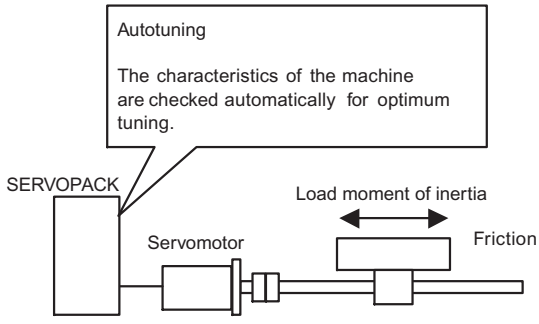

The SERVOPACK incorporates the normal autotuning function, which checks the characteristics of the machine automatically and makes the necessary servo gain adjustments. The function is easy to use and makes it possible for even beginners to perform servo gain tuning and set all servo gains as parameters.

The following parameters can be set automatically by using the normal autotuning function.

Parameter	Content
Pn100	Speed loop gain
Pn101	Speed loop integral time constant
Pn102	Position loop gain
Pn401	1st Step 1st Torque reference filter time constant

正正科技有限公司
購買、維修 此手冊零組件
電話： 037-466333
Email: service@repairtw.com
Line id: @zzzz
www.repairtw.com

(1) Normal Autotuning

Normal autotuning is a control function which enables the SERVOPACK to check changes in the load moment of inertia during operation in order to maintain the target value for speed loop gain or position loop gain.
Normal autotuning may not work well in the following cases.

- When the cycle for load moment of inertia change is 200 ms or shorter (when the load changes rapidly).
- When the application has slow acceleration or deceleration using the soft start function, and the speed error of the servomotor being driven is small.
- When adjusting the servo gain manually and operating at low gain (a machine rigidity of 1 or less).

Disable the normal autotuning function and adjust the gain manually if tuning is not possible.

IMPORTANT

Do not use normal autotuning in the following cases.
- When using IP control for the speed loop.

- Setting Parameters for Normal Autotuning

The following flowchart shows the procedure for setting the parameters for normal autotuning.

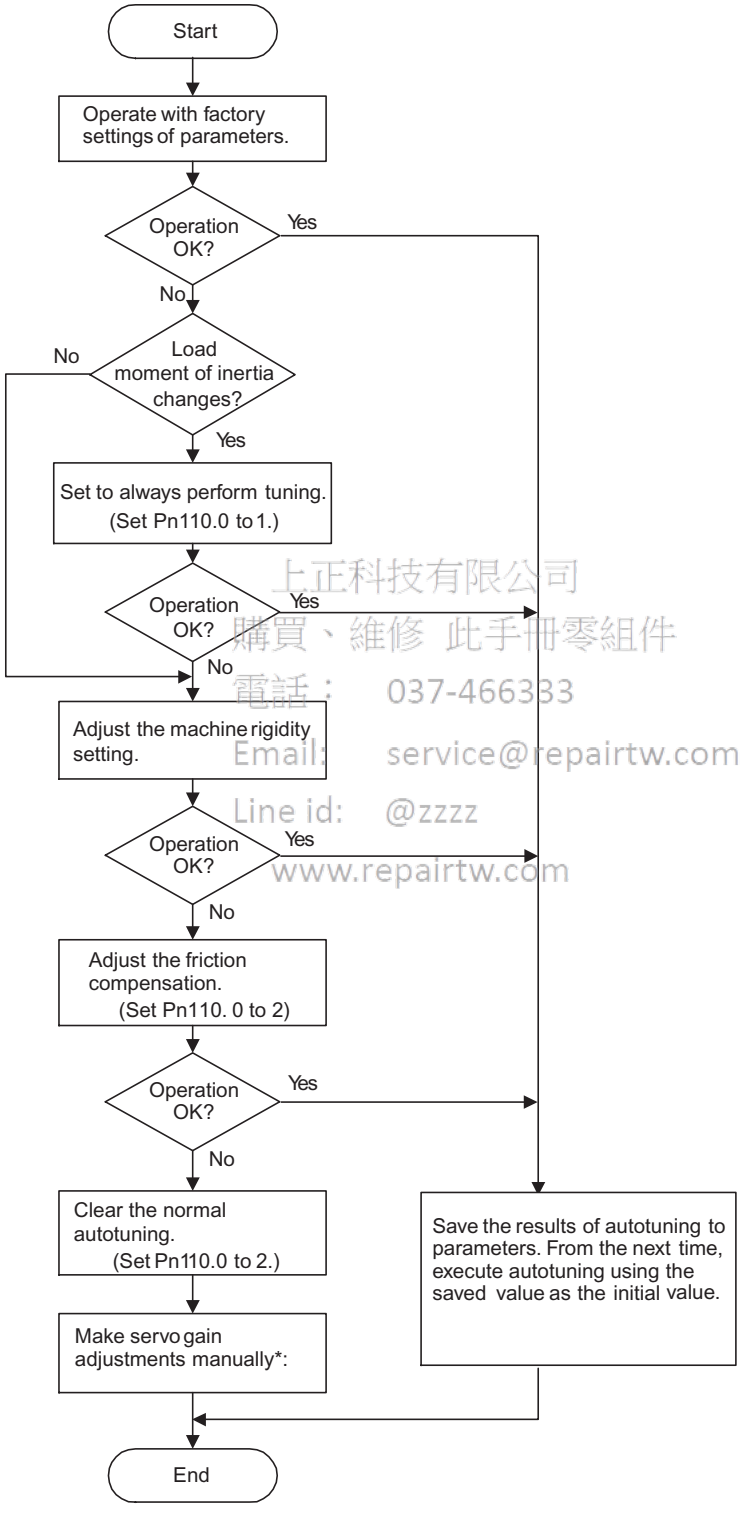

上正科技有限公司
購買、維修 此手冊零組件
電話： 037-466333
Email: service@repairtw.com
Line id: @zzzz
www.repairtw.com

(2) Machine Rigidity Settings for Normal Autotuning

For the machine rigidity settings at the time of normal autotuning, select the target values for speed loop gain and position loop gain of the servo system. Any of the following ten levels of rigidity can be selected.

Machine Rigidity Setting Fn001	Position Loop Gain [S^{-1}] Pn102	Speed Loop Gain [Hz] Pn100	Speed Loop Integral Time Constant [0.01ms] Pn101	Torque Reference Filter Time Constant [0.01ms] Pn401
1	15	15	6000	250
2	20	20	4500	200
3	30	30	3000	130
4	40	40	2000	100
5	60	60	1500	70
6	85	85	1000	50
7	120	120	800	30
8	160	160	600	20
9	200	200	500	15
10	250	250	400	10

Note: The rigidity value is factory-set to 4.

As the rigidity value is increased, the servo system loop gain increases and the time required for positioning is shortened. If the rigidity is excessively high, however, it may cause the machine to vibrate. In that case, decrease the set value.
The rigidity value setting automatically changes the parameters in the above table.

中崗技電股份有限公司
購買、維修 此手冊零組件
電話： 037-466333
Email: service@epantw.com
Line id: @zzzz
www.repairtw.com

INFO If parameters Pn102, Pn100, Pn101, and Pn401 are set manually with the normal autotuning function enabled, tuning is performed with the manually set values as target values.

- Changing the Machine Rigidity Setting

The machine rigidity setting is changed using the Adjusting command (ADJ: 3EH).
The procedure for making changes is shown below.

INFO The machine rigidity can be set also by changing the utility function Fn001 using a digital operator.

1. By setting byte 1 of the MECHATROLINK II command field to ADJ (3EH) and byte 2 to 00H, the following command field can be set.

	Command	Response	
5	CCMD	CANS	CCMD: Command CANS: Answer CADDRESS: Setting/reference address CDATA: Setting/reference data
6	CADDRESS	CADDRESS	
7			
8	CDATA	CDATA	
9			

2. Send the following data in each command field.
   Set “01H” (Data setting) in the CCMD field.
   Set “2010H” in the CADDRESS field.
   Set 1 to 10 in the CDATA field.
3. CMDRDY of STATUS is set to 1, and CADDRESS and CDATA of the response are confirmed to be the same as those of the command. It takes one second until CMDRDY is set to 1.

4. Use the following data to check when settings have been completed.
   Set “00H” (Data reference) in the CCMD field.
   Set “2010H” in the CADDRESS field.
5. Confirm that the response is correct and that CMDRDY or STATUS is set to 1. Confirm that the value of the CDATA field in the response field is the machine rigidity you set.
   If a response is returned with the rigidity setting that is being made, the rigidity setting has been completed.

This completes changing the machine rigidity setting using normal autotuning.

Note: A correct response satisfies the following conditions.

- CCMD in the command and CANS in the response are the same.
- CADDRESS is the same in the command and response. (When written, confirm that CDATA is the same in the command and response.)
- The alarm bits and warning bits in STATUS are 0.

(3) Saving Results of Normal Autotuning

Normal autotuning always processes the latest load moment of inertia to renew data so that the speed loop gain will reach the target value that has been set. When the SERVOPACK is turned OFF, all the processed data is lost. Therefore, when the SERVOPACK is turned ON again, normal autotuning is performed by processing the factory-set values in the SERVOPACK.

To save the results of normal autotuning and use them as the initial values set in the SERVOPACK when the SERVOPACK is turned ON again, it is necessary to save them according to the procedures for saving the results of normal autotuning. In this case, the inertia ratio set in parameter Pn103 can be changed.

On the basis of the rotor moment of inertia of the servomotor, the inertia ratio is expressed in percentage terms by the load moment of inertia. The value set in Pn103 is used to calculate the load moment of inertia at the time of normal autotuning.

上正科技有限公司
精買 維修 此手冊零組件
電話： 037-466333
Email: service@repairtw.com
Line id: @zzzz
www.repairtw.com

Pn103	Moment of Inertia Ratio			Position
	Setting Range	Setting Unit	Factory Setting	Setting Validation
	0 to 20000%	1%	0%	After restart

$$\text{Inertia ratio} = \frac{\text{Motor axis conversion load moment of inertia } (J_L)}{\text{Servomotor rotor moment of inertia } (J_M)} \times 100(\%)$$

The moment of inertia ratio is factory-set to 0%.

IMPORTANT

Before making servo gain adjustments manually, be sure to set the moment of inertia ratio in Pn103. If the moment of inertia ratio is incorrect, the speed loop gain (unit: Hz) set in Pn100 will be wrong.

- ### Procedure for Saving Results of Normal Autotuning

The Adjusting command (ADJ: 3EH) is used to save the results of normal autotuning.
The procedure for saving results is shown below.

INFO

The result of normal autotuning can also be saved by the utility function Fn007 using a digital operator.

1. By setting byte 1 of the MECHATROLINK II command field to ADJ (3EH) and byte 2 to 00H, the following command field can be set.

	Command	Response	
5	CCMD	CANS	CCMD: Command CANS: Answer CADDRESS: Setting/reference address CDATA: Setting/reference data
6	CADDRESS	CADDRESS	
7			
8	CDATA	CDATA	
9			

2. Send the following data in each command field.
   Set “01H” (Data setting) in the CCMD field.
   Set “2000H” in the CADDRESS field.
   Set “1007H” in the CDATA field.
3. CMDRDY of STATUS is set to 1, and CADDRESS and CDATA of the response are confirmed to be the same as those of the command.
   The Normal Autotuning Results Write Mode will be entered.
4. Continue by using the following data.
   Set “01H” (Data setting) in the CCMD field.
   Set “2001H” in the CADDRESS field.
   Set “01H” (Execute) in the CDATA field.
5. CMDRDY of STATUS is set to 1, and CADDRESS and CDATA of the response are confirmed to be the same as those of the command. It takes one second until CMDRDY is set to 1.

This completes saving the normal autotuning results.

上正科技有限公司
購買、維修 此手冊零組件
電話: 037-466333
Email: service@repairtw.com
Line Id: @2222
www.repairtw.com

(4) Parameters Related to Normal Autotuning

This section provides information on a variety of parameters related to normal autotuning.

- Normal Autotuning Method

The following parameter is used to set the autotuning conditions.

Parameter		Description
Pn110	n.□□□**0**	Autotuning is performed only when the system runs for the first time after the power is turned ON. After the load moment of inertia is calculated, the calculated data is not refreshed.
	n.□□□**1**	Autotuning is continuously performed (moment of inertia value calculation).
	n.□□□**2**	The normal autotuning function is not used.

This parameter is factory-set to “0.” If the load moment of inertia change is minimal or if the application makes few changes, there is no need to continue calculating the moment of inertia while the system is in operation. Instead, continue to use the value that was calculated when the system was first started up.

Set this parameter to “1” if the load moment of inertia always fluctuates due to the load conditions. Then the response characteristics can be kept stable by continuously refreshing the moment of inertia calculation data and reflecting them in the servo gain.

If the load moment of inertia fluctuation results within 200 ms, the moment of inertia calculation data may not be refreshed properly. If that happens, set Pn110.0 to “0” or “2.”

Set Pn110.0 to “2” if autotuning is not available or if the normal autotuning function is not used because the load moment of inertia is already known and the SERVOPACK is manually adjusted by setting the inertia ratio data in Pn103.

11.3.2 Absolute Encoder Setup (Initialization)

The Adjusting (ADJ: 3EH) command can be used to setup (initialize) the absolute encoder.
The setup procedure is outline below.

INFO

Be sure to turn the power OFF then ON again after the encoder setup of absolute encoder.

1. By setting byte 1 of the MECHATROLINK II command field to ADJ (3EH) and byte 2 to 00H, the following command field can be set.

	Command	Response	
5	CCMD	CANS	CCMD: Serial communications command CANS: Serial communications answer CADDRESS: Setting/reference address CDATA: Setting/reference data
6	CADDRESS	CADDRESS	
7			
8	CDATA	CDATA	
9			

2. Send the following data in each command field.
   Set “01H” (Data setting) in the CCMD field.
   Set “2000H” in the CADDRESS field.
   Set “1008H” in the CDATA field.
3. CMDRDY of STATUS is set to 1, and CADDRESS and CDATA of the response are confirmed to be the same as those of the command.
   The absolute encoder will enter the Setup Mode.
4. Continue by using the following data.
   Set “01H” (Data setting) in the CCMD field.
   Set “2001H” in the CADDRESS field.
   Set “02H” (Save) in the CDATA field.
5. CMDRDY of STATUS is set to 1, and CADDRESS and CDATA of the response are confirmed to be the same as those of the command.
6. Send the following data.
   Set “01H” (Data setting) in the CCMD field.
   Set “2001H” in the CADDRESS field.
   Set “01H” (Execute) in the CDATA field.
7. CMDRDY of STATUS is set to 1, and CADDRESS and CDATA of the response are confirmed to be the same as those of the command. It takes one second until CMDRDY is set to 1.

This completes setting up the absolute encoder. Turn the power OFF then ON again to confirm that the SERVOPACK will start up normally.

上正科技有限公司
購買、維修 此手冊零組件
電話： 07-7166833
Email: service@repairtw.com
Line id: @zzzz
www.repairtw.com

11.3.3 Multi-turn Limit Setting

The Adjusting command (ADJ: 3EH) can be used to set the multi-turn limit.

Use the following setting procedure.

INFO

Be sure to turn the power OFF then ON again after the multi-turn limit setting.

1. By setting byte 1 of the MECHATROLINK II command field to ADJ (3EH) and byte 2 to 00H, the following command field can be set.

	Command	Response	
5	CCMD	CANS	CCMD: Command CANS: Answer CADDRESS: Setting/reference address CDATA: Setting/reference data
6	CADDRESS	CADDRESS	
7			
8	CDATA	CDATA	
9			

2. Send the following data in each command field.
   Set “01H” (Data setting) in the CCMD field.
   Set “2000H” in the CADDRESS field.
   Set “1013H” in the CDATA field.
3. CMDRDY of STATUS is set to 1, and CADDRESS and CDATA of the response are confirmed to be the same as those of the command.
   The Multi-turn Limit Setting Mode will be entered.
4. Continue by using the following data.
   Set “01H” (Data setting) in the CCMD field.
   Set “2001H” in the CADDRESS field.
   Set “02H” (Save) in the CDATA field.
5. CMDRDY of STATUS is set to 1, and CADDRESS and CDATA of the response are confirmed to be the same as those of the command.
6. Send the following command.
   Set “01H” (Data setting) in the CCMD field.
   Set “2001H” in the CADDRESS field.
   Set “01H” (Execute) in the CDATA field.
7. CMDRDY of STATUS is set to 1, and CADDRESS and CDATA of the response are confirmed to be the same as those of the command. It takes one second until CMDRDY is set to 1.

This completes setting the multi-turn limit. Turn OFF the power and ON again to confirm that the SERVOPACK will start up normally.

上元科技有限公司
購買、維修 此手冊零組件
電話： 037-466333
Email: service@repairtw.com
Line Id: @zzzz
www.repairtw.com

11.3.4 Automatic Offset Adjustment of Motor Current Detection Signals

The offset adjustment of the motor current detection signals has already been made before shipping the product. Therefore, it is not necessary for the users to make any adjustment. Use the automatic offset adjustment only if the torque ripple due to current offset is considered abnormally high or the torque ripple needs to be reduced to achieve higher accuracy.

The adjustment procedure is outlined below.

INFO

The automatic adjustment is possible only when the Servo is set to OFF with the main circuit power turned ON.

1. By setting byte 1 of the MECHATROLINK II command field to ADJ (3EH) and byte 2 to 00H, the following command field can be set.

	Command	Response	
5	CCMD	CANS	CCMD: Command CANS: Answer CADDRESS: Setting/reference address CDATA: Setting/reference data
6	CADDRESS	CADDRESS	
7			
8	CDATA	CDATA	
9			

2. Send the following data in each command field.
   Set “01H” (Data setting) in the CCMD field.
   Set “2000H” in the CADDRESS field.
   Set “100EH” in the CDATA field.
3. CMDRDY of STATUS is set to 1, and CADDRESS and CDATA of the response are confirmed to be the same as those of the command.
   The automatic offset adjustment of motor current detection signals will be enabled.
4. Continue by using the following data.
   Set “01H” (Data setting) in the CCMD field.
   Set “2001H” in the CADDRESS field.
   Set “01H” (Execute) in the CDATA field.
5. CMDRDY of STATUS is set to 1, and CADDRESS and CDATA of the response are confirmed to be the same as those of the command. (It takes 1 second maximum until CMDRDY is set to 1.)

This completes setting up the automatic offset adjustment of the motor current detection signals.

上正科技有限公司
購買 維修 此手冊零組件
電話： 037-466333
Email: service@repairtw.com
Line Id: @zzzz
www.repairtw.com

11.4 Parameter Recording Table

Use the following table for recording parameters. Parameter changing method is as follows:

⦿: Can be changed at any time, and immediately validated after changing. (Called an online parameter.)

○: Can be changed when DEN=1. Immediately validated after changing. Do not change when DEN = 0. Doing so may lead to overrun (Called an offline parameter.)

Δ: Validated after a Set Up Device command is sent, when loading and using parameters at power ON. Also validated when turning OFF and then ON the power supply again after a Write Non-volatile Parameter (PPRM_WR) command is sent.

parameter No.	Factory Setting						Name	Changing Method
Pn000	0000						Function Selection Basic Switch 0	Δ
Pn001	0000						Function Selection Application Switch 1	Δ
Pn002	0000						Function Selection Application Switch 2	Δ
Pn004	0000						Function Selection Application Switch 4	Δ
Pn006	0002						Function Selection Application Switch 6	⦿
Pn007	0000						Function Selection Application Switch 7	⦿
Pn008	4000						Function Selection Application Switch 8	Δ
Pn100	40.0 Hz						Speed Loop Gain	⦿
Pn101	20.00 ms						Speed Loop Integral Time Constant	⦿
Pn102	40.0/s						Position Loop Gain	⦿
Pn103	0 %						Moment of Inertia Ratio	⦿
Pn104	40.0 Hz						2nd Speed Loop Gain	⦿
Pn105	20.00 ms						2nd Speed Loop Integral Time Constant	⦿
Pn106	40.0/s						2nd Position Loop Gain	⦿
Pn107	0 RPM						Bias	⦿
Pn108	7 reference units						Bias Addition Width	⦿
Pn109	0 %						Feed Forward Gain	⦿
Pn10A	0.00 ms						Feed Forward Filter Time Constant	⦿
Pn10B	0000						Gain Related Application Switch	Δ
Pn10C	200 %						Mode Switch (torque reference)	⦿
Pn10D	0 RPM						Mode Switch (speed reference)	⦿
Pn10E	0 RPM/s						Mode Switch (acceleration)	⦿
Pn10F	0 reference units						Mode Switch (error pulse)	⦿
Pn110	0012						Normal Autotuning Switches	Δ
Pn111	100 %						Speed Feedback Compensation Gain	⦿
Pn119	50.0/s						Reference Filter Gain	⦿
Pn11A	100.0 %						Reference Filter Gain Compensation	⦿
Pn11E	100.0 %						Reference Filter Bias (Forward)	⦿
Pn11F	0.0 ms						Position Integral Time Constant	⦿
Pn12B	40.0 Hz						3rd Speed Loop Gain	⦿
Pn12C	20.00 ms						3rd Speed Loop Integral Time Constant	⦿
Pn12D	40.0/s						3rd Position Loop Gain	⦿
Pn12E	40.0 Hz						4th Speed Loop Gain	⦿
Pn12F	20.00 ms						4th Speed Loop Integral Time Constant	⦿
Pn130	40.0/s						4th Position Loop Gain	⦿
Pn131	0 ms						Gain Switching Time 1	⦿
Pn132	0 ms						Gain Switching Time 2	⦿
Pn135	0 ms						Gain Switching Waiting Time 1	⦿

上正科技有限公司
購買、維修 此手冊零組件
電話： 037-466333
Email: service@repairtw.com
Line id: @zzzz
www.repairtw.com

parameter No.	Factory Setting						Name	Changing Method
Pn136	0 ms						Gain Switching Waiting Time 2	⦿
Pn139	0000						Automatic Gain Changeover Related Switch 1	Δ
Pn144	100.0 %						Reference Filter Bias (Reverse)	⦿
Pn150	0210						Predictive Control Selection Switch	Δ
Pn151	100 %						Predictive Control Acceleration/ Deceleration Gain	⦿
Pn152	100 %						Predictive Control Weighting Ratio	⦿
Pn1A0	60 %						Servo Rigidity	⦿
Pn1A1	60 %						Servo Rigidity #2	⦿
Pn1A2	0.72 ms						Speed Feedback Filter Time Constant	⦿
Pn1A3	0.72 ms						Speed Feedback Filter Time Constant #2	⦿
Pn1A4	0.36 ms						Torque Reference Filter Time Constant	⦿
Pn1A7	1121						Utility Control Switch	⦿
Pn1A9	37 Hz						Utility Integral Gain	⦿
Pn1AA	60 Hz						Position Proportional Gain	⦿
Pn1AB	0 Hz						Speed Integral Gain	⦿
Pn1AC	120 Hz						Speed Proportional Gain	⦿
Pn200	0100						Position Control Reference Form Selection Switch	Δ
Pn205	65535 Rev						Multi-turn Limit Setting	Δ
Pn207	0010						Position Reference Function Switch	Δ
Pn209	–						Reserved (Do not change)	–
Pn20A	32768 pitches/Rev						Number of External Scale Pitch	Δ
Pn20E	4						Electronic Gear Ratio (Numerator)	Δ
Pn210	1						Electronic Gear Ratio (Denominator)	Δ
Pn212	2048 P/Rev						PG Dividing Pulse (pulse input)	Δ
Pn214	0						Backlash Compensation Amount	⦿
Pn215	0.00ms						Backlash Compensation Time Constant	⦿
Pn216	–						Reserved (Do not change)	–
Pn217	–						Reserved (Do not change)	–
Pn280	0 μm						Linear Scale Pitch	Δ
Pn281	20 P/ (4 multi-ple pitches)						Encoder Output Resolution	Δ
Pn300	–						Reserved (Do not change)	–
Pn301	–						Reserved (Do not change)	–
Pn302	–						Reserved (Do not change)	–
Pn303	–						Reserved (Do not change)	–
Pn304	500 RPM						JOG Speed	⦿
Pn305	0 ms						Soft Start Acceleration Time	⦿
Pn306	0 ms						Soft Start Deceleration Time	⦿
Pn307	–						Reserved (Do not change)	–
Pn308	0.00 ms						Speed Feedback Filter Time Constant	⦿
Pn310	0000						Vibration Detection Switch	⦿
Pn311	100 %						Vibration Detection Sensibility	⦿
Pn312	50 RPM						Vibration Detection Level	⦿
Pn400	–						Reserved (Do not change)	–

上正科技有限公司
購買、維修 此手冊零組件
電話： 037-466333
Email: service@repairtw.com
Line id: @zzzz
www.repairtw.com

parameter No.	Factory Setting						Name	Changing Method
Pn401	1.00 ms						Torque Reference Filter Time Constant	⊙
Pn402	800 %						Forward Torque Limit	⊙
Pn403	800 %						Reverse Torque Limit	⊙
Pn404	100 %						Forward External Torque Limit	⊙
Pn405	100 %						Reverse External Torque Limit	⊙
Pn406	800 %						Emergency Stop Torque	⊙
Pn407	10000 RPM						Speed Limit during Torque Control	⊙
Pn408	0000						Torque Related Function Switch	Δ
Pn409	2000 Hz						1st Step Notch Filter Frequency	⊙
Pn40A	0.70						1st Step Notch Filter Q Value	⊙
Pn40C	2000 Hz						2nd Step Notch Filter Frequency	⊙
Pn40D	0.70						2nd Step Notch Filter Q Value	⊙
Pn40F	2000 Hz						2nd Step 2nd Torque Reference Filter Frequency	⊙
Pn410	0.70						2nd Step 2nd Torque Reference Filter Q Value	⊙
Pn411	0 µs						3rd Step Torque Reference Filter Time Constant	⊙
Pn412	1.00 ms						1st Step 2nd Torque Reference Filter Time Constant	⊙
Pn413	1.00 ms						1st Step 3rd Torque Reference Filter Time Constant	⊙
Pn414	1.00 ms						1st Step 4th Torque Reference Filter Time Constant	⊙
Pn420	100 %						Damping for Vibration Suppression on Stopping	⊙
Pn421	1000 ms						Vibration Suppression Starting Time	⊙
Pn422	0.00 %						Gravity Compensation Torque	⊙
Pn456	15 %						Sweep Torque Reference Amplitude	⊙
Pn501	10 RPM						Zero Clamp Level	⊙
Pn502	20 RPM						Zero Speed Level	⊙
Pn503	10 RPM						Speed Coincidence Signal Output Width	⊙
Pn506	0 ms						Brake Reference – Servo OFF Delay Time	⊙
Pn507	100 RPM						Brake Reference Output Speed Level	⊙
Pn508	500 ms						Waiting Time for Brake Signal When Motor Running	⊙
Pn509	20 ms						Instantaneous Power Cut Hold Time	⊙
Pn50A	1881						Input Signal Selection 1	Δ
Pn50B	8882						Input Signal Selection 2	Δ
Pn50C	8888						Input Signal Selection 3	Δ
Pn50D	8888						Input Signal Selection 4	Δ
Pn50E	0000						Output Signal Selection 1	Δ
Pn50F	0100						Output Signal Selection 2	Δ
Pn510	0000						Output Signal Selection 3	Δ
Pn511	6543						Input Signal Selection 5	Δ
Pn512	0000						Output Signal Reversal Setting	Δ
Pn515	8888						Input Signal Selection 5	Δ
Pn51B	1000 reference units						Excessive Error Level between Motor and Load Position	⊙

上正科技有限公司
購買、維修 此手冊零組件
電話： 037-466333
Email: service@repairtw.com
Line id: @zzzz
www.repairtw.com

parameter No.	Factory Setting						Name	Changing Method
Pn51E	100%						Excessive Position Error Warning Level	⦿
Pn520	262144 reference units						Excessive Position Error Alarm Level	⦿
Pn522	7 reference units						Positioning Completion Width	⦿
Pn524	1073741824 reference units						NEAR Signal Width	⦿
Pn526	262144 reference units						Excessive Position Error Alarm Level at Servo ON	⦿
Pn528	100 %						Excessive Position Error Warning Detection Level at Servo ON	⦿
Pn529	10000 RPM						Speed Limit Level at Servo ON	⦿
Pn52A	20 %						Multiple Value per Fully Closed Encoder Rotation	⦿
Pn52F	FFF						Monitor Display at Power ON	⦿
Pn530	0000						Program JOG Operation Related Switch	⦿
Pn531	32768 reference units						Program JOG Movement Distance	⦿
Pn533	500 RPM						Program JOG Movement Speed	⦿
Pn534	100 ms						Program JOG Acceleration/ Deceleration Time	⦿
Pn535	100 ms						Program JOG Waiting Time	⦿
Pn536	one time						Number of Times of Program JOG Movement	⦿
Pn540	200.0 Hz						Gain Limit	⦿
Pn550	0.0 V						Analog Monitor 1 Offset Voltage	⦿
Pn551	0.0 V						Analog Monitor 2 Offset Voltage	⦿
Pn600	0 W						Regenerative Resistor Capacity	⦿
Pn800	0400						Communication Control	⦿
Pn801	0003						Function Selection Application 6 (Software LS)	⦿
Pn803	10 reference units						Origin Range	⦿
Pn804 Pn805	8192*99999 reference units						Forward Software Limit	⦿
Pn806 Pn807	-8192*99999 reference units						Reverse Software Limit	⦿
Pn808 Pn809	0 reference units						Absolute Encoder Origin Offset	⦿
Pn80A	100						1st Step Linear Acceleration Constant	○
Pn80B	100						2nd Step Linear Acceleration Constant	○
Pn80C	0						Acceleration Constant Switching Speed	○
Pn80D	100						1st Step Linear Deceleration Constant	○
Pn80E	100						2nd Step Linear Deceleration Constant	○
Pn80F	0						Deceleration Constant Switching Speed	○
Pn810	0						Exponential Function Accel/Decel Bias	○
Pn811	0						Exponential Function Accel/Decel Time Constant	○
Pn812	0						Moving Average Time	○

上正科技有限公司
購買、維修 此手冊零組件
電話： 037-466333
Email: service@repairtw.com
Line id: @zzzz
www.repairtw.com

parameter No.	Factory Setting						Name	Changing Method
Pn814 Pn815	100 reference units						Final Travel Distance for External Positioning (EX_POSING)	○
Pn816	0000						Homing Mode Setting	○
Pn817	50						Homing Approach Speed 1	○
Pn818	5						Homing Approach Speed 2	○
Pn819 Pn81A	100 reference units						Final Travel Distance for homing	○
Pn81D	–						Reserved (Do not change)	–
Pn81E	0000						Input Signal Monitor Selection	⦿
Pn820 Pn821	0 reference units						Latching Area Upper Limit	⦿
Pn822 Pn823	0 reference units						Latching Area Lower Limit	⦿
Pn824	0000						Option Monitor 1 Selection	⦿
Pn825	0000						Option Monitor 2 Selection	⦿

上正科技有限公司
購買、維修 此手冊零組件
電話： 037-466333
Email: service@repairtw.com
Line id: @zzzz
www.repairtw.com

Index

Symbols

/BK signal 7–32

Numerics

400V power supply voltage 5–23

A

a voltage conversion transfer 5–23
absolute encoder
setup (initialization) 11–43
absolute encoder battery 4–11
absolute encoder zero point position offset 7–37
absorbable energy 11–10
AC/DC reactor for harmonic suppression 5–24
AC/DC reactors
selection 2–26
specifications and external dimensions 4–18
acceleration/deceleration function 7–18
ADJ 6–40, 11–38
adjusting 6–40
adjusting command 11–38
advanced autotuning 8–13
alarm display and troubleshooting 10–7
alarm display table 10–3
alarm reset 10–3
ALM 5–11
ALM_CLR 6–13
ALM_RD 6–11, 6–45
aluminum electrolytic capacitor replacement . . . 10–25
ambient/storage humidity 3–2
ambient/storage temperature 3–2
analog monitor 7–28, 8–50
analog monitor cable 2–23
apply brake 6–20
automatic offset adjustment of motor current detection
signals 11–45
autotuning 11–38
autotuning functions 8–4
axis end specifications, servomotors 1–4

B

ball screw pitch 7–15
ball screws 7–17
base-mounted type 3–20
battery case 4–11
battery installed on the host controller end 4–11
baud rate 6–4
belts and pulleys 7–17
BK 5–11
brake interlock signal 5–11
BRK_OFF 6–21
BRK_ON 6–20
built-in regenerative resistor 5–25

上正科技有限公司
購買、維修此手冊零組件
電話： 037-466333
Email: service@repairtw.com
Line id: @yzzz
www.repairtw.com

C

cable length 5–14
cable selection
SGMAS and SGMPS servomotors 2–7
SGMCS servomotor 2–20
SGMSS servomotor 2–12
cable types 4–2
cable with connectors at both ends for fully-closed control 4–20
cables
CN1 cables for I/O signal 4–7
cables for analog monitor 4–8
capacity
servomotors 1–4
CE marking 1–10
checking products 1–2
circular tables 7–17
clear alarm/warning 6–13
CLT 5–11
CN1 cables for I/O signals 4–7
CN1 terminal layout 5–10
CN2 terminal layout 5–8
CN6A terminal layout 5–14
CN6B terminal layout 5–14
cnnecting an encoder 5–7
COIN 5–11
command data execution timing 6–55
command data field 6–49
communication cable 2–23, 4–19
communications connectors 5–14
communications settings 6–4
CONFIG 6–10
CONNECT 6–15, 6–43
connection cable between SERVOPACK and serial converter unit 9–7
connection cable for serial converter unit 2–24
connection example of linear scale by Heidenhain 5–16
connection example of linear scale by Renishaw . 5–17
constant speed feed 6–32
continuous output current 3–2
control power input terminal 5–2
cooling fan replacement 10–25
CSA standards 1–10

D

DC power supply input 5–6
DC reactor terminal connection 5–2
debug function 7–28
DEC 5–10
deceleration ratio 7–15
details of ALM_CLR_MOD 6–13
details of ALM_RD_MOD 6–11
details of COM_MOD 6–15, 6–43
details of DEVICE_COD 6–9
details of PS_SUBCMD 6–19
digital operator 2–23, 4–8
DISCONNECT 6–16
disconnection 6–16
dynamic brake 7–29

E

electronic gear 3–3, 7–14
electronic gear ratio 7–16
electronic gear ratio (denominator) 7–16
electronic gear ratio (numerator) 7–16
examples 7–17
setting 7–15
emergency stop torque 7–10
encoder cable for fully-closed control 2–24
encoders
selection 7–33
setup 7–33
EX_POSING 6–34
EXT1 to EXT3 5–10
external I/O power supply input 7–13
external input positioning 6–34
external latch signals 1,2, and 3 5–10
external regenerative resistor 4–9
external regenerative resistors 5–25

F

FEED 6–32
feed-forward reference 8–23
FG 5–11
forward overtravel 7–8
forward reference 7–8
forward run prohibited (forward overtravel) 7–9
forward run prohibited signal 5–10
frequency characteristics 3–2
fully-closed control
analog signal input timing 9–4
connection example of linear scale by Heidenhain 9–5
connection example of linear scale by Renishaw . .

上正科技有限公司
購買、維修此手冊零組件
電話： 037-466333
Email: service@repairtw.com
Line id: @zzzz
www.repairtw.com

9–6
internal configuration 9–8
parameters 9–9
serial coverter unit 9–3
system configuration 9–2
fully-closed encoder connections 5–16
fuse capacity 2–25
fuse replacement 10–25

G

general-purpose output signal 5–11
general-purpose servo control 6–41
ground terminal 4–2
ground terminals 5–2
grounding 5–19

H

HOLD 6–24
holding brake 7–30
brake ON timing 7–31
setting 7–32
wiring example 7–30
homing 6–36
homing deceleration limit switch signal 5–10

I

I/O signal
names and functions 5–10
I/O signal cables 2–23
ID_RD 6–9
input power supply 3–2
input signals 5–10
enabling/disabling input signals 7–9
input circuit signal allocation 7–23
input signal selections 7–24
inspection
procedure 10–24
inspection and maintenance 10–24
INTERPOLATE 6–30
interpolation feed 6–30
interpolation feeding with position detection 6–33
IO monitor field 6–53
IO_MON 6–53

L

LATCH 6–33
latch signal field 6–49
less deviation control 8–40
line driver output circuit 5–11
load moment of inertia 3–14, 11–38
load regulation 3–2
LT_SGN 6–41, 6–49
LTMOD_OFF 6–26, 6–47
LTMOD_ON 6–25, 6–47

M

machine rigidity
changing 11–40
machine rigidity setting 8–10, 11–40
magnetic contactors
selection 2–26
specifications and external dimensions 4–16
main circuit
names and descriptions 5–2
wiring examples 5–4
main circuit input terminal 5–2
main circuit power input terminals 4–2
main circuit terminal 5–2
main commands 6–6
manual tuning 8–20
max. output current 3–2
MECHATROLINK communication cable . 2–23, 4–19
MECHATROLINK communications connectors . 5–14
MECHATROLINK connection 6–43
MECHATROLINK-II communication cable 2–23, 4–19
MECHATROLINK-II connection 6–15
minimum parameters and input signals 7–6
mode switch (P/PI switching) 8–24
model numbers
servomotors 1–4
molded-case circuit breaker (MCCB) 2–25, 4–12
moment of inertia 11–38, 11–41, 11–42
MONITOR 6–52
monitor codes 6–52
monitor data input timing 6–55
monitor selection and monitor information field specifications 6–52
monitoring 7–28
MOTION 6–42
motion settings 7–21
motor speed 3–15
multiturn limit setting 7–35, 11–44

上正科技有限公司
購買、維修 此手冊零組件
電話： 037-466333
Email: service@repairtw.com
Line id: @zzzz
www.repairtw.com

N

NEAR 5–11
Need 1.5 3–12
no operation 6–6, 6–44
noise filters
precautions on installation 5–20
selection 2–26
specifications and external dimensions 4–13
noise interference 5–18
NOP 6–6, 6–44
normal autotuning 8–7
machine rigidity setting 8–10, 11–40
method 11–42
parameters 11–42
saving results 11–41
saving the results 8–12
setting parameters 11–39
north american safety standards 1–10
N-OT 5–10
notch filter 8–47
number of encoder pulses 7–15
number of slaves 3–4
number of stations 5–14, 6–4
number of words for link transmission 3–4

O

one-parameter autotuning 8–18
one-parameter tuning for less deviation control . . 8–40
operation sequence 6–56
operation sequence at emergency stop (main circuit OFF) 6–58
operation sequence when being servo ON 6–58
operation sequence when overtravel limit switch signal is input 6–58
OPTION 6–50
option field 6–50
option monitor 7–28
output circuit interface 5–11
output signal connections 7–14
output signals 5–11
output circuit signal allocation 7–26
output signal selections 7–26
overload characteristics 3–13
overshooting 8–24
overtravel limit function
overtravel limit switch 7–9
setting the overtravel limit function 7–8
overtravel prevension signal 5–10

P

parameter
digits settings 7–3
parameter list 11–11
parameters 7–23
setting validation 11–12
peripheral device selection 2–23
peripheral devices 4–8
photocoupler output circuit 5–12
POS_SET 6–19
POSING 6–31
position integral 8–49
position loop gain 8–21, 11–40
positioning 6–31
positioning time reduction functions 8–5
P-OT 5–10
power loss 3–12
power supply capacity 3–12
power supply capacity per SERVOPACK 2–25
PPRM_RD 6–17, 6–46
PPRM_WR 6–18, 6–46
precautions for wiring MECHATROLINKI cables 5–14
predictive control 8–35
predictive control for locus tracking 8–35
predictive control for positioning 8–35
PRM_RD 6–7, 6–44
PRM_WR 6–8, 6–45
product part names 1–3
proportional (P) control 8–24
proportional/integral (PI) control 8–24

Q

Q value 8–47

上正科技有限公司
購買、維修 此手冊零組件
電話： 037-466333
Email: service@repairtw.com
Line Id: @zzzz
www.repairtw.com

R

reactors 4–18
connecting a reactor 5–24
selection 2–26
types 5–24
read alarm or warning 6–11, 6–45
read ID 6–9
read non-volatile parameter 6–17, 6–46
read parameter 6–7, 6–44
reference unit 7–15
regenerative resistor capacity 5–26
regenerative resistor terminal 5–2
regenerative resistors 5–25
calculating the required capacity 11–6
selection 2–27
relays replacement 10–25
release brake 6–21
release latch mode 6–26, 6–47
request latch mode 6–25, 6–47
response timing 6–55
reverse overtravel 7–8
reverse reference 7–8
reverse rotation mode 7–8
reverse run prohibited signal 5–10
reverse run prohibited(reverse overtravel) 7–9

上正科技有限公司
購買、維修此手冊零組件
電話： 037-466333
Email: service@repairtw.com
Line id: @zzzz
www.repairtw.com

S

SEL_MON 6–52
select latch signal 6–41
select motion 6–42
selecting cables 2–7
selecting the speed loop control method (PI Control or IP Control) 8–22
SENS_OFF 6–23
SENS_ON 6–22
sequence I/O signals 7–13
sequence input circuit interface 5–11
sequence signals 6–42
serial converter unit . . 2–24, 5–16, 5–17, 9–3, 9–5, 9–6
serial converter unit for fully-closed control 4–20
serial encoders 1–4
servo alarm output (ALM) 10–3
servo alarm signal 5–11
Servo Amplifiers
  product part names 1–5
servo gain
  adjustment methods 8–3
  explanation 8–20
servo OFF 6–29
servo OFF stop mode selection 7–11
servo OFF timing when breaking 7–31
servo ON 6–28
servo system configurations 1–6
servomotor connection terminals 5–2
servomotor inspection 10–24
servomotor stop method 10–3
servomotor stop mode 7–10
servomotors
  axis end specifications 1–4
  capacity 1–4
  capacity selection examples 11–2
  model designations 2–2
  model numbers 1–4
  nameplate 1–2
  product part names 1–3
  winding resistance loss 11–9
servomotors with brakes 7–6
SERVOPACK inspection 10–24
SERVOPACK main circuit wire size 4–2
SERVOPACK part replacement schedule 10–25
SERVOPACK power supply connector 4–4
SERVOPACKs
  applicable servomotors 2–6
  dimensional drawings 3–20
  installation 3–5
  internal block diagrams 3–7
  load moment of inertia 3–13
  model designations 2–5
  nameplate 1–3
  overload characteristics 3–13
  power losses 3–12
  ratings and specifications 3–2
set coordinates 6–19
set up device 6–10
setting reverse rotation mode 7–8
setting stop functions 7–29
setting the speed bias 8–28
setting the station address 6–5
setting the transmission cycle 6–4
SMON 6–27, 6–48
smoothing capacitor replacement 10–25
SO1 5–11
SO2 5–11
SO3 5–11
software limit 7–12
  software limit check using references 7–12
software limit function 7–11
speed control range 3–2
speed feedback compensation 8–28
speed feedback filter time constant 8–28
speed loop gain 8–22, 11–40
speed loop integral time constant 8–22, 11–40
speed regulation 3–2
SQ_CMD 6–42
S-RDY 5–11
standard replacement period 10–25
start synchronous communications 6–14
starting time 3–13
station address 6–4
STATUS 6–51
status and output signal during CONFIG command execution 6–10
status field 6–51
status monitoring 6–27, 6–48
step response convergence time 8–10
stop motion 6–24
stopping time 3–13
subcommands 6–44
sub-control 6–41
SUBCTRL 6–41
SUBSTATUS 6–54
substatus field 6–54
surge protector 4–17
surge protectors
  selection 2–26
SV_OFF 6–29
SV_ON 6–28
SVCTRL 6–41
switches for MECHATROLINK-II communications settings 6–4
switching gain settings 8–30
switching servomotor rotation direction 7–8
SYNC_SET 6–14

上正科技有限公司
購買、維修此手冊零組件
電話： 037-466333
Email: service@repairtw.com
Line id: @zzzz
www.repairtw.com

T

temperature regulation 3–2
temperature-resistant vinyl cable 4–2
terminal processing 5–15
terminating multiple axis connections 5–13
terminator 4–19
terminators 2–23
TGON 5–11
torque control 6–39
torque control tolerance 3–2
torque reference filter 8–46
torque reference filter time constant 11–40
transmission bytes 5–14, 6–4
transmission cycle 3–4, 5–14
transmission speed 3–4
travel distance per load shaft revolution 7–15
trial operation 7–4
troubleshooting 10–2
troubleshooting for malfunction without alarm display 10–20
troubleshooting of alarm 10–7
troubleshooting of warning 10–7
TRQCTRL 6–39
turn sensor OFF 6–23
turn sensor ON 6–22

U

UL standards 1–10
undershooting 8–24
using more than one SERVOPACK 5–22

V

V-CMP 5–11
VELCTRL 6–38
velocity control 6–38
vibration reduction functions 8–6
vibration suppression on stopping 8–48
vibration/shock resistance 3–2
vinyl cable 4–2
VLT 5–11
voltage regulation 3–2
voltage resistance test 3–6

W

WARN 5–11
warning display and troubleshooting 10–18
warning displays 10–6
winding resistance loss 11–9
wiring absolute encoders 5–7
wiring for noise control 5–19
wiring incremental encoders 5–7
wiring main circuit terminal block 5–3
wiring MECHATROLINK communications 5–13
wiring precautions 5–18
write non-volatile parameter 6–18, 6–46
write parameter 6–8, 6–45

Z

ZRET 6–36

上正科技有限公司
購買、維修此手冊零組件
電話： 037-466333
Email: service@repairtw.com
Line id: @zzzz
www.repairtw.com

上正科技有限公司
購買、維修 此手冊零組件
電話： 037-466333
Email: service@repairtw.com
Line id: @zzzz
www.repairtw.com

YASKAWA

A World of Automation Solutions™

YASKAWA ELECTRIC AMERICA, INC.
Chicago-Corporate Headquarters 2121 Norman Drive South, Waukegan, IL 60085, U.S.A.
Phone: (847) 887-7000 Fax: (847) 887-7310 Internet: http://www.yaskawa.com

MOTOMAN INC.
805 Liberty Lane, West Carrollton, OH 45449, U.S.A.
Phone: (937) 847-6200 Fax: (937) 847-6277 Internet: http://www.motoman.com

YASKAWA ELECTRIC CORPORATION
New Pier Takeshiba South Tower, 1-16-1, Kaigan, Minatoku, Tokyo, 105-0022, Japan
Phone: 81-3-5402-4511 Fax: 81-3-5402-4580 Internet: http://www.yaskawa.co.jp

YASKAWA ELETRICO DO BRASIL COMERCIO LTDA.
Avenida Fagundes Filho, 620 Bairro Saude Sao Paolo-SP, Brasil CEP: 04304-000
Phone: 55-11-5071-2552 Fax: 55-11-5581-8795 Internet: http://www.yaskawa.com.br

YASKAWA ELECTRIC EUROPE GmbH
Am Kronberger Hang 2, 65824 Schwalbach, Germany
Phone: 49-6196-569-300 Fax: 49-6196-888-301 Internet: http://www.yaskawa.de

MOTOMAN ROBOTICS AB
Box 504 S38525, Torsas, Sweden
Phone: 46-486-48800 Fax: 46-486-41410 Internet: http://www.motoman.se

MOTOMAN ROBOTEC GmbH
Kammerfeldstraβe 1, 85391 Allershausen, Germany
Phone: 49-8166-900 Fax: 49-8166-9039 Internet: http://www.motoman.de

YASKAWA ELECTRIC UK LTD.
1 Hunt Hill Orchardton Woods Cumbernauld, G68 9LF, Scotland, United Kingdom
Phone: 44-12-3673-5000 Fax: 44-12-3645-8182 Internet: http://www.yaskawa.co.uk

YASKAWA ELECTRIC KOREA CORPORATION
Paik Nam Bldg. 901 188-3, 1-Ga Euljiro, Joong-Gu, Seoul, Korea
Phone: 82-2-776-7844 Fax: 82-2-753-2639

YASKAWA ELECTRIC (SINGAPORE) PTE. LTD.
Head Office: 151 Lorong Chuan, #04-01, New Tech Park Singapore 556741, SINGAPORE
Phone: 65-282-3003 Fax: 65-289-3003

TAIPEI OFFICE (AND YATEC ENGINEERING CORPORATION)
10F 146 Sung Chiang Road, Taipei, Taiwan
Phone: 886-2-2563-0010 Fax: 886-2-2567-4677

YASKAWA JASON (HK) COMPANY LIMITED
Rm. 2909-10, Hong Kong Plaza, 186-191 Connaught Road West, Hong Kong
Phone: 852-2803-2385 Fax: 852-2547-5773

BEIJING OFFICE
Room No. 301 Office Building of Beijing International Club,
21 Jianguomanwai Avenue, Beijing 100020, China
Phone: 86-10-6532-1850 Fax: 86-10-6532-1851

SHANGHAI OFFICE
27 Hui He Road Shanghai 200437 China
Phone: 86-21-6553-6600 Fax: 86-21-6531-4242

SHANGHAI YASKAWA-TONJI M & E CO., LTD.
27 Hui He Road Shanghai 200437 China
Phone: 86-21-6533-2828 Fax: 86-21-6553-6677 Internet: http://www.yaskawa-tongji.com

BEIJING YASKAWA BEIKE AUTOMATION ENGINEERING CO., LTD.
30 Xue Yuan Road, Haidian, Beijing 100083 China
Phone: 86-10-6232-9943 Fax: 86-10-6234-5002

SHOUGANG MOTOMAN ROBOT CO., LTD.
7, Yongchang-North Street, Beijing Economic & Technological Development Area,
Beijing 100076 China
Phone: 86-10-6788-0551 Fax: 86-10-6788-2878

YEA, TAICHUNG OFFICE IN TAIWAIN
B1, 6F, No.51, Section 2, Kung-Yi Road, Taichung City, Taiwan, R.O.C.
Phone: 886-4-2320-2227 Fax:886-4-2320-2239

上正科技有限公司
銷售 維修 電子冊零組件
電話 037-466333
Email: service@repairtw.com
Line id: @zzzz
www.repairtw.com

Yaskawa Electric America, Inc., January, 2005

Printed In U.S.A .YEA-SIA-S800-11