Changes for the Better

MITSUBISHI ELECTRIC

CNC
MELDAS INTELLIGENT SERVOMOTOR HS Series

SPECIFICATIONS AND INSTRUCTION MANUAL

上正科技有限公司
購買、維修 此手冊零組件
電話： 037-466333
Email: service@repairtw.com
Line id: @zzzz
www.repairtw.com

BNP-B3981*(ENG)

Introduction

Thank you for purchasing the Mitsubishi CNC.
This instruction manual describes the handling and caution points for using this CNC.
Incorrect handling may lead to unforeseen accidents, so always read this instruction manual thoroughly to ensure correct usage.
Make sure that this instruction manual is delivered to the end user.

Precautions for safety

Please read this instruction manual and auxiliary documents before starting installation, operation, maintenance or inspection to ensure correct usage. Thoroughly understand the device, safety information and precautions before starting operation.

The safety precautions in this instruction manual are ranked as "DANGER" and "CAUTION".

DANGER	When a dangerous situation may occur if handling is mistaken leading to fatal or major injuries.
CAUTION	When a dangerous situation may occur if handling is mistaken leading to medium or minor injuries, or physical damage.

Note that some items described as **CAUTION** may lead to major results depending on the situation. In any case, important information that must be observed is described.

上軍科技有限公司
購買、維修 此手冊零組件
電話： 037-466333
Email: service@repairtw.com
Line Id: @2222
www.repairtw.com

The signs indicating prohibited and mandatory items are described below.

	This sign indicates that the item is prohibited (must not be carried out). For example, is used to indicate "Fire Prohibited".
	This sign indicates that the item is mandatory (must be carried out). For example, is used to indicate grounding.

After reading this instruction manual, keep it in a safe place for future reference.

POINT	In this manual, this mark indicates important matters the operator should be aware of when using the CNC.

For Safe Use

1. Electric shock prevention

DANGER
Wait at least 10 minutes after turning the power OFF, check the voltage between L1-L2-L3 and L11-L12 terminals with a tester, etc., before starting wiring or inspections. Failure to observe this could lead to electric shocks.
Ground the servo amplifier and servomotor with Class 3 grounding or higher.
Wiring and inspection work must be done by a qualified technician.
Wire the servo amplifier and servomotor after installation. Failure to observe this could lead to electric shocks.
Do not touch the switches with wet hands. Failure to observe this could lead to electric shocks.
Do not damage, apply forcible stress, place heavy items or engage the cable. Failure to observe this could lead to electric shocks.

上正科技有限公司
購買、維修 此手冊零組件
電話： 037-466333
Email: service@repairtw.com
Line id: @zzzz
www.repairtw.com

2. Fire prevention

CAUTION
Install the servo amplifier, servomotor and regenerative resistor on noncombustible material. Direct installation on combustible material or near combustible materials could lead to fires.
Following the instructions in this manual, always install no-fuse breakers and contactors on the servo amplifier power input. Select the correct no-fuse breakers and contactors using this manual as a reference. Incorrect selection could lead to fires.
Shut off the main circuit power at the contactors to emergency stop when an alarm occurs.

3. Injury prevention

⚠ CAUTION
Do not apply a voltage other than that specified in Instruction Manual on each terminal. Failure to observe this item could lead to ruptures or damage, etc.
Do not mistake the terminal connections. Failure to observe this item could lead to ruptures or damage, etc.
Do not mistake the polarity(⊕ ,⊖) . Failure to observe this item could lead to ruptures or damage, etc.
Do not touch the servo amplifier fins, regenerative resistor or servomotor, etc., while the power is turned ON or immediately after turning the power OFF. Some parts are heated to high temperatures, and touching these could lead to burns.

4. Various precuations

Observe the following precautions. Incorrect handling of the unit could lead to faults, injuries and electric shocks, etc.

上正科技有限公司
購買、維修 此手冊零組件
電話： 037-466333
Email: service@repairtw.com
Line id: @zzzz
www.repairtw.com

(1) Transportation and installation

⚠ CAUTION
Correctly transport the product according to its weight.
Do not stack the products above the tolerable number.
Do not hold the cables, axis or detector when transporting the servomotor.
Follow this Instruction Manual and install the unit in a place where the weight can be borne.
Do not get on top of or place heavy objects on the unit.
Always observe the installation directions.
Do not install or run a servo amplifier or servomotor that is damaged or missing parts.
Do not let conductive objects such as screws or metal chips, etc., or combustible materials such as oil enter the servo amplifier or servomotor.
The servo amplifier and servomotor are precision devices, so do not drop them or apply strong impacts to them.

⚠ CAUTION

⚠ Store and use the units under the following environment conditions.

Environment	Conditions		
	Servomotor		Interface unit
Ambient temperature	0°C to +40°C (with no freezing)		0°C to +55°C (with no freezing)
Ambient humidity	80% RH or less (with no dew condensation)		90%RH or less (with no dew condensation)
Storage temperature	–15°C to +65°C (with no freezing)		–20°C to +65°C (with no freezing)
Storage humidity	90% RH or less (with no dew condensation)		
Atmosphere	Indoors (Where unit is not subject to direct sunlight) With no corrosive gas, combustible gas, oil mist or dust.		
Altitude	1000m or less above sea level		
Vibration	HS-RF HS-SF (1kW or less)	X: 9.8m/sec^2 (1G) Y: Y: 24.5m/sec^2 (2.5G) or less	5.9m/sec^2 (0.6G) or less
	HS-SF (2.0kW or less)	X: 19.6m/sec^2 (2G) Y: 49m/sec^2 (5G) or less	
	HS-MF	X: 19.6m/sec^2 (2G) Y: 19.6m/sec^2 (2G) or less	

上正科技有限公司 購買、維修伺服系統零組件 電話：037-466333 Email: service@repairtw.com Line id: @zzzz www.repairtw.com

⚠ Securely fix the servomotor to the machine. Insufficient fixing could lead to the servomotor deviating during operation.

⚠ Never touch the rotary sections of the servomotor during operations. Install a cover, etc., on the shaft.

⚠ When coupling to a servomotor shaft end, do not apply an impact by hammering, etc. The detector could be damaged.

⚠ Do not apply a load exceeding the tolerable load onto the servomotor shaft. The shaft could break.

❗ When storing for a long time, please contact your dealer.

(2) Wiring

⚠ CAUTION
⚠ Correctly and securely perform the wiring. Failure to do so could lead to runaway of the servomotor.

(3) Trial operation and adjustment

⚠ CAUTION
⚠ Check and adjust each parameter before starting operation. Failure to do so could lead to unforeseen operation of the machine.
⚠ Do not make remarkable adjustments and changes as the operation could become unstable.

上正科技有限公司
購買、維修 此手冊零組件
電話： 037-466333
Email: service@repairtw.com
Line id: @222
www.repairtw.com

(4) Usage methods

⚠ CAUTION
⚠ Install an external emergency stop circuit so that the operation can be stopped and power shut off immediately.
⚠ Unqualified persons must not disassemble or repair the unit.
⚠ Never make modifications.
⚠ Reduce magnetic interference by installing a noise filter. The electronic devices used near the servo amplifier could be affected by magnetic noise. Install a line noise filter, etc., when there is an influence from magnetic interference.
⚠ Always use the servomotor and servo amplifier with the designated combination.
⚠ The servomotor's magnetic brakes are for holding purposes. Do not use them for normal braking.
⚠ There may be cases when holding is not possible due to the magnetic brake's life or the machine construction (when ball screw and servomotor are coupled via a timing belt, etc.). Install a stop device to ensure safety on the machine side.

(5) Troubleshooting

⚠ CAUTION

⚠ If a hazardous situation is predicted during stop or product trouble, use a servomotor with magnetic brakes or install an external brake mechanism.

⚠ Use a double circuit configuration that allows the operation circuit for the magnetic brakes to be operated even by the external emergency stop signal.

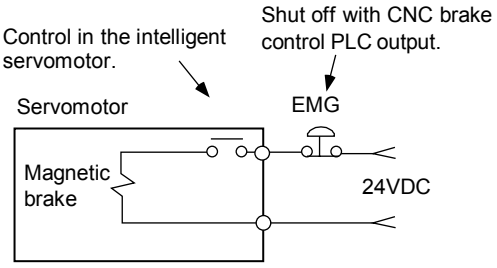

⚠ If an alarm occurs, remove the cause and secure the safety before resetting the alarm.

⚠ Never go near the machine after restoring the power after a failure, as the machine could start suddenly.
(Design the machine so that personal safety can be ensured even if the machine starts suddenly.)

上正科技有限公司
購買、維修 此手冊零組件
電話： 037-466333
Email: service@spirtw.com
Line id: @zzzz
www.spirtw.com

(6) Maintenance, inspection and part replacement

⚠ CAUTION

⚠ The capacity of the electrolytic capacitor will drop due to deterioration. To prevent secondary damage due to failures, replacing this part every ten years when used under a normal environment is recommended. Contact the nearest dealer for repair and replacement of parts.

(7) Disposal

⚠ CAUTION

⚠ Treat this unit as general industrial waste.

(8) General precautions

⚠ CAUTION

⚠ The drawings given in this Specifications and Maintenance Instruction Manual show the covers and safety partitions, etc., removed to provide a clearer explanation. Always return the covers or partitions to their respective places before starting operation, and always follow the instructions given in this manual.

Compliance to European EC Directives

1. European EC Directives

The European EC Directives were issued to unify Standards within the EU Community and to smooth the distribution of products of which the safety is guaranteed. In the EU Community, the attachment of a CE mark (CE marking) to the product being sold is mandatory to indicate that the basic safety conditions of the Machine Directives (issued Jan. 1995), EMC Directives (issued Jan. 1996) and the Low-voltage Directives (issued Jan. 1997) are satisfied. The machines and devices in which the servo is assembled are a target for CE marking.
The servo is a component designed not to function as a single unit but to be used with a combination of machines and devices. Thus, it is not subject to the EMC Directives, and instead the machines and devices in which the servo is assembled are targeted.
This servo complies with the Standards related to the Low-voltage Directives in order to make CE marking of the assembled machines and devices easier. The EMC INSTALLATION GUIDELINES (IB (NA) 67303) which explain the servo amplifier installation method and control panel manufacturing method, etc., has been prepared to make compliance to the EMC Directives easier. Contact Mitsubishi or your dealer for more information.

2. Cautions of compliance

Use the standard servo amplifier and EN Standards compliance part (some standard models are compliant) for the servomotor. In addition to the items described in this instruction manual, observe the items described below.

上正科技有限公司
購買、維修 此手冊零組件
電話： 037-466333
Email: service@repairtw.com
Line id: @zzzz
www.repairtw.com

(1) Environment

The servo amplifier must be used within an environment having a Pollution Class of 2 or more as stipulated in the IEC664. For this, install the servo amplifier in a control panel having a structure (IP54) into which water, oil, carbon and dust cannot enter.

(2) Power supply

1) The servo amplifier must be used with the overvoltage category II conditions stipulated in IEC664. For this, prepare a reinforced insulated transformer that is IEC or EN Standards complying at the power input section.
2) When supplying the control signal input/output power supply from an external source, use a 24 VDC power supply of which the input and output have been reinforced insulated.

(3) Installation

1) To prevent electric shocks, always connect the servo amplifier protective earth (PE) terminal (terminal with ⏚ mark) to the protective earth (PE) on the control panel.
2) When connecting the earthing wire to the protective earth (PE) terminal, do not tighten the wire terminals together. Always connect one wire to one terminal.

(4) Wiring

1) Always use crimp terminals with insulation tubes so that the wires connected to the servo amplifier terminal block do not contact the neighboring terminals.

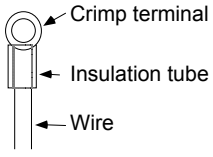

(5) Peripheral devices

1) Use a no-fuse breaker and magnetic contactor that comply with the EN/IEC Standards described in Chapter 7 Peripheral Devices.
2) The wires sizes must follow the conditions below. When using other conditions, follow Table 5 of EN60204 and the Appendix C.
   - Ambient temperature: 40°C
   - Sheath: PVC (polyvinyl chloride)
   - Install on wall or open table tray

(6) Servomotor

Contact Mitsubishi for the outline dimensions, connector signal array and detector cable.

(7) Others

Refer to the EMC INSTALLATION GUIDELINES (IB (NA) 67303) for other EMC Directive measures related to the servo amplifier.

上正科技有限公司
購買、維修 此手冊零組件
電話： 037-466333
Email: service@repairtw.com
Line id: @zzzz
www.repairtw.com

Contents

Chapter 1 Introduction
1-1 Intelligent servomotor outline 1-2
1-2 Limits and special notes for intelligent servomotor 1-2
1-2-2 Precautions for selecting the intelligent servomotor 1-2
1-2-2 Precautions for use 1-2
1-2-3 Miscellaneous 1-2
1-3 Inspection at purchase 1-3
1-3-1 Explanation of type 1-3

Chapter 2 Specifications
2-1 Standard specifications 2-2
2-2 Torque characteristics 2-3
2-3 Outline dimension drawings 2-4
2-3-1 HS-MF23 2-4
2-3-2 HS-RF43/73 2-4
2-3-3 HS-SF52/53/102/103 2-5
2-3-4 HS-SF202 2-5

Chapter 3 Characteristics
3-1 Overload protection characteristics 3-2
3-2 Magnetic brake characteristics 3-3
3-2-1 Motor with magnetic brakes 3-3
3-2-2 Magnetic brake characteristics 3-4
3-2-3 Magnetic brake power supply 3-4
3-3 Dynamic brake characteristics 3-5
3-3-1 Deceleration torque 3-5
3-3-2 Coasting amount 3-6

Chapter 4 Peripheral Devices
4-1 Dedicated options 4-2
4-1-1 I/F unit 4-2
4-1-2 Battery option for absolute position system 4-6
4-1-3 Cables and connectors 4-7
4-1-4 Cable clamp fitting 4-11
4-2 Peripheral devices 4-12
4-2-1 Selection of wire 4-12
4-2-2 Selection of no-fuse breakers 4-12
4-2-3 Selection of contactor 4-13
4-2-4 Circuit protector 4-14

Chapter 5 Installation
5-1 Installation of servomotor 5-3
5-1-1 Environmental conditions 5-3
5-1-2 Cautions for mounting load (prevention of impact on shaft) 5-3
5-1-3 Installation direction 5-3
5-1-4 Tolerable load of axis 5-4
5-1-5 Oil and waterproofing measures 5-4
5-1-6 Cable stress 5-5

上正科技有限公司
購買、維修此手冊零組件
電話：037-466333
Email: service@repairtw.com
Line id: @zzzz
www.repairtw.com

5-2 Installation of interface unit 5-6
5-2-1 Environmental conditions 5-6
5-2-2 Installation direction 5-6
5-2-3 Prevention of entering of foreign matter 5-6
5-3 Noise measures 5-7

Chapter 6 Wiring
6-1 System connection diagram 6-3
6-2 Connector 6-4
6-2-1 Connector signal layout 6-4
6-2-2 Signal name 6-5
6-3 Connection of power supply 6-6
6-3-1 Example of connection for controlling magnetic switch (MC) with MDS-B-CV/CR 6-6
6-3-2 Example of connection for controlling magnetic switch with external sequence circuit 6-8
6-3-3 Wiring of contactors (MC) 6-8
6-3-4 Surge absorber 6-9
6-4 Wiring the motor with brakes 6-9
6-4-1 Connection example 6-9
6-4-2 Manually releasing the magnetic brakes 6-10
6-5 Connection with the NC 6-11
6-5-1 Connection system 6-11

Chapter 7 Setup
7-1 Setting the initial parameters 7-2
7-1-1 Servo specification parameters 7-2
7-1-2 Limitations to electronic gear setting value 7-2
7-1-3 Parameters set according to feedrate 7-3
7-1-4 Parameters set according to machine load inertia 7-3
7-1-5 Standard parameter list according to motor 7-4

Chapter 8 Adjustment
8-1 Measurement of adjustment data 8-2
8-1-1 D/A output specifications 8-2
8-1-2 Setting the output data 8-2
8-1-3 Setting the output scale 8-3
8-1-4 Setting the offset amount 8-3
8-1-5 Clamp function 8-3
8-1-6 Filter function 8-3
8-2 Gain adjustment 8-4
8-2-1 Current loop gain 8-4
8-2-2 Speed loop gain 8-4
8-2-3 Position loop gain 8-6
8-3 Characteristics improvement 8-8
8-3-1 Optimal adjustment of cycle time 8-8
8-3-2 Vibration suppression measures 8-10
8-3-3 Improving the cutting surface precision 8-12
8-3-4 Improvement of protrusion at quadrant changeover 8-15
8-3-5 Improvement of overshooting 8-19

上正科技有限公司
購買、維修此手冊零組件
電話： 037-466333
Email: service@repairtw.com
www.repairtw.com

8-3-6 Improvement of characteristics during acceleration/deceleration 8-21
8-4 Setting for emergency stop 8-24
8-4-1 Deceleration control 8-24
8-4-2 Vertical axis drop prevention control 8-26
8-5 Collision detection 8-27
8-6 Parameter list 8-30

Chapter 9 Inspections
9-1 Inspections 9-2
9-2 Life parts 9-2
9-3 Replacing the unit 9-3
9-3-1 HS-MF23** type 9-3
9-3-2 HS-FR43/73, HS-SF52/53/102/103 type 9-3
9-3-3 HS-SF202 type 9-4

Chapter 10 Troubleshooting
10-1 Points of caution and confirmation 10-2
10-2 Troubleshooting at start up 10-2
10-3 Protective functions list 10-3
10-3-1 Alarm 10-3
10-3-2 Warnings list 10-7
10-3-3 Alarm and warning deceleration method and reset method 10-8

Chapter 11 Selection
11-1 Outline 11-2
11-1-1 Servomotor 11-2
11-1-2 Regeneration methods 11-3
11-2 Selection of servomotor series 11-4
11-2-1 Motor series characteristics 11-4
11-2-2 Servomotor precision 11-4
11-3 Selection of servomotor capacity 11-6
11-3-1 Load inertia ratio 11-6
11-3-2 Short time characteristics 11-6
11-3-3 Continuous characteristics 11-7
11-4 Selection of regenerative resistor 11-9
11-4-1 Limits for HS-MF23 11-9
11-4-2 Approximate calculation of positioning frequency 11-9
11-4-3 Calculation of regenerative energy 11-9
11-4-4 Calculation of positioning frequency 11-11
11-5 Motor shaft conversion load torque 11-12
11-6 Expressions for load inertia calculation 11-13

上正科技有限公司
購買、維修 此手冊零組件
電話： 037-466333
Email: service@repairtw.com
line id: @zzzz
www.repairtw.com

Chapter 1 Introduction

1-1 Intelligent servomotor outline 1-2
1-2 Limits and special notes for intelligent servomotor 1-2
1-2-2 Precautions for selecting the intelligent servomotor 1-2
1-2-2 Precautions for use 1-2
1-2-3 Miscellaneous 1-2
1-3 Inspection at purchase 1-3
1-3-1 Explanation of type 1-3

上正科技有限公司
購買、維修 此手冊零組件
電話： 037-466333
Email: service@repairtw.com
Line id: @zzzz
www.repairtw.com

1-1 Intelligent servomotor outline

The Mitsubishi intelligent servomotor is an integrated motor, encoder and amplifier, and has the following features.

- Space saving
  The amplifier does not need to be stored in the power distribution panel, so the machine, power distribution panel and heat exchanger can be downsized.
- Wire saving
  Only one wire is used between the NC and motor. (The signal and 200VAC input are wired with the same cable.)
- Flexible
  As an option axis can be added without changing the power distribution panel, variations can be easily added to the machine.
- High-speed
  As the power distribution panel does not require space, the servo can easily be used for hydraulic and pneumatic devices.

1-2 Limits and special notes for intelligent servomotor

1-2-1 Precautions for selecting the intelligent servomotor

(1) The intelligent servomotor does not have the regenerative resistor option (the regenerative resistor capacity cannot be increased.). Make sure that the regenerative energy is less than the tolerable regenerative capacity. Use the standalone HA/HC Series motor and MDS-B-V1/V2/SVJ2 Series servo amplifier for applications having a high regenerative energy due to a high positioning frequency or large load inertia, etc.

上正科技有限公司
購買、維修 此手冊零組件
電話： 037-466333
Email: service@repairtw.com
Line id: @zzzz
www.repairtw.com

(2) The HS-MF23 type does not have a regenerative resistor. There may be limits to the working rotation speed depending on the load inertia. Avoid using in applications generating continuous regeneration, such as with a vertical axis.

1-2-2 Precautions for use

(1) IP65 is recommended for the engagement of the HS-RF∗∗/SF∗∗ type connector. Make sure that water or oil, etc., does not come in contact in the disengaged state.

(2) Connect the HS-MF type relay connector in a relay box having a structure (IP54) that prevents the entry of water, oil and dust, etc. Fix the enclosed cable to the motor.

(3) A contact that released the brakes when the servo turns ON is built-in. The brakes will not be released just by inputting the 24V power from an external source. If the brakes need to be released when assembling the machine, etc., refer to section 6-4. Wiring a motor with brakes.

1-2-3 Miscellaneous

(1) When the motor shaft is turned by hand, it may seem heavier than other servomotors, or may seem tight. This is caused because of the dynamic brakes in the built-in amplifier, and is not a fault.

1-3 Inspection at purchase

Open the package, and read the rating nameplate to confirm that the servo amplifier and servomotor are as ordered.

1-3-1 Explanation of type

(1) Amplifier + motor integrated type

HS - □□ ○○□ □ □ □ - S□

- S□: Motor special symbol (Not provided with standard product)
- □: Amplifier/encoder special symbol (Cable length, etc.)
- □: Amplifier type — EX: With amplifier/encoder for NC
- □: Motor option — B: Brakes provided; Blank: No brakes
- ○○: Short-time rated output (W/100) · □: Rotation speed (rpm/1000)
  - 103: 1kW·3000r/min
  - 73: 0.75kW·3000r/min
  - 53: 0.5kW·3000r/min
  - 43: 0.4kW·3000r/min
  - 23: 200W·3000r/min
  - 202: 2kW·2000r/min
  - 102: 1kW·2000r/min
  - 52: 0.5kW·2000r/min
- □□: Motor Series
  - RF : Medium capacity, low inertia
  - SF : Medium capacity, medium inertia
  - MF : Small capacity, ultra-low inertia
- HS: Intelligent servomotor

上正科技有限公司
購買 維修 此手冊零組件
電話： 037-466333
Email: service@repairtw.com
Line id: @zzzz
www.repairtw.com

(2) Part types for separable amplifier and motor

1) Motor/encoder unit type

MDS - B - ISV ○○ □ □

- □: Amplifier/encoder special symbol (Cable length, etc.)
- □: Amplifier type — EX: With amplifier/encoder for NC
- ○○: Short-time rated output (W/100)
  - 20: 2kW
  - 10: 1kW
  - 07: 0.75kW
  - 05: 0.5kW
  - 04: 0.4kW
- ISV: Intelligent servomotor amplifier/encoder

2) Motor only type

HS - □□ ○○□ □ - s□

- s□: Motor special symbol (Not provided with standard product)
- □: Motor option — B: Brakes provided; Blank: No brakes
- ○○: Short-time rated output (W/100) · □: Rotation speed (rpm/1000)
  - 103: 1kW·3000r/min
  - 73: 0.75kW·3000r/min
  - 53: 0.5kW·3000r/min
  - 43: 0.4kW·3000r/min
  - 202: 2kW·2000r/min
  - 102: 1kW·2000r/min
  - 52: 0.5kW·2000r/min
- □□: Motor Series
  - RF : Medium capacity, low inertia
  - SF : Medium capacity, medium inertia
- HS: Intelligent servomotor

Explanation of rating nameplate

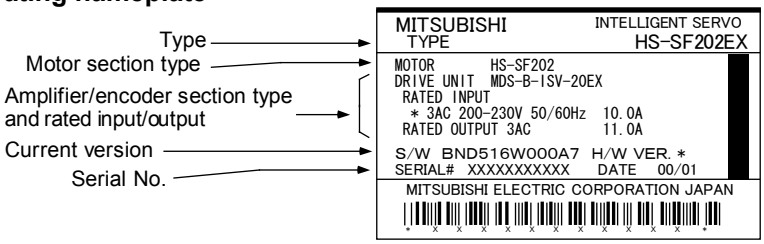

Chapter 2 Specifications

2-1 Standard specifications 2-2
2-2 Torque characteristics 2-3
2-3 Outline dimension drawings 2-4
2-3-1 HS-MF23 2-4
2-3-2 HS-RF43/73 2-4
2-3-3 HS-SF52/53/102/103 2-5
2-3-4 HS-SF202 2-5

上正科技有限公司
購買、維修 此手冊零組件
電話： 037-466333
Email: service@repairtw.com
Line id: @zzzz
www.repairtw.com

2-1 Standard specifications

(1) HS-MF, HS-RF Series (Low-inertia, small capacity/low-inertia, medium capacity)

Type		HS-MF23	HS-RF43	HS-RF73
Short-time characteristics	Rated output (kW)	0.2/15min	0.4/30min	0.75/30min
	Rated torque (N·m)	0.64	1.27	2.39
Continuous characteristics	Rated output (kW)	0.15	0.32	0.6
	Rated torque (N·m)	0.48	1.02	1.91
Maximum torque (N·m)		1.92	3.18	5.97
Rated rotation speed (r/min)		3000		
Maximum rotation speed (r/min)		3000		
Moment of inertia J ($\times 10^{-4}$kg·m^2)		0.089	0.8	1.5
Detector resolution/method		8,000/absolute value	100,000/absolute value	
Power supply	Voltage/frequency	3-phase 200VAC to 230VAC 50/60Hz (HS-MF23 is single-phase)		
	Tolerable voltage fluctuation	170 to 253VAC		
	Tolerable frequency fluctuation	±5%		
	Power facility capacity (kVA)	0.5	0.9	1.3
Control method		Sine wave PWM control, current control method		
Dynamic brakes		Built-in		
Recommended load moment of inertia rate		4-fold or less when using cutting axis, 10-fold or less when using peripheral axis		
Environment conditions		Follows section 3-1-1 Environment conditions		
Structure		Fully closed self-cooling: Protective structure IP65 (Excluding MF23 connector. Protection applies for all connectors when engaged to machine.)		

上正科技有限公司
購買、維修 此手冊零組件
電話： 037-466333
Email: service@repairtw.com
Line id: @zzzz
www.repairtw.com

(2) HS-SF Series (medium-inertia, medium-capacity)

Type		HS-SF52	HS-SF53	HS-SF102	HS-SF103	HS-SF202
Short-time characteristics	Rated output (kW)	0.5/30min	0.5/30min	1.0/30min	1.0/30min	2.0/30min
	Rated torque (N·m)	2.39	1.59	4.78	3.18	9.55
Continuous characteristics	Rated output (kW)	0.4	0.4	0.75	0.75	1.5
	Rated torque (N·m)	1.91	1.27	3.58	2.39	7.16
Maximum torque (N·m)		11.8	8.82	21.6	16.7	41.7
Rated rotation speed (r/min)		2000	3000	2000	3000	2000
Maximum rotation speed (r/min)		2000	3000	2000	3000	2000
Moment of inertia J ($\times 10^{-4}$kg·m^2)		6.6	6.6	13.6	13.6	42.5
Detector resolution/method		100,000/absolute value				
Power supply	Voltage/frequency	3-phase 200VAC to 230VAC 50/60Hz				
	Tolerable voltage fluctuation	170 to 253VAC 50/60Hz				
	Tolerable frequency fluctuation	±5%				
	Power facility capacity (kVA)	1.0	1.0	1.7	1.7	3.5
Control method		Sine wave PWM control, current control method				
Dynamic brakes		Built-in				
Recommended load moment of inertia rate		4-fold or less when using cutting axis, 10-fold or less when using peripheral axis				
Environment conditions		Follows section 3-1-1 Environment conditions				
Structure		Fully closed self-cooling: Protective structure IP65 (Protection applies for connector section when engaged)				

Note 1: The rated output and rated rotation speed are the guaranteed values in the 200 to 230VAC 50/60Hz range. The torque-speed line diagram indicates the characteristics when 200VAC is input. Note that the high-speed characteristics will drop when the power voltage drops.
Note 2: Make sure that the acceleration/deceleration torque is within 80% of the maximum output torque.
Note 3: Make sure that the continuous effective load torque is within 80% of the motor rated torque.
Note 4: With the HS-MF23, if the recommended load moment of inertia rate is exceeded, an overvoltage alarm may occur because of the speed and deceleration torque. (Refer to Chapter 11.)
Note 5: Magnetic brakes are prepared for the 0.4KW and larger capacities. The HS-MF23 does not have brake specifications.

2-2 Torque characteristics

[HS-MF23]

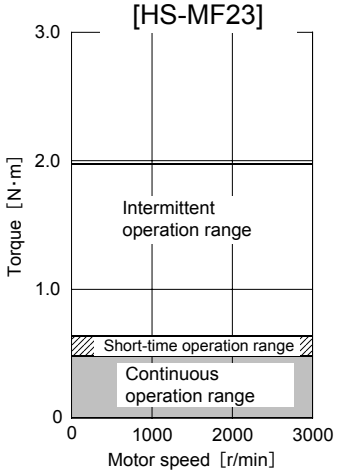

[HS-RF43]

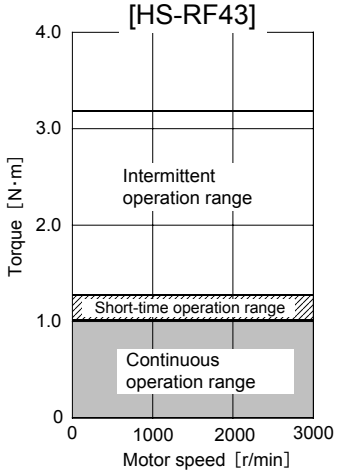

[HS-RF73]

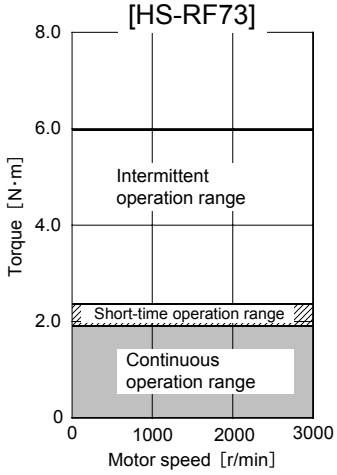

[HS-SF52]

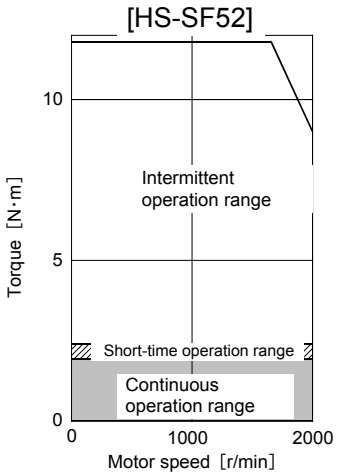

[HS-SF53]

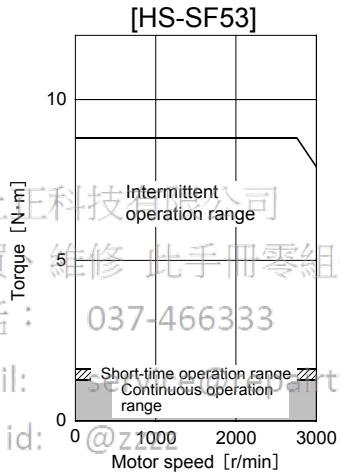

[HS-SF102]

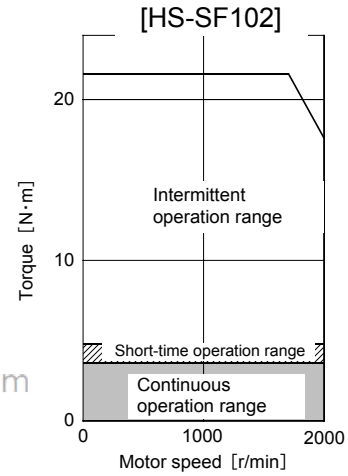

上正科技有限公司
購買、維修 此手冊零組件
電話： 037-466333
Email: service@repairtw.com
Line id: @zzzz
www.repairtw.com

[HS-SF103]

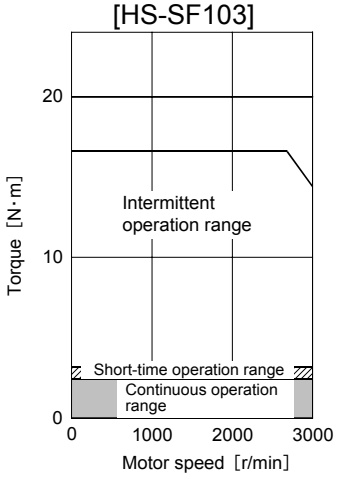

[HS-SF202]

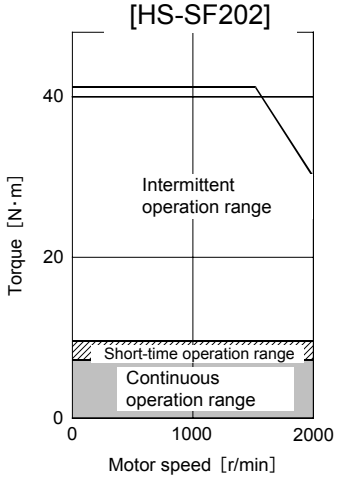

2-3 Outline dimension drawings

2-3-1 HS-MF23

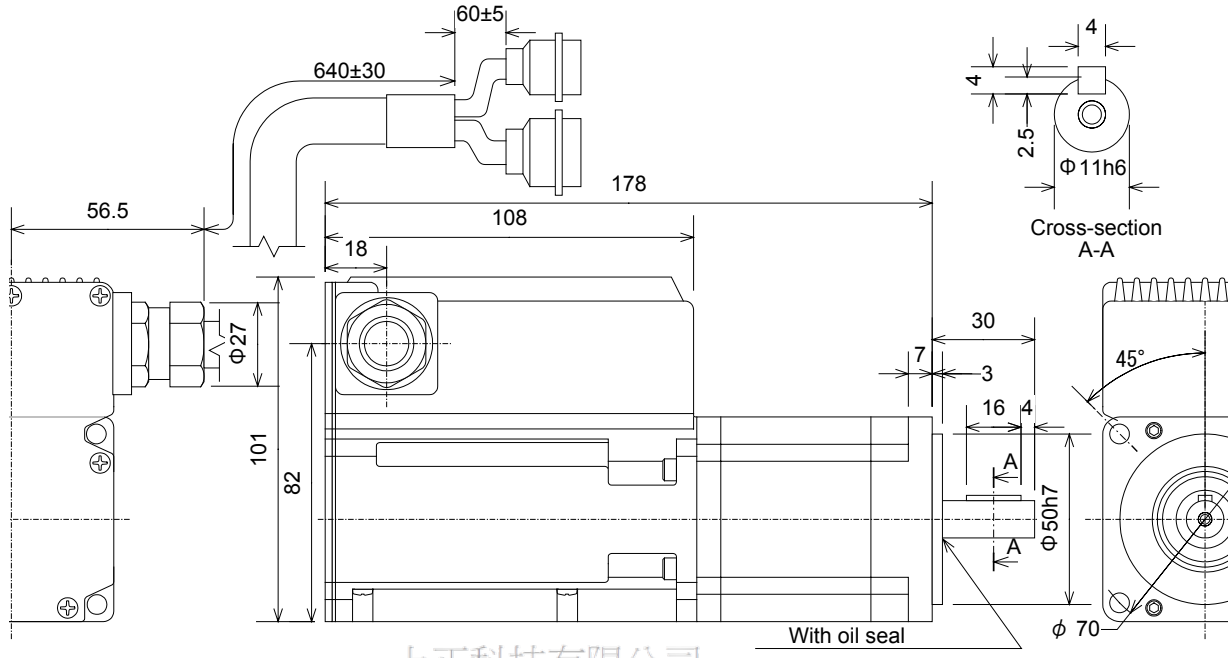

上正科技有限公司
購買、維修 此手冊零組件
電話： 037-466333
Email: service@repairtw.com
Line id: @zzz
www.repairtw.com

2-3-2 HS-RF43/73

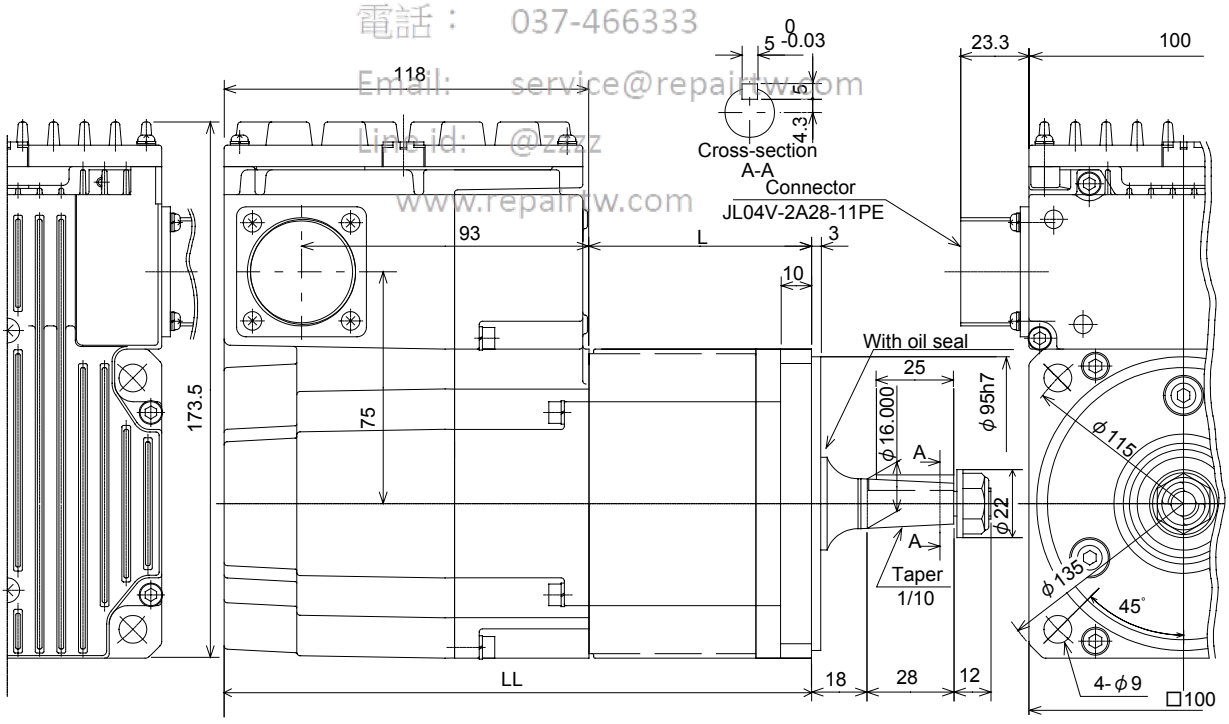

Changed dimensions			
Model		**L**	**LL**
HS-RF43	400W	86	204
HS-RF43B	400W with brakes	In planning stages	
HS-RF73	750W	104	222
HS-RF73B	750W with brakes	In planning stages	

2-3-3 HS-SF52/53/102/103

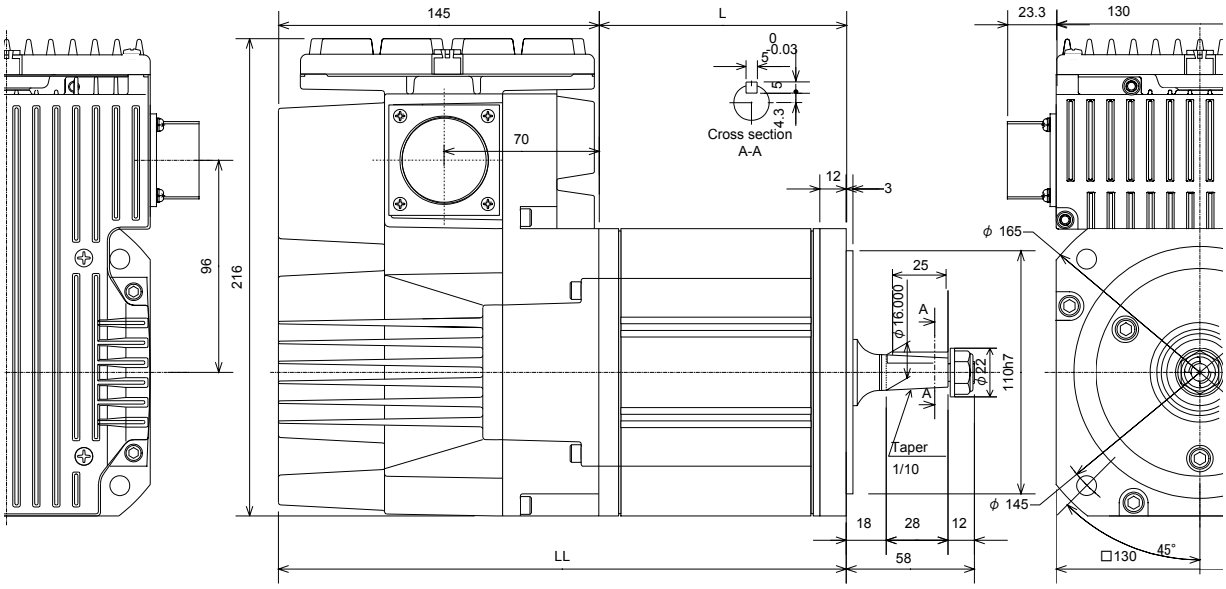

Changed dimensions			
Model		**L**	**LL**
HS-SF53/52	500W	87	232
HS-SF53/52B	500W with brakes	119	270
HS-SF103/102	1kW	112	257
HS-SF103/102B	1kW with brakes	144	295

上正科技有限公司
購買、維修 此手冊零組件
電話： 037-466323
Email: service@repairtw.com
Line id: @zzzz
www.repairtw.com

2-3-4 HS-SF202

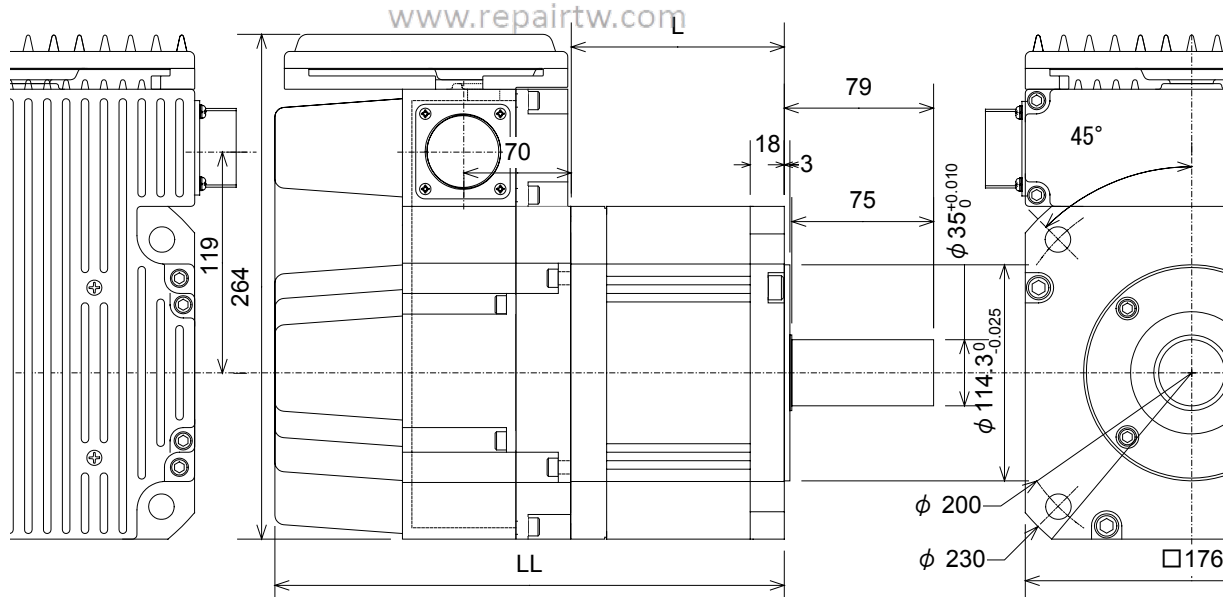

Changed dimensions			
Model		**L**	**LL**
HS-SF202	2kW	116	270
HS-SF202B	2kW with brakes	In planning stages	

Chapter 3 Characteristics

3-1 Overload protection characteristics..... 3-2
3-2 Magnetic brake characteristics 3-3
3-2-1 Motor with magnetic brakes 3-3
3-2-2 Magnetic brake characteristics..... 3-4
3-2-3 Magnetic brake power supply 3-4
3-3 Dynamic brake characteristics 3-5
3-3-1 Deceleration torque..... 3-5
3-3-2 Coasting amount..... 3-6

上正科技有限公司
購買、維修 此手冊零組件
電話： 037-466333
Email: service@repairtw.com
Line id: @zzzz
www.repairtw.com

3-1 Overload protection characteristics

The servo amplifier has an electronic thermal relay to protect the servomotor and servo amplifier from overloads. The operation characteristics of the electronic thermal relay when standard parameters (SV021=60, SV022=150) are set shown below.
If overload operation over the electronic thermal relay protection curve shown below is carried out, overload 1 (alarm 50) will occur. If the maximum current is commanded at 95% or higher continuously for one second or more due to a machine collision, etc., overload 2 (alarm 51) will occur.

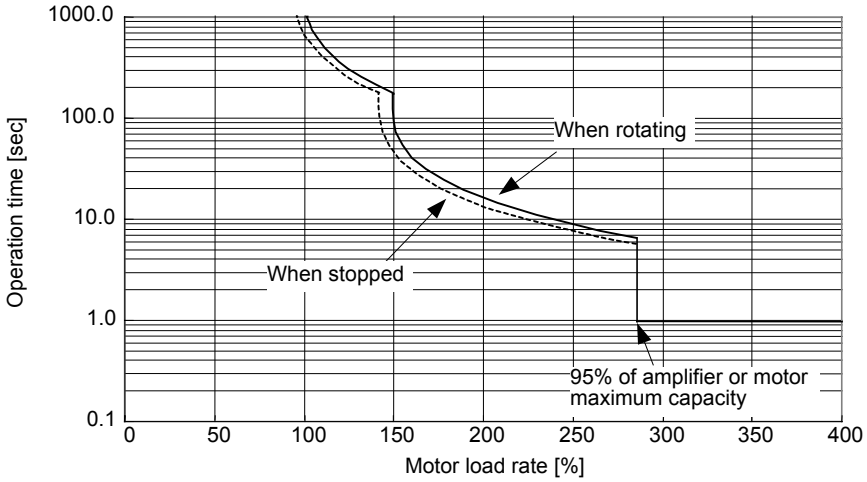

上正科技有限公司
購買、維修 此手冊零組件
電話： 037-466333
Email: service@repairtw.com
Line id: @zzzz
www.repairtw.com

Fig. 3-1 Overload protection characteristics

3-2 Magnetic brake characteristics

⚠ **CAUTION**	1. The axis will not be mechanically held even when the dynamic brakes are used. If the machine could drop when the power fails, use a servomotor with magnetic brakes or provide an external brake mechanism as holding means to prevent dropping. 2. The magnetic brakes are used for holding, and must not be used for normal braking. There may be cases when holding is not possible due to the life or machine structure (when ball screw and servomotor are coupled with a timing belt, etc.). Provide a stop device on the machine side to ensure safety. When releasing the brakes, always confirm that the servo is ON first. Sequence control considering this condition is possible if the amplifier motor brake control signal (MBR) is used. 3. When operating the brakes, always turn the servo OFF (or ready OFF). 4. When the vertical axis drop prevention function is used, the drop of the vertical axis during an emergency stop can be suppressed to the minimum.

3-2-1 Motor with magnetic brakes

(1) Types

The motor with magnetic brakes is set for each motor. The "B" following the standard motor type indicates the motor with brakes.

(2) Applications

上正科技有限公司
購買、維修 此手冊零組件
電話： 037-466333
Email: service@repairtw.com
Line id: @zzzz
www.repairtw.com

When this type of motor is used for the vertical feed axis in a machining center, etc., slipping and dropping of the spindle head can be prevented even when the hydraulic balancer's hydraulic pressure reaches zero when the power turns OFF. When used with a robot, deviation of the posture when the power is turned OFF can be prevented.
When used for the feed axis of a grinding machine, a double safety measures is formed with the deceleration stop (dynamic brake stop), and the risks of colliding with the grinding stone and scattering can be prevented.
This motor cannot be used for purposes other than holding and braking during a power failure (emergency stop). (This cannot be used for normal deceleration, etc.)

(3) Features

1) The magnetic brakes use a DC excitation method, thus:
   - The brake mechanism is simple and the reliability is high.
   - There is no need to change the brake tap between 50 Hz and 60 Hz.
   - There is no rush current when the excitation occurs, and shock does not occur.
   - The brake section is not larger than the motor section.
2) The magnetic brakes are built into the motor, and the installation dimensions are the same as the motor without brakes.

3-2-2 Magnetic brake characteristics

Item		HS-RF Series	HA-SF Series	
		43B 73B	53B 52B 103B 102B	202B
Type (Note 1)		Spring braking type safety brakes		
Rated voltage		24VDC		
Rated current at 20°C	(A)	0.41	0.8	0.8
Excitation coil resistance at 20°C	(Ω)	58	30	30
Capacity	(W)	9.9	19.2	19.2
Attraction current	(A)	0.20	0.25	0.25
Dropping current	(A)	0.12	0.085	0.08
Static friction torque	(N·m)	2.4	6.8	8.5
Moment of inertia (Note 2)	J ($\times 10^{-4}$kg·m^2)	0.26	0.35	2.0
Release delay time (sec) (Note 3)		0.03	0.03	0.03
Tolerable braking work amount (J)	Per braking	64	400	400
	Per hour	640	4000	4000
Brake play at motor axis (deg.)		0.1 to 0.9	0.2 to 0.6	0.2 to 0.6
Brake life (Note 4)		20,000 times with 32 (J) braking amount per braking	20,000 times with 200 (J) braking amount per braking	20,000 times with 200 (J) braking amount per braking

Notes:

1. There is no manual release mechanism. Refer to section "6-4-2 Manually releasing the magnetic brakes".
2. These are the values added to the servomotor without brakes.
3. This is the value for 20°C at the initial attraction gap.
4. The brake gap will widen through brake lining wear caused by braking. However, the gap cannot be adjusted. Thus, the brake life is reached when adjustments are required.
5. A leakage flux will be generated at the shaft end of the servomotor with magnetic brakes.
6. When operating in low speed regions, the sound of loose brake lining may be heard. However, this is not a problem in terms of function.
7. The brake characteristics for the HS-RF Series and HS-SF202 are the planned values.

Email: service@repairtw.com
Line id: @zzzz
www.repairtw.com

3-2-3 Magnetic brake power supply

(1) Brake excitation power supply

1) Prepare a brake excitation power supply that can accurately ensure the attraction current in consideration of the voltage fluctuation and excitation coil temperature.
2) The brake terminal polarity is random. Make sure not to mistake the terminals with other circuits.

(2) Brake excitation circuit

<Cautions>

- Provide sufficient DC cut off capacity at the contact.
- Always use a serge absorber.

3-3 Dynamic brake characteristics

When an emergency stop occurs such as that due to a servo alarm detection, the motor will stop with the deceleration control at the standard setting. However, by setting the servo parameter (SV017: SPEC), the dynamic brake stop can be selected. If a servo alarm that cannot control the motor occurs, the dynamic brakes stop the servomotor regardless of the parameter setting.

3-3-1 Deceleration torque

The dynamic brakes use the motor as a generator, and obtains the deceleration torque by consuming that energy with the dynamic brake resistance. The characteristics of this deceleration torque have a maximum deceleration torque (Tdp) regarding the motor speed as shown in the following drawing. The torque for each motor is shown in the following table.

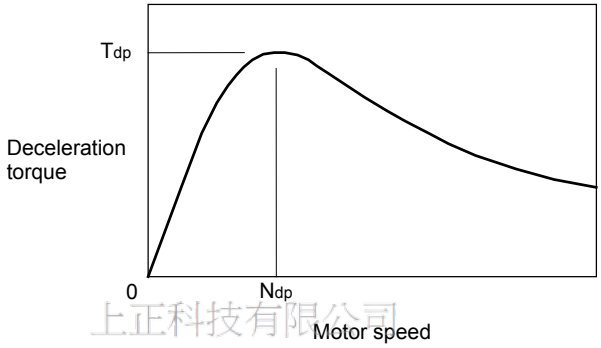

上正科技有限公司
購買、維修 此手冊零組件
電話： 037-466333
Email service@repairtw.com
Line id @rrz
www.repairtw.com

Fig. 3-2 Deceleration torque characteristics of a dynamic brake stop

Table 3-1 Max. deceleration torque of a dynamic brake stop

Motor type	Rated torque (N·m)	T_{dp} (N•m)	N_{dp} (r/min)	Motor type	Rated torque (N·m)	T_{dp} (N•m)	N_{dp} (r/min)
HS-MF23	0.64	0.40	465	HS-SF52	2.39	2.40	496
HS-RF43				HS-SF53	1.59	2.54	472
HS-RF73	3.18	3.67	582	HS-SF102	4.78	11.19	884
				HS-SF103	3.18	10.72	1045
				HS-SF202	9.55	10.56	457

3-3-2 Coasting amount

The motor coasting amount when stopped by a dynamic brake can be approximated using the following expression.

$$C_{MAX} = \frac{No}{60} \cdot te + \left(1 + \frac{J_L}{J_M}\right) \cdot (A \cdot No^3 + B \cdot No)$$

C_{MAX}	:	Maximum motor coasting amount	(turn)
No	:	Initial motor speed	(r/min)
J_M	:	Motor inertia	($kg \cdot cm^2$)
J_L	:	Motor shaft conversion load inertia	($kg \cdot cm^2$)
te	:	Brake drive relay delay time	(sec) (Normally, 0.03sec)
A	:	Coefficient A (Refer to the table below)	
B	:	Coefficient B (Refer to the table below)	

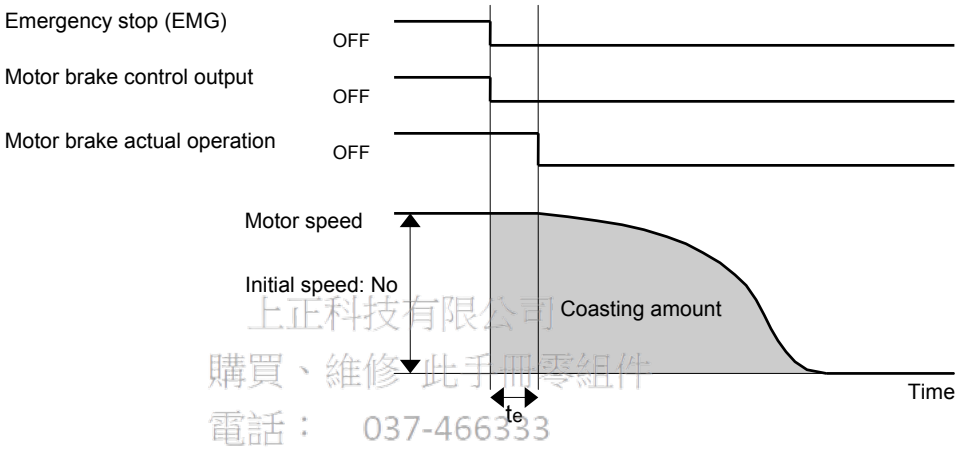

上正科技有限公司
購買、維修此手冊零組件
電話： 037-466333
Email: service@repairtw.com
Line Id: @2222
www.repairtw.com

Fig. 3-3 Dynamic brake braking diagram

Table 3-2 Coasting amount calculation coefficients

Motor type	J_M ($kg \cdot cm^2$)	A	B	Motor type	J_M ($kg \cdot cm^2$)	A	B
HS-MF23	0.088	1.38×10^{-11}	0.90×10^{-5}	HS-SF52	6.6	16.13×10^{-11}	11.93×10^{-5}
HS-RF43	0.8	2.04×10^{-11}	2.07×10^{-5}	HS-SF53	6.6	15.99×10^{-11}	10.71×10^{-5}
HS-RF73	1.5	2.04×10^{-11}	2.07×10^{-5}	HS-SF102	13.6	4.00×10^{-11}	9.38×10^{-5}
				HS-SF103	13.6	3.53×10^{-11}	11.58×10^{-5}
				HS-SF202	42.5	25.60×10^{-11}	16.07×10^{-5}

Chapter 4 Peripheral Devices

4-1 Dedicated options 4-2
4-1-1 I/F unit 4-2
4-1-2 Battery option for absolute position system 4-6
4-1-3 Cables and connectors 4-7
4-1-4 Cable clamp fitting 4-11
4-2 Peripheral devices 4-12
4-2-1 Selection of wire 4-12
4-2-2 Selection of no-fuse breakers 4-12
4-2-3 Selection of contactor 4-13
4-2-4 Circuit protector 4-14

上正科技有限公司
購買、維修 此手冊零組件
電話： 037-466333
Email: service@repairtw.com
Line id: @zzzz
www.repairtw.com

DANGER Always wait at least 10 minutes after turning the power OFF, and check the voltage with a tester, etc., before connecting the option or peripheral device. Failure to observe this could lead to electric shocks.

CAUTION Use the designated peripheral device and options. Failure to observe this could lead to faults or fires.

4-1 Dedicated options

4-1-1 I/F unit

Name		Intelligent servomotor I/F unit
Type		HS-IF-6
Maximum number of connected axes		Maximum 6 intelligent servomotor axes (The total number of connected axes follows the NC unit specifications)
Input power voltage		AC200 to 230V 50/60Hz
Functions		Serial bus interface between NC and intelligent servomotor 200VAC branching to main circuit and control power circuit
Miscellaneous		Surge absorber, radio noise filter, internal 5V power
Environ-ment conditions	Ambient temperature	0°C to +55°C (with no freezing)
	Ambient humidity	90% RH or less (with no dew condensation)
	Storage temperature	–20°C to +65°C (with no freezing)
	Storage humidity	90% RH or less (with no dew condensation)
	Atmosphere	Indoors (not subject to direct sunlight). No corrosive gases, flammable gases, oil mist or dust
	Altitude	1000m or below sea level
	Vibration	5.9m/sec^2 or less
Outline dimensions		H: 300 × W: 80 × D: 80 (refer to following drawings)

上誼科技有限公司
購買、維修 此手冊零組件
電話： 037-466333
Email: service@repairtw.com
Line id: @zzzz
www.repairtw.com

(1) Outline drawing

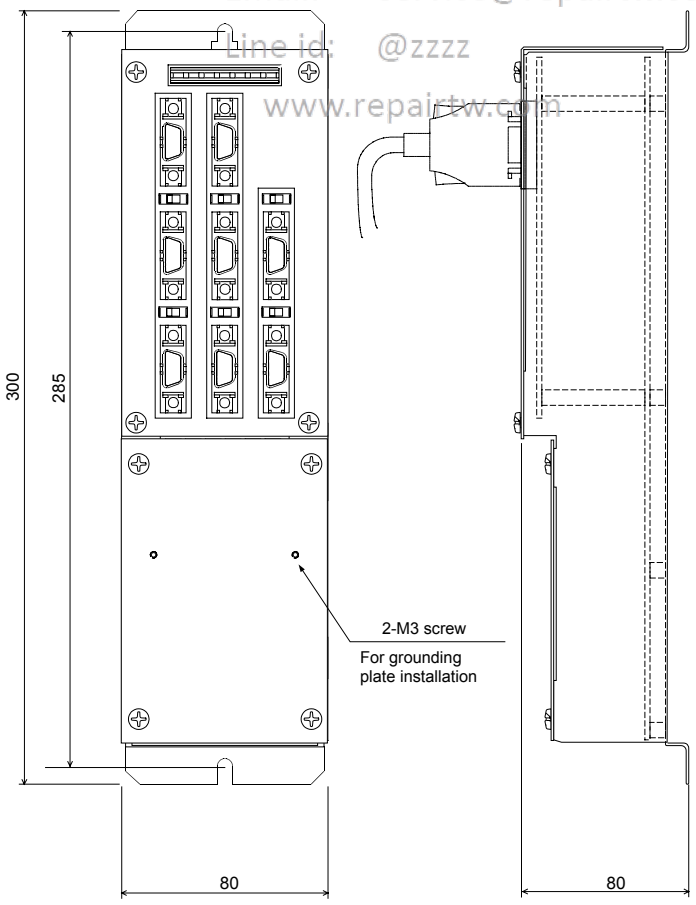

(2) Explanation of each part

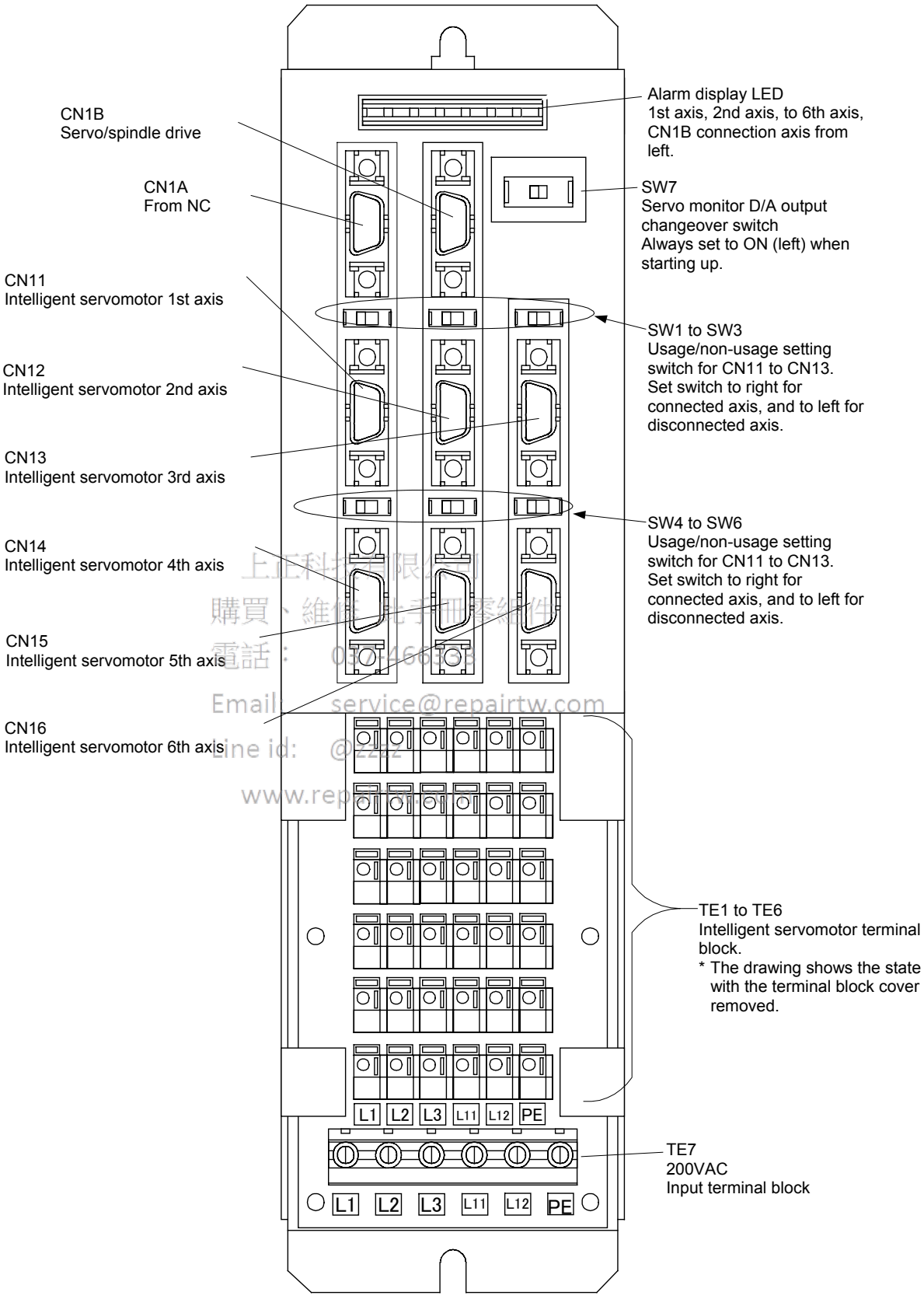

上正科技有限公司
購買、維修 此手冊零組件
電話： 037-466333
Email: service@repairtw.com
Line id: @zzzz
www.repairtw.com

(3) Signal wire connection and switch settings

1) Connector connection

Connect the cable from the NC unit to CN1A. The servo/spindle drive other than the intelligent servomotor is connected to CN1B. If there is no servo/spindle drive, connect the battery unit or terminator.
The intelligent servomotor axis No. is set according to the I/F unit connector connection site. Connect to the correct connector.

2) Switch setting

Set the setting switches SW1 to SW6 according to whether CN11 to CN16 are used or not. SW7 is the servo monitor D/A output changeover switch, so normally set it to the left position. Set it to the right when using the D/A output function. Note that when the power is turned ON, this switch must be set to the left or the "Amplifier Not Mounted" alarm will occur.

(4) Power supply connection

1) Explanation of terminal block

Connect the 200VAC power to TE7.
The intelligent servomotor's power wires are connected to TE1 to TE6. The TE1 to TE6 connection order is random, but connect from TE6 in order from the motor with the larger capacity.
The connections are L1, L2, L3 (main power), L11, L12 (control circuit power), and PE from the left on each terminal block.

2) Wire end treatment

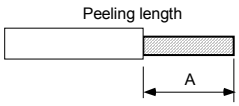

Single wire : Peel the wire sheath and use the wire.
Stranded wire: Peel the wire sheath and twist the core wires before using. Take care to prevent short-circuiting with the neighboring poles caused by fine wire strands.
Do not solder onto the core wires as a contact fault could occur.
(Wire size: 0.25 to 2.5mm^2)

上正科技有限公司
購買、維修 此手冊零組件
電話： 037-466333
Email: service@repairtw.com
Line id: @zzzz
www.repairtw.com

	Wire size		Peeling length A (mm)
	Single wire	Stranded wire	
TE7	0.2 to 6mm^2	0.2 to 4mm^2	8
TE1 to TE6	0.2 to 1.5mm^2	0.2 to 1.5mm^2	10

3) Connection method

TEL7 (200VAC power supply)

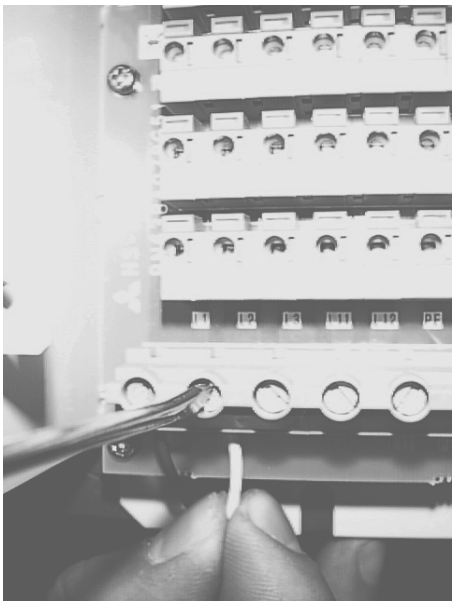

Insert the wire, and tighten the terminal with a flat-tip screwdriver. The tightening torque is 0.5 to 0.6Nm.

TE1 to 6 (intelligent servomotor)

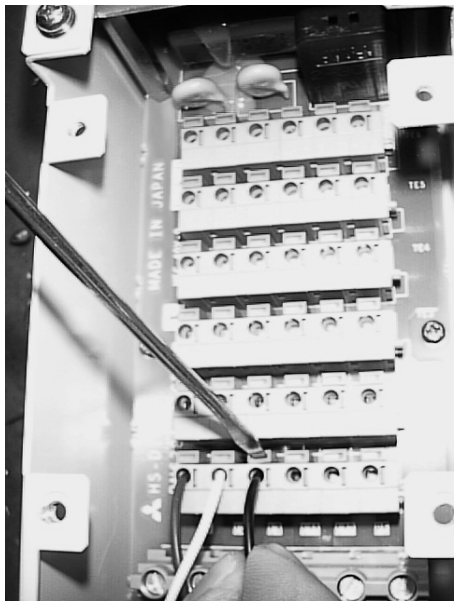

Insert the wire while pressing the terminal block lever. The wire will be fixed when the lever is released.

4) Total capacity of connected motors

The total capacity of the motors that can be connected to the HS-IF-6 main power terminal block is 6kW or less. If the total motor capacity exceeds 6kW, wire with a standalone terminal block.

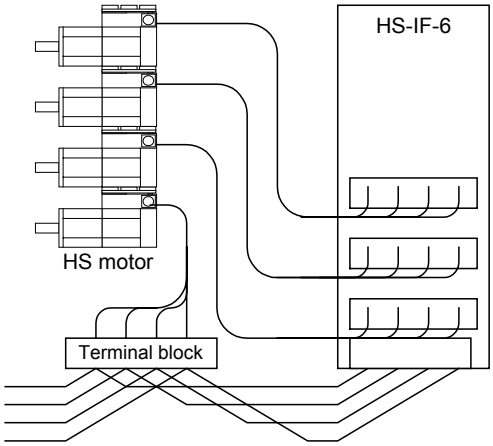

(5) D/A output measurement methods

1) Remove the upper cover from the I/F unit.
2) Connect a measuring instrument to the I/F unit check pin. Refer to the drawing on the right for the connection sections.
3) When observing the waveform, turn the I/F unit's servo monitor D/A output changeover switch to OFF (right).
4) Select the data to be measured with the parameters. (Refer to section "8-1. Measuring the adjustment data".)

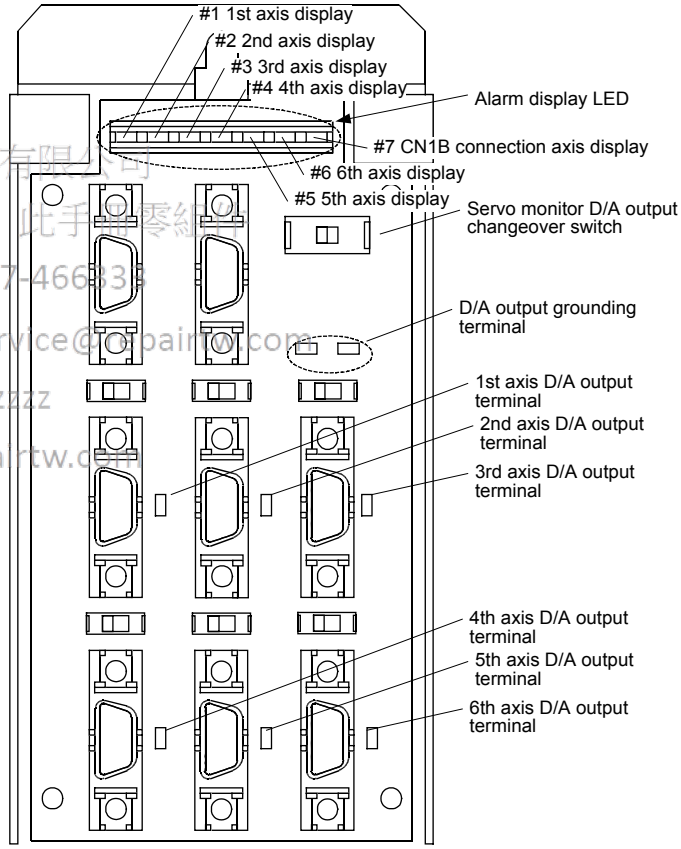

上正科技有限公司
購買、維修 此手冊零組件
電話： 037-466333
Email: service@repairtw.com
Line id: @zzzz
www.repairtw.com

⚠ **CAUTION**	Always turn the DIP switch ON before turning the power ON. Do not connect a measuring instrument having a low input impedance when turning the power ON. The "Amplifier Not Mounted" alarm will occur.

(6) Alarm display LED

The alarm display LED holds the state of each axis alarm when an alarm or emergency stop occurs.
Use this to pinpoint the cause when an emergency stop state occurs due to a cable or amplifier fault.
The display of each LED will change as shown below.

	#1	#2	#3	#4	#5	#6	#7
When 200VAC is turned ON	Not set	Not set	Not set	Not set	Not set	Not set	Not set
After NC starts	Not ON	Not ON	Not ON	Not ON	Not ON	Not ON	Not ON
Emergency stop occurrence from NC side	Not ON	Not ON	Not ON	Not ON	Not ON	Not ON	Not ON
Emergency stop occurrence from intelligent servomotor 1st axis	ON	Not ON	Not ON	Not ON	Not ON	Not ON	Not ON
Emergency stop occurrence from intelligent servomotor 2nd axis	Not ON	ON	Not ON	Not ON	Not ON	Not ON	Not ON
Emergency stop occurrence from intelligent servomotor 3rd axis	Not ON	Not ON	ON	Not ON	Not ON	Not ON	Not ON
Emergency stop occurrence from intelligent servomotor 4th axis	Not ON	Not ON	Not ON	ON	Not ON	Not ON	Not ON
Emergency stop occurrence from intelligent servomotor 5th axis	Not ON	Not ON	Not ON	Not ON	ON	Not ON	Not ON
Emergency stop occurrence from intelligent servomotor 6th axis	Not ON	Not ON	Not ON	Not ON	Not ON	ON	Not ON
Emergency stop occurrence from servo/spindle connected to CN1B	Not ON	Not ON	Not ON	Not ON	Not ON	Not ON	ON

4-1-2 Battery option for absolute position system

A battery or battery unit must be provided for the absolute position system.

Battery option specifications

Item	Battery unit			
Type	MDS-A-BT2	MDS-A-BT4	MDS-A-BT6	MDS-A-BT8
No. of backup axes	2 axes	4 axes	6 axes	7 axes
Battery continuous back up time	Approx. 12,000 hours			
Battery useful life	7 years from date of unit manufacture			
Data save time during battery replacement	HS-MF : 2 hours at time of delivery, 1 hour after 5 years HS-RF, -SF : 20 hours at time of delivery, 10 hour after 5 years			
Back up time from battery warning to alarm occurrence	Approx. 100 hours			

⚠ CAUTION

The battery life will be greatly affected by the ambient temperature. The above data shows the theoretic values for when the ambient temperature of the battery is 25°C. If the ambient temperature rises, generally the back up time and useful life will be shorter.

<Outline dimension drawing>

MDS-A-BT2
MDS-A-BT4
MDS-A-BT6
MDS-A-BT8

上正科技有限公司
購買、維修 此手冊零組件
電話： 037-466333
Email: service@repairtw.com
Line id: @zzzz
www.repairtw.com

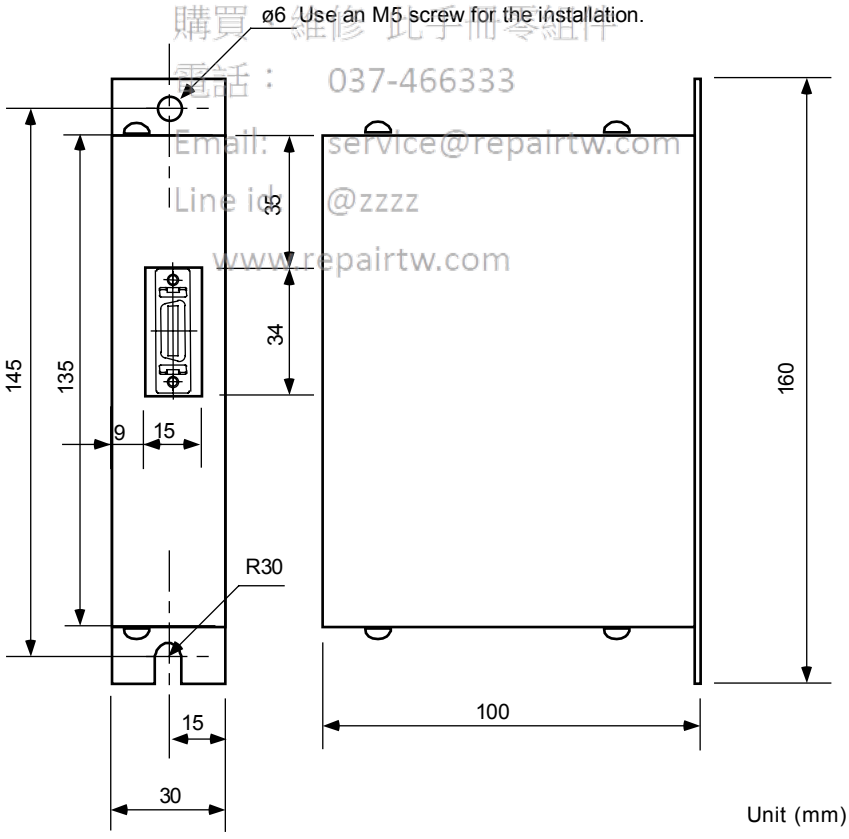

<Connection>

Instead of the terminator, connect the battery unit to the final drive unit with the amplifier-amplifier bus cable.

4-1-3 Cables and connectors

(1) Cable list

Part name		Type	Descriptions
For I/F unit	Communication cable for CNC unit - Amplifier Amplifier - Amplifier	SH21 Length: 0.35, 0.5, 0.7, 1, 1.5, 2, 2.5, 3, 3.5, 4, 4.5, 5, 6, 7, 8, 9, 10, 15, 20, 30m	Servo amplifier side connector (Sumitomo 3M) 10120-6000EL (Connector) 10320-3210-000 (Shell kit) Servo amplifier side connector (Sumitomo 3M) 10120-6000EL (Connector) 10320-3210-000 (Shell kit) 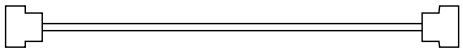
	Terminator connector	A-TM	
For intelligent servo-motor	For HS-MF between intelligent servomotor and I/F unit	HSMF-CABL-□-□M Length (m) Axis No. Blank: No display 1: 1st axis : 6: 6th axis	I/F unit side connector (Sumitomo 3M) 10120-3000VE (Connector) 10320-52A0-008 (Shell kit) Servomotor side connector (Japan AMP) 178289-3 (Housing for power supply) 178289-6 (Housing for signal) 1-917511-5 (Contact for L1, L2, PE) 1-175217-5 (Contact for L11, L12, signal) 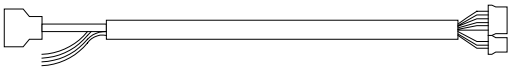
	For HS-RF and HS-SF between intelligent servomotor and I/F unit	HSSF□-CABL-□-□M Length (m) Axis No. Blank: No display 1: 1st axis : 6: 6th axis Motor side connector 2: Straight 3: Right angle	I/F unit side connector (Sumitomo 3M) 10120-3000VE (Connector) 10320-52A0-008 (Shell kit) Servomotor side connector (Japan Aviation) JI04V-6A28-11SE-EB (Straight) or JI04V-8A28-11SE-EB (Angle) JL04-2428CK (Clamp) 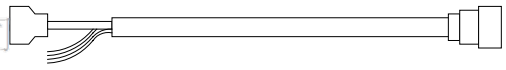

上正科技有限公司
購買連接 此手冊零組件
電話： 037-466333
Email: service@repairtw.com
Line id: @zzzz
www.repairtw.com

(2) Cable wiring diagram

For MS-MF

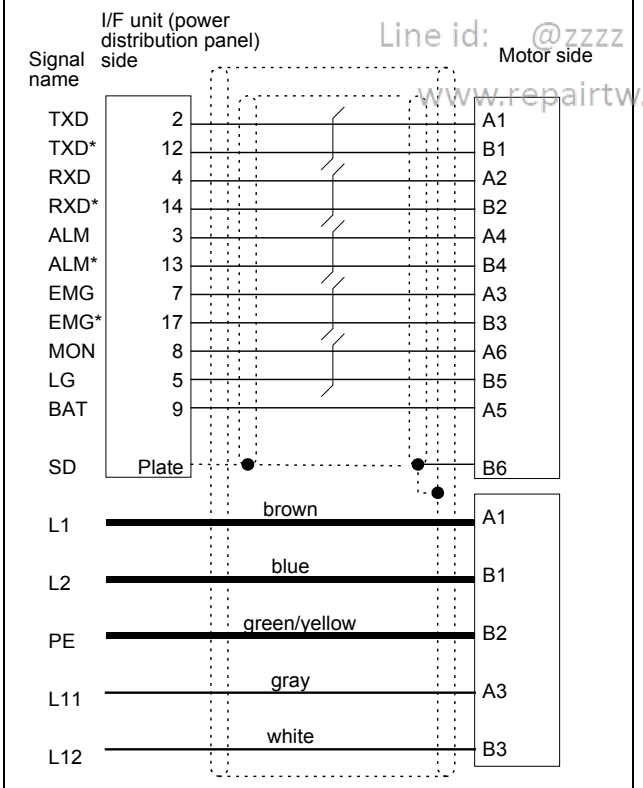

For HS-RF/SF

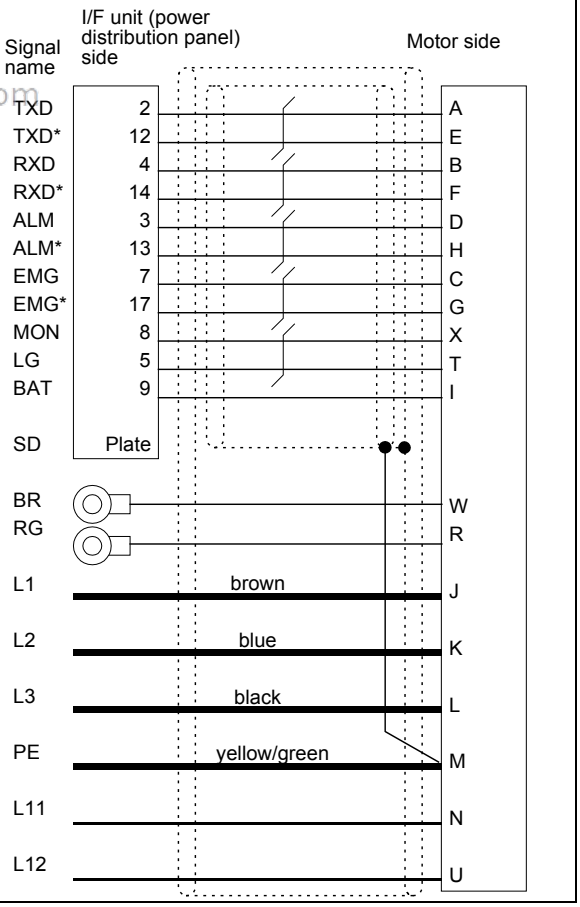

(3) Usage cables

The following cables are available as the compound cables for both signals and power supply.

(1) Part name: MIX20C(30/-SV,40/,7/36/0.08)-V Maker: Oki Electric Cable Co., Ltd.
(2) Part name: MIX19C(19,30,150/0.08)-V Maker: Oki Electric Cable Co., Ltd.

Use the (1) cable for a capacity of 1kW or more.

(4) Connector outline drawing

For IF unit

Maker: Sumitomo 3M (Ltd.)
<Type>
Connector: 10120-3000VE
Shell kit: 10320-52F0-008

[Unit: mm]

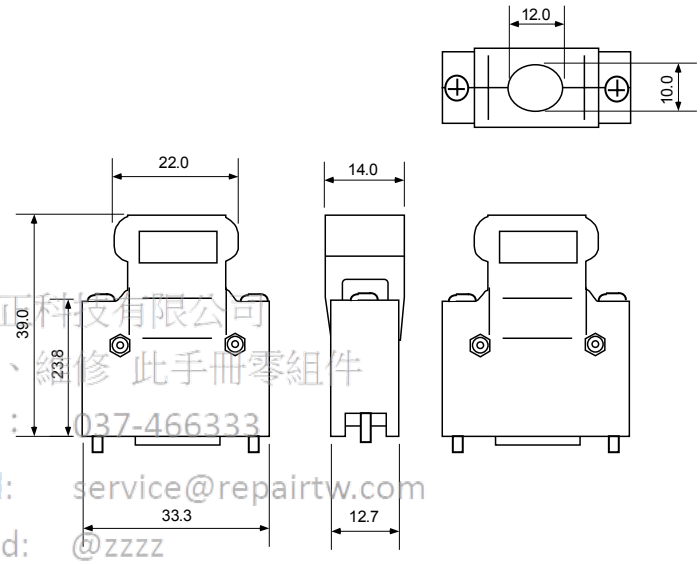

上正科技有限公司
購買、維修 此手冊零組件
電話：037-466333
Email: service@repairtw.com
Line id: @zzzz
www.repairtw.com

Maker: Sumitomo 3M (Ltd.)
<Type>
Connector: 10120-6000EL
Shell kit: 10320-3210-000

This connector is not an option. It is integrated with the cable.

[Unit: mm]

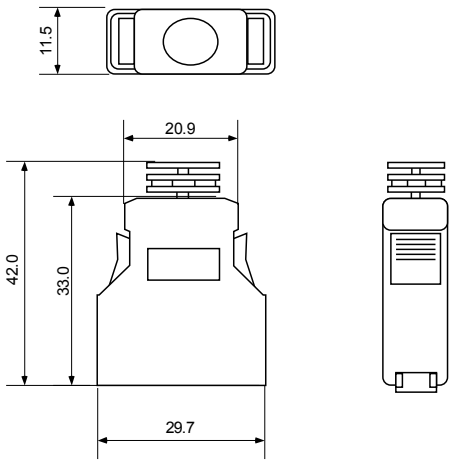

For intelligent servomotor HS-RF/HS-SF

Single block
Maker: Japan Aviation
Type: JL04V-6A28-11SE

[Unit: mm]

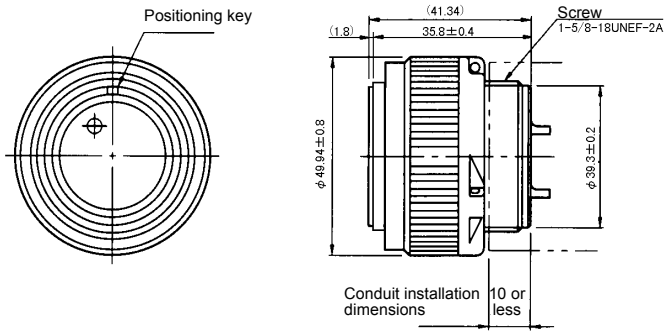

Straight plug
Maker: Japan Aviation
Type: JL04V-6A28-11SE-EB

[Unit: mm]

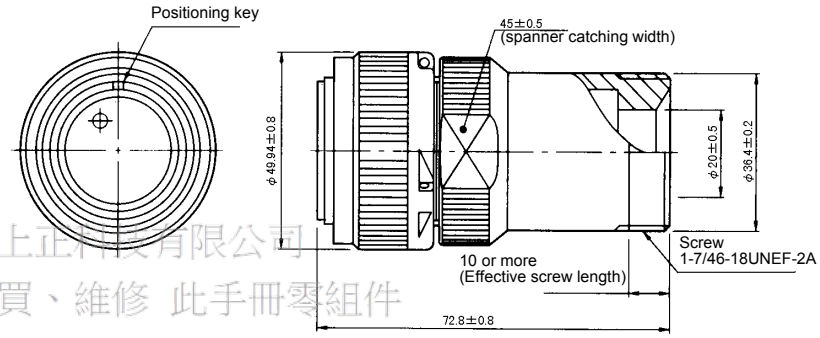

上正科技有限公司
購買、維修 此手冊零組件
電話： 037-466333
Email: service@repairtw.com
Line id: @zzzz
www.repairtw.com

Angle plug
Maker: Japan Aviation
Type: JL04V-8A28-11SE-EB

[Unit: mm]

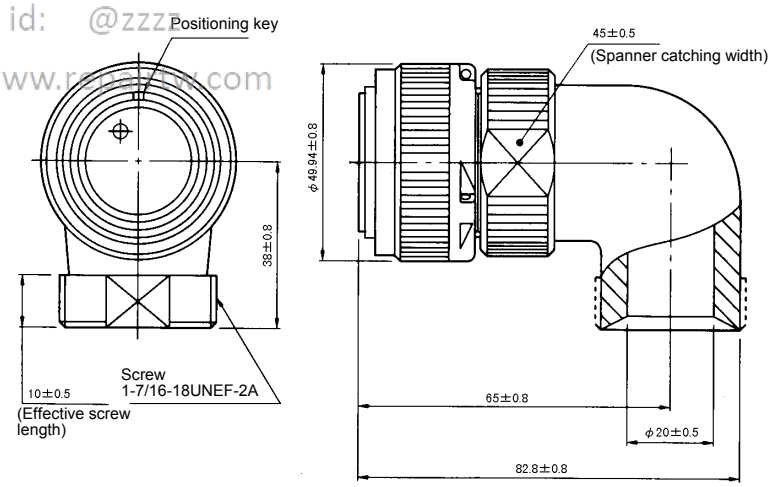

Cable clamp
Maker: Japan Aviation
Type: JL04V-2428CK (17)

Applicable cable diameter:
ø15 to ø18

[Unit: mm]

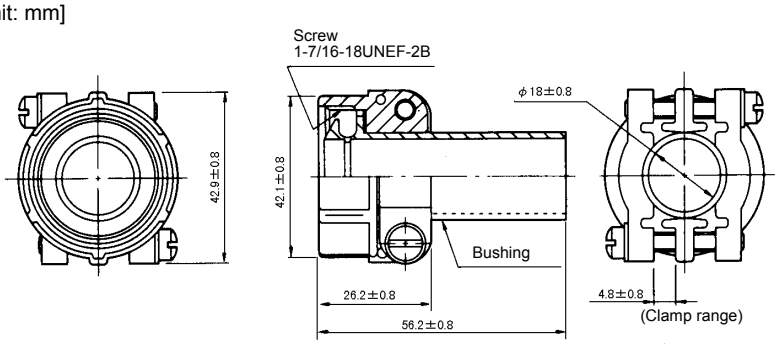

Connector for intelligent servomotor HS-MF

Maker: Japan AMP
<Type>
For power supply
6-pole receptacle/housing: 178289-3
Contact: 1-917511-5 (L1, L2, PE)
1-175217-5 (L11, L12)

For signal
12-pole receptacle/housing: 178289-6
Contact: 1-175217-5

[Unit: mm]

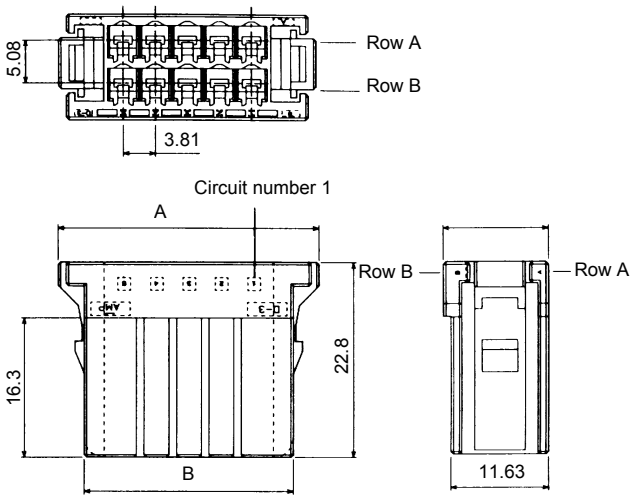

No. of poles	Type	Dimension	
		A	B
6	178289-3	24.36	16.70
12	178289-6	35.09	28.35

上正科技有限公司
購買、維修 此手冊零組件
電話： 037-466333
Email: service@repairtw.com
Line Id: @zzzz
www.repairtw.com

(5) Communication cable assembly

Assemble the cable as shown in the following drawing, with the cable shield wire securely connected to the ground plate of the connector.

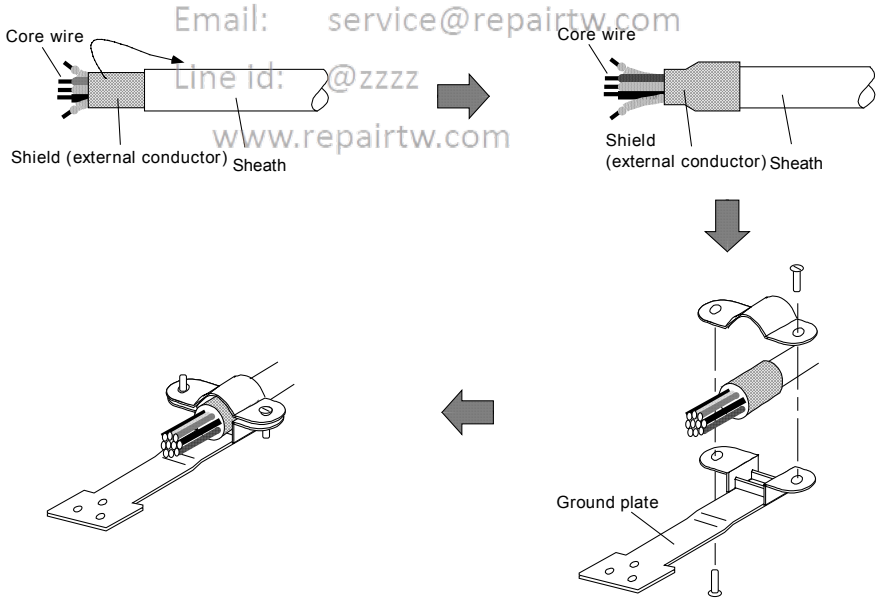

When folding back the shield, fold back the shield over an area covered with vinyl tape or copper tape, and seat onto the fitting surface of the plate screw section so that the shield wire and grounding plate securely contact without play.

⚠ CAUTION Take care not to mistake the connection when manufacturing the cable. Failure to observe this could lead to faults, runaway or fire.

4-1-4 Cable clamp fitting

Use the following types of grounding plate and cable clamp fitting to strengthen the noise resistance of the communication cable. The grounding plate can be installed onto the terminal block cover of the I/F unit (HS-IF-6). Peel part of the cable sheath as shown in the drawing to expose the shield sheath, and press that section against the grounding plate with the cable clamp fitting.

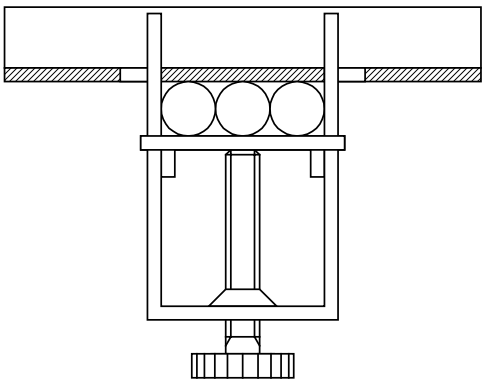

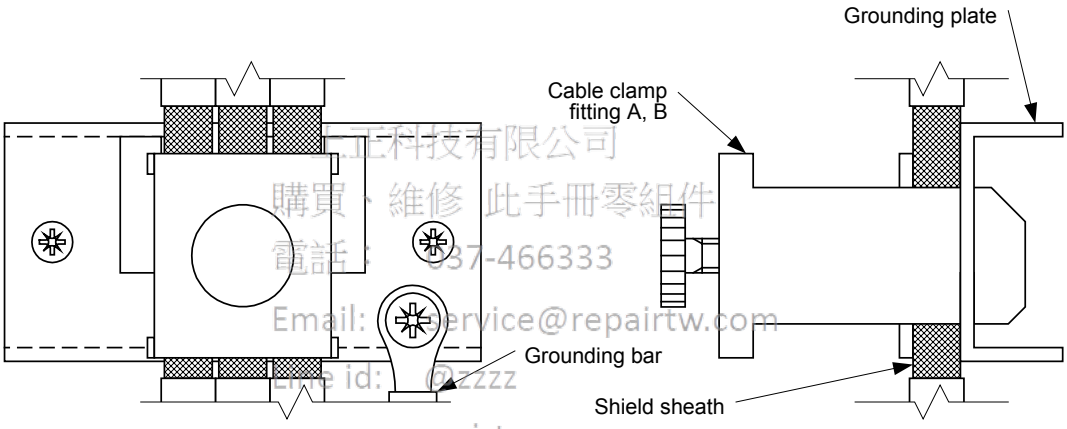

長正科技有限公司
購買、維修 此手冊零組件
電話： 037-466333
Email: service@repairtw.com
Line id: @zzzz
www.repairtw.com

Grounding plate (E) outline

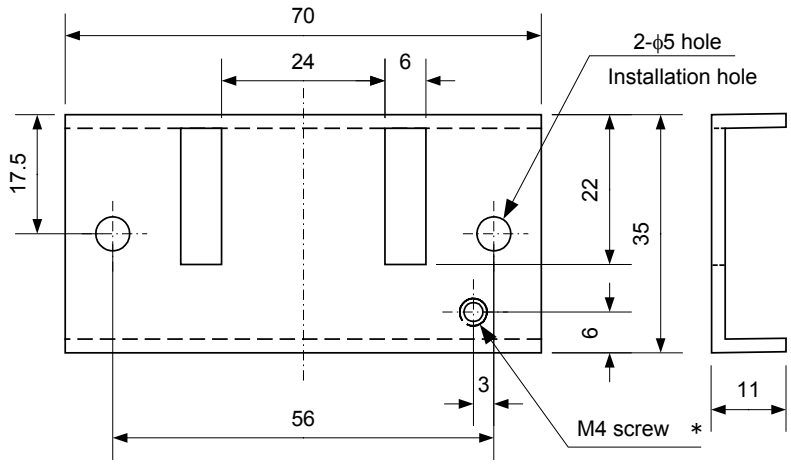

* Always wire the grounding wire from the grounding plate to the cabinet grounding plate.

Cable clamp fitting outline

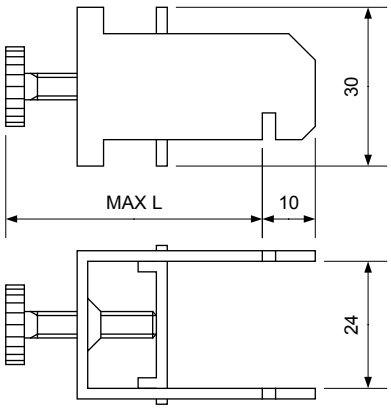

	L
Fitting A	70
Fitting B	45

4-2 Peripheral devices

4-2-1 Selection of wire

Select the interface unit L1, L2, L3 and grounding wires from the following wire sizes according to the total capacity of the connected motors.

Total motor capacity	1kW or less	2.5kW or less	6kW or less	9kW or less	12kW or less
Wire size (mm^2)	IV1.25SQ	IV2SQ	IV3.5SQ	IV5.5SQ	IV8SQ

(Note) The total capacity of the motors connected to the interface unit must be 6kW or less. If the total motor capacity exceeds 6kW, wire with a standalone terminal block.

4-2-2 Selection of no-fuse breakers

Use the following table to obtain the NFB (no-fuse breaker) rated current from the total rated capacity (SVJ2 total output capacity) of the motor driving the SVJ2 servo amplifier to be connected to the NFB to be selected, and select the no-fuse breaker.
When the MDS-B-SPJ2 spindle amplifier or converter unit will share no-fuse breakers, select from the total NFB rated current of each SVJ2 total output capacity and SPJ2 spindle amplifier or convertor unit. However, separate the SVJ2 servo amplifier no-fuse breaker from the others, and select the NF60 type (60A) or smaller capacity dedicated for SVJ2 servo amplifiers if the total NFB rated current exceeds 60A.

NFB rated current table

Intelligent servomotor SVJ2 total output capacity	1.5kW or less	3.5kW or less	7kW or less	10kW or less	13kW or less	16kW or less
NFB rated current	10A	20A	30A	40A	50A	60A

MDS-B-SPJ2	MDS-B-SPJ2-02 MDS-B-SPJ2-04 MDS-B-SPJ2-075 MDS-B-SPJ2-15	MDS-B-SPJ2-22 MDS-B-SPJ2-37	MDS-B-SPJ2-55	MDS-B-SPJ2-75	MDS-B-SPJ2-110
Converter unit	MDS-A-CR-10 MDS-A-CR-15	MDS-A/B-CV-37 MDS-A-CR-22 MDS-A-CR-37	MDS-A/B-CV-55 MDS-A-CR-55	MDS-A/B-CV-75 MDS-A-CR-75	MDS-A-CR-90 MDS-A/B-CV-110
NFB rated current	10A	20A	30A	40A	50A

上正科技有限公司
購買 維修 此手冊零組件
電話: 037466333
Email: service@repairtw.com
Line id: @zzzz
www.repairtw.com

No-fuse breaker selection table

NFB rated current	10A	20A	30A	40A	50A	60A
Recommended NFB (Mitsubishi Electric Corp.: Option part)	NF30-CS3P10A	NF30-CS3P20A	NF30-CS3P30A	NF50-CP3P40A	NF50-CP3P50A	NF60-CP3P60A

Special order part: This part is not handled by the NC Dept. Marketing Section or dealer.

(Example 1)

The NFB is selected for the MDS-B-SVJ2-10 with three HS-SF102 axes and one MDS-B-SPJ2-75 axis connected.

Because there are 1kW × 3 = 3kW on the intelligent servomotor side, 20A is selected from the table for the NFB rated current.
40A is selected from the table for the SPJ2-75 rated current.
Therefore, the total rated current is 60A, and the NF60-CP3P60A is selected.

(Example 2)

The NFB is selected for the MDS-B-SVJ2-20 with two HS-SF202 axes and one MDS-B-CR-90 connected.

Because there are 2kW × 2 = 4kW on the intelligent servomotor side, 30A is selected from the table for the NFB rated current.
50A is selected from the table for the MDS-B-CV-90 rated current.
Therefore, the total rated current is 80A. The NFB is separated from converter unit, and the NF30-CS3P30A is selected for the SVJ2. (Refer to the "MDS-A/B Series Specifications Manual" for details on selecting the converter NFB.)

⚠ **DANGER**	Install independent no-fuse breakers and contactors as the SVJ2 main circuit power supply if the total current capacity exceeds 60A when the power supply is shared between the converter and a large capacity SPJ2 spindle amplifier. No-fuse breakers may not operate for short-circuits in small capacity amplifiers if they are shared with a large capacity unit, and this could cause fires. Select a capacity of NF60 or less for the intelligent servomotor and SVJ2 servo amplifier.

4-2-3 Selection of contactor

Select the contactor based on section "(1) Selection from rush current" when the system connected to the contactor to be selected is intelligent servomotor, an MDS-B-SVJ2 servo amplifier and 3.7kW or less MDS-B-SPJ2 spindle amplifier.
When a converter unit or 5.5kW or more MDS-B-SPJ2 spindle amplifier is included, calculate both the capacities in sections "(1) Selection from rush current" and "(2) Selection from input current", and select the larger of the two capacities.

(1) Selection from rush current

Use the following table to select the contactors so the total rush current for each unit does not exceed the closed circuit current amount.

Rush current table

Intelligent servomotor	HS-RF43, HS-RF73 HS-SF52, HS-SF53	HS-MF23 HS-SF102, HS-SF103 HS-SF202
Rush current	45A	100A

MDS-B-SVJ2	MDS-B-SVJ2-01 MDS-B-SVJ2-03 MDS-B-SVJ2-04	MDS-B-SVJ2-06	MDS-B-SVJ2-07	MDS-B-SVJ2-10 MDS-B-SVJ2-20
Rush current	45A	50A	70A	100A

MDS-B-SPJ2	MDS-B-SPJ2-02 MDS-B-SPJ2-04	MDS-B-SPJ2-075	MDS-B-SPJ2-15 MDS-B-SPJ2-22 MDS-B-SPJ2-37	MDS-B-SPJ2-55 MDS-B-SPJ2-75 MDS-B-SPJ2-110
Rush current	45A	50A	100A	15A

Converter unit	MDS-A-CR-10 to MDS-A-CR-90 MDS-A/B-CV-37 to MDS-A/B-CV-75	MDS-A/B-CV-110
Rush current	15A	40A

上正科技有限公司
購買、維修 此手冊零組件
電話： 037-466333
Email: service@repairtw.com
Line id: @zzzz
www.repairtw.com

Contactor selection table 1

Contactor closed current capacity (Total rush current)	110A	200A	220A	300A	400A	550A	650A	850A
Recommended contactor (Mitsubishi Electric Corp.: Option part)	S-N10 AC200V	S-N18 AC200V	S-N20 AC200V	S-N25 AC200V	S-N35 AC200V	S-K50 AC200V	S-K65 AC200V	S-K80 AC200V

Special order part: This part is not handled by the NC Dept. Marketing Section or dealer.

(Example 1)

The contactor is selected for the MDS-B-SVJ2-10 with three HS-SF102 axes and one MDS-B-SPJ2-37 axis connected.

< Selection only from rush current >
(HS-SF102 × 3 axes rush current) + (SPJ2-37 × 1 axis rush current)
= 3 × 100A + 1 × 100A = 400A
Therefore, S-N35 200VAC is selected.

(2) Selection from input current

Use the following table to select the contactors so the total input current for each unit does not exceed the rated continuity current.

Input current table

Intelligent servomotor MDS-B-SVJ2 total output capacity	1.5kW or less	3.5kW or less	7kW or less	10kW or less	13kW or less	16kW or less
Input current	10A	20A	30A	40A	50A	60A

MDS-B-SPJ2	MDS-B-SPJ2-02 MDS-B-SPJ2-04 MDS-B-SPJ2-075 MDS-B-SPJ2-15	MDS-B-SPJ2-22 MDS-B-SPJ2-37	MDS-B-SPJ2-55	MDS-B-SPJ2-75	MDS-B-SPJ2-110
Input current	10A	20A	30A	40A	50A

Converter unit	MDS-A-CR-10 MDS-A-CR-15	MDS-A/B-CV-37 MDS-A-CR-22 MDS-A-CR-37	MDS-A/B-CV-55 MDS-A-CR-55	MDS-A/B-CV-75 MDS-A-CR-75	MDS-A-CR-90 MDS-A/B-CV-110
Input current	10A	20A	30A	40A	50A

Contactor selection table 2

Contactor rated continuity current (Total input current)	20A	32A	50A	60A
Recommended contactor (Mitsubishi Electric Corp.: Option part)	S-N10 AC200V	S-N20 AC200V	S-N25 AC200V	S-N35 AC200V

Special order part: This part is not handled by the NC Dept. Marketing Section or dealer.

上正科技有限公司
購買、維修 此系列零組件
電話： 037-466333
Email: service@repairtw.com
Line id: @zzzz
www.repairtw.com

(Example 2)

The contactor is selected for the MDS-B-SVJ2-10 with four HS-SF102 axes and one MDS-B-CV-55 connected.

< Selection from rush current >
(HS-SF102 × 4 axes rush current) + (MDS-B-CV-55 rush current) = 4 × 100A + 15A = 415A
Therefore, S-K50 200VAC.

< Selection from input current >
(JS-SF102 × 4 axes input current) + (MDS-B-CV-55 input current) = 30A + 30A = 60A
Therefore, S-N35 200VAC.
From these, the S-K50 200VAC is selected as having the larger of the two capacities.

4-2-4 Circuit protector

When installing a circuit protector dedicated for the control power input, use a circuit protector with inertial delay to prevent malfunctioning in respect to the rush current generated when the power is turned ON. The size and conductivity time of the rush current fluctuate according to the power supply impedance and potential.

Servo amplifier	Rush current	Conductivity time
Intelligent servomotor	70 to 130A	0.5 to 1msec

Recommended circuit protector (Mitsubishi Electric Corp.: Option part)	CP30-BA type with medium-speed inertial delay
Rated current	0.2A per axis

Special order part: This part is not handled by the NC Department Marketing Section or dealer.

Chapter 5 Installation

5-1 Installation of servomotor 5-3
5-1-1 Environmental conditions 5-3
5-1-2 Cautions for mounting load (prevention of impact on shaft) 5-3
5-1-3 Installation direction 5-3
5-1-4 Tolerable load of axis 5-4
5-1-5 Oil and waterproofing measures 5-4
5-1-6 Cable stress 5-5
5-2 Installation of interface unit 5-6
5-2-1 Environmental conditions 5-6
5-2-2 Installation direction 5-6
5-2-3 Prevention of entering of foreign matter 5-6
5-3 Noise measures 5-7

上正科技有限公司
購買、維修 此手冊零組件
電話： 037-466383
Email: service@repairtw.com
Line id: @zzzz
www.repairtw.com

⚠ CAUTION

1. Install the unit on noncombustible material. Direct installation on combustible material or near combustible materials could lead to fires.
2. Follow this Instruction Manual and install the unit in a place where the weight can be borne.
3. Do not get on top of or place heavy objects on the unit.
   Failure to observe this could lead to injuries.
4. Always use the unit within the designated environment conditions.
5. Do not let conductive objects such as screws or metal chips, etc., or combustible materials such as oil enter the servo amplifier or servomotor.
6. Do not block the servo amplifier intake and outtake ports. Doing so could lead to failure.
7. The servo amplifier and servomotor are precision devices, so do not drop them or apply strong impacts to them.
8. Do not install or run a servo amplifier or servomotor that is damaged or missing parts.
9. When storing for a long time, please contact your dealer.

上正科技有限公司
購買、維修 此手冊零組件
電話： 037-466333
Email: service@repairtw.com
Line id: @zzzz
www.repairtw.com

5-1 Installation of servomotor

⚠ CAUTION

1. Do not hold the cables, axis or detector when transporting the servomotor. Failure to observe this could lead to faults or injuries.
2. Securely fix the servomotor to the machine. Insufficient fixing could lead to the servomotor deviating during operation. Failure to observe this could lead to injuries.
3. When coupling to a servomotor shaft end, do not apply an impact by hammering, etc. The detector could be damaged.
4. Never touch the rotary sections of the servomotor during operations. Install a cover, etc., on the shaft.
5. Do not apply a load exceeding the tolerable load onto the servomotor shaft. The shaft could break.

5-1-1 Environmental conditions

Environment	Conditions	
Ambient temperature	0°C to +40°C (with no freezing)	
Ambient humidity	80% RH or less (with no dew condensation)	
Storage temperature	–20°C to +65°C (with no freezing)	
Storage humidity	90% RH or less (with no dew condensation)	
Atmosphere	• Indoors (Where unit is not subject to direct sunlight) • With no corrosive gas or combustible gas. • With no oil mist or dust	
Altitude	1000m or less above sea level	
Vibration	HS-MF	X, Y: 19.6m/s^2 (2G) or less
	HS-RF HS-SF 1kW or less	X: 9.8m/s^2 (1G) or less Y: 24.5m/s^2 (2.5G) or less
	HS-SF 2kW	X: 19.6m/s^2 (2G) or less Y: 49m/s^2 (5G) or less

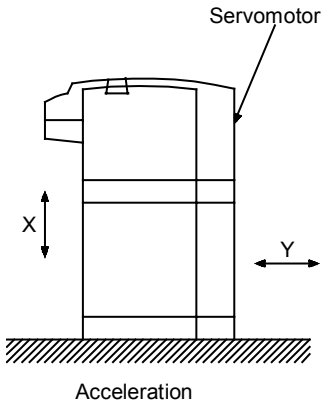

5-1-2 Cautions for mounting load (prevention of impact on shaft)

(1) When using the servomotor with key way, use the screw hole at the end of the shaft to mount the pulley onto the shaft. To install, first place the double-end stud into the shaft screw holes, contact the coupling end surface against the washer, and press in as if tightening with a nut. When the shaft does not have a key way, use a frictional coupling, etc.
(2) When removing the pulley, use a pulley remover, and make sure not to apply an impact on the shaft.
(3) Install a protective cover on the rotary sections such as the pulley installed on the shaft to ensure safety.
(4) The direction of the detector installation on the servomotor cannot be changed.

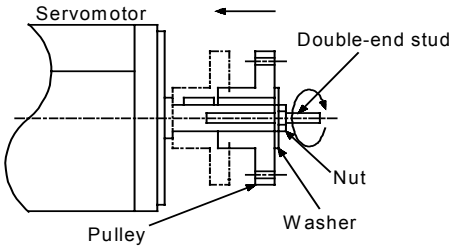

⚠ CAUTION

Never hammer the end of the shaft during assembly.

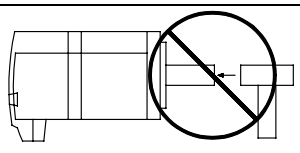

5-1-3 Installation direction

There are no restrictions on the installation direction. Installation in any direction is possible, but as a standard the servomotor is installed so that the motor power supply wire and detector cable cannon plugs (lead-in wires) face downward. When the servomotor is not installed in the standard direction, refer to section "5-1-5 Oil and waterproofing measures" and take the appropriate measures.
The brake plates may make a sliding sound when a servomotor with magnetic brake is installed with the shaft facing upward, but this is not a fault.

5-1-4 Tolerable load of axis

(1) Using the flexible coupling, set the axis core deviation to less than the tolerable radial load of the axis.
(2) When using a pulley, sprocket and timing belt, select so that the loads are within the tolerable radial load.
(3) A rigid coupling must not be used as it will apply an excessive bending load on the axis to break.

Servomotor	Tolerable radial load		Tolerable thrust load
HS-MF23	88N	L=25	59N
HS-RF43/73	392N	L=58	196N
HS-SF52/53/102/103	392N	L=58	196N
HS-SF202	2058N	L=79	980N

Caution: The symbols in the table follow the drawing below.

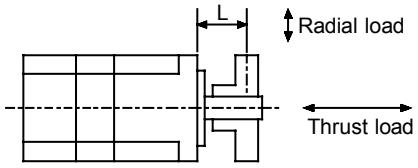

L : Length from flange isntallation surface to center of load weight [mm]

上正科技有限公司
購買、維修此手冊專線
電話：(07)4635333
Email：service@cpsh.com.tw
Line id：@cpsh
www.cpsh.com.tw

⚠ CAUTION

1. When coupling with a ball screw, etc., use a flexible coupling, and keep the shaft core deviation to below the tolerable radial load.
2. When installing the pulleys or gears on the motor shaft, the radial load will increase as the diameter of these parts decreases. Consider this when designing the machine.
3. When using a timing belt, adjust so that the radial load (double the tension) generated from the tension is less than the values given above.
4. In a machine having a thrust load, such as a worm gear, provide a separate bearing on the machine side so that the a load exceeding the tolerable thrust load is not applied on the motor.
5. Do not use a rigid coupling as an excessive bending load will be applied on the shaft and could cause the shaft to break.

5-1-5 Oil and waterproofing measures

(1) The servomotor does not have a precise water or oil-proof structure. The type (IP class) following the IEC standards is indicated as the intelligent servomotor's protection type. These standards are the short-time performance standards, so make sure that the motor surface is not subject to fluids and that fluids do not accumulate. If cutting oil, etc., could enter, always provide a protective cover. Always consider the cover seams, edges, shapes and dimensions. Note that the IP class does not indicate the corrosion resistance level.

(2) When a gear box is installed on the servomotor, make sure that the oil level height from the center of the shaft is higher than the values given below. Open a breathing hole on the gear box so that the inner pressure does not rise.

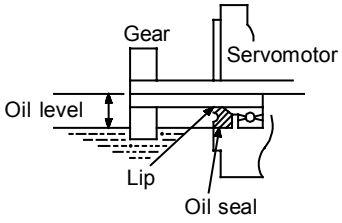

Servomotor	Oil level (mm)
HS-MF23	12
HS-RF43, 73, -SF103	20
HS-SF202	25

(3) When installing the servomotor horizontally, set the power cable and detector cable to face downward.
When installing vertically or on an inclination, provide a cable trap.

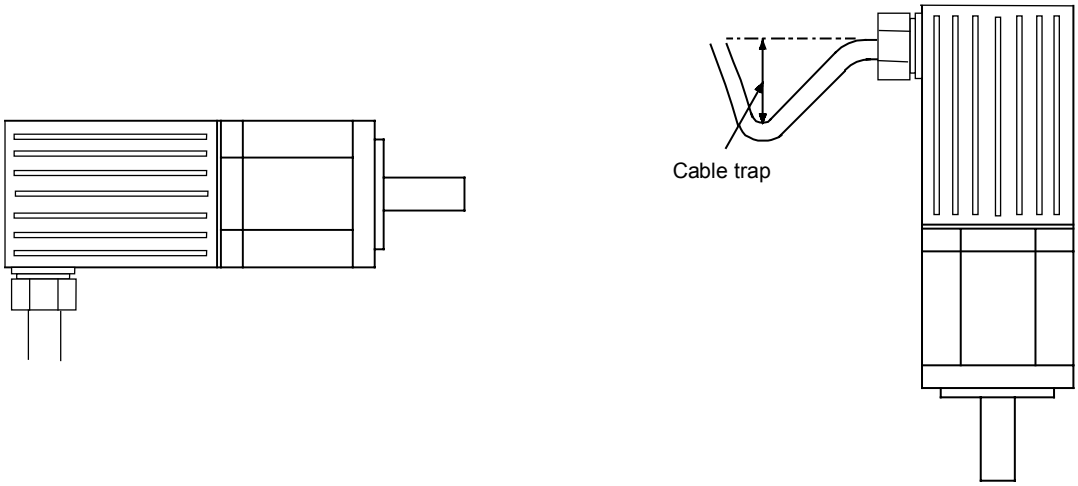

(4) Do not use the unit with the cable submerged in oil or water. (Refer to lower left drawing)
(5) When installing on the top of the shaft end, make sure that oil from the gear box, etc., does not enter the servomotor.

上正科技有限公司
購買、維修 此手冊零組件
電話： 037-466333
Email: service@repairtw.com
line id: @zzzz
www.repairtw.com

<Fault> Capillary tube phenomenon

(6) Connect the HS-MF23 relay connector in a relay box having a structure (IP54) that prevents water, oil and dust, etc., from entering. Fix the enclosed cable to the motor, and also fix the enclosed cable to the motor.

5-1-6 Cable stress

(1) Sufficiently consider the cable clamping method so that bending stress and the stress from the cable's own weight is not applied on the cable connection.
(2) In applications where the servomotor moves, make sure that excessive stress is not applied on the cable.
Select the cable bending radius from the required bending life and wire type.
Fix the detector cable and power cable enclosed with the servomotor.
(3) Make sure that the cable sheathes will not be cut by sharp cutting chips, worn by contacting the machine corners, or stepped on by workers or vehicles.

5-2 Installation of interface unit

5-2-1 Environmental conditions

Environment	Conditions
Ambient temperature	0°C to +55°C (with no freezing)
Ambient humidity	90% RH or less (with no dew condensation)
Storage temperature	–20°C to +65°C (with no freezing)
Storage humidity	90% RH or less (with no dew condensation)
Atmosphere	Indoors (Where unit is not subject to direct sunlight) With no corrosive gas, combustible gas, oil mist or dust
Altitude	1000m or less above sea level
Vibration	5.9m/sec^2 (0.6G) or less

5-2-2 Installation direction

Install so that the front of the interface unit is visible and the terminal block comes to the bottom.

5-2-3 Prevention of entering of foreign matter

Treat the cabinet with the following items.

- Make sure that the cable inlet is dust and oil proof by using packing, etc.
- Make sure that the external air does not enter inside by using head radiating holes, etc.
- Close all clearances.
- Securely install door packing.
- If there is a rear cover, always apply packing.
- Oil will tend to accumulate on the top. Take special measures such as oil-proofing the top so that oil does not enter the cabinet from the screw holds.
- After installing each unit, avoid machining in the periphery. If cutting chips, etc., stick onto the electronic parts, trouble may occur.

上正科技有限公司
購買 維修 此手冊零組件
電話： 037-466333
Email: service@repairtw.com
Line id: @zzzz
www.repairtw.com

5-3 Noise measures

Noise includes that which enters the servo amplifier from an external source and causes the servo amplifier to malfunction, and that which is radiated from the servo amplifier or motor and causes the peripheral devices or amplifier itself to malfunction. The servo amplifier output is a source of noise as the DC voltage is switched at a high frequency. If the peripheral devices or amplifier malfunction because of the noise, measures must be taken to suppressed this noise. These measures differ according to the propagation path of the noise.

(1) General measures for noise

Avoid wiring the servo amplifier's power supply wire and signal wires in parallel or in a bundled state. Always use separate wiring. Use a twisted pair shield wire for the detector cable, the control signal wires for the bus cable, etc., and for the control power supply wire. Securely ground the shield.
Use one-point grounding for the servo amplifier and motor.

(2) Measures against noise entering from external source and causing servo amplifier to malfunction

If a device generating noise is installed near the servo amplifier, and the servo amplifier could malfunction, take the following measures.
Install a surge killer on devices (magnetic contactor, relay, etc.) that generate high levels of noise.
Install a data line filter on the control signal wire.
Ground the detector cable shield with a cable clamp.

(3) Measures against noise radiated from the servo amplifier and causing peripheral devices to malfunction

The types of propagation paths of the noise generated from the servo amplifier and the noise measures for each propagation path are shown below.

上正科技有限公司
購買 維修 此手冊零組件
電話： 037-466333
Email: service@repairtw.com
line id: @zzzz
www.repairtw.com

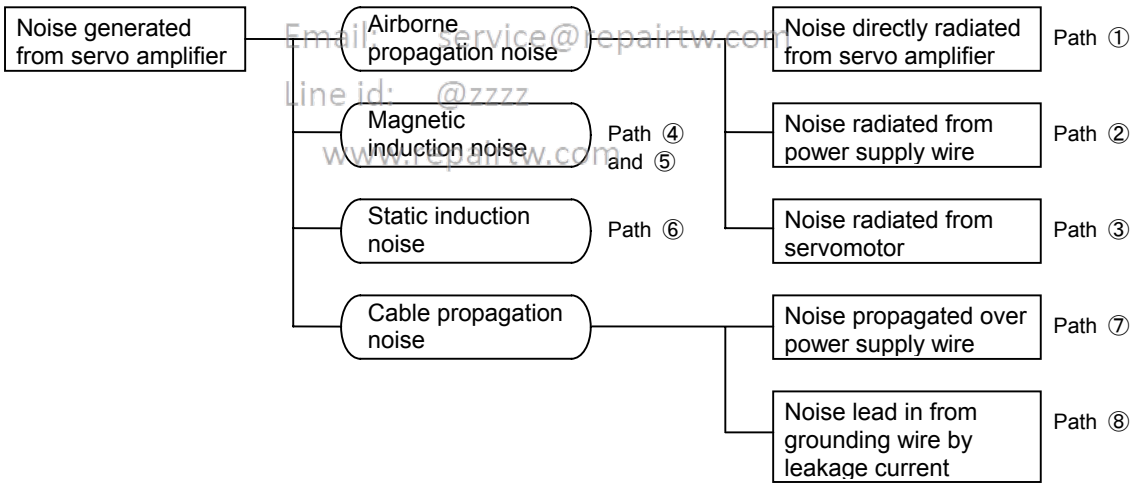

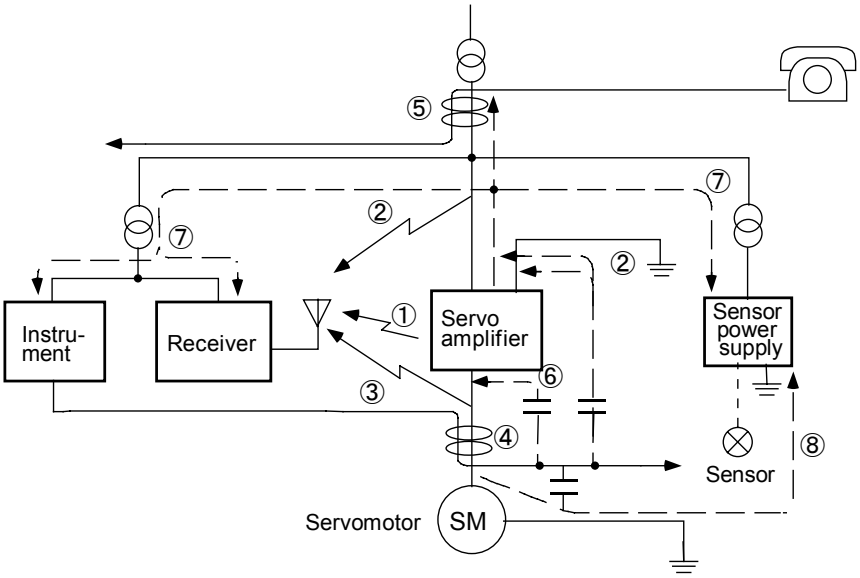

Noise propaga-tion path	Measures
① ② ③	When devices such as instruments, receivers or sensors, which handle minute signals and are easily affected by noise, or the signal wire of these devices, are stored in the same panel as the servo amplifier and the wiring is close, the device could malfunction due to airborne propagation of the noise. In this case, take the following measures. (1) Install devices easily affected as far away from the servo amplifier as possible. (2) Lay the signals wires easily affected as far away from the input wire with the servo amplifier. (3) Avoid parallel wiring or bundled wiring of the signal wire and power wire. (4) Insert a line noise filter on the input/output wire or a radio noise filter on the input to suppress noise radiated from the wires. (5) Use a shield wire for the signal wire and power wire, or place in separate metal ducts.
④ ⑤ ⑥	If the signal wire is laid in parallel to the power wire, or if it is bundled with the power wire, the noise could be propagated to the signal wire and cause malfunction because of the magnetic induction noise or static induction noise. In this case, take the following measures. (1) Install devices easily affected as far away from the servo amplifier as possible. (2) Lay the signals wires easily affected as far away from the input wire with the servo amplifier. (3) Avoid parallel wiring or bundled wiring of the signal wire and power wire. (4) Use a shield wire for the signal wire and power wire, or place in separate metal ducts.
⑦	If the power supply for the peripheral devices is connected to the power supply in the same system as the servo amplifier, the noise generated from the servo amplifier could back flow over the power supply wire and cause the devices to malfunction. In this case, take the following measures. (1) Install a radio noise filter on the servo amplifier's power wire. (2) Install a line noise filter on the servo amplifier's power wire.
⑧	If a closed loop is structured by the peripheral device and servo amplifier's grounding wires, the leakage current could penetrate and cause the devices to malfunction. In this case, change the device grounding methods and the grounding place.

维库 维修此手册专用章
电话: 037-466333
Email: service@repairtw.com
Line id: @zzzz
www.repairtw.com

Chapter 6 Wiring

6-1 System connection diagram 6-3
6-2 Connector 6-4
6-2-1 Connector signal layout 6-4
6-2-2 Signal name 6-5
6-3 Connection of power supply 6-6
6-3-1 Example of connection for controlling magnetic switch (MC) with MDS-B-CV/CR 6-6
6-3-2 Example of connection for controlling magnetic switch with external sequence circuit 6-8
6-3-3 Wiring of contactors (MC) 6-8
6-3-4 Surge absorber 6-9
6-4 Wiring the motor with brakes 6-9
6-4-1 Connection example 6-9
6-4-2 Manually releasing the magnetic brakes 6-10
6-5 Connection with the NC 6-11
6-5-1 Connection system 6-11

上正科技有限公司
購買、維修 此手冊零組件
電話： 037-466333
Email: service@repairtw.com
Line id: @zzzz
www.repairtw.com

DANGER

1. Wiring work must be done by a qualified technician.
2. Wait at least 10 minutes after turning the power OFF and check the voltage with a tester, etc., before starting wiring. Failure to observe this could lead to electric shocks.
3. Securely ground the servo amplifier and servomotor with Class 3 grounding or higher.
4. Wire the servo amplifier and servomotor after installation. Failure to observe this could lead to electric shocks.
5. Do not damage, apply forcible stress, place heavy items or engage the cable. Failure to observe this could lead to electric shocks.

CAUTION

1. Correctly and securely perform the wiring. Failure to do so could lead to runaway of the servomotor.
2. Do not mistake the terminal connections.
   Failure to observe this item could lead to ruptures or damage, etc.
3. Do not mistake the polarity (⊕, ⊖). Failure to observe this item could lead to ruptures or damage, etc.
4. Electronic devices used near the servo amplifier may receive magnetic obstruction. Reduce the effect of magnetic obstacles by installing a noise filter, etc.
5. Do not modify this unit.

上正科技有限公司
購買、維修 此手冊零組件
電話： 037-466333
Email: service@repairtw.com
Line id: @zzzz
www.repairtw.com

6-1 System connection diagram

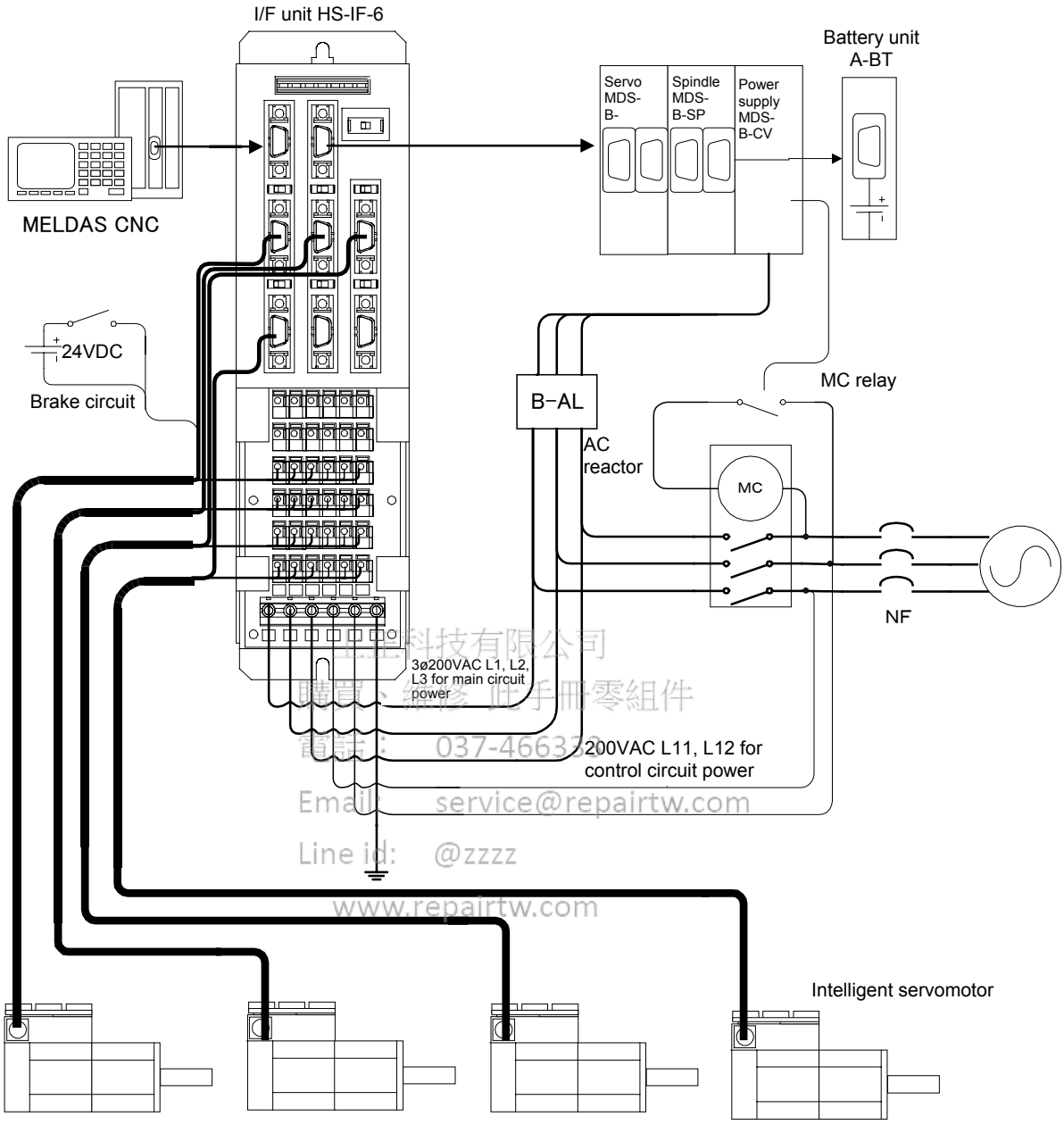

正正科技有限公司
購買、維修 此手冊零組件
電話： 037-466332
Email: service@repairtw.com
Line id: @zzzz
www.repairtw.com

Note)

1) Keep the cable length to within 30m.
2) This is a motor with magnetic brakes. The power connected to the magnetic brake does not have a polarity.
3) Securely connect the shield wire to the plate (grounding plate) in the connector.
4) When using as an absolute connector, connect MDS-A-BT□.

6-2 Connector

⚠ **CAUTION**	Never connect the power wire to the signal terminal or the signal wire to the power terminal. There is a risk of electric shock. Failure to observe this can also cause damage or faults with the NC unit or devices connected to the NC.
⚠ **DANGER**	Apply only the designated voltage to each terminal. Failure to observe this could lead to damage or faults.

6-2-1 Connector signal layout

(1) HS-RFxxE, HS-SFxxE

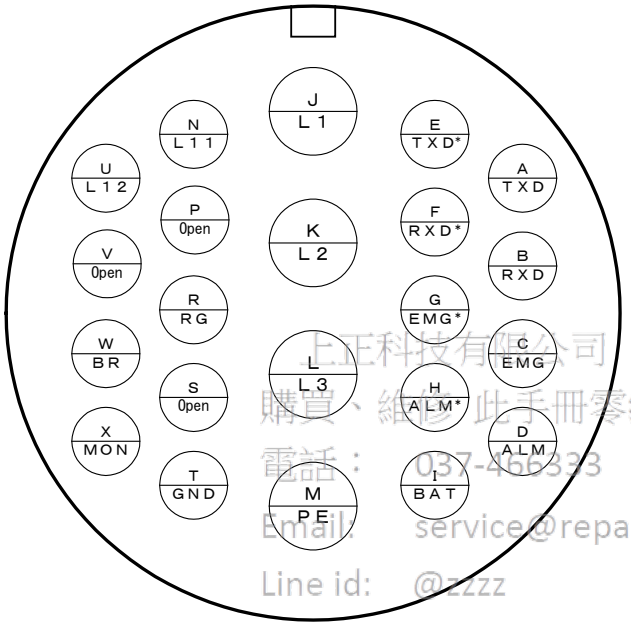

上正科技有限公司
購買、維修此手冊零組件
電話： 037-466333
Email: service@repairtw.com
Line id: @zzzz
www.repairtw.com

(Japan Aviation) Applicable connector: JL04V-28A28-11PE

(2) HS-MF23E

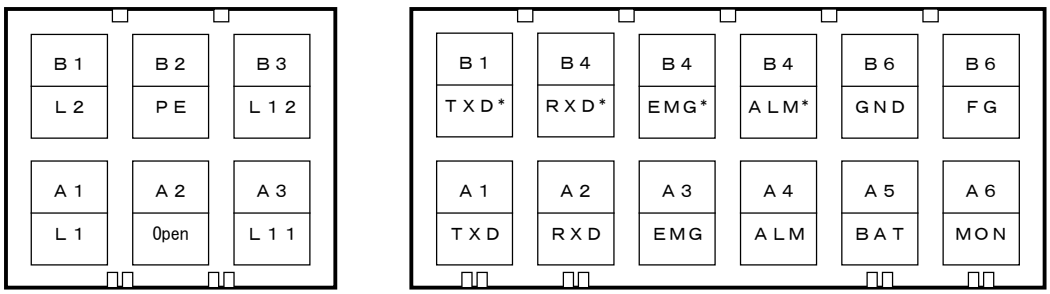

Applicable connector:
Power connector : 178964-3 (AMP)
Signal connector : 178964-6 (AMP)

6-2-2 Signal name

Name		Signal name	Details
Power supply	L1·L2·L3	Main circuit power supply	Main circuit power supply input terminal Connect 3-phase 200 to 230VAC, 50/60Hz.
	L11·L12	Control circuit power supply	Control circuit power supply input terminal Connect 1-phase 200 to 230VAC, 50/60Hz.
	PE	Protective ground	Grounding terminal Connect and ground with the servomotor grounding terminal.
Control signal	TXD, TXD*	NC transmission data	For NC connection
	RXD, RXD*	NC reception data	
	MON	Monitor output	
	FG	Ground	
	EMG, EMG*	Emergency stop	
	ALM, ALM*	Alarm	
	BAT	Battery	
	GND	Ground	
Brake	RG	Power supply for magnetic brakes	Connect the 24VDC for the magnetic brakes. (Only when brakes are provided.) The power supply polarity is irrelevant.
	BR		

上正科技有限公司
購買、維修 此手冊零組件
電話： 037-466333
Email: service@repairtw.com
Line id: @zzzz
www.repairtw.com

6-3 Connection of power supply

⚠ CAUTION

1. Keep the power voltage and capacity within the controller's specification range. Failure to observe this could lead to damage or faults.
2. For safety purposes, always install a no-fuse breaker or earth leakage breaker, and shut off when an error occurs or before inspecting. A large rush current flows when the power is turned ON. Refer to Chapter 6 and select the no-fuse breaker or earth leakage breaker.
3. For safety purposes, install a magnetic switch that shuts off when an error occurs. If the converter unit MDS-B-CV is provided in the system, use the converter's magnetic switch control function. The magnetic switch can be directly driven by the MDS-B-CV.

6-3-1 Example of connection for controlling magnetic switch (MC) with MDS-B-CV/CR

The following connection example applies when the power supply unit MDS-B-CV/CVE/CR is provided in the system.
The magnetic switch can also be controlled by the MDS-B-SVJ2/SPJ2. Refer to the respective unit's specification manual for details.

(1) When sharing a power supply unit and power supply

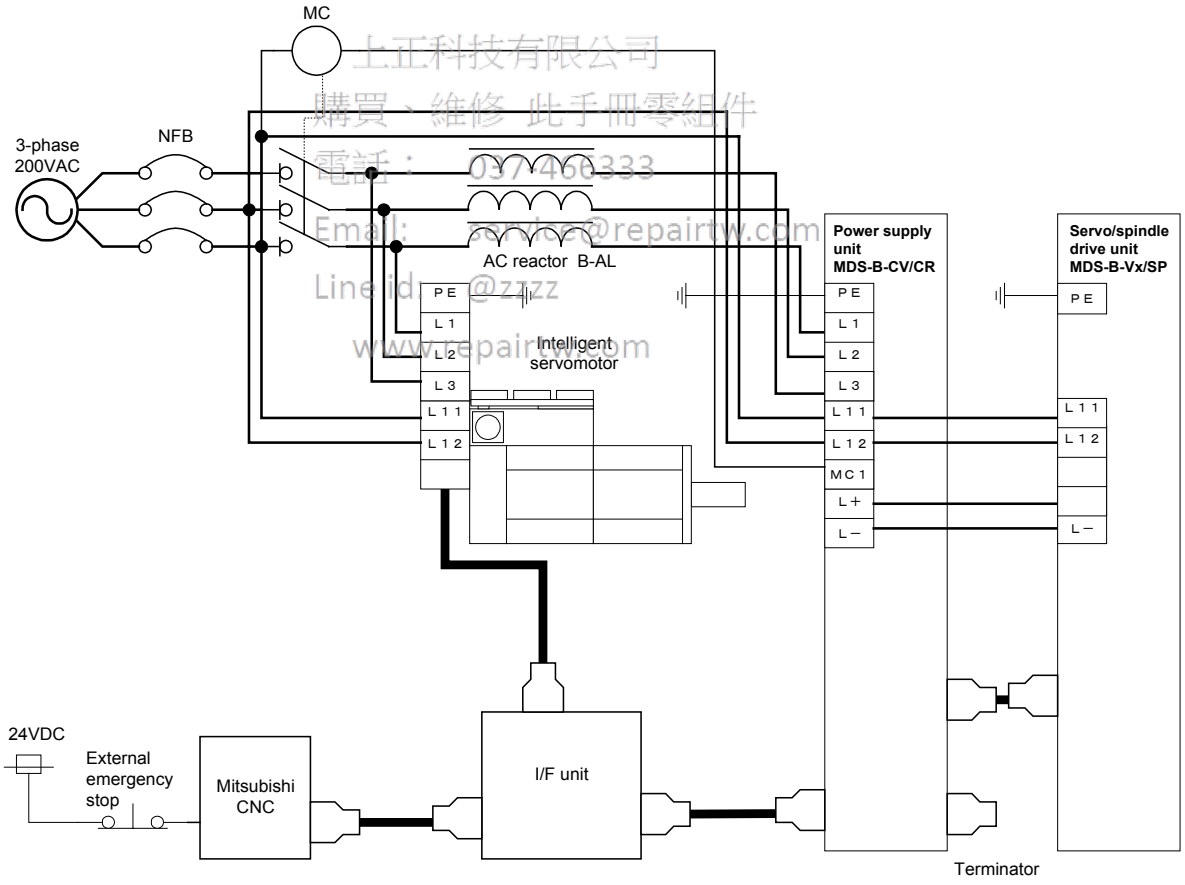

上正科技有限公司
購買、維修 此手冊零組件
電話： 037-460333
Email: service@repairtw.com
Line id: @zzzz
www.repairtw.com

⚠ CAUTION

1. The MDS-B-CV is a power supply regenerative type converter; an AC reactor is required in the power supply line.
   Connect the intelligent servomotor main circuit power supply on the power supply side of the AC reactor.
2. A no-fuse breaker and contactor cannot be shared when the rated current of the no-fuse breaker exceeds 60A.

(2) When not sharing a converter and power supply

If the rated current exceeds 60A by the selection of the no-fuse breaker when the converter and power supply are shared, install the no-fuse breakers and contactors separate from the converter unit.

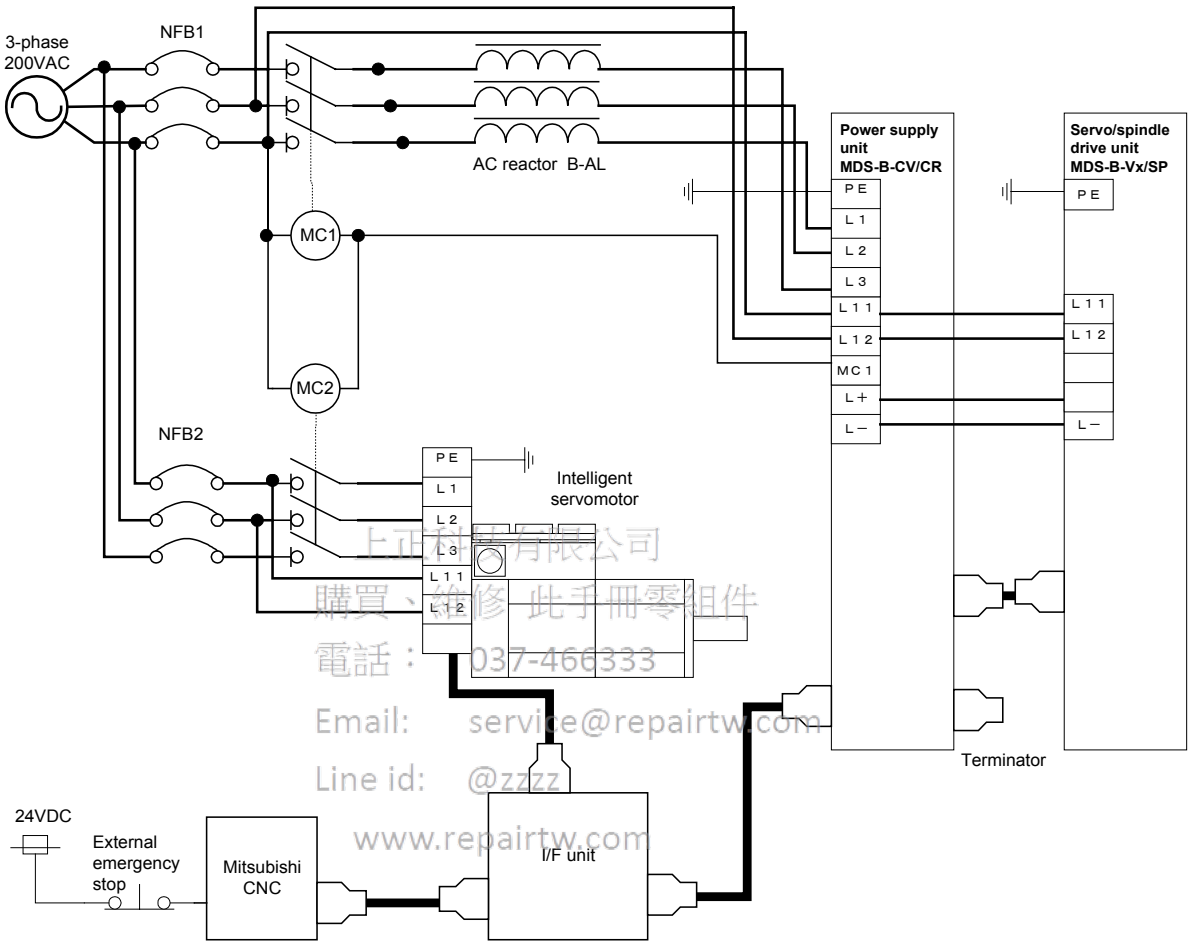

上正科技有限公司
購買、維修 此手冊零組件
電話： 037-466333
Email: service@repairtw.com
Line id: @zzzz
www.repairtw.com

⚠ DANGER

Install independent no-fuse breakers as the intelligent servomotor power supply if the total current capacity exceeds 60A when the converter and power supply are shared.
No-fuse breakers may not operate for short-circuits in small capacity amplifiers if they are shared with a large capacity unit, and this could cause fires. For the intelligent servomotor, use an NF60 type or lower capacity breaker.
(Refer to section 4.)

6-3-2 Example of connection for controlling magnetic switch with external sequence circuit

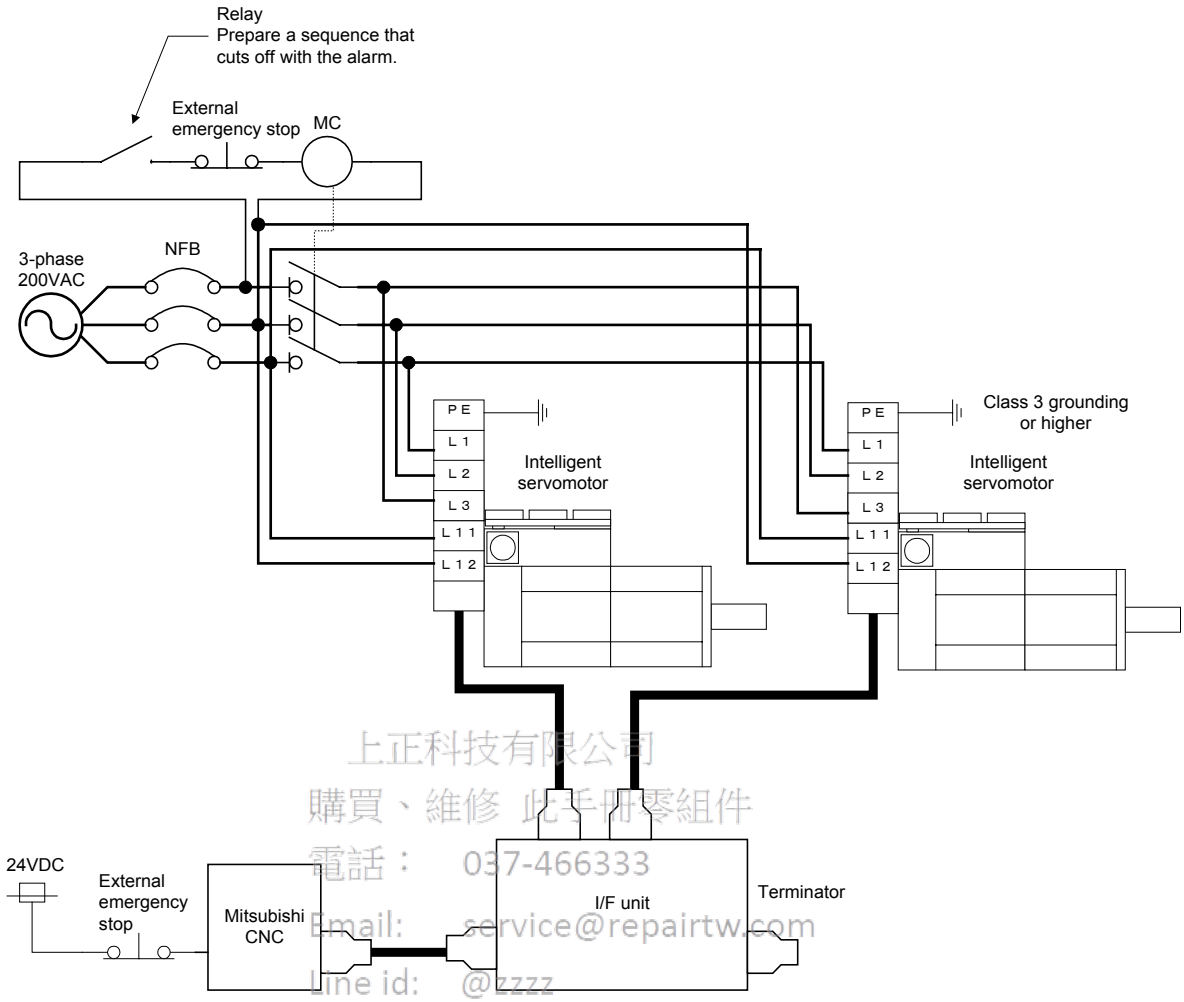

上正科技有限公司
購買、維修 此手冊零組件
電話： 037-466333
Email: service@repairtw.com
line id: @zzzz
www.repairtw.com

6-3-3 Wiring of contactors (MC)

A contactor (magnetic contactor) is inserted in the main circuit power supply input (L1, L2, L3) of servo amplifier, and the power supply input is shut off when an emergency stop or servo alarm occurs.
When an emergency stop or servo alarm occurs, the servo amplifier stops the motor using deceleration control or a dynamic brake. The contactors cannot be shut off during deceleration control, because the regeneration energy (MDS-B-CV Series) is returned to the power supply, and the power supply for deceleration must be held. Therefore, the CNC controls the contactors. The CNC confirms that all axes are stopped, or confirms the dynamic brake operation. Then it outputs a shutoff command for amplifiers that drive contactors.
When actually driving the contactor, it is driven by the amplifier of the axis having the longest deceleration time constant in consideration of the communication from the NC being cut off. Generally, when a converter (MDS-B-CV/CVE/CR) is provided, the contact is driven by the converter. When a spindle amplifier is provided, the contactor is driven by the spindle amplifier, and when the servo amplifier (MDS-B-SVJ2) is provided, the contact is driven by the servo amplifier.
Give consideration to the above, and examine the contactor drive method in the following order of priority.

(Order of priority of the contactor drive method)

1. Using the contactor control output (MC1) of the converter unit.
2. Driven by spindle amplifier (MDS-B-SPJ2 in this case).
3. Driving from the servo amplifier (MDS-B-SVJ2) of the vertical axis (unbalanced axis).
4. Driving from the servo amplifier (MDS-B-SVJ2) having the longest deceleration time constant.
5. Driven by external sequence (only for intelligent servomotor.)

⚠ CAUTION

Directly cut off the contact with an external sequence only when using the intelligent servomotor. In this case, cut off the power supply with a delay longer than the servo's acceleration/deceleration time constant in respect to the emergency stop signal. If the input power is cut off during deceleration control, the undervoltage alarm could occur or the deceleration control may be prevented.

6-3-4 Surge absorber

As protection against surge voltage caused by lightning, etc., the surge absorber and radio noise filter shown below are built into the intelligent servomotor's I/F unit MDS-B-HSIF (refer to Chapter 6) and the MDS-B-CV AC reactor B-ALxx. When not using these simultaneously, install a surge absorber and filter on the input power supply as shown below. Refer to the following table and select the surge absorber.

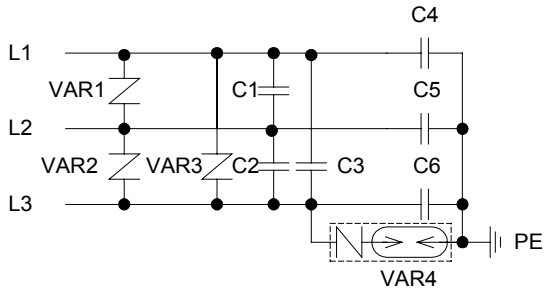

Symbol	Type	Maker	Rating
VAR1 to VAR3	TNR23G471K	MARCON ELECTRONICS CO., LTD.	Varistor voltage 423 to 517V
VAR4	DSAZR2-302M	Mitsubishi Materials Corp.	DC discharge start voltage 2400 to 3600V
C1 to C3	AL-U2E224K	SHIZUKI ELECTRONIC CO., INC.	250VAC 0.22μF
C4 to C6	DE7120F332MVA-1KC	Murata Manufacturing Co., Ltd.	2500VAC 3300pF

上正科技有限公司
購買、維修此手冊零組件
電話： 037-466333
Email: service@repairtw.com
Line id: @e2222
www.repairtw.com

6-4 Wiring the motor with brakes

⚠ CAUTION

1. No mechanical guarantee is provided even when the dynamic brakes are used. If the machine could drop during a power failure, use a motor with magnetic brakes or provide an external brake mechanism to prevent dropping.
2. The magnetic brakes are used for holding, and must not be used for normal braking. There may be cases when holding is not possible due to the life and machine structure (when ball screw and servomotor axis are connected via a timing belt, etc.). Provide a stopping device to ensure safety on the machine side.
3. The magnetic brakes of the motor with magnetic brakes are controlled in the intelligent servomotor. However, provide a double circuit configuration so that these brakes will operate even with the external emergency stop signal.

6-4-1 Connection example

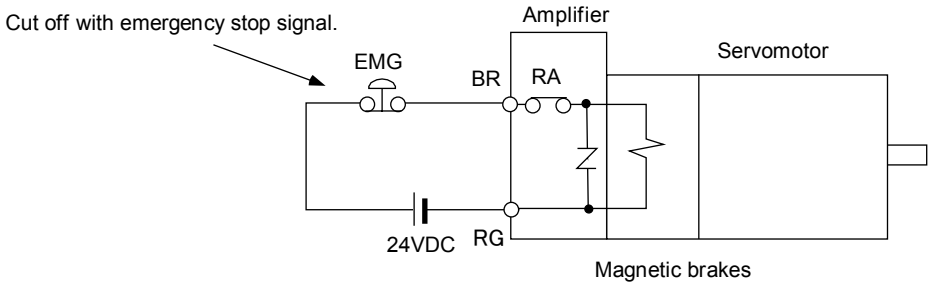

1) The brakes are safety brakes, and will operate when the power (24VDC) is turned OFF.
2) Prepare a brake excitation power supply that ensures a secure attraction current.
3) The brake terminal polarity is random, but must not be mistaken with other circuits.

6-4-2 Manually releasing the magnetic brakes

The intelligent servomotor has a relay for controlling the brakes in the amplifier, so the brakes cannot be released even if power is supplied to the 24V power terminal (BR, RG) for the cannon plug brakes. Release the brakes with the following method when the brakes need to be released for handling when assembling, adjusting or servicing the machine.

(1) Method 1

Remove the amplifier section and input the 24V power to the motor brakes. There is no polarity. Refer to section "9-3. Replacing the unit" for details on removing and installing the amplifier section.
The amplifier terminal is a connector, so prepare the following connector beforehand.

Plug housing : SMP-02V-BC
Socket contact : BHF-001T-0.8BS (J.S.T. Mfg Co., Ltd.)

(2) Method 2

Enter the brake release mode by changing the MON signal, normally used for the axis No. selection, several times.

1) Prepare the circuit operation box shown with the dotted line below, and connect with the intelligent servomotor as shown in the drawing.
2) Open SW1 and SW2.
3) Input 200VAC to the LL1 and LL2 terminals. → The LED will turn ON.
4) Turn SW1 ON. → The LED will flicker.
5) Turn SW2 ON. → The LED will turn OFF.
6) Turn SW2 OFF. → The LED will turn ON, and the relay in the amplifier will turn ON.
7) Input 24VDC to the BR and RG terminals. → The brakes will be released.
8) Thereafter, when SW2 is turned ON the brakes will be applied, and when turned OFF, the brakes will be released.

上正科技有限公司
購買、維修 此手冊零組件
電話： 037-466333
Email: service@repairtw.com
Line id: @zzzz
www.repairtw.com

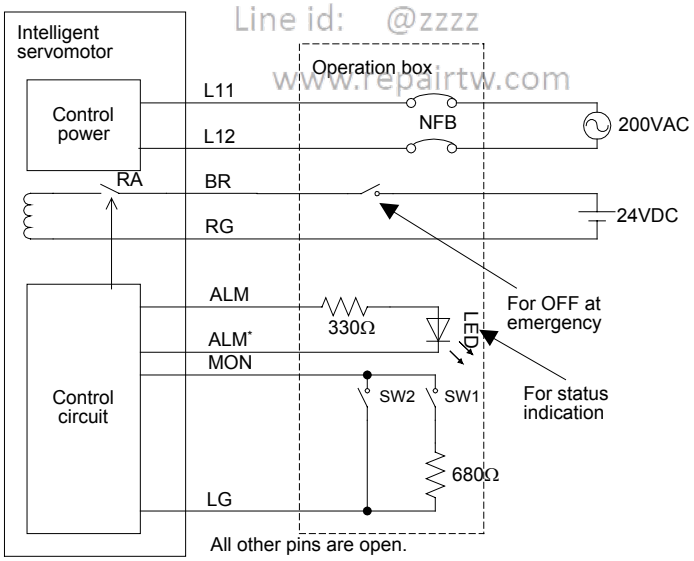

6-5 Connection with the NC

6-5-1 Connection system

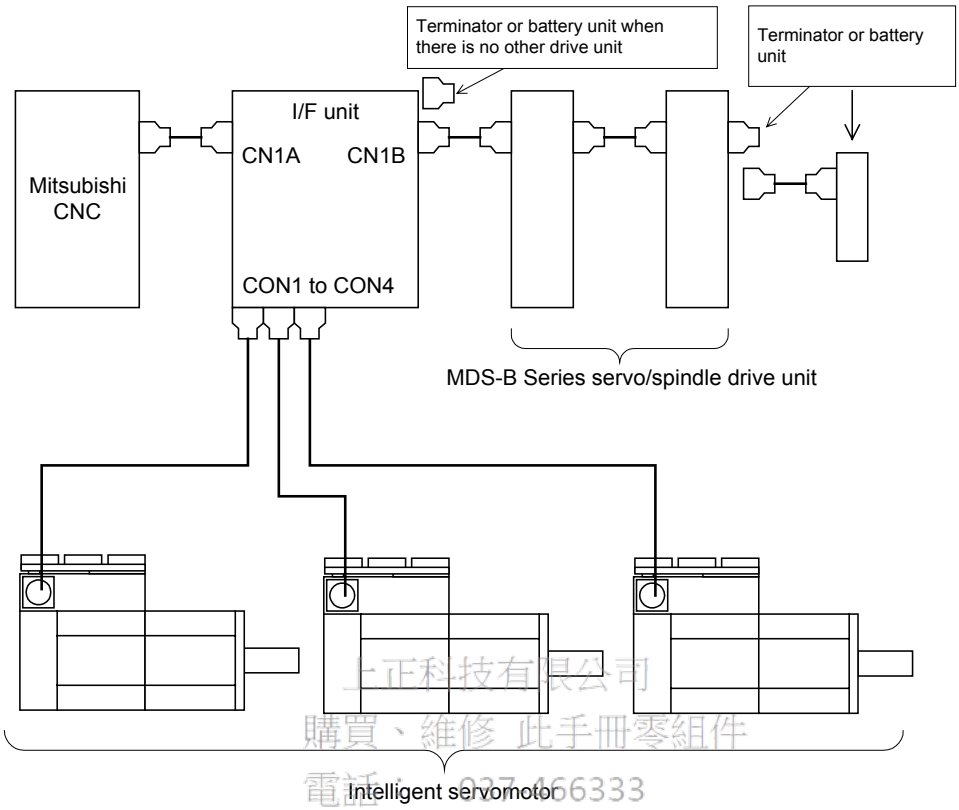

上正科技有限公司
購買、維修 此手冊零組件
電話： 037-466333
Email: service@repair.tw.com
Line id: @zzzz
www.repair.tw.com

(1) Refer to "Chapter 6 Peripheral devices" for details on connecting and setting the I/F unit.
(2) The I/F unit's CON1 to CON4 (intelligent servo connection connectors) can be connected to any connector.
(3) If the MDS-B Series servo/spindle drive unit is connected as shown above, connect the I/F unit between the CNC and servo spindle drive. Other drive units cannot be connected between the CNC and I/F unit.

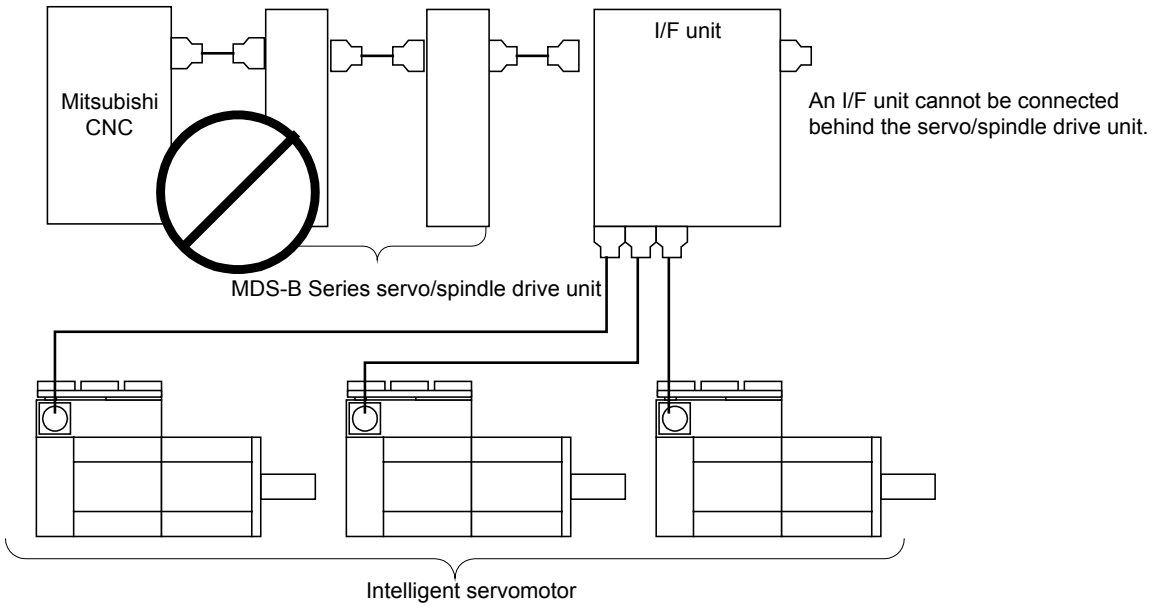

(4) There may be cases when the I/F unit (PCB) is manufactured by the machine maker. In this case, contact the machine maker for details on connecting and setting the I/F unit.

Chapter 7 Setup

7-1 Setting the initial parameters 7-2
7-1-1 Servo specification parameters 7-2
7-1-2 Limitations to electronic gear setting value 7-2
7-1-3 Parameters set according to feedrate 7-3
7-1-4 Parameters set according to machine load inertia 7-3
7-1-5 Standard parameter list according to motor 7-4

上正科技有限公司
購買、維修 此手冊零組件
電話： 037-466333
Email: service@repairtw.com
Line id: @zzzz
www.repairtw.com

7-1 Setting the initial parameters

The servo parameters must be set to start up the servo drive system.
The servo parameters are input from the CNC. The input method will differ according to the CNC, so refer to the Instruction Manual provided with each CNC.

7-1-1 Servo specification parameters

The servo specification parameters are determined according to the machine specifications and servo system specifications.

<table>
<tr><th>No.</th><th>Abbrev.</th><th>Parameter name</th><th>Explanation</th></tr>
<tr><td>SV017</td><td>SPEC</td><td>Servo specifications</td><td>This is a HEX setting parameter. Set this as follows according to the servo specifications.
<table>
<tr><td>15</td><td>14</td><td>13</td><td>12</td><td>11</td><td>10</td><td>9</td><td>8</td><td>7</td><td>6</td><td>5</td><td>4</td><td>3</td><td>2</td><td>1</td><td>0</td></tr>
<tr><td></td><td></td><td></td><td></td><td></td><td></td><td></td><td></td><td>abs</td><td></td><td></td><td></td><td></td><td></td><td></td><td>dmk</td></tr>
</table>
<table>
<tr><th colspan="2">bit</th><th>Meaning when "0" is set.</th><th>Meaning when "1" is set.</th></tr>
<tr><td>0</td><td>dmk</td><td>Deceleration control stop (Standard)</td><td>Dynamic brake stop selection</td></tr>
<tr><td>7</td><td>abs</td><td>Incremental control</td><td>Absolute position control</td></tr>
</table>
Set all bits other than those above to 0.</td></tr>
<tr><td>SV025</td><td>MTYP</td><td>Motor type</td><td>Set the motor type.
Refer to the standard parameter list for each motor for the settings.</td></tr>
<tr><td>SV036</td><td>PTYP</td><td>Regenerative resistor type</td><td>Set 1000 as a standard.</td></tr>
<tr><td>SV027</td><td>SSF1</td><td>Special servo function selection 1</td><td>Set 4000 as a standard.</td></tr>
<tr><td>SV033</td><td>SSF2</td><td>Special servo function selection 2</td><td>Set 0000 as a standard.</td></tr>
<tr><td>SV001</td><td>PC1</td><td>Motor side gear ratio</td><td rowspan="2">Set the motor side gear ratio in PC1 and the machine side gear ratio in PC2.
When using a rotary axis, set the total deceleration (acceleration) ratio.</td></tr>
<tr><td>SV002</td><td>PC2</td><td>Machine side gear ratio</td></tr>
<tr><td>SV018</td><td>PIT</td><td>Ball screw pitch</td><td>Set the ball screw pitch with an mm unit. Set 360 for a rotary axis.</td></tr>
<tr><td>SV019</td><td>RNG1</td><td>Position detector resolution</td><td rowspan="2">Set the motor detector resolution with a kp/rev unit for both settings.
Refer to the standard parameters for each motor for the settings.</td></tr>
<tr><td>SV020</td><td>RNG2</td><td>Speed detector resolution</td></tr>
<tr><td>SV003</td><td>PGN1</td><td>Position loop gain</td><td>Set 33 as a standard.</td></tr>
</table>

上正科技有限公司
購買、維修 此手冊零組件
電話：037-466233
Email: service@repairtw.com
Line id: @2222
www.repairtw.com

7-1-2 Limitations to electronic gear setting value

The servo amplifier has internal electronic gears. The command value from the NC is converted into a detector resolution unit to carry out position control. The electronic gears are single gear ratios calculated from multiple parameters as shown below. However, each value (ELG1, ELG2) must be less than 32767.
If the value overflows, the initial parameter error (alarm 37) or error parameter No. 101 (2301 with M50/M64 Series NC) will be output.
If an alarm occurs, the mechanical specifications and electrical specifications must be revised so that the electronic gears are within the specifications range.

Reduced fraction of

$$\frac{ELG1}{ELG2} = \frac{PC2 \times RANG}{PC1 \times PIT \times IUNIT} \quad \text{(reduced fraction)}$$

RANG = RNG1 = RNG2
IUNIT = 2/NC command unit (μm)
1μm : IUNIT = 2, 0.1μm: IUNIT = 20

When the above is calculated, the following conditions must be satisfied.

$ELG1 \leq 32767$

$ELG2 \leq 32767$

POINT If the electronic gears in the amplifier overflow, the alarm 37 or error parameter No. 101 (2301 with M50/M64 series NC) will be output.

7-1-3 Parameters set according to feedrate

The following parameters are determined according to each axis' feedrate.

No.	Abbrev.	Parameter name	Explanation
SV023	OD1	Excessive error detection width at servo ON	A protective function will activate if the error between the position command and position feedback is excessive. If the machine load is heavy and problems occur with the standard settings, gradually increase the setting value. **<Calculation of standard setting value>** $OD1 = OD2 = \frac{\text{Rapid traverse rate (mm/min)}}{60 \times PGN1} \div 2$ (mm)
SV026	OD2	Excessive error detection width at servo OFF	

7-1-4 Parameters set according to machine load inertia

The following parameters are set according to the machine's inertia.

No.	Abbrev.	Parameter name	Explanation
SV005	VGN1	Speed loop gain.	Refer to the comparison graph with the load inertia scale for the standard setting value.
SV008	VIA	Speed loop leading compensation	Set 1364 as a standard. Set 1900 as a standard for the SHG control. If the load inertia is large and is in the standard VIA change region, set the value in the comparison graph regardless of whether normal control or SHG control is used.

上正科技有限公司
購買、維修 此手冊零組件
電話： 037-466333
Email: service@repairtw.com
Line id: @zzzz
www.repairtw.com

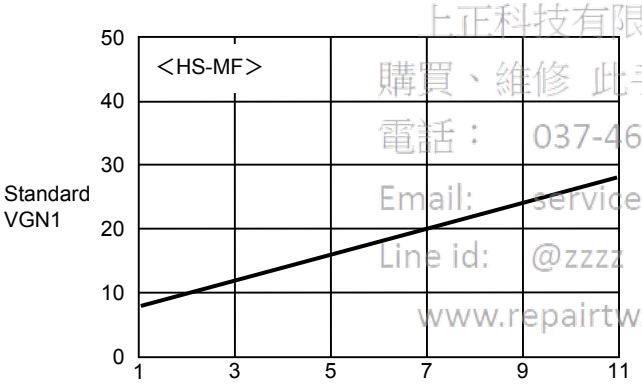

Load inertia scale (total load inertia/motor inertia)

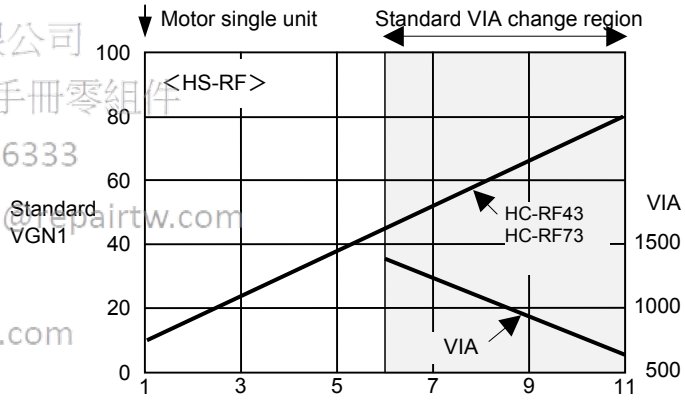

Load inertia scale (total load inertia/motor inertia)

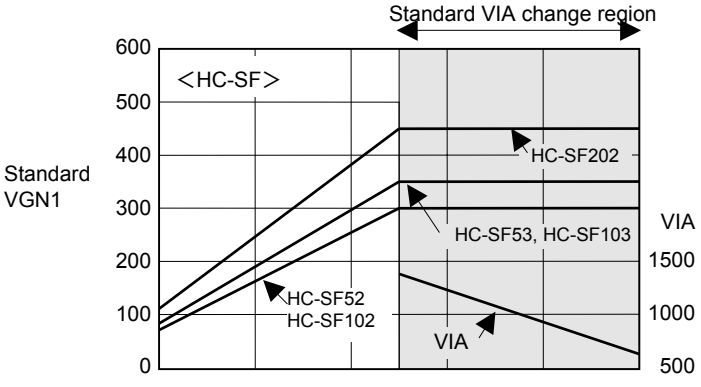

Load inertia scale (total load inertia/motor inertia)

7-1-5 Standard parameter list according to motor

Set the parameters other than 7-2-1 to 7-2-4 to the standard parameters.

Motor type			MF23	RF43	RF73	SF52	SF53	SF102	SF103	SF202
No.	Abbrev.	Parameter name								
SV001	PC1	Motor side gear ratio	Set the motor side gear ratio in PC1 and the machine side gear ratio in PC2. When using a rotary axis, set the total deceleration (acceleration) ratio.							
SV002	PC2	Machine side gear ratio								
SV003	PGN1	Position loop gain 1	33							
SV004	PGN2	Position loop gain 2	0							
SV005	VGN1	Speed loop gain	Refer to "7-1-4 Parameters set according to machine load inertia"							
SV006	–	–	0							
SV007	–	–	0							
SV008	VIA	Speed loop leading compensation	1364							
SV009	IQA	Current loop Q axis leading compensation	4096	8192	8192	8192	4096	8192	4096	4096
SV010	IDA	Current loop D axis leading compensation	4096	8192	8192	8192	4096	8192	4096	4096
SV011	IQG	Current loop Q axis gain	400	384	384	512	256	384	256	384
SV012	IDG	Current loop D axis gain	400	384	384	512	256	384	256	384
SV013	ILMT	Current limit value	400	300	300	700	700	600	700	500
SV014	ILMTsp	Current limit value during special operation	400	250	250	700	700	600	700	500
SV015	FFC	Acceleration feed forward gain	0							
SV016	LMC1	Lost motion compensation 1	0							
SV017	SPEC	Servo specifications	Refer to "7-1-1 Servo specification parameters"							
SV018	PIT	Ball screw pitch	Set the ball screw pitch with an mm unit. Set 360 for a rotary axis.							
SV019	RNG1	Position detector resolution	8	100						
SV020	RNG2	Speed detector resolution	8	100						
SV021	OLT	Overload time constant	60							
SV022	OLL	Overload detection level	150							
SV023	OD1	Excessive error detection width during servo ON	Refer to "7-1-3 Parameters set according to feedrate"							
SV024	INP	In-position width	50							
SV025	MTYP	Motor type	229E	22E0	22E1	22B0	22C0	22B1	22C1	22B3
SV026	OD2	Excessive error detection width during servo OFF	Refer to "7-1-3 Parameters set according to feedrate"							
SV027	SSF1	Special servo function selection 1	4000							
SV028 to 035	–	Compensation function for special functions	0							
SV036	PTYP	Regenerative resistor type	1000							
SV037 to 046	–	Compensation function for special functions	0							
SV047	EC	Inductive voltage compensation gain	70							
SV048	EMGrt	Vertical axis drop prevention time	0							
SV049	PGN1sp	Position loop gain during spindle synchronization 1	15							
SV050 to 064	–	Compensation function for special functions	0							

上正科技有限公司
購買、維修 此手冊零組件
電話： 037-466333
Email: service@repairtw.com
Line id: @zzzz
www.repairtw.com

Chapter 8 Adjustment

8-1 Measurement of adjustment data 8-2
8-1-1 D/A output specifications 8-2
8-1-2 Setting the output data 8-2
8-1-3 Setting the output scale 8-3
8-1-4 Setting the offset amount 8-3
8-1-5 Clamp function 8-3
8-1-6 Filter function 8-3
8-2 Gain adjustment 8-4
8-2-1 Current loop gain 8-4
8-2-2 Speed loop gain 8-4
8-2-3 Position loop gain 8-6
8-3 Characteristics improvement 8-8
8-3-1 Optimal adjustment of cycle time 8-8
8-3-2 Vibration suppression measures 8-10
8-3-3 Improving the cutting surface precision 8-12
8-3-4 Improvement of protrusion at quadrant changeover 8-15
8-3-5 Improvement of overshooting 8-19
8-3-6 Improvement of characteristics during acceleration/deceleration 8-21
8-4 Setting for emergency stop 8-24
8-4-1 Deceleration control 8-24
8-4-2 Vertical axis drop prevention control 8-26
8-5 Collision detection 8-27
8-6 Parameter list 8-30

上正科技有限公司
購買、維修 此手冊零組件
電話： 037-466333
Email: service@repairtw.com
Line id: @zzzz
www.repairtw.com

8-1 Measurement of adjustment data

The intelligent servomotor has a function to D/A output the various control data. To adjust the servo and set the servo parameters that match the machine, it is necessary to use the D/A output and measure the internal status of the servo. Measure using a hi-coder, synchroscope, etc.

8-1-1 D/A output specifications

<Output specifications>

No. of channels : 1ch.
Output cycle : 888μsec (min. value)
Output precision : 8bit
Output voltage range : 0V to 2.5V to 5V
Output pins : On intelligent servo I/F unit
Output scale setting : ±1/256 to ±128 times
Output resistance : 1kΩ

<Output function>

- Offset amount adjustment function
- Output clamp function
- Low path filter function

<Measurement method>

Connect the measuring instrument to the I/F unit check pin. When observing the waveform, turn the I/F unit DIP switch OFF.
Note that the DIP switch must be turned ON when the power is turned ON. Do not connect a measuring instrument having a low input impedance when turning the power ON.

上正科技有限公司
購買、維修 此手冊零組件
電話： 037-466333
Email: service@repairtw.com
Line id: @zzzz
www.repairtw.com

8-1-2 Setting the output data

No.	Abbrev.	Parameter name	Explanation
SV061	DA1NO	D/A output channel 1 data No.	Input the No. of the data to be output to each D/A output channel.

No.	Output data	Standard output unit	Output cycle
0	0 V test output	For offset amount adjustment	
1	Speed feedback	2000rpm/1V	888 μsec
2	Current feedback	Rated current/0.5V	888 μsec
3	Speed command	2000rpm/1V	888 μsec
4	Current command	Rated current/0.5V	888 μsec
5	V-phase current value	40A/V	888 μsec
6	W-phase current value	40A/V	888 μsec
7	Estimated disturbance torque	Rated current/0.5V	888 μsec
8	–		
9	–		
10	–		
11	Position droop	4 mm/V	3.55 msec
12	Position droop(×10)	400 μm/V	3.55 msec
13	Position droop(×100)	40 μm/V	3.55 msec
14	Feedrate (FΔT)	40000 (mm/min)/V	888 μsec
15	Feedrate (FΔT×10)	4000 (mm/min)/V	888 μsec
16	–		3.55 msec
17	–		3.55 msec
18	–		3.55 msec
19	q axis current cumulative value	–	888 μsec
20	d axis current cumulative value	–	888 μsec

No.	Output data	Standard output unit	Output cycle
21	Motor load level	100%/1.25V	113.7 msec
22	Amplifier load level	100%/1.25V	113.7 msec
23	Regenerative load level	100%/1.25V	910.2 msec
24	PN bus wire voltage	200V/V (1/200)	888 μsec
25	Speed cumulative item	–	888 μsec
26	Cycle counter	0–125V	888 μsec
27	–		3.55 msec
28	–		
29	–		3.55 msec
30	–		3.55 msec
31 to 99	–		
100	5 V test output	–	–
101	Saw-tooth wave test output	1.25 to 3.75V Cycle 113.7 msec	888 μsec
102	Rectangular wave test output	2.5 to 3.75V Cycle 227.5 msec	888 μsec
103 ≀	Setting prohibited		

8-1-3 Setting the output scale

This is set when an output is to made with a unit other than the standard output unit.

(Example 1) When SV061= 5, SV063 = 2560
The V-phase current value will be output with 4A/V unit to D/A output ch. 1.
(Example 2) When SV063 = 11, SV064 = 128
The position droop will be output with a 8mm/V unit to the D/A output ch. 2.

No.	Abbrev.	Parameter name	Explanation	Setting range
SV063	DA1MPY	D/A output channel 1 output scale	When "0" is set, the output will be made with the standard output unit. To change the output unit, set a value other than 0. The scale is set with a 1/256 unit. When 256 is set, the unit will be the same as the standard output unit.	–32768 to 32767
SV064	DA2MPY	D/A output channel 2 output scale		

8-1-4 Setting the offset amount

This is used when the zero level of the output voltage is to be finely adjusted. The output scale when the data No. is 0 will be the offset amount. After setting the offset, set the data No. to a value other than 0, and do not set it to 0 again. The offset value will be reset when the amplifier power is turned OFF. (The value is not reset when the NC power is turned OFF.)

No.	Abbrev.	Parameter name	Explanation	Setting range
SV061	DA1NO	D/A output channel 1 data No.	Set "0".	0 to 102
SV063	DA1MPY	D/A output channel 1 offset amount	The amount can be set with the output precision unit. Observe the output value and set so that the output value is 0 V.	–10 to 10

上正科技有限公司
購買、維修 此手冊零組件
電話： 037-466333
Email: service@repairtw.com
Line ID: @zzzz
www.repairtw.com

8-1-5 Clamp function

This is used when the output value such as the position droop exceeds the output range and over flows.

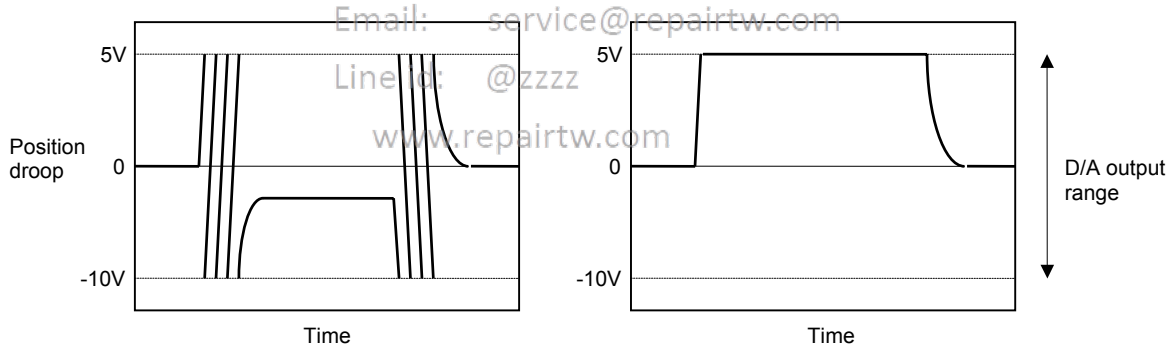

8-1-6 Filter function

A low path filter with a cutoff frequency of 140 Hz can be set.

No.	Abbrev.	Parameter name	Explanation
SV034	SSF3	Special servo function selection 3	Set the clamp function and filter function with the following parameter.

15	14	13	12	11	10	9	8	7	6	5	4	3	2	1	0
								daf2	daf1	dac2	dac1				mon

bit		Meaning when "0" is set.	Meaning when "1" is set.
4	dac1	ch. 1 Overflow setting	ch. 1 Clamp setting
5	dac2	ch. 2 Overflow setting	ch. 2 Clamp setting
6	daf1	ch. 1 No filter	ch. 1 Filter operation
7	daf2	ch. 2 No filter	ch. 2 Filter operation

8-2 Gain adjustment

8-2-1 Current loop gain

No.	Abbrev.	Parameter name	Explanation	Setting range
SV009	IQA	q axis leading compensation	This setting is determined by the motor's electrical characteristics. Set the standard parameters for all parameters. (These are used for maker adjustments.)	1 to 20480
SV010	IDA	d axis leading compensation		1 to 20480
SV011	IQG	q axis gain		1 to 2560
SV012	IDG	d axis gain		1 to 2560

8-2-2 Speed loop gain

(1) Setting the speed loop gain

The speed loop gain (SV005: VGN1) is an important parameter for determining the responsiveness of the servo control. During servo adjustment, the highest extent that this value can be set to becomes important. The setting value has a large influence on the machine cutting precision and cycle time.
To adjust the VGN1 value, first obtain the standard VGN1 to judge how much VGN1 is required for the machine load inertia.
The standard VGN1 is the value that corresponds to the size of the machine load inertia shown in the graph in section 7-1-3. If the load inertia is not clear, estimate it using the following procedure.

1) Set the VGN1 of a level where acceleration/deceleration operation is possible. (Set a slightly lower value so resonance does not occur.)
2) Set SV037 = 100, SV043 = 600, and SV044 = 0 in the servo parameters. Carry out a return operation within the range where the axis can operate smoothly. At this time, set the acceleration/deceleration time constant so the acceleration/deceleration torque equals or exceeds (is 100% or higher than) the stall (rated) torque.
3) Observe the estimated disturbance using the D/A output, and increase the SV037 value until the disturbance torque during acceleration/deceleration becomes smaller (cannot be observed). (The unbalance torque is observed as an estimated disturbance torque in the vertical and slanted axes, so ignore this amount or set the torque offset (SV032) and adjust. The friction torque is also observed in the same way for axes having a large amount of friction, but this should be ignored. Refer to section "8-3-3 (4) Disturbance observer" for details.)
4) The SV037 setting where the disturbance torque becomes the smallest during the estimated acceleration/deceleration is the machine's total load inertia magnification including the motor inertia. Obtain the standard VGN1 from the graph in section 7-1-3 based on this value.

昌佳科技有限公司
購買、維修、技術諮詢
電話：037-466333
Email: service@repairtw.com
Line ID: @2227
www.repairtw.com

<When machine resonance does not occur at the standard VGN1>

Set the standard VGN1. Use the standard value if no problem (such as machine resonance) occurs. If sufficient cutting precision cannot be obtained at the standard VGN1, do not raise the VGN1 further above the standard value. Instead, use the disturbance observer and adjust. Basically, there is no need to set a value higher than the standard value in VGN1.

<When machine resonance occurs at the standard VGN1>

Machine resonance is occurring if the shaft makes abnormal sounds when operating or stopping, and a fine vibration can be felt when the machine is touched while stopped. Machine resonance occurs because the servo control responsiveness includes the machine resonance points. (Speed control resonance points occur, for example, at parts close to the motor such as ball screws.) Machine resonance can be suppressed by lowering VGN1 and the servo control responsiveness, but the cutting precision and cycle time are sacrificed. Thus, set a vibration suppression filter and suppress the machine resonance (Refer to section "8-3-2 Vibration suppression measures"), and set a value as close as possible to the standard VGN1. If the machine resonance cannot be sufficiently eliminated even by using a vibration suppression filter, then lower the VGN1.

No.	Abbrev.	Parameter name	Explanation	Setting range
SV005	VGN1	Speed loop gain	Set this according to the motor inertia size. If vibration occurs, adjust by lower the setting by 20% to 30% at a time.	1 to 999

POINT

The final VGN1 setting value should be 70 to 80% of the largest value at which machine resonance does not occur.
If the vibration suppression functions are used to suppress the resonance and the VGN1 setting value is raised, the subsequent servo adjustment becomes more favorable.

(2) Setting the speed loop leading compensation

The speed loop leading compensation (SV008: VIA) determines the characteristics of the speed loop mainly at low frequency regions. 1364 is set as a standard, and 1900 is set as a standard during SHG control. The standard value may drop as shown in the graph in section 7-1-3 in respect to loads with a large inertia.

When the VGN1 is set lower than the standard value because the load inertia is large or because machine resonance occurred, the speed loop control band is lowered. If the standard value is set in the leading compensation in this status, the leading compensation control itself will induce vibration. In concrete terms, a vibration of 10 to 20Hz could be caused during acceleration/deceleration and stopping, and the position droop waveform could be disturbed when accelerating to a constant speed and when stopped. (Refer to the following graphs.)

This vibration cannot be suppressed by the vibration suppression functions. Lower the VIA in increments of 100 from the standard setting value. Set a value where vibration does not occur and the position droop waveform converges smoothly. Because lowering the VIA causes a drop in the position control's trackability, the vibration suppression is improved even when a disturbance observer is used without lowering the VIA. (Be careful of machine resonance occurrence at this time.)

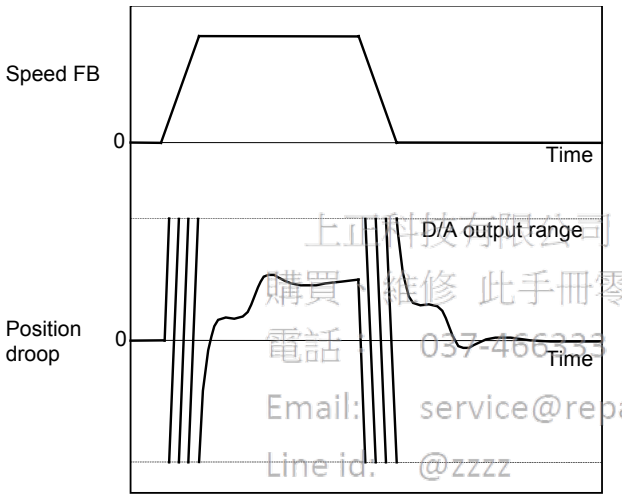

Vibration waveform with leading compensation control

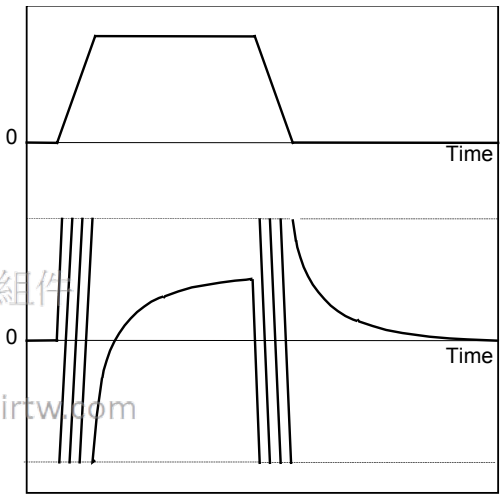

Adjusted position droop waveform

上正科技有限公司
購買、維修 此手冊零組件
電話： 037-466333
Email: service@repairtw.com
Line id: @zzzz
www.repairtw.com

If VIA is lowered, the position droop waveform becomes smooth and overshooting does not occur. However, because the trackability regarding the position commands becomes worse, that amount of positioning time and precision are sacrificed. VIA must be kept high (set the standard value) to guarantee precision, especially in high-speed contour cutting (generally F = 1000 or higher). In other words, a large enough value must be set in VGN1 so that the VIA does not need to be lowered in machines aimed at high-speed precision. When adjusting, the cutting precision will be better if adjustment is carried out to a degree where overshooting does not occur and a high VIA is maintained, without pursuing position droop smoothness.

If there are no vibration or overshooting problems, the high-speed contour cutting precision can be further improved by setting the VIA higher than the standard value. In this case, adjust by raising the VIA in increments of 100 from the standard value.

Setting a higher VIA improves the trackability regarding position commands in machines for which cycle time is important, and the time to when the position droop converges on the in-position width is shortened.

It is easier to adjust the VIA to improve precision and cycle time if a large value (a value near the standard value) can be set in VGN1, or if VGN1 can be raised equivalently using the disturbance observer.

No.	Abbrev.	Parameter name	Explanation	Setting range
SV008	VIA	Speed loop leading compensation	1364 is set as a standard. 1900 is set as a standard during SHG control. Adjust in increments of approx. 100. Raise the VIA and adjust to improve the contour tracking precision in high-speed cutting. If the position droop vibrates (10 to 20Hz), lower the VIA and adjust.	1 to 9999

POINT Position droop vibration of 10Hz or less is not leading compensation control vibration. The position loop gain must be adjusted.

8-2-3 Position loop gain

(1) Setting the position loop gain

The position loop gain (SV003:PGN1) is a parameter that determines the trackability to the command position. 33 is set as a standard. Set the same position loop gain value between interpolation axes.
When PGN1 is raised, the settling time will be shortened, but a speed loop that has a responsiveness that can track the position loop gain with increased response will be required. If the speed loop responsiveness is insufficient, several Hz of vibration or overshooting will occur during acceleration/deceleration. Vibration or overshooting will also occur when VGN1 is smaller than the standard value during VIA adjustment, but the vibration that occurs in the position loop is generally 10Hz or less. (The VIA vibration that occurs is 10 to 20Hz.) When the position control includes machine resonance points (Position control machine resonance points occur at the machine end parts, etc.) because of insufficient machine rigidity, the machine will vibrate during positioning, etc. In either case, lower PGN1 and adjust so vibration does not occur.
If the machine also vibrates due to machine backlash when the motor stops, the vibration can be suppressed by lowering the PGN1 and smoothly stopping.
If SHG control is used, an equivalently high position loop gain can be maintained while suppressing these vibrations. To adjust the SHG control, gradually raise the gain from a setting where 1/2 of a normal control PGN1 where vibration did not occur was set in PGN1. If the PGN1 setting value is more than 1/2 of the normal control PGN1 when SHG control is used, there is an improvement effect in position control. (Note that for the settling time the improvement effect is at $1/\sqrt{2}$ or more.)

No.	Abbrev.	Parameter name	Explanation	Setting range
SV003	PGN1	Position loop gain 1	Set 33 as a standard. If PGN1 is increased, the settling time will be shortened, but a sufficient speed loop response will be required.	1 to 200
SV004	PGN2	Position loop gain 2	Set 0. (For SHG control)	0 to 999
SV057	SHGC	SHG control gain	Set 0. (For SHG control)	0 to 999

上市科技有限公司
購買、維修 此手冊零組件
電話： 037-466333
Email: service@repairtw.com
Line id: @zzzz
www.repairtw.com

⚠ CAUTION Always set the same value3 for position loop gain between interpolation axes.

(2) Setting the position loop gain for spindle synchronous control

During spindle synchronous control (synchronous tapping control, etc.), there are three sets of position loop gain parameters besides the normal control.

No.	Abbrev.	Parameter name	Explanation		Setting range
SV049	PGN1sp	Position loop gain 1 during spindle synchronization	Set 15 as a standard.	Set the same parameter as the position loop gain for the spindle synchronous control.	1 to 200
SV050	PGN2sp	Position loop gain 2 during spindle synchronization	Set 0 as a standard. (For SHG control)		0 to 999
SV058	SHGCsp	SHG control gain during spindle synchronization	Set 0 as a standard. (For SHG control)		0 to 999

⚠ CAUTION Always set the same value for the position loop gain between the spindle and servo synchronous axes.

(3) SHG control (option function)

If the position loop gain is increased or feed forward control (CNC function) is used to shorten the settling time or increase the precision, the machine system may vibrate easily.
SHG control changes the position loop to a high-gain by stably compensating the servo system position loop through a delay. This allows the settling time to be reduced and a high precision to be achieved.

(Feature 1) When the SHG control is set, even if PGN1 is set to the same value as the conventional gain, the position loop gain will be doubled.

(Feature 2) The SHG control response is smoother than conventional position control during acceleration/deceleration, so the gain can be increased further with SHG control compared to the conventional position control.

(Feature 3) With SHG control, a high gain is achieved so a high precision can be obtained during contour control.
The following drawing shows an example of the improvement in roundness characteristics with SHG control.

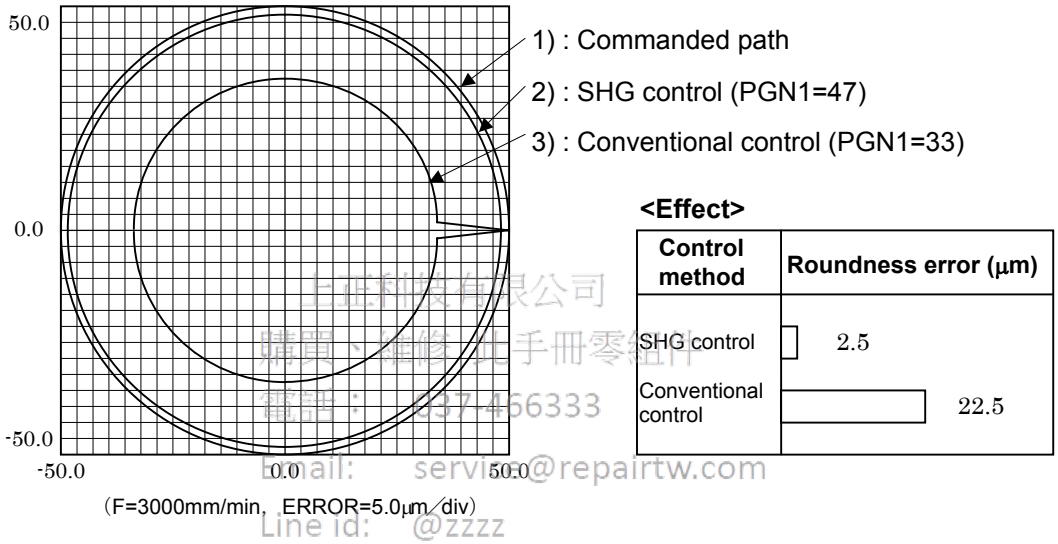

<Effect>

Control method	Roundness error (μm)
SHG control	2.5
Conventional control	22.5

上正科技有限公司
購買、維修 此手冊零組件
電話： 037-466333
Email: service@repairtw.com
Line id: @zzzz
www.repairtw.com

Shape error characteristics

During SHG control, PGN1, PGN2 and SHGC are set with the following ratio.

$$PGN1 : PGN2 : SHGC = 1 : \frac{8}{3} : 6$$

During SHG control even if the PGN1 setting value is the same, the actual position loop gain will be higher, so the speed loop must have a sufficient response. If the speed loop response is low, vibration or overshooting could occur during acceleration/deceleration in the same manner as conventional control. If the speed loop gain has been lowered because machine resonance occurs, lower the position loop gain and adjust.

No.	Abbrev.	Parameter name	Setting ratio	Setting example					Explanation	Setting range
SV003 (SV049)	PGN1 (PGN1sp)	Position loop gain 1	1	23	26	33	38	47	Always set a combination of the three parameters.	1 to 200
SV004 (SV050)	PGN2 (PGN2sp)	Position loop gain 2	8/3	62	70	86	102	125		0 to 999
SV057 (SV058)	SHGC (SHGCsp)	SHG control gain	6	140	160	187	225	281		0 to 999
SV008	VIA	Speed loop leading compensation	Set 1900 as a standard for SHG control.							1 to 9999
SV015	FFC	Acceleration feed forward gain	Set 100 as a standard for SHG control.							0 to 999

⚠ CAUTION The SHG control is an optional function. If the option is not set in the CNC, the alarm 37 or warning E4, Error Parameter No. 104 (2304 for M50/M64 Series CNC) will be output.

8-3 Characteristics improvement

8-3-1 Optimal adjustment of cycle time

The following items must be adjusted to adjust the cycle time. Refer to the Instruction Manuals provided with each CNC for the acceleration/deceleration pattern.

1) Rapid traverse rate (rapid) : This will affect the maximum speed during positioning.
2) Clamp speed (clamp) : This will affect the maximum speed during cutting.
3) Acceleration/deceleration time constant (G0t∗, G1t∗) : Set the time to reach the feedrate.
4) In-position width (SV024) : This will affect each block's movement command end time.
5) Position loop gain (SV003) : This will affect each block's movement command settling time.

(1) Adjusting the rapid traverse rate

To adjust the rapid traverse, the CNC axis specification parameter rapid traverse rate (rapid) and acceleration/deceleration time constant (G0t∗) are adjusted. The rapid traverse rate is set so that the motor speed matches the machine specifications in the range below the maximum speed in the motor specifications. For the acceleration/deceleration time constants, carry out rapid traverse reciprocation operation, and set so that the maximum current command value at acceleration/deceleration is within the range shown below. (Only when the rapid traverse rate is below the rated speed.) Set the same value as the adjusted acceleration/deceleration time constant in the servo parameter's deceleration control time constant (SV056: EMGt). (When deceleration control is set.)

For motors in which the maximum speed is greater than the rated speed, the output torque is particularly restricted in the region at or above the rated speed. When adjusting, watch the current FB waveform during acceleration/deceleration, and adjust so that the torque is within the specified range. Be careful, as insufficient torque can easily occur when the amplifier input voltage is low (170 to 190V), and an excessive error can easily occur during acceleration/deceleration.

上正科技有限公司
購買、維修 此手冊零組件
電話： 037-466333
Email: service@repairtw.com
Line id: @zzzz
www.repairtw.com

HS-MF Series		HS-RF Series		HS-SF Series	
Motor type	**Max. current command value**	**Motor type**	**Max. current command value**	**Motor type**	**Max. current command value**
HS-MF23	280 to 320%	HS-RF43	200 to 240%	HS-SF52	420 to 470%
		HS-RF73	200 to 240%	HS-SF53	420 to 470%
				HS-SF102	440 to 500%
				HS-SF103	500 to 560%
				HS-SF202	420 to 470%

(2) Adjusting the cutting rate

To adjust the cutting rate, the CNC axis specification parameter clamp speed (clamp) and acceleration/deceleration time constant (G1t∗) are adjusted. The in-position width at this time must be set to the same value as actual cutting.

• Determining the clamp rate and adjusting the acceleration/deceleration time constant

(Features) The maximum cutting rate (clamp speed) can be determined freely.

(Adjustment) Carry out cutting feed reciprocation operation with no dwell at the maximum cutting rate and adjust the acceleration/deceleration time constant so that the maximum current command value during acceleration/deceleration is within the range shown below.

• Setting the step acceleration/deceleration and adjusting the clamp speed

(Features) The acceleration/deceleration time constant is determined with the position loop in the servo, so the acceleration/deceleration F⊿T can be reduced.

(Adjustment) Set 1 (step) for the acceleration/deceleration time constant and carry out cutting feed reciprocation operation with no dwell. Adjust the cutting feed rate so that the maximum current command value during acceleration/deceleration is within the range shown below, and then set the value in the clamp speed.

<Maximum current command value>

For the maximum current command value during acceleration/deceleration, the maximum current command value (MAXcmd) for one second is output to MAX current 1 and MAX current 2 on the CNC servo monitor screen and observed.

The meaning of the display for MAX current 1 and MAX current 2 will differ according to the parameter settings.

No.	Abbrev.	Parameter name	Explanation
SV034	SSF3	Special servo function selection 3	The display data for the maximum current value on the servo monitor is determined with the following parameter.

15	14	13	12	11	10	9	8	7	6	5	4	3	2	1	0
								daf2	daf1	dac2	dac1				mon

bit		Monitor	Meaning when 0 is set	Meaning when 1 is set
0	mon	MAX current 1	Maximum current command value after power is turned ON	Maximum current command value for one second
		MAX current 2	Maximum current com-mand value for one second	Maximum current FB value for one second

(3) Adjusting the in-position width

Because there is a response delay in the servomotor drive due to position loop control, a "settling time" is also required for the motor to actually stop after the command speed from the CNC reaches 0.

The movement command in the next block is generally started after it is confirmed that the machine has entered the "in-position width" range set for the machine.

The in-position width is effective even when the standard servo parameters are set. However, it may follow the CNC parameters, so refer to the CNC Instruction Manual for the setting.

上正科技有限公司
購買、維修 此手冊零組件
電話： 037-466333
Email: service@repairtw.com
Line id: @zzzz
www.repairtw.com

No.	Abbrev.	Parameter name	Unit	Explanation	Setting range
SV024	INP	In-position detection width	μm	Set 50 as a standard. Set the precision required for the machine.	0 to 32767

POINT The in-position width setting and confirmation availability depend on the CNC parameters

(4) Adjusting the settling time

The settling time is the time required for the position droop to enter the in-position width after the feed command (F⊿T) from the CNC reaches 0.

The settling time can be shortened by raising the position loop gain or using SHG control. However, a sufficient response (sufficiently large VNG1 setting) for the speed loop is required to carry out stable control.

The settling time during normal control when the CNC is set to linear acceleration/ deceleration can be calculated using the following equation. During SHG control, estimate the settling time by multiplying PGN1 by $\sqrt{2}$.

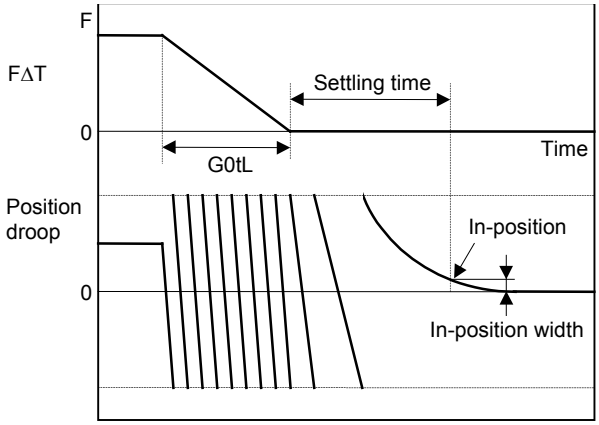

$$\text{Settling time (msec)} = -\frac{10^3}{\text{PGN1}} \times \ell n \left(\frac{\text{INP}}{\dfrac{F \times 10^6}{60 \times \text{G0tL} \times \text{PGN1}^2} \times \left[1 - \exp\left[-\dfrac{\text{PGN1} \times \text{G0tL}}{10^3}\right]\right]} \right)$$

PGN1 : Position loop gain1 (SV003) (rad/sec)
F : Rapid traverse rate (mm/min)
G0tL : Rapid traverse linear acceleration/ deceleration time constant (msec)
INP : In-position width (SV024) (μm)

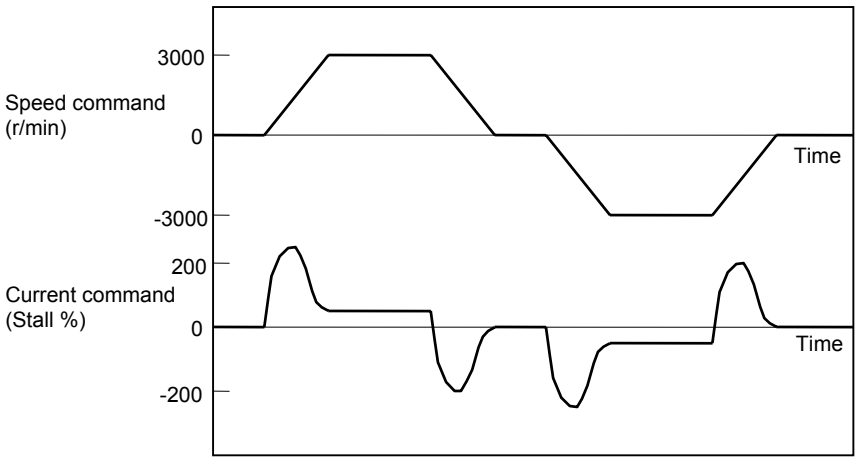

Example of speed/current command waveform during acceleration/deceleration

(Reference) The rapid traverse acceleration/deceleration time setting value G0tL for when linear acceleration/deceleration is set is calculated with the following expression.

$$G0tL = \frac{(J_L + J_M) \times No}{95.5 \times (0.8 \times T_{MAX} - T_L)} - \frac{6000}{(PGN1 \times K)^2} \quad (msec)$$

N_O	: Motor reach speed	(r/min)
J_L	: Motor shaft conversion load inertia	(kg·cm^2)
J_M	: Motor inertia	(kg·cm^2)
T_{MAX}	: Motor max. torque	(N·m)
T_L	: Motor shaft conversion load (friction, unbalance) torque	(N·m)
PGN1	: Position loop gain 1	(rad/sec)
K	: "1" during normal control, "2" during SHG control	

工正科技有限公司
購買、維修 此手冊零組件
電話: 03-3722333
Email: service@repairtw.com
Line id: @zzzz
www.repairtw.com

8-3-2 Vibration suppression measures

If vibration (machine resonance) occurs, it can be suppressed by lowering the speed loop gain (VGN1). However, cutting precision and cycle time will be sacrificed. (Refer to "8-2-2 Speed loop gain".) Thus, try to maintain the VGN1 as high as possible, and suppress the vibration using the vibration suppression functions.
If the VGN1 is lowered and adjusted because vibration cannot be sufficiently suppressed with the vibration suppression functions, adjust the entire gain (including the position loop gain) again.

<Examples of vibration occurrence>

- A fine vibration is felt when the machine is touched, or a groaning sound is heard.
- Vibration or noise occurs during rapid traverse.

No.	Abbrev.	Parameter name	Explanation	Setting range
SV005	VGN1	Speed loop gain	Set according to the load inertia size. If machine resonance occurs, adjust by lowering in increments of 20 to 30%. The setting value is 70 to 80% of the value where resonance does not occur.	1 to 999

POINT

Suppress the vibration using the vibration suppression functions, and maintain the speed loop gain (SV005: VGN1) as high as possible. (The standard value is the upper limit.)

(1) Machine resonance suppression filter (Notch filter)

The resonance elimination filter will function at the set frequency. Use the D/A output function to output the current feedback and measure the resonance frequency. Note that the resonance frequency that can be measured is 0 to 500 Hz.

<Setting method>

1. Set the resonance frequency in the machine resonance suppression filter frequency (SV038: FHz).
2. If the machine starts to vibrate at another frequency, raise (make shallower) the notch filter depth compensation value (SV033: SSF2.nfd), and adjust to the optimum value at which the resonance can be eliminated.
3. When the vibration cannot be completely eliminated, use another vibration suppression control (jitter compensation).

No.	Abbrev.	Parameter name	Explanation	Setting range
SV038	FHz	Notch filter frequency	Set the resonance frequency to be suppressed. (Valid at 72 or more). Set 0 when the filter is not to be used.	0 to 3000
SV033	SSF2	Special servo function selection 2	The notch filter depth compensation is set with the following parameters.	

15	14	13	12	11	10	9	8	7	6	5	4	3	2	1	0
												nfd			

bit		Descriptions
0~3	nfd	Set the filter depth for the notch filter.

	Deeper ←						→ Shallower	
Setting value	0	2	4	6	8	A	C	E
Depth (dB)	∞	−18.1	−12.0	−8.5	−6.0	−4.1	−2.5	−1.2

上正科技有限公司
購買、維修 此手冊零組件
電話： 037-406333
Email: service@repairtw.com
Line id: @zzzz
www.repairtw.com

(2) Jitter compensation

The load inertia becomes extremely small if the motor position enters the machine backlash when the motor is stopped. Because this means that an extremely large VGN1 is set for the load inertia, vibration may occur.
Jitter compensation is the suppression of vibration occurring when the motor stops by ignoring the backlash amount of speed feedback pulses when the speed feedback polarity changes.
Increase the number of ignored pulses by one pulse at a time, and set a value at which the vibration can be suppressed. (Because the position feedback is controlled normally, there is no worry of positional deviation.)
When an axis that does not vibrate is set, vibration could be induced, so take care.

No.	Abbrev.	Parameter name	Explanation
SV027	SSF1	Special servo function selection 1	Set the jitter compensation with the following parameter.

15	14	13	12	11	10	9	8	7	6	5	4	3	2	1	0
aflt	zrn2			ovs2	ovs1	lmc2	lmc1			vfct2	vfct1				

bit		No jitter compensation	One pulse compensation	Two pulse compensation	Three pulse compensation
4	vfct1	0	1	0	1
5	vfct2	0	0	1	1

POINT Jitter compensation vibration suppression is only effective when the motor is stopped.

8-3-3 Improving the cutting surface precision

If the cutting surface precision or roundness is poor, improvements can be made by increasing the speed loop gain (VGN1, VIA) or by using the disturbance observer function.

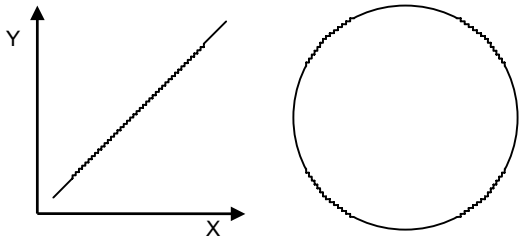

<Examples of faults>

- The surface precision in the 45° direction of a taper or arc is poor.
- The load fluctuation during cutting is large, causing vibration or surface precision defects to occur.

POINT

Adjust by raising the speed loop gain equivalently to improve cutting surface precision, even if the measures differ. In this case, it is important how much the machine resonance can be controlled, so adjust making sufficient use of vibration suppression functions.

(1) Adjusting the speed loop gain (VGN1)

If the speed loop gain is increased, the cutting surface precision will be improved but the machine will resonate easily.
The final VGN1 setting should be approx. 70 to 80% of the maximum value where resonance does not occur. (Refer to "8-2-2 (1) Setting the speed loop gain")

(2) Adjusting the speed loop leading compensation (VIA)

The VIA has a large influence on the position trackability, particularly during high-speed cutting (generally F1000 or more). Raising the setting value improves the position trackability, and the contour precision during cutting can be improved. For high-speed high-precision cutting machines, adjust so that a value equal to or higher than the standard value can be set.
When VIA is set lower than the standard value and set to a value differing between interpolation axes, the roundness may worsen (the circle may distort). This is due to differences occurring in the position trackability between interpolation axes. The distortion can be improved by matching the VIA with the smaller of the values. Note that because the position trackability is not improved, the surface precision will not be improved. (Refer to "8-2-2 (2) Setting the speed loop leading compensation")

工正科技有限公司
www.repairtw.com

No.	Abbrev.	Parameter name	Explanation	Setting range
SV005	VGN1	Speed loop gain	Increase the value by 20 to 30% at a time. If the machine starts resonating, lower the value by 20 to 30% at a time. The setting value should be 70 to 80% of the value where resonance does not occur.	1 to 999
SV008	VIA	Speed loop leading compensation	1364 is set as a standard. 1900 is set as a standard during SHG control. Adjust in increments of approx. 100. Raise the VIA and adjust to improve the contour tracking precision in high-speed cutting. If the position droop vibrates (10 to 20Hz), lower the VIA and adjust.	1 to 9999

(3) Voltage non-sensitive zone (Td) compensation

With the PWM control of the inverter, a dead time (non-energized time) is set to prevent short-circuits caused by simultaneous energizing of the P side and N side transistors having the same phase. The dead time has a non-sensitive zone for particularly low voltage commands. Thus, when feeding with a low speed and a low torque, the control may be unstable. When an unbalanced axis is lowering, the frictional torque and unbalance torque, and the frictional torque and deceleration torque before the quadrant changes during circle cutting, are balanced. The motor output torque will be approximately zero, and the control accuracy may drop. In this case, the control accuracy can be improved by using the voltage non-sensitive band compensation. Note that this may cause vibration to increased while the motor is running.

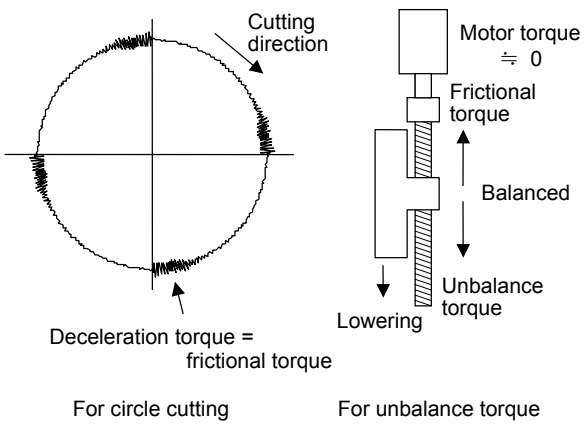

No.	Abbrev.	Parameter name	Explanation	Setting range
SV030	IVC	Voltage non-sensitive band compensation	Set the standard value 20. Note that the vibration could increase during motor operation.	0 to 200

(4) Fine torque compensation

There may be cases when not much torque is generated during low speed feed, or when the wear torque and unbalance torque during lowering an unbalance axis or the wear torque and deceleration torque before a quadrant torque changeover during circular cutting are unbalanced. These can cause the motor output torque to be approximately zero and the control accuracy to drop. In this case, the control accuracy can be improved by using fine torque compensation. Note that this may cause vibration during motor operation to increase.

SV030	TDCG	Voltage non-sensitive band compensation/ fine torque compensation Cx		Set the fine torque compensation amount Cx in the high-order 8 bits. Normally, 0 is set. Set 255 to use this function.	–32768 to 32767
SV040	LMCT	Lost motion compensation non-sensitive band/fine torque compensation Cy	μm /	Set the fine torque compensation Cy in the high-order 8 bits. Normally, 0 is set. Set 255 to use this function.	–32768 to 32767
SV045	TRUB	Collision detection function frictional torque/fine torque compensation B1	Stall % (rated current %) /	To use fine torque compensation, set approx. 10 to 30 in the high-order 8 bits.	–32768 to 32767

上正科技有限公司
購買、維修 此手冊零組件
電話： 037-466333
Email: service@repairtw.com
Line id: @zzzz
www.repairtw.com

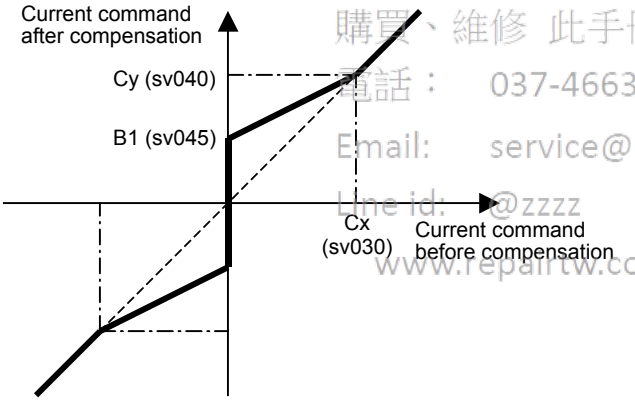

Current (rated %) for Cx, Cy, B1 setting value 256

MF23	22.5%	SF53	24.9%
RF43	13.8%	SF102	26.6%
RF73	20.1%	SF103	30.1%
SF52	24.9%	SF202	24.8%

(4) Disturbance observer

The disturbance observer can reduce the effect caused by disturbance, frictional resistance or torsion vibration during cutting by estimating the disturbance torque and compensating it. It also is effective in suppressing the vibration caused by speed leading compensation control.

<Setting method>

1) Adjust VGN1 to the value where vibration does not occur, and then lower it 10 to 20%.
2) Set the load inertia scale (SV037:JL) with a percentage in respect to the motor inertia of the total load inertia.
3) Set the observer filter band (observer pole) in the disturbance observer 1 (SV043:OBS1), and estimate the high frequency disturbance to suppress the vibration. Set 600 as a standard.
4) Set the observer gain in disturbance observer 2 (SV044:OBS2). The disturbance observer will function here for the first time. Set 100 first, and if vibration does not occur, increase the setting by 50 at a time to increase the observer effect.
5) If vibration occurs, lower OBS1 by 50 at a time. The vibration can be eliminated by lowering OBS2, but the effect of the disturbance observer can be maintained by keeping OBS2 set to a high value.

<Adjustment method>

If the load inertia is not clearly known, estimate it with the following method.

1) With the unbalance axis, set the torque offset (SV032:TOF). (Refer to "8-3-4 (2) Unbalance torque compensation")
2) Set JL = 100, OBS1 = 600, and OBS2 = 0, and carry out a return operation within the range where the axis can operate smoothly. At this time, set the acceleration/deceleration time constant so the acceleration/deceleration torque equals or exceeds (is 100% or higher than) the stall (rated) torque.
3) Observe the estimated disturbance torque using the D/A output, and increase JL until the disturbance torque during acceleration/deceleration becomes small (cannot be observed).
   Even when the torque offset is set and JL is an appropriate value, the friction torque amount remains in the estimated disturbance torque of axes having a large amount of friction. As shown in the graphs below, judge the setting value for JL having only the friction torque remaining as the machine load inertia magnification.

上正科技有限公司
購買、維修、此手冊委託
電話：037-466333
Email: service@repairtw.com
Line Id: @zzzz
www.repairtw.com

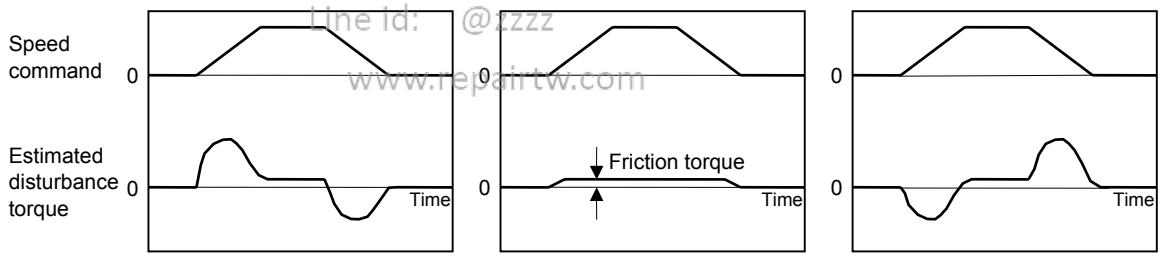

JL : Too low **JL : Optimum** **JL : Too high**

No.	Abbrev.	Parameter name	Unit	Explanation	Setting range
SV037	JL	Load inertia scale	%	Set the load inertia that includes the motor in respect to the motor inertia. (When the motor is a single unit, set 100%) $JL = \frac{Jl + Jm}{Jm}$ Jm : Motor inertia Jl : Machine inertia	0 to 5000
SV043	OBS1	Disturbance observer 1	rad/sec	Set the observer filter band (observer pole). Set 600 as a standard, and lower the setting by 50 at a time if vibration occurs.	0 to 1000
SV044	OBS2	Disturbance observer 2	%	Set the observer gain. Set 100 to 300 as a standard, and lower the setting if vibration occurs.	0 to 1000

POINT

1. When the observer gain is set to zero (OBS2 = 0), the estimated disturbance torque can be output to the D/A output even if the disturbance observer is not functioning.
2. Parts of the machine that do not move smoothly can be presumed to be the disturbance.
3. When the disturbance observer has been started, the lost motion compensation must be readjusted.

8-3-4 Improvement of protrusion at quadrant changeover

The response delay (caused by non-sensitive band from friction, torsion, expansion/contraction, backlash, etc.) caused when the machine advance direction reverses is compensated with the lost motion compensation function.
With this, the protrusions that occur with the quadrant changeover in the DDB measurement method, or the streaks that occur when the quadrant changes during circular cutting can be improved.

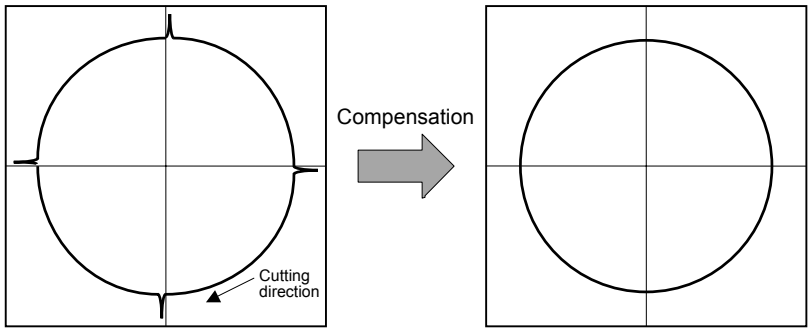

Circle cutting path before compensation **Circle cutting path after compensation**

(1) Lost motion compensation (LMC)

The lost motion compensation compensates the response delay during the reversal by adding the torque command set with the parameters when the speed direction changes. There are two methods for lost motion compensation. With the intelligent servomotor, type 2 is used as a standard. (The explanation for type 1 method is omitted because it is interchangeable with the old method.)

上正科技有限公司
維修 伺服馬達 電路板
電話：02-2248-3656
Email：service@repairtw.com
www.repairtw.com

<Setting method>

1) Set the special servo function selection 1 (SSF1) bit 9 (The LMC type 2 will start).
2) Set the compensation amount with a stall % (rated current % for the general-purpose motor) unit in the lost motion compensation 1 (LMC1). The LMC1 setting value will be used for compensation in the positive and negative directions when LMC2 is 0.
3) If the compensation amount is to be changed in the direction to be compensated, set LMC2. The compensation direction setting will be as shown below with the CW/CCW setting. If only one direction is to be compensated, set the side not to be compensated as –1.

Compensation point	CW	CCW
A	X axis: LMC2	X axis: LMC1
B	Y axis: LMC1	Y axis: LMC2
C	X axis: LMC1	X axis: LMC2
D	Y axis: LMC2	Y axis: LMC1

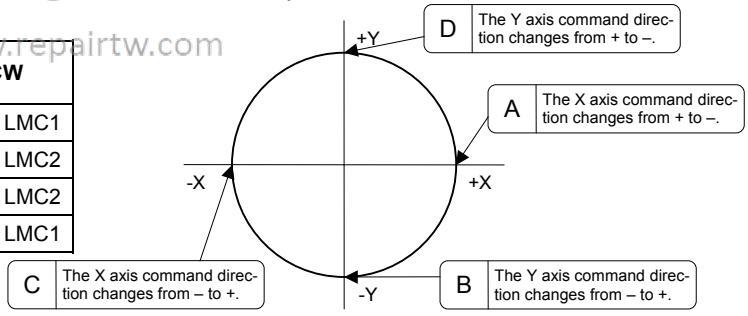

No.	Abbrev.	Parameter name	Explanation
SV027	SSF1	Special servo function selection 1	The lost motion compensation starts with the following parameter.

15	14	13	12	11	10	9	8	7	6	5	4	3	2	1	0
aflt	zrn2			ovs2	ovs1	lmc2	lmc1			vfct2	vfct1				

bit		No LMC	LMC type 1	LMC type 2	Setting prohibited.
8	lmc1	0	1	0	1
9	lmc2	0	0	1	1

No.	Abbrev.	Parameter name	Unit	Explanation	Setting range
SV016	LMC1	Lost motion compensation 1	Stall % (rated current %)	While measuring the quadrant protrusion amount, adjust with a 5% unit. The ± direction setting value will be applied when LMC2 is set to 0.	–1 to 200
SV041	LMC2	Lost motion compensation 2	Stall % (rated current %)	Set 0 as a standard. Set this when the compensation amount is to be changed according to the direction.	–1 to 200

<Adjustment method>

First confirm whether the axis to be compensated is an unbalance axis (vertical axis, slant axis). If it is an unbalance axis, carry out the adjustment after performing step "(2) Unbalance torque compensation".

Next, measure the frictional torque. Carry out reciprocation operation (approx. F1000) with the axis to be compensated and measure the load current % when fed at a constant speed on the CNC servo monitor screen. The frictional torque of the machine at this time is expressed with the following expression.

$$\text{Frictional torque} = \left| \frac{(+\text{ feed load current }\%) - (-\text{ feed load current }\%)}{2} \right|$$

The standard setting value for the lost motion compensation 1 (LMC1) is double the frictional torque above.

(Example)

Assume that the load current % was 25% in the + direction and –15% in the – direction when JOG feed was carried out at approx. F1000. The frictional torque is as shown below, so 20% × 2 = 40% is set for LMC1. (Compensated in both directions with LMC2 set to 0.) With this setting, 40% compensation will be carried out when the command reverses from the + direction to the – direction, and when the command reverses from the – direction to the + direction.

$$\left| \frac{25 - (-15)}{2} \right| = 20\%$$

LMC1 = 20% × 2 = 40%
(Compensated in both directions with LMC2 set to 0.)

上正科技有限公司
購買、維修 此手冊零組件
電話： 037-466333
Email: service@repairtw.com
Line id: @zzzz
www.repairtw.com

For the final adjustment, measure the CNC sampling measurement (DBB measurement) or while carrying out actual cutting. If the compensation amount is insufficient, increase LMC1 or LMC2 by 5% at a time. Note that if the setting is too high, biting may occur.

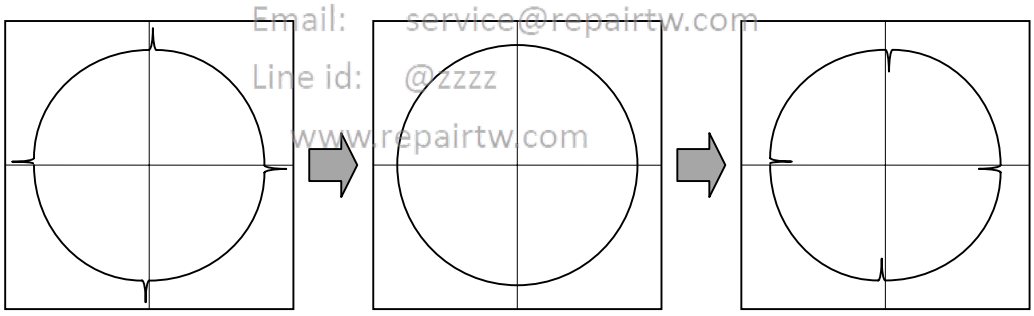

Compensation 0 **Optimum** **Too high**

POINT

1. When either parameter SV016: LMC1 or SV041: LMC2 is set to 0, the same amount of compensation is carried out in both the positive and negative direction with the setting value of the other parameter (the parameter not set to 0).
2. To compensate in only one direction, set -1 in the parameter (LMC1 or LMC2) for the direction in which compensation is prohibited.
3. The value set based on the friction torque is the standard value for LMC compensation. The optimum compensation value changes with the cutting conditions (cutting speed, cutting radius, blade type, workpiece material, etc.). Be sure to ultimately make test cuts matching the target cutting and determine the compensation amount.
4. When the disturbance observer has been started, the observer compensation will also be effective on quadrant protrusions, so the optimum compensation amount of the lost motion compensation will drop. Note that the quadrant protrusions cannot be completely compensated with only the disturbance observer.
5. Once LMC compensation type 1 is started, the overshooting compensation and the adaptive filter cannot be simultaneously started. A parameter error will occur.

(2) Unbalance torque compensation

If the load torque differs in the positive and negative directions such as with a vertical axis or slant axis, the torque offset (TOF) is set to carry out accurate lost motion compensation.

<Setting method>

Measure the unbalance torque. Carry out reciprocation operation (approx. F1000) with the axis to be compensated and measure the load current % when fed at a constant speed on the CNC servo monitor screen. The unbalance torque at this time is expressed with the following expression.

$$\text{Unbalance torque} = \left| \frac{(\text{+ feed load current \%}) - (\text{– feed load current \%})}{2} \right|$$

The unbalance torque value above is set for the torque offset (TOF).
If there is a difference in the protrusion amount according to the direction, make an adjustment with LMC2. Do not adjust with TOF.

(Example)

Assume that the load current % was −40% in the + direction and −20% in the – direction when JOG feed was carried out at approx. F1000. The unbalance torque is as shown below, so −30% is set for TOF.

$$\left| \frac{-40 + (-20)}{2} \right| = -30\%$$

No.	Abbrev.	Parameter name	Unit	Explanation	Setting range
SV032	TOF	Torque offset	Stall % (rated current %)	Set this when carrying out lost motion compensation. Set the unbalance torque amount.	–100 to 100

POINT

Even when TOF is set, the torque output characteristics of the motor and load current display of the CNC servo monitor will not change. Both the LMC compensation and collision detection function are affected.

(3) Adjusting the lost motion compensation timing

If the speed loop gain has been lowered from the standard setting value because the machine rigidity is low or because machine resonance occurs easily, or when cutting at high speeds, the quadrant protrusion may appear later than the quadrant changeover point on the servo control. In this case, suppress the quadrant protrusion by setting the lost motion compensation timing (SV039: LMCD) to delay the LMC compensation.

<Adjustment method>

If a delay occurs in the quadrant protrusion in the circle or arc cutting as shown below in respect to the cutting direction when CNC sampling measurement (DDB measurement) or actual cutting is carried out, and the compensation appears before the protrusion position, set the lost motion compensation timing (SV039:LMCD).
While measuring the arc path, increase LMCD by 10 msec at a time, to find the timing that the protrusion and compensation position match.

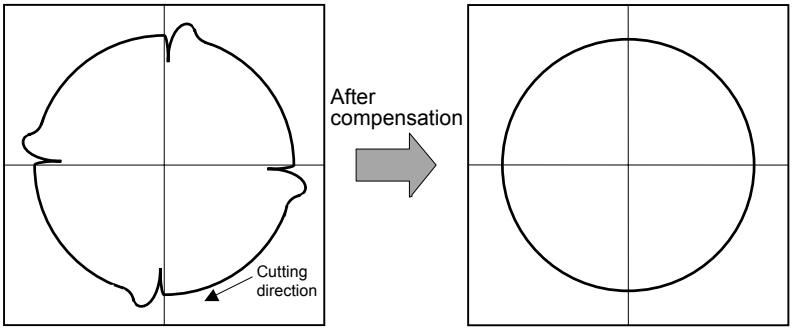

Before timing delay compensation **After timing delay compensation**

No.	Abbrev.	Parameter name	Unit	Explanation	Setting range
SV039	LMCD	Lost motion compensation timing	msec	Set this when the lost motion compensation timing does not match. Adjust while increasing the value by 10 at a time.	0 to 2000

When the LMCD is gradually raised, a two-peaked contour may occur at the motor FB position DBB measurement. However, due to the influence of the cutter diameter in cutting such as end milling, the actual cutting surface becomes smooth.
Because satisfactory cutting can be achieved even if this two-peaked contour occurs, consider the point where the protrusion becomes the smallest and finest possible without over compensating (bite-in) as the optimum setting.

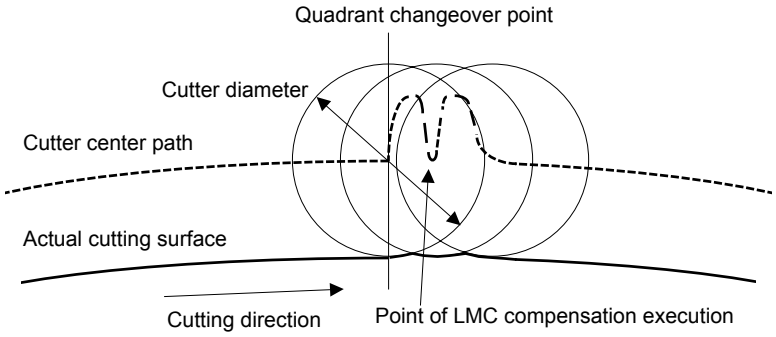

(4) Adjusting for feed forward control

In LMC compensation, a model position considering the position loop gain is calculated based on the position command sent from the CNC, and compensation is carried out when the feed changes to that direction. When the CNC carries out feed forward (fwd) control, overshooting equivalent to the operation fraction unit occurs in the position commands, and the timing of the model position direction change may be mistaken. As a result, the LMC compensation timing may deviate, or compensation may be carried out twice.
If feed forward control is carried out and the compensation does not operate correctly, adjust with the non-sensitive band (SV040: LMCT) during feed forward control. In this non-sensitive band control, overshooting of a set width or less is ignored. The model position direction change point is correctly recognized, and the LMC compensation is correctly executed.
This parameter is meaningless when feed forward control is not being carried out.

<Adjustment method>

If the compensation timing deviates during feed forward control, increase the LMCT setting by 1μm at a time.
Note that 2μm are set even when the LMCT is set to 0.

No.	Abbrev.	Parameter name	Unit	Explanation	Setting range
SV040	LMCT	Non-sensitive band during feed forward control	μm	This setting is valid only during feed forward control. 2 μm is set when this is set to 0. Adjust by increasing the value by 1 μm at a time.	0 to 100

POINT

Setting of the non-sensitive band (SV040: LMCT) during feed forward control is effective for improving overshooting compensation mis-operation during feed forward control.

8-3-5 Improvement of overshooting

The phenomenon when the machine position goes past or exceeds the command during feed stopping is called overshooting. Overshooting is compensated by overshooting compensation (OVS compensation).
The phenomenon when the machine position exceeds the command during feed stopping is called overshooting. Overshooting occurs due to the following two causes.

1. Machine system torsion: Overshooting will occur mainly during rapid traverse settling
2. Machine system friction: Overshooting will occur mainly during one pulse feed

Either phenomenon can be confirmed by measuring the position droop.

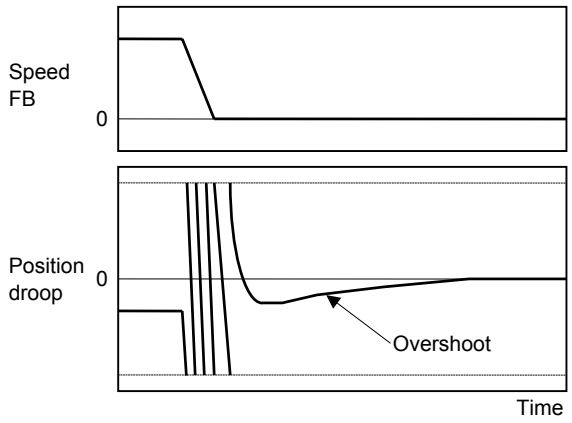

1. Overshooting during rapid traverse settling

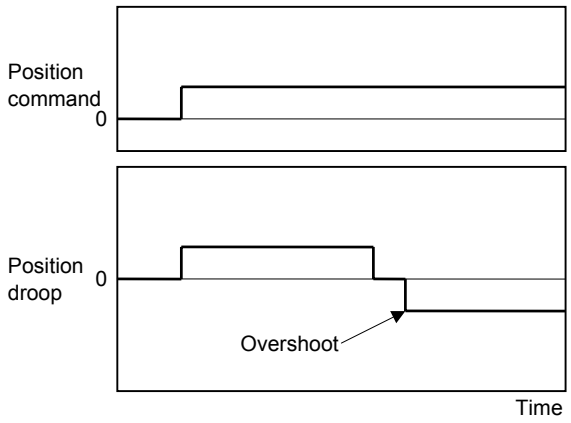

2. Overshooting during pulse feed

上正科技有限公司
購買、維修 此手冊零組件
電話：037 466233
Email：service@repairtw.com
Line id：@szz
www.repairtw.com

(1) Overshooting compensation (OVS compensation)

In OVS compensation, the overshooting is suppressed by subtracting the torque command set in the parameters when the motor stops.
OVS compensation has a compensation effect for the overshooting during either rapid traverse settling or pulse feed. Note that there is no compensation if the next feed command has been issued before the motor positioning (stop). (Therefore, there is no compensation during circle cutting.) There is also no compensation when the CNC is carrying out feed forward control.

<Setting and adjustment methods>

1) Set the special servo function selection 1 (SV027:SSF1) bit 10. (OVS compensation will start.)
2) Observe the position droop waveform using the D/A output, and increase the overshoot compensation 1 (SV031: OVS1) value 1% at a time. Set the smallest value where the overshooting does not occur. If SV042:OVS2 is 0, the overshooting will be compensated in both the forward/reverse directions with the OVS1 setting value.
3) If the compensation amount is to be changed in the direction to be compensated, set the + direction compensation value in OVS1 and the – direction compensation value in OVS2. If only one direction is to be compensated, set the side not to be compensated as –1. The compensation direction setting will be as reversed with the CNC parameter CW/CCW setting.

POINT

In OVS compensation, there is no compensation in the following cases.

1. There is no compensation if the next feed command has been issued before the motor positioning (stop). (There is no compensation in circle cutting.)
2. There is no compensation when the CNC is carrying out feed forward (fwd) control.

No.	Abbrev.	Parameter name	Explanation
SV027	SSF1	Special servo function selection 1	The overshooting compensation starts with the following parameter.

15	14	13	12	11	10	9	8	7	6	5	4	3	2	1	0
aft	zrn2				ovs1	lmc2	lmc1			vfct2	vfct1				

bit		Meaning when "0" is set.	Meaning when "1" is set.
10	ovs1	Overshooting compensation type 1 stop	Overshooting compensation type 1 start

No.	Abbrev.	Parameter name	Unit	Explanation	Setting range
SV031	OVS1	Overshooting compensation 1	Stall % (rated current %)	Increase the value by 1% at a time, and find the value where overshooting does not occur. When OVS2 is set to 0, the setting value will be applied in both the ± directions.	–1 to 100
SV042	OVS2	Overshooting compensation 2	Stall % (rated current %)	Set 0 as a standard. Set this when the compensation amount is to be changed according to the direction.	–1 to 100

POINT

1. When either parameter SV031: OVS1 or SV042: OVS2 is set to 0, the same amount of compensation is carried out in both the positive and negative direction, using the setting value of the other parameter (the parameter not set to 0).
2. To compensate in only one direction, set -1 in the parameter (OVS1 or OVS2) for the direction in which compensation is prohibited.
3. For contour cutting, the projection at the arc end point is compensated with OVS compensation. LMC compensation is carried out at the arc starting point.

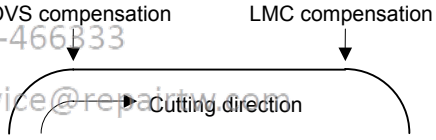

上百科技有限公司
購買、維修 此手冊零組件
電話： 037-466833
Email: service@repairtw.com
Line id: @zzzz
www.repairtw.com

8-3-6 Improvement of characteristics during acceleration/deceleration

(1) SHG control (option function)

Because SHG control has a smoother response than conventional position controls, the acceleration/deceleration torque (current FB) has more ideal output characteristics (A constant torque is output during acceleration/deceleration.) The peak torque is kept low by the same acceleration/deceleration time constant, enabling the time constant to be shortened.
Refer to item "(3) SHG control" in section "8-2-3 Position loop gain" for details on setting SHG control.

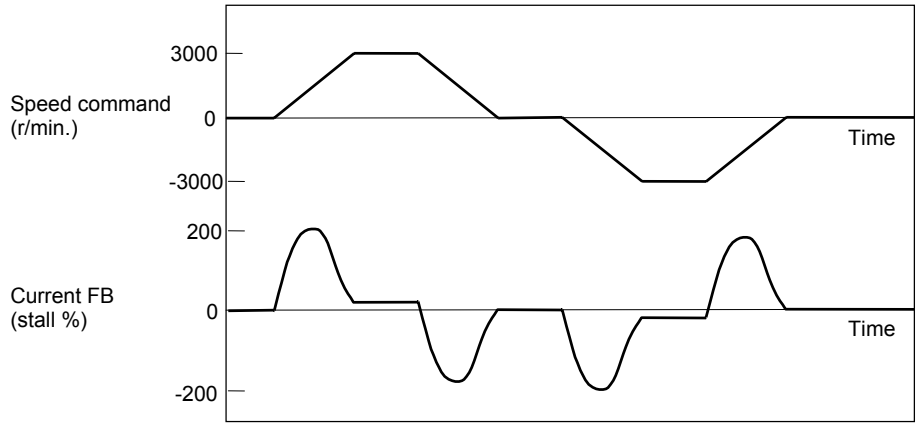

Acceleration/deceleration characteristics during conventional control

上正科技有限公司
購買、維修 此手冊零組件
電話： 037-466333
Email: service@repairtw.com
Line id: @zzzz
www.repairtw.com

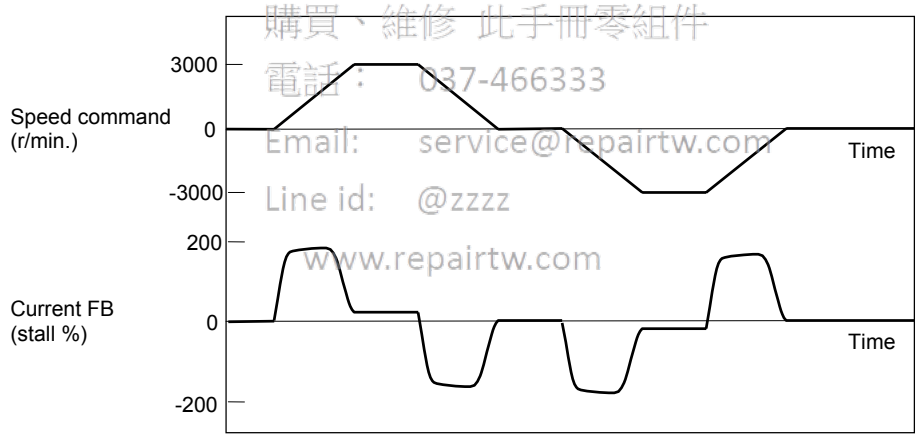

Acceleration/deceleration characteristics during SHG control

No.	Abbrev.	Parameter name	Setting ratio	Setting example					Explanation	Setting range
SV003 (SV049)	PGN1 (PGN1sp)	Position loop gain 1	1	23	26	33	38	47	Always set a combination of 3 parameters.	1 to 200
SV004 (SV050)	PGN2 (PGN2sp)	Position loop gain 2	8/3	62	70	86	102	125		0 to 999
SV057 (SV058)	SHGC (SHGCsp)	SHG control gain	6	140	160	187	225	281		0 to 999
SV008	VIA	Speed loop leading compensation	Set 1900 as a standard value during SHG control.							1 to 9999
SV015	FFC	Acceleration feed forward gain	Set 100 as a standard value during SHG control.							0 to 999

(2) Acceleration feed forward

Vibration may occur at 10 to 20 Hz during acceleration/deceleration when a short time constant of 30 msec or less is applied, and a position loop gain (PGN1) higher than the general standard value or SHG control is used. This is because the torque is insufficient when starting or when starting deceleration, and can be resolved by setting the acceleration feed forward gain (SV015:FFC). This is also effective in reducing the peak current (torque).
While measuring the current command waveform, increase FFC by 50 to 100 at a time and set the value where vibration does not occur.

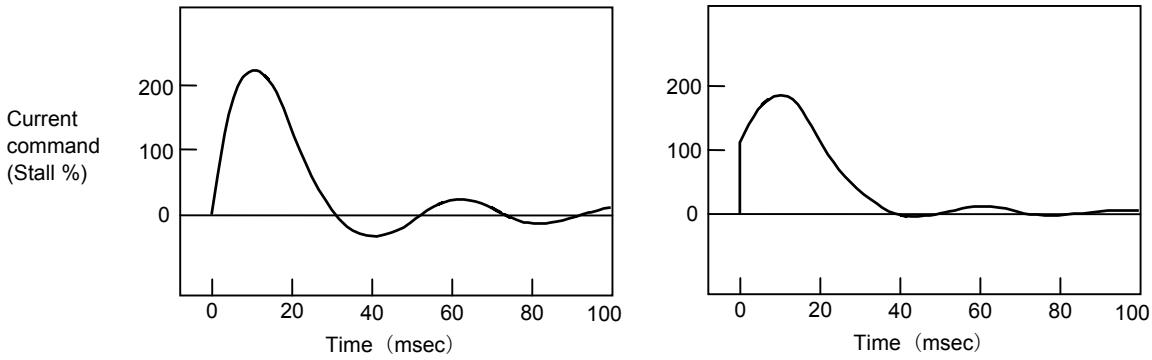

No FFC setting **With FFC setting**

Acceleration feed forward gain means that the speed loop gain during acceleration/deceleration is raised equivalently. Thus, the torque (current command) required during acceleration/deceleration starts sooner. The synchronization precision will improve if the FFC of the delayed side axis is raised between axes for which high-precision synchronous control (such as synchronous tap control and superimposition control).

上正科技有限公司
購買、維修 此手冊零組件
電話： 037-466333
Email: service@repairtw.com
Line id: @zzzz
www.repairtw.com

No.	Abbrev.	Parameter name	Unit	Explanation					Setting range
SV015	FFC	Acceleration feed forward gain	%	The standard setting value is 0. To improve the acceleration/deceleration characteristics, increase the value by approx. A given below. During SHG control, use the standard setting values given below.					1 to 999
				Motor	**MF23**	**RF43/73**	**SF52/53/ 102/103**	**SF202**	
				A	10	10	50	50	
				Standard value for SHG control	10	10	100	100	

POINT Overshooting occurs easily when a value above the standard value is set during SHG control.

(3) Inductive voltage compensation

The current loop response is improved by compensating the back electromotive force element induced by the motor rotation. This improved the current command efficiency, and allows the acceleration/deceleration time constant to the shortened.

<Adjustment method>

1) Set 1 in "mon" of the special servo function selection 3 (SV034: SSF3) bit 0, and output the current command and current FB to the servo monitor.
2) While accelerating/decelerating at rapid traverse, adjust the inductive voltage compensation gain (SV047:EC) so that the current FB peak is a few % smaller than the current command peak.

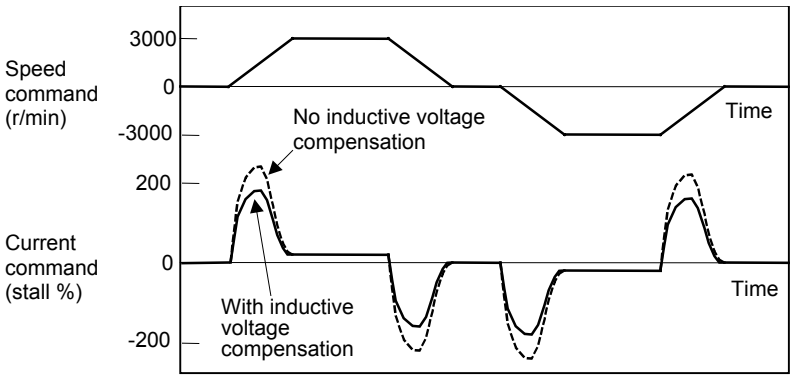

Inductive voltage compensation

上正科技有限公司
購買、維修 此手冊零組件
電話： 037-466333
Email: service@repairtw.com
Line id: @zzzz
www.repairtw.com

To adjust the inductive voltage compensation, output 1 second of the maximum current command value and 1 second of the maximum current FB value to MAX current 1 and MAX current 2 on the CNC servo monitor screen and observe.
Change over and display "mon" of the special servo function selection 3 (SV034: SSF3).

No.	Abbrev.	Parameter name	Explanation
SV034	SSF3	Special servo function selection 3	The display data for the maximum current value on the servo monitor is determined with the following parameter.

15	14	13	12	11	10	9	8	7	6	5	4	3	2	1	0
									daf1		dac1				mon

bit		Monitor	Meaning when 0 is set	Meaning when 1 is set
0	mon	MAX current 1	Maximum current command value after power is turned ON	Maximum current command value for one second
		MAX current 2	Maximum current com-mand value for one second	Maximum current FB value for one second

No.	Abbrev.	Parameter name	Unit	Explanation	Setting range
SV047	EC	Inductive voltage compensation gain	%	Set 100% as a standard. Lower the gain if the current FB peak exceeds the current command peak.	0 to 200

POINT

If the current FB peak is larger than the current command peak, overcompensation or overcurrent (alarm 3A) could occur easily. Note that when using with a large load inertia, or when using over the rated rotation speed with a motor set to rated rotation speed < maximum rotation speed, overcompensation could occur easily.

8-4 Setting for emergency stop

The emergency stop referred to here indicates the following states.
1) When the external emergency stop was input (including other axis alarms)
2) When the CNC power down was detected
3) When a servo alarm was detected

8-4-1 Deceleration control

This intelligent servomotor servo amplifier decelerates the motor according to the set time constant in the ready ON state even when an emergency stop occurs, and activates the dynamic brakes after stopping and turning ready OFF. This series of controls is called deceleration control. In the intelligent servomotor, deceleration control is the standard method of stopping during an emergency stop.

<Features>

1) When the load inertia is large, deceleration and stop are possible with a short time constant using the dynamic brakes. (Stopping is possible with a basically normal acceleration/ deceleration time constant.)
2) When used in a transfer line, etc., stopping with little shock is possible by setting a long time constant.

(1) Setting the deceleration control time constant

The time to stopping from the rapid traverse rate (rapid: axis specification parameter) is set in the deceleration control time constant (SV056: EMGt). A position loop step stop is carried out when 0 is set.

When linear (straight line) acceleration/deceleration is selected for the rapid traverse, the same value as the acceleration/deceleration time constant (G0tL) becomes the standard value. When another acceleration/deceleration pattern is selected, set the rapid traverse to linear acceleration/deceleration. Adjust to the optimum acceleration/deceleration time constant, and set that value as the standard value.

電話： 037-466333
Email: service@repairtw.com
www.repairtw.com

<Operation>

When an emergency stop occurs, the motor will decelerate at the same inclination from each speed, and will change to the dynamic brakes at 60 r/min or less. If the power fails, etc., the dynamic brakes will be applied during the deceleration control. When the motor brakes are controlled with amplifier output while using an unbalanced axis, the motor brake control output operates simultaneously with the changeover to the dynamic brakes.

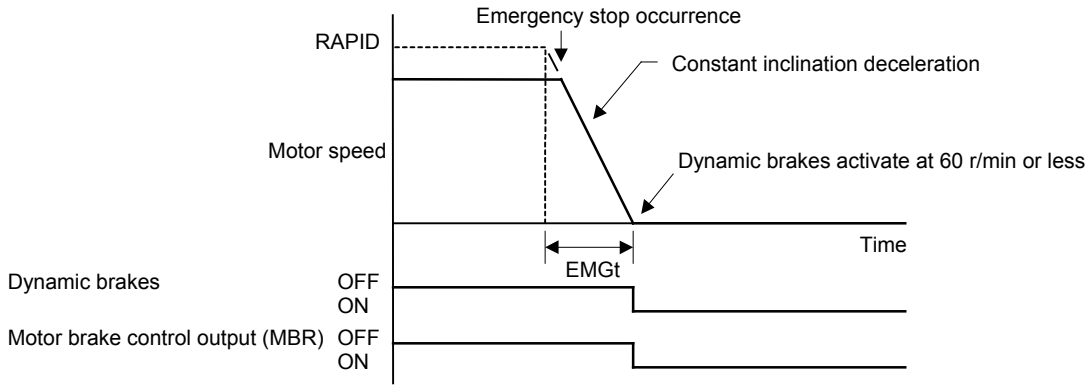

No.	Abbrev.	Parameter name	Unit	Explanation	Setting range
SV056	EMGt	Deceleration control time constant	msec	Set the time to stop from rapid traverse rate (rapid). Set the same value as the rapid traverse acceleration/deceleration time constant (G0tL) as a standard.	0 to 5000

POINT

1. The deceleration will not be controlled when a servo alarm that uses the dynamic brake stopping method occurs. Stopping is by the dynamic brake method regardless of the parameter setting.
2. When a power failure occurs, the stopping method may change over to a dynamic brake stop during deceleration control if the deceleration time constant is set comparatively long. This is because of low bus voltage in the amplifier.

⚠ CAUTION

If the deceleration control time constant (EMGt) is set longer than the acceleration/deceleration time constant, the overtravel point (stroke end point) may be exceeded.
A collision may be caused on the machine end, so be careful.

(2) Dynamic brake stop

When an emergency stop occurs, it is possible to have the machine stop from the beginning using a dynamic brake without controlling the deceleration. Set bit 0 in the servo specifications (SV017: SPEC) to select a dynamic brake stop.
In a dynamic brake stop, the dynamic brakes operate at the same time the emergency stop occurs, and the motor brake output also operates at the same time.

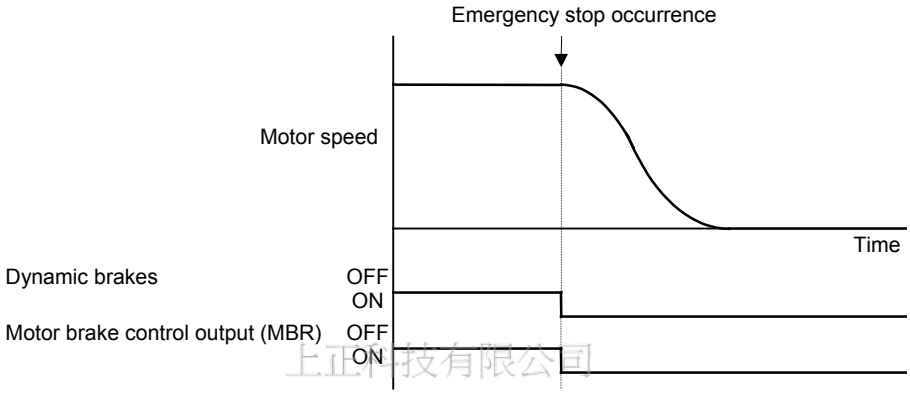

上正科技有限公司
購買、維修 此手冊零組件
電話：
Email: service@repairtw.com
Line id: @zzzz
www.repairtw.com

No.	Abbrev.	Parameter name	Explanation
SV017	SPEC	Servo specifications	Set the dynamic brake stop with the following parameter.

15	14	13	12	11	10	9	8	7	6	5	4	3	2	1	0
								abs		vdir		mc			dmk

bit		Meaning when "0" is set.	Meaning when "1" is set.
0	dmk	Deceleration control stop	Dynamic brake stop

POINT

If a dynamic brake stop is selected, the software does not participate at all in the motor stop control after an emergency stop occurs.

⚠ CAUTION

When a dynamic brake stop is selected, in general the coasting distance during an emergency stop will be comparatively longer, so be careful.

(3) Deceleration control stop distance

If stopping with deceleration control during an emergency stop, the stop distance L_{DEC} can be approximately calculated with the following expression. However, the value will be higher than the following expression if the current is limited during deceleration. Refer to section "3-3-2 Coasting amount" for the stop distance using dynamic brakes.

$$L_{DEC} = \frac{F}{PGN1 \times 60} + \frac{1}{2} \times \frac{F}{60} \times \frac{F \times EMGt}{rapid \times 1000} \ (mm)$$

F	:	Feedrate during emergency stopped		(mm/min)
rapid	:	Rapid traverse rate		(mm/min)
PGN1	:	Position loop gain 1	(SV003)	(rad/sec)
EMGt	:	Deceleration control time constant	(SV056)	(msec)

8-4-2 Vertical axis drop prevention control

The vertical axis drop prevention control is a function that prevents the vertical axis from dropping due to a delay in the brake operation when an emergency stop occurs. The servo ready OFF will be delayed by the time set in the parameter from when the emergency stop occurs. Thus, the no-control time until the brakes activate can be eliminated.

<Setting and adjustment methods>

Set the time to delay the ready OFF in the vertical axis drop prevention time (SV048:EMGrt). Read the current position on the CNC screen, and apply the emergency stop. Set the minimum delay time where the axis does not drop.

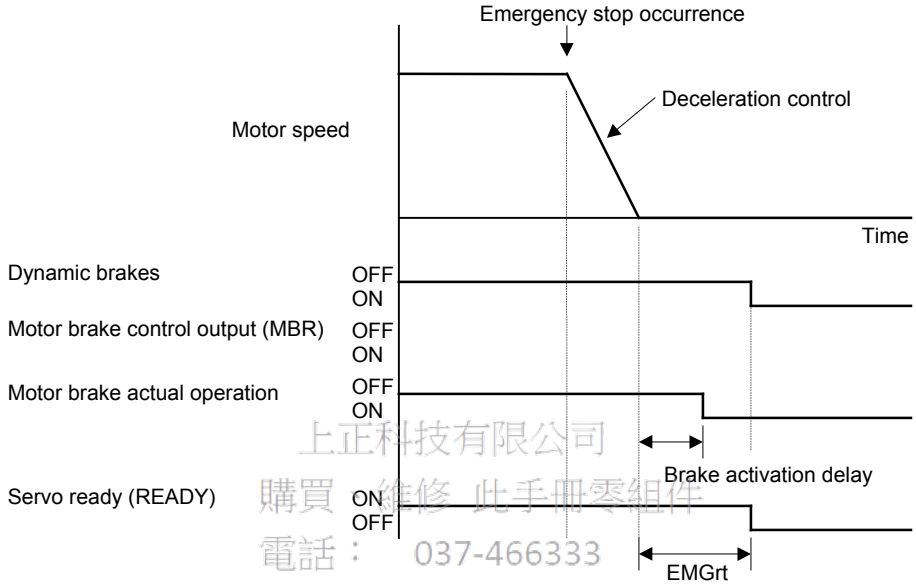

上正科技有限公司
購買 維修 此手冊零組件
電話： 037-466333
Email: service@repairtw.com
Line id @xzz
www.repairtw.com

No.	Abbrev.	Parameter name	Unit	Explanation	Setting range
SV048	EMGrt	Vertical axis drop prevention time	msec	Input the time to delay the ready OFF when an emergency stop occurs. Increase the setting by 100 msec at a time and set the minimum value where the axis does not drop.	0 to 2000

POINT

1. This control will not function if the dynamic brake stop is selected with the servo specifications (SV017: SPEC).
2. This control will not function if an alarm for which the dynamic brakes are set as the stopping method occurs in an axis where vertical axis drop prevention control is being carried out.
3. A drop amount of several μm to 10μm will remain due to the brake play.

⚠ CAUTION

1. Do not set a vertical axis drop prevention time longer than required. The servo control and brakes could collide causing an overload alarm or amplifier damage. There is no problem if the duplicate time is within 100msec.
2. During a power failure, vertical axis drop prevention control (including deceleration control) exceeding 100msec cannot be guaranteed. The control will change to the dynamic brakes.

8-5 Collision detection

The purpose of the collision detection function is to quickly detect a collision and decelerate to a stop. This suppresses the excessive torque generated to the machine tool, and suppresses the occurrence of an abnormality. Impact during a collision cannot be prevented even when the collision detection function is used, so this function does not guarantee that the machine will not break and does not guarantee the machine accuracy after a collision. Thus, the conventional caution is required to prevent machine collisions from occurring.

(1) Collision detection method 1

The required torque is calculated from the position command issued from the NC. The disturbance torque is calculated from the difference with the actual torque. When this disturbance torque exceeds the collision detection level set with the parameters, the axis will decelerate to a stop with at 80% of the motor's maximum torque. After decelerating to a stop, the alarm 58 or 59 will occur, and the system will stop.

	Collision detec-tion level setting parameter	Detection alarm
For rapid traverse (for G0 feed)	SV060	Alarm 58
For cutting feed (for G1 feed)	SV060×clG1 (SV035)	Alarm 59

The collision detection level for rapid traverse (G0) is set with TLMT: SVC060. The collision detection level for cutting feed (G1) is set to 0 to 7-fold (SV053.clG1) based on the collision detection level for rapid traverse. If 0 is set for clG1, the collision detection method 1 will not function during cutting feed. If 0 is set for TLMT: SV060, all collision detections (method 1 and method 2) will not function.

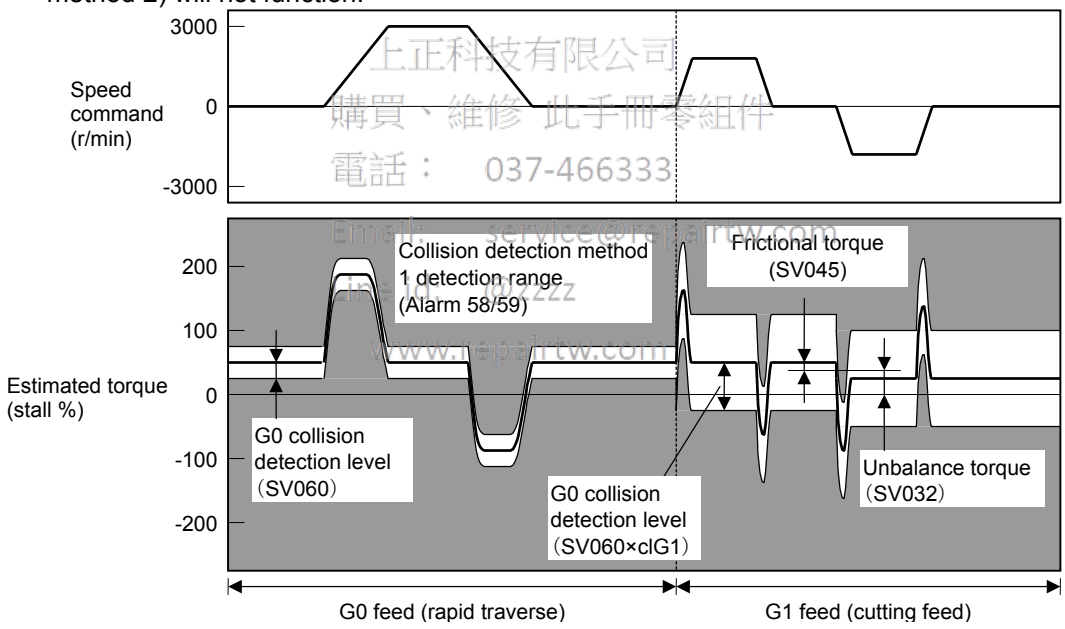

上正科技有限公司
購買、維修 此手冊零組件
電話： 037-466333
Email: service@repairtw.com
www.repairtw.com

Alarm detection range for collision detection method 1

(2) Collision detection method 2

When the current command reaches the motor's maximum current, the axis will decelerate to a stop with at 80% of the motor's maximum torque. After decelerating to a stop, the alarm 5A will occur, and the system will stop. If the acceleration/deceleration time constant is short and incorrect detections are made easily during normal operation, increase the acceleration/deceleration time constant and adjust so that the current during acceleration is not saturated (so that the maximum current is not reached).

If the acceleration/deceleration time constant cannot be increased, set parameter SV035.bit11: SSF4.cl2n to 1 to ignore the collision detection method 2.

> ⚠ **CAUTION** The collision detection function does not guarantee safety or machine accuracy during a collision. Thus, the conventional caution is required to prevent machine collisions from occurring.

<Setting and adjustment methods>

1. Validate the extended function. (Set sv035: SSF4, bit7 (eram) to 1.)
2. Confirm that SHG control is being used. The collision detection function is valid only during SHG control.
3. Measure the unbalance torque, and set in the torque offset (SV03: TOF). Refer to the section "8-3-4 (2) Unbalance torque compensation" for details on measuring the unbalance torque.
4. Measure the frictional torque, and set in the frictional torque (SV045: TRUB). Refer to the section "8-3-4-(1) Lost motion compensation" for details on measuring the frictional torque.
5. Set the estimated torque gain (SV059: TCNV) with the following method.
   Set sv035: SSF5, bit 15 (clt) for the axis to be adjusted to 1.
   Repeatedly move the axis to be adjusted in both directions at the maximum rapid traverse rate. Observe the MPOF display value on the NC unit's [I/F Diagnosis/Servo Monitor] screen, and continue operation until the display value stabilizes.
   Once the display value stabilizes, set that value as the estimated torque gain (SV059: TCNV).
6. If the acceleration/deceleration time is short and the current is easily saturated, set SV035.bit15(cl2n) to 1, and ignore the collision detection method 2.
7. Set the collision detection level.

Feed	Detection level setting	Explanation
G0	SV060	First set SV060: TLEV = 100, and carry out no-load operation at the maximum rapid traverse feed rate. If an alarm does not occur, lower the setting by 10, and if an alarm occurs, raise the setting by 20. Set a value that is 1.5 times the limit value where the alarm does not occur. If SV034.mon is set to 7, the maximum disturbance torque will appear on the NC servo monitor, so adjust using this value as a reference.
G1	SV060×clG1 (SV035)	The detection level for G1 is set as an integer-fold of the G0 detection level. Calculate the maximum cutting load, and adjust the SV035.clG1 setting value so that the detection level is larger than the maximum cutting load.

上正科技有限公司
購買、維修此手冊零組件
電話： 037-466333
Email: service@repairtw.com
Line Id: @jz777
www.repairtw.com

POINT

1. The SHG control must be validated to use the collision detection function or to carry out load inertia measurement operation.
2. When measuring the estimated torque gain, if the unbalance torque (SV032) and frictional torque (SV045) setting values are changed, the measurement results will change. The unbalance torque and frictional torque must be set as accurately as possible to carry out accurate measurement.
3. Set the detection level with an allowance to avoid incorrect detections.
4. When SV060 is set to 0, all collision detection functions will be invalidated.

<table>
<tr><th>No.</th><th>Abbrev.</th><th>Parameter name</th><th colspan="3">Explanation</th></tr>
<tr><td>SV035</td><td>SSF4</td><td>Special servo function selection 4</td><td colspan="3">The following parameters are used for the collision detection.
<table>
<tr><td>15</td><td>14</td><td>13</td><td>12</td><td>11</td><td>10</td><td>9</td><td>8</td><td>7</td><td>6</td><td>5</td><td>4</td><td>3</td><td>2</td><td>1</td><td>0</td></tr>
<tr><td>clt</td><td colspan="3">clG1</td><td>cl2n</td><td>clet</td><td></td><td></td><td>eram</td><td></td><td></td><td></td><td></td><td></td><td></td><td></td></tr>
</table>
<table>
<tr><th colspan="2">bit</th><th>Meaning when "0" is set.</th><th>Meaning when "1" is set.</th></tr>
<tr><td>7</td><td>eram</td><td>Extended function invalid</td><td>Extended function invalid</td></tr>
<tr><td>10</td><td>clet</td><td>During normal use</td><td>The latest two-second estimated disturbance torque peak value (3.5ms average value) is displayed at MPOF on the Servo Monitor screen.</td></tr>
<tr><td>11</td><td>cl2n</td><td>Collision detection method 2 valid</td><td>Collision detection method 2 invalid</td></tr>
<tr><td>12 to 14</td><td>clG1</td><td colspan="2">Set the collision detection level for collision detection method 1, cutting (G1) feed.
The G1 collision detection level is SV060 × clG1.
When clG1 is set to 0, the collision detection method 1 will not function during cutting feed.</td></tr>
<tr><td>15</td><td>clt</td><td>During normal use</td><td>The value to be set in TCNV is calculated and displayed at MPOF on the Servo Monitor screen.</td></tr>
</table></td></tr>
<tr><td>SV032</td><td>TOF</td><td>Torque offset</td><td>Stall % (rated current %)</td><td>Set the unbalance torque amount.</td><td>–100 to 100</td></tr>
<tr><td>SV045</td><td>TRUB</td><td>Frictional torque</td><td>Stall % (rated current %)</td><td>Set the frictional torque for using the collision detection function.</td><td>0 to 100</td></tr>
<tr><td>SV059</td><td>TCNV</td><td>Torque estimated gain (load inertia rate)</td><td></td><td>Set the torque estimated gain for using the collision detection function.
If acceleration/deceleration operation is carried out with SV035.clt set to 1 and SV060 set to 0, the estimated torque gain will be displayed on the NC Monitor screen.</td><td>0 to 5000</td></tr>
<tr><td>SV060</td><td>TLMT</td><td>G0 collision detection level</td><td>Stall % (rated current %)</td><td>Set the collision detection level of method 1 G0 feed when using the collision detection function.
When 0 is set, all collision detection functions will not function.</td><td>0 to 200</td></tr>
</table>

上正科技有限公司
購買、維修 此手冊零組件
電話： 037-466333
Email: service@repairtw.com
Line id: @zzzz
www.repairtw.com

8-6 Parameter list

No.	Abbrev.	Parameter name	Unit	Explanation	Setting range
SV001	PC1	Motor side gear ratio		Set the motor side and machine side gear ratio. For the rotary axis, set the total deceleration (acceleration) ratio. Even if the gear ratio is within the setting range, the electronic gears may overflow and cause an alarm.	1 to 32767
SV002	PC2	Machine side gear ratio			1 to 32767
SV003	PGN1	Position loop gain 1	rad/sec	Set the position loop gain. Set 33 as a standard. When using SHG control, also set PGN2 and SHGC.	1 to 200
SV004	PGN2	Position loop gain 2	rad/sec	Set 0 as a standard. When using SHG control, also set PGN1 and SHGC.	0 to 999
SV005	VGN1	Speed loop gain		Set this according to the motor inertia size. If motor resonance occurs, lower the value by 20 to 30% at a time. The setting value should be 70 to 80% of the value where resonance does not occur.	1 to 999
SV006				Set "0".	0
SV007				Set "0".	0
SV008	VIA	Speed loop leading compensation		Set 1364 as a standard. During SHG control, set 1900 as a standard. Raise this value to improve contour tracking precision in high-speed cutting. Lower this value when the position droop vibrates. Adjust by 100 at a time.	1 to 9999
SV009	IQA	q axis leading compensation		This setting is determined by the motor's electrical characteristics. Set the standard parameters for all parameters. (These are used for maker adjustments.)	1 to 20480
SV010	IDA	d axis leading compensation			1 to 20480
SV011	IQG	q axis gain			1 to 2560
SV012	IDG	d axis gain			1 to 2560
SV013	ILMT	Current limit value	Stall % (rated current %)	Set the standard parameter value. The maximum torque is determined by the motor specifications.	0 to 500
SV014	ILMTsp	Current limit value during special operation	Stall % (rated current %)	Set the standard parameter value. Set the limit torque mainly for the stopper.	0 to 500
SV015	FFC	Acceleration feed forward gain	%	The standard setting value is 0. For SGH control, set 100. To improve the acceleration/deceleration characteristics, increase the value by 50 to 100 at a time.	1 to 999
SV016	LMC1	Lost motion compensation 1	Stall % (rated current %)	The protrusion amount during quadrant changeover is suppressed. Adjust in 5% units. When LMC2 is set to 0, the setting value will apply in both the ± directions.	–1 to 200
SV017	SPEC	Servo specifications		See the bit table below.	
SV018	PIT	Ball screw pitch	mm	Set the ball screw pitch. Set 360 for the rotary axis. Refer to the CNC Instruction Manual for the inch ball screw.	1 to 32767
SV019	RNG1	Position detector resolution	kp/rev	Set the motor detector resolution for both settings. Refer to the Standard parameter list per motor for the settings.	8 to 100
SV020	RNG2	Speed detector resolution	kp/rev		8 to 100

bit		Meaning when "0" is set	Meaning when "1" is set
0	dmk	Deceleration controlo stop selection (SVJ2 standard)	Dynamic brake stop selection
1			
2			
3			
4			
5			
6			
7	abs	Incremental control	Absolute position control
8			
9			
10			
11			
12	mtc	Motor table selection according to model Set 0100 for the intelligent servomotor HS Series.	
13			
14			
15			

Set "0" in bits with no particular description.

SV001 is a parameter validated when the NC power is turned ON again.

上正科技有限公司
Email: sales@spsintech.com
www.spsintech.com

No.	Abbrev.	Parameter name	Unit	Explanation	Setting range
SV021	OLT	Overload time constant	sec	Set 60 as a standard. (For maker adjustment)	1 to 300
SV022	OLL	Overload detection level	Stall % (rated current %)	Set 150 as a standard. (For maker adjustment)	50 to 500
SV023	OD1	Excessive error detection width during servo ON	mm	When 0 is set, the excessive error alarm during servo ON will not be detected. **<Standard setting value>** $OD1 = OD2 = \frac{\text{Rapid traverse rate (mm/min)}}{60 \times PGN1} \div 2$ (mm)	0 to 32767
SV024	INP	In-position detection width	μm	Set 50 as a standard. Set the precision required by the machine.	0 to 32767
SV025	MTYP	Motor type		Set the motor type. Refer to the Standard parameter list per motor for the settings.	HEX setting
SV026	OD2	Excessive error detection width during servo OFF	mm	When 0 is set, the excessive error alarm during servo OFF will not be detected. Refer to the SV023 (OD1) column for the standard setting values.	0 to 32767
SV027	SSF1	Special servo function selection 1		(see bit table below)	
SV028				Set "0".	0
SV029				Set "0".	0
SV030	TDCG	Voltage non-sensitive band compensation/ fine torque compensation Cx		Set the voltage non-sensitive band compensation amount in the low-order 8 bits. Normally set to 0. Set 20 to use this function. Set the fine torque compensation amount Cx in the high-order 8 bits. Normally set to 0. Set 255 to use this function. The following will result if 20 is set as the voltage non-sensitive compensation amount, and 255 is set as the fine torque amount. 255 × 256 +20 =65300 65300 – 65536 = –236	0
SV031	OVS1	Overshooting compensation 1	Stall % (rated current %)	The overshooting is suppressed. Set with a 1% unit. When OVS2 is set to 0, the setting value will be applied in both the ± directions.	–1 to 100
SV032	TOP	Torque offset	Stall % (rated current %)	Set the unbalance torque for using the lost motion compensation and collision detection functions. Refer to section "8-3-4(2) Unbalance torque compensation" for details on measuring the unbalance torque.	–100 to 100

SV027 bit table:

bit		Meaning when "0" is set	Meaning when "1" is set
0			
1			
2			
3			
4	vfct1	Set the jitter compensation No. of compensation pulses with a binary.	
5	vfct2		
6	cln	Collision detection invalid during deceleration to stop	Collision detection valid at all times
7			
8	lmc1	Lost motion compensation type 1 stop	Lost motion compensation type 1 start
9	lmc2	Lost motion compensation type 2 stop	Lost motion compensation type 2 start
10	ovs1	Overshooting compensation type 1 stop	Overshooting compensation type 1 start
11			
12			
13			
14		Set "1".	
15			

Set "0" in bits with no particular description.

SV001 is a parameter validated when the CNC power is turned ON again.

上正科技有限公司 購買前諮詢 此手冊參考使 電話：0937 Email: Line id: www.repair

<table>
<tr><th>No.</th><th>Abbrev.</th><th>Parameter name</th><th>Explanation</th><th>Setting range</th></tr>
<tr><td>SV033</td><td>SSF2</td><td>Special servo function selection 2</td><td>
<table>
<tr><th colspan="2">bit</th><th>Meaning when "0" is set</th><th>Meaning when "1" is set</th></tr>
<tr><td>0
1
2
3</td><td>nfd</td><td colspan="2">Set the filter depth for the notch filter (SV038: FHz).
The control is stabilized by making the filter shallower.
Setting value 0 2 4 6 8 A C E
Depth (dB) ∞ –18.1 –12.0 –8.5 –6.0 –4.1 –2.5 –1.2</td></tr>
<tr><td>4</td><td></td><td></td><td></td></tr>
<tr><td>5</td><td></td><td></td><td></td></tr>
<tr><td>6</td><td></td><td></td><td></td></tr>
<tr><td>7</td><td></td><td></td><td></td></tr>
<tr><td>8</td><td></td><td></td><td></td></tr>
<tr><td>9</td><td></td><td></td><td></td></tr>
<tr><td>10</td><td></td><td></td><td></td></tr>
<tr><td>11</td><td></td><td></td><td></td></tr>
<tr><td>12</td><td></td><td></td><td></td></tr>
<tr><td>13</td><td></td><td></td><td></td></tr>
<tr><td>14</td><td></td><td></td><td></td></tr>
<tr><td>15</td><td></td><td></td><td></td></tr>
</table>
Set "0" in bits with no particular description.
</td><td></td></tr>
<tr><td>SV034</td><td>SSF3</td><td>Special servo function selection 3</td><td>
CNC servo monitor MAX current display data changeover
<table>
<tr><th colspan="2">bit</th><th>Meaning when "0" is set</th><th>Meaning when "1" is set</th></tr>
<tr><td>0</td><td>mon</td><td>Current command monitor value</td><td>Current FB monitor value</td></tr>
<tr><td>1</td><td></td><td></td><td></td></tr>
<tr><td>2</td><td></td><td></td><td></td></tr>
<tr><td>3</td><td></td><td></td><td></td></tr>
<tr><td>4</td><td>dac1</td><td>D/A output ch.1 overflow setting</td><td>D/A output ch.1 clamp setting</td></tr>
<tr><td>5</td><td></td><td></td><td></td></tr>
<tr><td>6</td><td>daf1</td><td>D/A output ch.1 no filter</td><td>D/A output ch.1 filter setting</td></tr>
<tr><td>7</td><td></td><td></td><td></td></tr>
<tr><td>8</td><td></td><td></td><td></td></tr>
<tr><td>9</td><td></td><td></td><td></td></tr>
<tr><td>10</td><td></td><td></td><td></td></tr>
<tr><td>11</td><td></td><td></td><td></td></tr>
<tr><td>12</td><td></td><td></td><td></td></tr>
<tr><td>13</td><td></td><td></td><td></td></tr>
<tr><td>14</td><td></td><td></td><td></td></tr>
<tr><td>15</td><td></td><td></td><td></td></tr>
</table>
Set "0" in bits with no particular description.
</td><td></td></tr>
</table>

上揚科技有限公司
購買、維修 此手冊零組件
電話： 037-466333
Email: service@repairtw.com
Line ID: @zzzz
www.repairtw.com

<table>
<tr><th>No.</th><th>Abbrev.</th><th>Parameter name</th><th>Explanation</th><th>Setting range</th></tr>
<tr><td>SV035</td><td>SSF4</td><td>Special servo function selection 4</td><td colspan="3">
<table>
<tr><th>bit</th><th></th><th>Meaning when "0" is set</th><th>Meaning when "1" is set</th></tr>
<tr><td>0</td><td></td><td></td><td></td></tr>
<tr><td>1</td><td></td><td></td><td></td></tr>
<tr><td>2</td><td></td><td></td><td></td></tr>
<tr><td>3</td><td></td><td></td><td></td></tr>
<tr><td>4</td><td></td><td></td><td></td></tr>
<tr><td>5</td><td></td><td></td><td></td></tr>
<tr><td>6</td><td></td><td></td><td></td></tr>
<tr><td>7</td><td>eram</td><td>Extended function invalid</td><td>Extended function invalid</td></tr>
<tr><td>8</td><td></td><td></td><td></td></tr>
<tr><td>9</td><td></td><td></td><td></td></tr>
<tr><td>10</td><td>clet</td><td>During normal use</td><td>The latest two-second estimated disturbance torque peak value (3.5ms average value) is displayed at MPOF on the Servo Monitor screen.</td></tr>
<tr><td>11</td><td>cl2n</td><td>Collision detection method 2 valid</td><td>Collision detection method 2 invalid</td></tr>
<tr><td>12
13
14</td><td>clG1</td><td colspan="2">Set the collision detection level for collision detection method 1, cutting (G1) feed.
The G1 collision detection level is SV060 × clG1.
When clG1 is set to 0, the collision detection method 1 will not function during cutting feed.</td></tr>
<tr><td>15</td><td>clt</td><td>During normal use</td><td>The value to be set in TCNV is calculated and displayed at MPOF on the Servo Monitor screen.</td></tr>
</table>
Set "0" in bits with no particular description.
</td></tr>
<tr><td>(SV036)</td><td>PTYP</td><td>Regenerative resistor type</td><td></td><td>Set the regenerative resistor type.
Always set 1000.</td><td>1000</td></tr>
<tr><td>SV037</td><td>JL</td><td>Load inertia scale</td><td>%</td><td>Set the load inertia that includes the motor in respect to the motor inertia. (When the motor is a single unit, set 100%)
$JL = \frac{Jl + Jm}{Jm}$ Jm: Motor inertia
Jl : Machine inertia</td><td>0 to 5000</td></tr>
<tr><td>SV038</td><td>FHz</td><td>Machine resonance suppression filter frequency</td><td>Hz</td><td>Set the resonance frequency to be suppressed. (Valid at 100 or more).
Set 0 when the filter is not to be used.</td><td>0 to 3000</td></tr>
<tr><td>SV039</td><td>LMCD</td><td>Lost motion compensation timing</td><td>msec</td><td>Set this when the lost motion compensation timing does not match. Adjust while increasing the value by 10 at a time.</td><td>0 to 2000</td></tr>
<tr><td>SV040</td><td>LMCT</td><td>Lost motion compensation non-sensitive band/fine torque compensation Cy</td><td>μm</td><td>The lost motion compensation non-sensitive band can be set only during feed forward control. Set in the low-order 8 bits.
The setting range is 0 to 100. When 0 is set, 2μm will be set.
Adjust the value in increments of 1μm.
Set the fine torque compensation Cy in the high-order 8 bits.
Normally, set 0. Set 255 to use this function.
The following will result when 5 is set as the lost motion compensation non-sensitive band, and 255 is set as the fine torque compensation Cy.
255 × 265 + 5 = 65285 65285 – 65536 = –251</td><td>–32768 to 32767</td></tr>
<tr><td>SV041</td><td>LMC2</td><td>Lost motion compensation 2</td><td>Stall % (rated current %)</td><td>Set 0 as a standard. Set this when the lost motion compensation amount is to be changed according to the direction.</td><td>–1 to 100</td></tr>
<tr><td>SV042</td><td>OVS2</td><td>Overshooting compensation 2</td><td>Stall % (rated current %)</td><td>Set 0 as a standard. Set this when the overshooting compensation amount is to be changed according to the direction.</td><td>–1 to 100</td></tr>
<tr><td>SV043</td><td>OBS1</td><td>Disturbance observer 1</td><td>rad/sec</td><td>Set the observer filter band (observer pole).
Set 600 as a standard, and lower the setting by 50 at a time if vibration occurs.</td><td>0 to 1000</td></tr>
<tr><td>SV044</td><td>OBS2</td><td>Disturbance observer 2</td><td>%</td><td>Set the observer gain
Set 100 to 300 as a standard, and lower the setting if vibration occurs.</td><td>0 to 1000</td></tr>
</table>

上正科技有限公司
購買、維修 此手冊零組件
電話： 037-466333
Email: service@repairtw.com
Line id: @zzzz
www.repairtw.com

(SV001) is a parameter validated when the CNC power is turned ON again.

No.	Abbrev.	Parameter name	Unit	Explanation	Setting range
SV045	TRUB	Collision detection function frictional torque/fine torque compensation	Stall % (Rated current %)	Set 0 as the standard. To use the collision detection function, set the frictional torque as a percentage of the stall rated current in the low-order 8 bits. (0 to 100) To use fine torque compensation, set approx. 10 to 30 in the high-order 8 bits. The following will result when 30 is set as the frictional torque, and 20 is set as the fine torque compensation. 30 + 20 × 256 = 5150	–32768 to 32767
SV046				Set "0".	0
SV047	EC	Inductive voltage compensation gain	%	Set 70% as a standard. Lower the gain if the current FB peak exceeds the current command peak.	0 to 200
SV048	EMGrt	Vertical axis drop prevention type	msec	Input the time to delay the ready OFF when an emergency stop occurs. Increase the setting by 100 msec at a time and set the value where the axis does not drop.	0 to 2000
SV049	PGN1sp	Position loop gain 1 during spindle synchronization	rad/sec	Set 15 as a standard. Set the same value as the position loop gain for the spindle synchronous control.	1 to 200
SV050	PGN2sp	Position loop gain 2 during spindle synchronization	rad/sec	Set 0 as a standard. Set the same value as the position loop gain for the spindle synchronous control.	0 to 999
SV051				Set "0".	0
SV052				Set "0".	0
SV053	OD3	Excessive error detection width during special operation	mm	Set 0 as a standard.	0
SV054				Set "0".	0
SV055				Set "0".	0
SV056	EMGt	Deceleration control time constant	msec	Set the time to stop from rapid traverse rate (rapid). Set the same value as the rapid traverse acceleration/deceleration time constant.	0 to 5000
SV057	SHGC	SHG control gain	rad/sec	Set 0 as a standard. When using SHG control, also set PGN1 and SHG2. (For SHG control)	0 to 999
SV058	SHGCsp	SHG control gain during spindle synchronization	rad/sec	Set 0 as a standard. Set the same value as the position loop gain for spindle synchronous control. (For SHG control)	0 to 999
SV059	TCNV	Collision detection function Estimated torque gain	%	Set this to use the collision detection function. After setting Sv035:SSF4/clt to 1 and carrying out acceleration/deceleration, set the value that appears at MPOF on the Servo Monitor screen.	0 to 5000
SV060	TLMT	Collision detection function G0 collision detection level	Stall % (Rated current %)	When using the collision detection function, set the collision detection level for method 1 Go feed. When 0 is set, all collision detection function will not activate.	0 to 200
SV061	DA1NO	D/A output channel 1 data No.		The data No. to be output to each D/A output channel is output.	0 to 102
SV062				Set 0.	0
SV063	DA1MPY	D/A output channel 1 output scale	1/256	When “0” is set, the output will be made with the standard output unit. To change the output unit, set a value other than 0. The scale is set with a 1/256 unit. When 256 is set, the unit will be the same as the standard output unit.	–32768 to 32767
SV064				Set 0.	0

SV001 is a parameter validated when the CNC power is turned ON again.

上正科技有限公司
購買、維修 此手冊零組件
電話： 037-466333
Email: service@repairtw.com
Line id: @zzzz
www.repairtw.com

Chapter 9 Inspections

9-1 Inspections 9-2
9-2 Life parts 9-2
9-3 Replacing the unit 9-3
9-3-1 HS-MF23** type 9-3
9-3-2 HS-FR43/73, HS-SF52/53/102/103 type 9-3
9-3-3 HS-SF202 type 9-4

上正科技有限公司
購買、維修 此手冊零組件
電話： 037-466333
Email: service@repairtw.com
Line id: @zzzz
www.repairtw.com

DANGER	1. Wait at least 10 minutes after turning the power OFF and check that the input/output and voltage are zero with a tester, etc., before starting wiring or inspections. Failure to observe this could lead to electric shocks. 2. Only qualified persons must carry out the inspections. Failure to observe this could lead to electric shocks. Contact your dealer for repairs or part replacements.
CAUTION	3. Do not perform a megger test (insulation resistance measurement) on the servo amplifier. Failure to observe this could lead to faults. 4. Never disassemble or modify the unit.

9-1 Inspections

Periodically inspecting the following points is recommended.

(1) Are any screws on the terminal block loose? Tighten if loose.
(2) Is the connector loose?
(3) Is there any abnormal noise from the servomotor bearings or the brakes?
(4) Are any of the cables damaged or cracked? If the cable moves with the machine, carry out a periodic inspection according to the usage conditions.
(5) Is the axis at the load coupling section misaligned?

9-2 Life parts

上正科技有限公司
購買 維修 此手冊零組件
電話： 037-466333
Email: service@repairtw.com
Line id: @zzzz
www.repairtw.com

The guidelines for the part replacement interval are as shown below. These will differ according to the usage methods and environmental conditions, of if an abnormality is found, the part must be replaced.

Part name		Standard replacement time	Remarks
Battery unit MDS-A-BT-2 MDS-A-BT-4 MDS-A-BT-6 MDS-A-BT-8		Seven years	The standard replacement time is a reference time. If an abnormality is found before the standard replacement time is reached, the part must be replaced.
Servomotor	Bearings	20,000 to 30,000 hours	
	Oil seal	5,000 hours	

(1) Servomotor bearings : When used at the rated speed and rated load, replace the bearings after about 20,000 to 30,000 hours. This will differ according to the operation state, but if abnormal noise or vibration is found during the inspection, the bearings must be replaced.

(2) Servomotor oil seal, V-ring : These parts must be replaced after about 5,000 hours of operation at the rated speed. This will differ according to the operation state, but these parts must be replaced if oil leaks, etc., are found during the inspection.

9-3 Replacing the unit

9-3-1 HS-MF23** type

With the HS-MF2** type, the amplifier/encoder section and motor section cannot be separated. The motor and amplifier must be replaced together.

9-3-2 HS-FR43/73, HS-SF52/53/102/103 type

With the HS-FR43/73, HS-SF52/53/102/103 types, the amplifier and encoder section can be separated from the motor section. The procedures for replacing the amplifier and encoder section are shown below.

(1) Removing the amplifier and encoder unit.

1) Wait at least 10 minutes after turning the power OFF, and then remove the connector.
2) Remove the four hexagon socket bolts installing the amplifier and encoder unit.
3) Pull the amplifier and encoder unit out from the back.
4) Disconnect the connector connecting the motor and amplifier. If brakes are provided, also disconnect the brake connector.

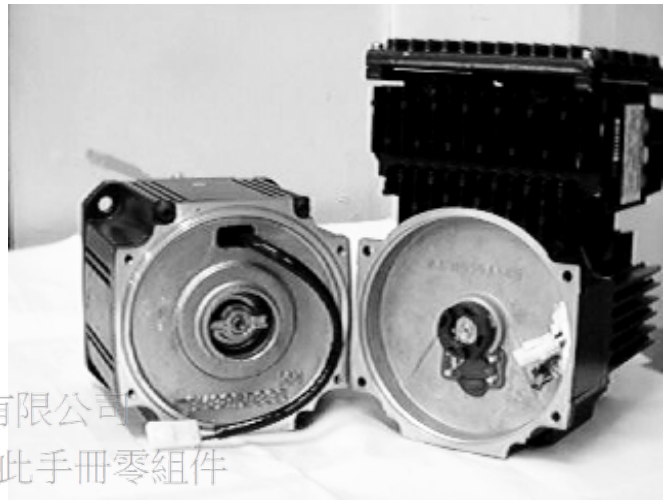

上作科技有限公司
購買、維修 此手冊零組件
電話： 037-466333
Email: service@repairtw.com
Email: @zzz
http://www.repairtw.com

(2) Installing the amplifier and encoder unit

5) Replace the O-ring. (If the motor has been used, the O-ring may be expanded because of oil, etc. Thus, always replace the O-ring when replacing the amplifier.)
6) The motor leads are curled when delivered. If they are uncurled, curl them again.
7) Connect the connector connecting the motor and amplifier. If brakes are provided, also connect the brake connector.
8) Align the Oldham's coupling on the encoder side with the hub on the motor side.
9) Assemble the motor with the amplifier and encoder unit while taking care to not catch the leads.
10) Fix with four hexagon socket bolts.

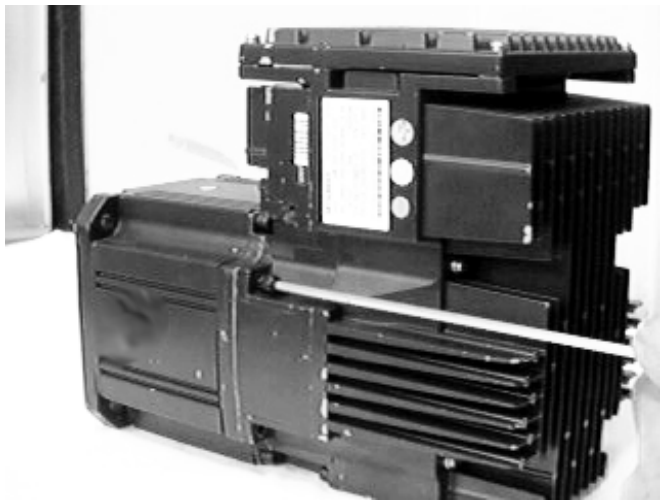

9-3-3 HS-SF202 type

With the HS-SF202 type, the amplifier section, encoder section and motor can be separated. The procedures for replacing the amplifier section and encoder section are shown below.

(1) Removing the amplifier unit

1) Wait at least 10 minutes after turning the power OFF, and then remove the connector.
2) Remove the four hexagon socket bolts installing the amplifier and encoder unit.
3) Pull the amplifier unit out from the back.
4) Disconnect the connector connecting the encoder and amplifier.
5) Disconnect the connector connecting the motor and amplifier.

(2) Removing the encoder

6) Remove the four pan-head screws, and remove the encoder.

(3) Installing the encoder.

7) Align the Oldham's coupling on the encoder side with the hub on the motor side.
8) Install the encoder onto the motor, and tighten the four screws. Set the encoder installation angle as shown in the upper right photograph.

(4) Installing the amplifier unit.

9) Replace the O-ring. (If the motor has been used, the O-ring may be expanded because of oil, etc. Thus, always replace the O-ring when replacing the amplifier.)
10) The motor leads are curled when delivered. If they are uncurled, curl them again.
11) Connect the connector between the encoder and amplifier.
12) Connect the connector between the motor and amplifier.
13) Assemble the motor and amplifier unit so that the motor lead wraps half way around the encoder periphery and the encoder lead fits in at a position opposite the motor lead. (Refer to lower right photograph.) Take special care to prevent the wires from catching.
14) Fix with the four hexagon socket bolts.

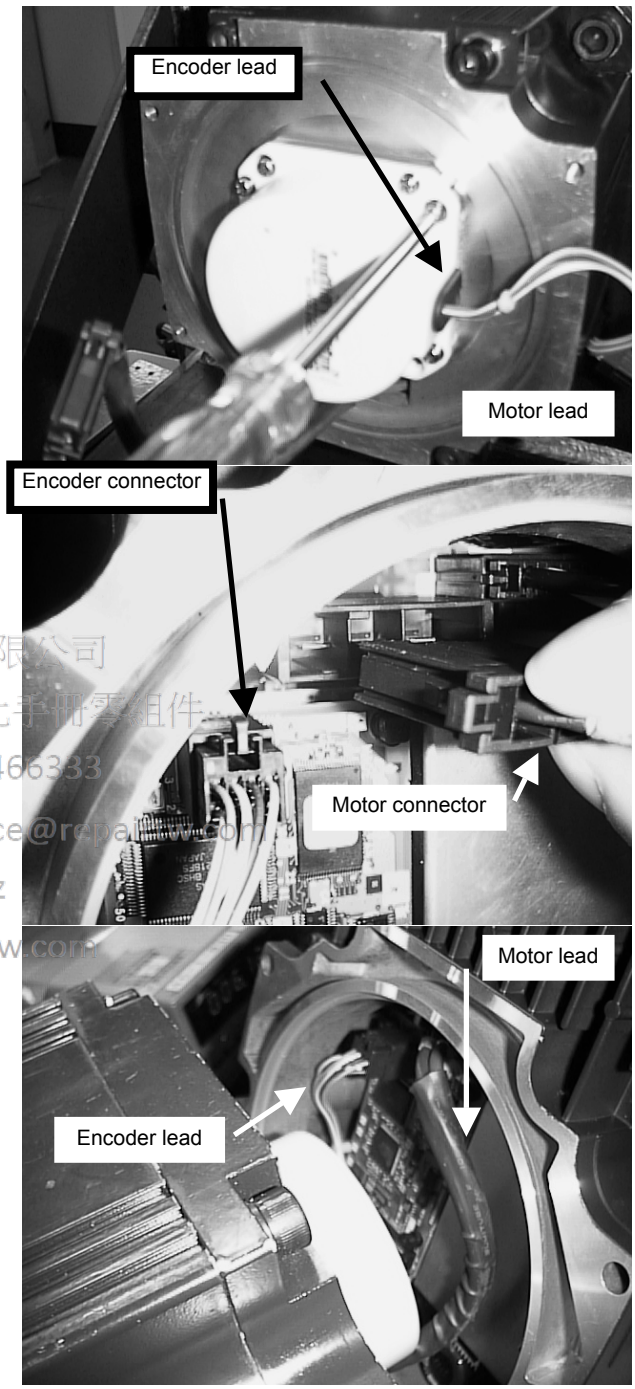

上正科技有限公司
維修 此手冊零組件
電話： 037-466333
Email: service@repairtw.com
Line id: @zzzz
www.repairtw.com

Chapter 10 Troubleshooting

10-1 Points of caution and confirmation 10-2
10-2 Troubleshooting at start up 10-2
10-3 Protective functions list 10-3
10-3-1 Alarm 10-3
10-3-2 Warnings list 10-7
10-3-3 Alarm and warning deceleration method and reset method 10-8

上正科技有限公司
購買、維修 此手冊零組件
電話： 037-466333
Email: service@repairtw.com
Line id: @zzzz
www.repairtw.com

10-1 Points of caution and confirmation

A servo warning or servo alarm occurs if there is an abnormal state in the servo system or if an error occurs. When a servo warning or alarm occurs, check the state while observing the following points, and inspect or remedy the unit according to the details given in this section.

<Points of confirmation>

1. What is the alarm code display?
2. Can the error or trouble be repeated? (Check alarm history)
3. Is the motor and servo amplifier temperature and ambient temperature normal?
4. Are the servo driver, control unit and motor grounded?
5. Was the unit accelerating, decelerating or running at a set speed? What was the speed?
6. Is there any difference during forward and backward run?
7. Was there a momentary power failure?
8. Did the trouble occur during a specific operation or command?
9. At what frequency does the trouble occur?
10. Is a load applied or removed?
11. Has the amplifier unit been replaced, parts replaced or emergency measures taken?
12. How many years has the unit been operating?
13. Is the power voltage normal? Does the state change greatly according to the time band?

⚠ CAUTION

1. This servo amplifier uses a large capacity electrolytic capacitor. When the CHARGE lamp on the front of the driver is lit, there is still a voltage in the unit. Take care to prevent electric shocks and short circuits. (The voltage will remain for several minutes after the power is turned OFF.)
2. The conductivity in the amplifier cannot be checked due to the structure.
3. Do not carry out a megger test as the amplifier could be damaged.

上正科技有限公司
購買、維修 此手冊零組件
電話： 037-466333
Email: service@repairtw.com
Line id: @zzzz
www.repairtw.com

10-2 Troubleshooting at start up

If the CNC system does not start up correctly and a system error occurs when the CNC power is turned ON, the servo amplifier may not have been started up correctly.

Cause of occurrence	Investigation method	Remedy
The amplifier axis No. setting is incorrect.	Is there another amplifier (servo/spindle) set to the same axis No.? Check the rotary switch setting.	Set correctly.
	Is the connection to the I/F unit correct?	Connect correctly.
	Is the I/F unit DIP switch OFF (D/A output state for adjustment)?	Turn ON.
The CNC setting is incorrect.	Is the No. of CNC controlled axes correct?	Set correctly.
Communication with CNC is incorrect.	Is the I/F unit connector disconnected?	Connect correctly.
	Is the cable broken? Check the conductivity with a tester.	Replace the cable.
The I/F unit does not operate	Is the I/F unit power being supplied?	Connect correctly.
I/F unit trouble	Check the repeatability.	Replace the I/F unit
NC trouble	Check the repeatability.	Replace the NC
The amplifier does not operate	Is the 200VAC power being supplied correctly?	Connect correctly.
Amplifier fault	Check the repeatability.	Replace the amplifier.

10-3 Protective functions list

10-3-1 Alarm

When an alarm occurs, the motor will stop by the deceleration control or dynamic brakes. At the same time, the alarm No. will appear on the CNC monitor screen. Check the alarm No., and remove the cause of the alarm by following this list.

No.	Name	Details	Cause of occurrence	Investigation method	Remedy
10	Undervoltage	The PN bus wire voltage is 200 V or less.	Contactor operation, conductivity defect	Check the contactor operation, check the conductivity.	Replace the contactor.
				Check the output from the amplifier. • Is connector (CN3) disconnected? • Is the cable broken?	Connect correctly. Replace the cable.
				Check the contactor drive relay operation, and for conductivity defects.	Replace the relay.
			Power supply wire breakage of undervoltage	Check the input voltage. • Is a single-phase 200 V or 100 V input? • Is there an open phase?	Input 3-phase 200 V.
				Check the power capacity.	Review the power supply.
13	Software processing error	Software operation sequence error or operation timing error	CPU peripheral circuit error	Check the repeatability.	Replace the amplifier.
				Check the grounding state and ambient temperature.	Improve the ambient environment.
17	A/D converter error	The A/D converter conversion value is incorrect.	CPU peripheral circuit error	Check the repeatability.	Replace the amplifier.
				Check the grounding state and ambient temperature.	Improve the ambient environment.
18	Detector, initial communication error	Initial communication with the detector was not possible.	Detector peripheral circuit fault	Check the repeatability.	Replace the detector (amplifier).
				Check the grounding state and ambient temperature.	Improve the ambient environment.
			The connection between the detector and amplifier is disconnected. (SF202)	Remove the amplifier section, and check the connector (CN2) connection.	Reconnect. (Refer to section 9-3-3 for the method.)
22	LSI error	LSI operation error	LSI operation error	Check the repeatability.	Replace the amplifier.
				Check the grounding state and ambient temperature.	Improve the ambient environment.
24	Ground fault	A motor cable ground fault was detected. (Detected only at instant of ready ON.)	Motor drive cable ground fault Motor fault	Check whether the motor cable is caught. Check the motor insulation.	Replace the motor.
			Amplifier fault		Replace the amplifier.
			Motor fault		Replace the motor.
25	Absolute position data lost	The absolute position in the detector was lost.	Battery voltage drop	Check the battery voltage with a test. (Occurs at 3 V or less)	Replace the battery
			Battery line in communication cable is broken.	Check the conductivity with a tester.	Replace the cable.
			The cable was disconnected when the power was turned OFF.	After alarm 18 occurred, correctly connect the cable and turn the power ON again.	Turn the power ON again.
2B	Detector, CPU error	Detector internal circuit error	Detector fault	Check the repeatability.	Replace the detector (amplifier).
				Check the ambient environment.	Review the ambient environment.
2C	Detector, LED error	The LED in the detector has deteriorated.	Detector fault (life)	Check the repeatability.	Replace the detector (amplifier).
				Check the ambient environment.	Review the ambient environment.
2D	Detector, data error	Detector position data error	Detector fault	Check the repeatability.	Replace the detector (amplifier).
				Check the ambient environment.	Review the ambient environment.

上正科技有限公司
購買 維修 此手冊零組件
電話： 037-466333
E-mail: service@repairtw.com
Line id: @zzzz
www.repairtw.com

No.	Name	Details	Cause of occurrence	Investigation method	Remedy
2F	Detector, communication error	Communication with the detector was cut off or there was an error in the received data.	Detector peripheral circuit fault	Check the repeatability.	Replace the detector (amplifier).
				Check the grounding state and ambient temperature.	Improve the ambient environment.
			The connection between the detector and amplifier is disconnected. (SF202)	Remove the amplifier section, and check the connector (CN2) connection.	Reconnect. (Refer to section 9-3-3 for the method.)
30	Over-regeneration	Overheating of the regenerative resistor was detected.	The regeneration frequency is too high.	Check the regeneration capacity.	Lower the regeneration frequency.
			The power voltage is high. (253V or more)	Occurs at ready OFF. Check the power voltage with a tester.	Review the power supply.
31	Overspeed	The motor speed exceeded the tolerable value.	The axis specification parameter (rapid) setting is incorrect.	Check the machine specifications.	Set correctly.
			The servo parameter setting is incorrect.	Check SV001 (PC1), SV002 (PC2), SV018 (PIT), SV025 (MTYP).	Set correctly.
			The speed is overshooting.	Is the speed loop gain too low?	Adjust the gain.
				Is the current limit value too low?	Adjust the limit value.
			Detector fault	Does the alarm occur when the power is turned ON? Change with another axis and check the repeatability.	Replace the detector (amplifier).
32	Power module overcurrent	The power module overcurrent protection function activated.	Amplifier fault	Replace the amplifier with one for another axis, and check the repeatability.	Replace the amplifier.
			Motor fault		Replace the motor.
33	Overvoltage	The PN bus wire voltage exceeded 400 V.	The power voltage is high. (280V or more)	Occurs at ready ON. Check the power voltage with a tester.	Review the power supply.
			Broken wire in the regenerative resistor.		Replace the amplifier.
			The regeneration capacity is large for the HS-MF23.	Check the load inertia. Refer to section 11-4-1.	Lower the speed. Change to another amplifier or motor series.
34	CNC communication, CRC error	There was an error in the communication data from the CNC.	The communication cable is broken.	Check the conductivity with a tester.	Replace the cable.
			The communication cable connection is incorrect.	Are the communication pair cables connected in reverse?	
			The communication cable shield is disconnected or dislocated.	Check the continuity. Open the cable connector section, and visually check.	Remedy correctly.
			The terminator is faulty.	Is the terminator dislocated?	Check the connection.
				Replace the terminator.	Replace the connector.
			Battery unit fault	Is the battery unit dislocated?	Check the connection.
				Try replacing the battery unit.	Replace the battery unit.
			The grounding is incomplete.	Check the grounding state.	Correctly ground.
			Noise	Check the ambient environment.	Improve the noise source. Clamp the shield.
			Amplifier fault	Change the connection with that for another amplifier and find the cause.	Replace the amplifier.
			I/F unit fault		Replace the I/F unit.
			CNC unit fault		Replace the CNC unit.
35	CNC communication, data error	The movement command data sent from the CNC was excessive.	Not within amplifier specifications.	Is this a sub-micron system? Is the axis a rotary axis?	Consult with Mitsubishi.

上正科技有限公司
購買、維修 此手冊零組件
電話： 037-466333
Email: service@repairtw.com
Line id: @zzzz
www.repairtw.com

No.	Name	Details	Cause of occurrence	Investigation method	Remedy
36	CNC communication, transmission error	The communication from the CNC was cut off.	The communication cable is disconnected.	Check the connector (CN1A, CN1B). (Including the other axes)	Set correctly.
			The communication cable is broken.	Check the conductivity with a tester.	Replace the cable.
37	Initial parameter error	The servo parameter setting is incorrect. Check the error parameter No. If there are several error parameters, the most recent No. is output.	The parameter is not within the setting range.	Check the setting range of the parameter having the error NO.	Set correctly.
			The HEX setting parameter setting is incorrect.	SV025: A non-entered motor type was selected. SV027: Imc 1 and 2 were set.	Set correctly.
			The electronic gears' constant is overflowing.	The error No. is 101 (2301). Check parameters SV001, SV002 and SV018.	If the settings are OK, consult with Mitsubishi.
			The SHG control option setting is not provided.	The error No. is 104 (2304). Check parameters SV057 and SV058.	Set correctly.
38	CNC communication, protocol error 1	There was an error in the communication data from the CNC.	The communication cable is broken.	Check the conductivity with a tester.	Replace the cable.
			The communication cable connection is incorrect.	Are the communication pair cables connected in reverse?	
			The grounding is incomplete.	Check the grounding state.	Correctly ground.
			Amplifier fault	Change the connection with that for another amplifier and find the cause.	Replace the amplifier.
			CNC unit fault		Replace the CNC unit.
39	CNC communication, protocol error 2	There was an error in the communication data from the CNC.	The communication cable is broken.	Check the conductivity with a tester.	Replace the cable
			The communication cable connection is incorrect.	Are the communication pair cables connected in reverse?	
			The grounding is incomplete.	Check the grounding state.	Correctly ground.
			Amplifier fault.	Change the connection with that for another amplifier and find the cause.	Replace the amplifier.
			CNC unit fault.		Replace the CNC unit.
3A	Overcurrent	The motor drive current is excessive.	The speed loop gain (VGN1) is excessive.	Is VGN1 higher than the standard value in respect to the load inertia?	Lower VGN1.
				Is vibration occurring?	
			The current loop gain setting is incorrect.	Check the current loop gain.	Set the standard value.
			Amplifier and detector fault	Check the repeatability.	Replace the amplifier and the detector.
3C	Regenerative circuit error	An error was detected in the regenerative transistor or resistor.	Regenerative resistor error	Check the repeatability	Replace the amplifier.
			The regenerative transistor is damaged by a short circuit.		
46	Motor overheat	Overheating of the motor was detected.	The ambient temperature is high.	Check the ambient temperature.	Improve the ambient environment.
			The motor load is large.	Has the overload alarm (50) cut off the amplifier power and caused a forced reset?	Review the operation pattern.
				Is the load too large?	
4F	Instantaneous stop	The power was cut off for 50 msec or more.	The power supply connection is poor.	Is the connector or connection disconnected?	Connect correctly.
			The power supply state is poor.	Is the weather OK? (Has lightning occurred?)	Review the power supply.
				When using overseas, there are cases when the power supply is poor.	
50	Overload 1	An excessive load was applied for longer than the set time.	The motor capacity is insufficient.	Review the motor capacity selection.	Change the motor or amplifier capacity.
			The brakes cannot be released.	Check the brake operation. • Check the brake relay.	Repair the faulty section.
			An excessive force is being applied from the machine.	Check the load current on the CNC servo monitor and find the machine load. Is the ball screw bent?	Replace the faulty section in the machine.
				Is there interference with the positioning pin?	Do not use positioning pins.
			The parameter setting is incorrect.	Are SV021 and SV022 set to the standard values?	Set the standard values.

上海科技有限公司
購買 維修 此手冊零組件
電話： 037-466333
Email: service@repairtw.com
Line id: @zzzz
www.repairtw.com

No.	Name	Details	Cause of occurrence	Investigation method	Remedy
51	Overload 2	An excessive load was applied for longer than the set time.	The machine was collided with.	Visually check whether there was a collision with the machine.	Check the cause of the collision.
				Is there interference with the positioning pin?	Do not use positioning pins.
			Amplifier detector fault.	Check the repeatability.	Replace the amplifier detector.
52	Excessive error 1	The actual motor position and model position difference was excessive at servo ON.	The speed loop gain (VGN1) is small.	Is the motor speed fluctuating?	Adjust the gain.
			The motor load is too large.	Is the acceleration/deceleration time constant too short?	Adjust the parameters.
				The current limit value is too low and a sufficient torque is not output.	
				The motor brakes cannot be released?	Repair the brake circuit.
			The excessive error detection width is too small.	Check the SV023 (SV053) setting value.	Adjust the parameters.
			The input voltage is low.	Is the input voltage 170V or less, or near 170V? Is the input voltage unstable?	Check the power supply. Increase the acceleration/deceleration time constant.
			Detector and amplifier fault	Change with another axis and check the repeatability.	Replace the detector and the amplifier.
53	Excessive error 2	The actual motor position and model position difference was excessive at servo OFF.	The excessive error detection width is too small.	Check the VS026 setting value.	Adjust the parameter.
			The CNC has stopped the follow up function.	Check the CNC parameters.	
54	Excessive error 3	At servo ON, the difference of the actual motor position and the model position was excessive.	Refer to AL52.		
58	Collision detection 1: G0	The collision detection function activated during rapid traverse.	The machine collided.	Is there any collision or interference at the machine end?	Remove the cause of the collision.
			The machine load is heavy.	Check the relation of the parameters and machine load. sv032: Torque offset sv045: Frictional torque sv059: Estimated torque gain	Reset the parameters, or correct the abnormal machine state.
			The collision detection level is small.	Is the value set in consideration of the machine and motor variation? sv060	Adjust the parameter.
59	Collision detection 1: G2	The collision detection function activated during cutting feed.	Refer to section AL58.		
			The cutting load is heavy.	Check whether cutting is being carried out correctly, and whether the byte is chipped.	Repair the abnormal section.
			The cutting load is heavy.	Raise the collision detection level for cutting feed. sv035.	Adjust the parameter.
5A	Collision detection 2	The current command reached the maximum capacity of the driver.	The machine collided.	Is there any collision or interference at the machine end?	Remove the cause of the collision.
			The machine load is heavy.	Is there any abnormal section in the machine?	Repair the abnormal section.
			The acceleration/ deceleration time constant is short.	Check the acceleration/deceleration torque. If there is no allowance to the acceleration/deceleration torque in respect to the motor torque: 1. Lengthen the acceleration/deceleration time constant. 2. Set sv035:cl2n to 1.	Adjust the parameter.
88	Watch dog	The amplifier system did not operate correctly.	Amplifier fault	Check the repeatability.	Replace the amplifier.
			The grounding is incomplete.	Check the grounding state.	Ground correctly.

上詮科技有限公司
購買維修此手冊零組件
電話： 037-466333
Email: service@repairtw.com
Line id: @zzz
www.repairtw.com

10-3-2 Warnings list

When a warning occurs, a warning No. will appear on the CNC monitor screen and with the LEDs on the front of the amplifier. Check the warning No., and remove the cause of the warning by following this list.

No.	Name	Details	Cause of occurrence	Investigation method	Remedy
93	Initial absolute value fluctuation	The position data fluctuated when creating the initial absolute position.	The vertical axis or slant axis dropped when the CNC power was turned ON.	Check the state of the axis when the CNC power was turned ON.	Repair the fault section.
			The axis moved due to an external force when the CNC power was turned ON.		
9E	Detector, multi-rotation counter error	There was an error in the data of the multi-rotation counter in the detector.	Detector fault	Check the repeatability.	Replace the detector (amplifier).
9F	Battery voltage drop	The battery voltage dropped.	Battery life	The battery life is approx. 5 years. (This will change according to the usage state.)	Replace the battery.
			The battery connector (in the amplifier) is disconnected.	Open the panel at the top of the amplifier and check.	Connect correctly.
			The battery line in the detector cable is broken.	Check the conductivity with a tester.	Replace the cable.
E0	Over-regeneration warning	The regeneration level reached 80% or more.	Refer to the over-regeneration (30) column.		
E1	Overload warning	The load level reached 80% or more.	Refer to the overload (50) column.		
E3	Absolute position counter warning	A deviation was detected in the absolute position data and relative position data	There is an error in the detector's multi-rotation data	Check the movement of the multi-rotation data (Rn) from the CNC monitor screen.	Replace the detector (amplifier).
E4	Parameter error warning	A parameter exceeding the setting range was set.	The parameter setting range is not within the range.	Check the parameter setting conditions.	Set correctly.
E7	CNC emergency stop	Emergency stop was input from the NC (Status display)	The CNC emergency stop has been input.	The CNC emergency stop has been input correctly.	
			An alarm is occurring with another axis.	Has an alarm occurred with another axis?	Reset the alarm in the other axis to cancel this warning.
			The terminator or battery unit connector is disconnected.	Check the connection of the CNC communication line cable (CN1A, CN1B).	Set correctly.
E9	Instantaneous stop warning	The power was cut off for 25 msec or more but 50 msec or less.	Refer to the instantaneous stop (4F) column.		

上正科技有限公司
購買維修此手冊零缺件
電話： 037-466333
Email: service@repairtw.com
Line id: @zzzz
www.repairtw.com

10-3-3 Alarm and warning deceleration method and reset method

No.	Name	Deceleration method	Reset method	Explanation
10	Undervoltage	Deceleration control	PR	When the power is cut off, the dynamic brakes may be switched to.
13	Software processing error	Dynamic	PR	
17	A/D converter error	Dynamic	PR	
18	Detector, initial communication error	Initial error	PR	
22	LSI error	Dynamic	AR	
24	Ground fault	Dynamic	PR	
25	Absolute position data lost	Initial error	AR	
2B	Detector, CPU error	Initial error	AR	
2C	Detector, LED error	Deceleration control	PR	
2D	Detector, data error	Dynamic	PR	
2F	Detector, communication error	Dynamic	PR	
30	Over-regeneration	Deceleration control	PR	PR reset is not possible when the regeneration level is 50% or more. Do not reset (AR) forcibly by turning off the amplifier. If AR is carried out at 50% or more, 80% will be set the next time the power is turned ON.
31	Overspeed	Deceleration control	PR	
32	Power module overcurrent	Dynamic	PR	
33	Overvoltage	Dynamic	PR	
34	CNC communication, CRC error	Deceleration control	PR	
35	CNC communication, data error	Deceleration control	PR	
36	CNC communication, transmission error	Deceleration control	PR	
37	Initial parameter error	Initial error	PR	
38	CNC communication, protocol error 1	Deceleration control	PR	
39	CNC communication, protocol error 2	Deceleration control	PR	
3A	Overcurrent	Dynamic	PR	
3C	Regeneration circuit error	Dynamic	AR	
46	Motor overheat	Deceleration control	NR	NR and PR reset cannot be carried out when the motor is overheated.
4F	Instantaneous stop	Deceleration control	NR	
50	Overload 1	Deceleration control	NR	NR and PR reset is not possible when the load level is 50% or more. Do not reset (AR) forcibly by turning off the amplifier. If AR is carried out at 50% or more, 80% will be set the next time the power is turned ON.
51	Overload 2	Dynamic	NR	
52	Excessive error 1	Deceleration control	NR	A step stop is carried out in deceleration control. The deceleration control time constant is meaningless. (C1 and subsequent versions. The dynamic method is fixed in the C0 version.)
53	Excessive error 2	Dynamic	NR	
54	Excessive error 3	Dynamic	NR	
58	Collision detection method 1, G0	Deceleration control	NR	After the collision is detected, the machine will decelerate to a stop at 80% of the motor's maximum torque.
59	Collision detection method 1, G1	Deceleration control	NR	
5A	Collision detection method 2	Deceleration control	NR	
88	Watch dog	Dynamic	AR	

上正科技有限公司
購買、維修 此手冊零組件
電話： 037-466333
Email: service@repairtw.com
Line Id: @zzzz
www.repairtw.com

No.	Name	Deceleration method	Reset method	Explanation
93	Initial absolute position fluctuation	The motor will not stop.	PR	
9E	Detector, multi-rotation counter error		*	
9F	Battery voltage drop		*	
E0	Over-regeneration warning		*	
E1	Overload warning		*	
E3	Absolute position counter warning		*	
E4	Parameter error warning		*	
E7	CNC emergency stop	Deceleration control	*	
E9	Instantaneous stop warning	The motor will not stop.	NR	When the instantaneous warning occur, use NR reset. The state will also be reset automatically after 5 minutes.

• Deceleration method

Deceleration control : The motor will be decelerated and controlled with the time constant set in the parameter (EMGt).
If dynamic brake stop is selected with the parameter (SPEC), the motor will stop with the dynamic brakes.

Dynamic : The motor will stop with the dynamic brakes.

• Reset method

* : The unit will be automatically reset when the state in which the warning occurred is canceled.
NR : Reset with the CNC reset button. Resetting is also possible with the PR, AR resetting conditions.
PR : Reset by turning the CNC power ON again. Resetting is also possible with the AR resetting conditions.
AR : Reset by turning the servo amplifier power ON again.

上正科技有限公司
購買、維修 此手冊零組件
電話： 037-466333
Email: service@repairtw.com
Line id: @zzzz
www.repairtw.com

Chapter 11 Selection

11-1 Outline 11-2
11-1-1 Servomotor 11-2
11-1-2 Regeneration methods 11-3
11-2 Selection of servomotor series 11-4
11-2-1 Motor series characteristics 11-4
11-2-2 Servomotor precision 11-4
11-3 Selection of servomotor capacity 11-6
11-3-1 Load inertia ratio 11-6
11-3-2 Short time characteristics 11-6
11-3-3 Continuous characteristics 11-7
11-4 Selection of regenerative resistor 11-9
11-4-1 Limits for HS-MF23 11-9
11-4-2 Approximate calculation of positioning frequency 11-9
11-4-3 Calculation of regenerative energy 11-9
11-4-4 Calculation of positioning frequency 11-11
11-5 Motor shaft conversion load torque 11-12
11-6 Expressions for load inertia calculation 11-13

上正科技有限公司
購買、維修 此手冊零組件
電話： 037-466333
Email: service@repairtw.com
Line Id: @zzzz
www.repairtw.com

11-1 Outline

11-1-1 Servomotor

There are limits to the lineup of the intelligent servomotor. As the regenerative resistor is fixed to the built-in type, the repeated positioning frequency is limited.
If the servomotor does not comply with the following items, use the MDS-B-V1/V2/SVJ2 servo drive unit and HA/HC Series servomotor.

(1) Motor inertia

The servomotor series is mainly categorized according to the motor inertia size. The features in Table 11-1 are provided according to the motor inertia size.

Table 11-1 Motor inertia

Motor model	Medium inertia motor	Low inertia motor
Motor type	HS-SF	HS-RF, HS-MF
Inertia	The flange size is large. The inertia is comparatively large.	The flange size is small. The inertia is small.
Acceleration/deceleration	The acceleration/deceleration time constant does not change much even for a low inertia load. The effect of the motor inertia is large.	Acceleration/deceleration is possible with a short time constant in respect to low inertia loads. The effect of the motor inertia is small.
Installation	The motor size in respect to the output capacity is large, and the installation space is large.	The motor size in respect to the output capacity is small, and the installation space is smaller.
Disturbance characteristics	The effect of disturbance is small.	The effect of disturbance is large.
Speed fluctuation	The effect of the torque ripple is small, and speed fluctuation does not occur easily.	The effect of the torque ripple is large, and speed fluctuation occurs easily.
Suitability	Suitable for high precision interpolation control	Suitable for high speed positioning

www.repairtw.com

Select a medium inertia motor when interpolation precision is required, or for machines having a large load inertia. Select a low inertia motor when a shorter positioning time is required by machines having a small amount of inertia. Normally use the HS-SF motor for the machine tool feed axis. Consult with Mitsubishi when using a low-inertia motor for the feed axis.
The servomotor has an optimum load inertia scale. If the load inertia exceeds the optimum range, the control becomes unstable and the servo parameters become difficult to adjust. When the load inertia is too large, decelerate with the gears (The motor axis conversion load inertia is proportional to the square of the deceleration ratio.), or change to a motor with a large inertia.

(2) Rated speed

Even with motors having the same capacity, the rated speed will differ according to the motor. The motor's rated output is designed to be generated at the rated speed, and the output P (W) is expressed with expression (11-1). Thus, even when the motors have the same capacity, the rated torque will differ according to the rated speed.

$$P = 2\pi \frac{N}{60} \tau \quad (W) \qquad \text{..... (11-1)}$$

N : Motor speed (r/min)
T : Output torque (N·m)

In other words, even with motors having the same capacities, the one with the lower rated speed will generate a larger torque. When actually mounted on the machine, if the positioning distance is short and the motor cannot reach the maximum speed, the motor with the lower rated speed will have a shorter positioning time. When selecting the motor, consider the axis stroke and usage methods, and select the motor with the optimum rated speed.

11-1-2 Regeneration methods

When the servomotor decelerates, rotating load inertia or the operation energy of the moving object is returned to the servo amplifier through the servomotor as electrical power. This is called "regeneration". The three general methods of processing regeneration energy are shown below.

Table 11-2 Servo amplifier regeneration methods

Regeneration method	Explanation
1. Condenser regeneration method	This is a regeneration method for small-capacity amplifiers. The regeneration energy is charged to the condenser in the amplifier, and this energy is used during the next acceleration. The regeneration capacity decreases as the power supply voltage becomes higher.
2. Resistance regeneration method	If the condenser voltage rises too high when regenerating with the condenser only, the regenerative electrical power is consumed using the resistance. If the regeneration energy is small, it will only be charged to the condenser. Because regeneration energy becomes heat due to resistance, heat radiation must be considered. In large capacity servo amplifiers the regenerative resistance becomes large and this is not practical.
3. Power supply regeneration method	This is a method to return the regeneration energy to the power supply. The regeneration energy does not become heat as in regenerative resistance. (Heat is generated due to regeneration efficiency problems.) The circuit becomes complicated, but in large capacity servo amplifiers having large regeneration capacity this method is more advantageous than resistance regeneration.

上正科技有限公司
購買、維修 此手冊零組件
電話： 037-466333
Email: service@repairtw.com
Line id: @zzzz
www.repairtw.com

The intelligent servomotor uses the capacity regeneration method and resistor regeneration method. The motors other than the HS-F23 are provided with the regenerative resistor. With the normal amplifier, if the regenerative capacity increases, the optional regenerative resistor is connected outside of the amplifier. However, with the intelligent servomotor, the optional regenerative resistor cannot be connected.
If the regeneration frequency exceeds the specifications, consider using the MDS-B-SVJ2, or the power regeneration type MDS-B-V1/V2 + MDS-B-CV Series.

POINT The HS-MF23EX uses capacitor regeneration. The regenerative resistor is not provided.

11-2 Selection of servomotor series

11-2-1 Motor series characteristics

The servomotor series is categorized according to purpose, motor inertia size, and detector resolution. Select the motor series that matches the purpose of the machine to be installed.

Table 11-3 Motor series characteristics

Motor series	Capacity (rated speed)	Detector resolution	Characteristics
HS-SF	0.5 to 2.0kW (2000r/min) 0.5 to 1.0kW (3000r/min)	100000p/rev	This is a motor for NC unit machine tool feed axes. It has smooth torque characteristics and is compatible to high resolution detectors.
HS-RF	0.4kW and 0.75kW (3000r/min)	100000p/rev	This is a low-inertia motor. It is compactly designed with a high output, and is suitable for light load high-speed drive such as for a loader.
HS-MF	0.2kW (3000r/min)	8000p/rev	This is a motor for ultra-low inertia machine tool peripheral axes. It is suitable for ultra-high speed positioning of light loads such as high speed arms and machine end sections. A molded structure using high heat conducting resin is utilized to realize a high output motor with a compact design. The motor characteristics can be realized even further and the positioning time shortened by making the load inertia ratio smaller. This motor can also be used with the servo amplifier MR-J2-CT for miscellaneous axes.

上正科技有限公司
購買、維修 此手冊零組件
電話： 037-466333
Email service@repairtw.com
Line Id: @2222
www.repairtw.com

11-2-2 Servomotor precision

The control precision of the servomotor is determined by the detector resolution, motor characteristics and parameter adjustment. This section examines the following four types of servomotor control precision when the servo parameters are adjusted. When selecting a servo, confirm that these types of precision satisfy the machine specifications before determining the servomotor series.

(1) Theoretic precision: Δε

This value is determined by the motor detector precision, and is the value obtained by dividing the movement amount (ΔS) per motor rotation by the detector resolution (RNG).

(2) Positioning precision : Δεp

This is the precision outline that affects the machine targeted for positioning, and expresses the machine's positioning precision.
When the motor is a single unit, this is determined by the detector resolution and matches with the theoretic precision Δεp. When the motor is actually installed on a machine, the positioning precision Δεp becomes 1 to 2 times the theoretic precision Δε. This is due to the effect on the motor control by the machine rigidity, etc. Furthermore, the value to which the error from the motor shaft to the machine end is added becomes the actual machine end positioning precision. For machines requiring accurate positioning precision at the machine end, use the MDS-B-V1/V2 Series servo amplifier capable of scale feedback input.

(3) Surface precision during machining : Δεv

This is the precision outline that affects the machine tools, etc., which are important factors in the machine operation path and interpolation functions. It also affects the surface roughness of the machining surface. The machining surface roughness is affected by elements caused by the motor's electrical characteristics (torque ripple, etc.) and mechanical characteristics (cogging torque, etc.). In the NC unit feed axis motor, those torque characteristics are excellent, and higher precision machining is possible than that of other motors. Because the effects of torque ripple and cogging torque are relatively smaller in motors with large amounts of inertia, the motor with the larger inertia of two identical capacity motors will be more advantageous for surface precision. Due to the effects of differences in characteristics of the motor itself, the surface precision during machining will differ greatly according to the motor series.

(4) Absolute position repeatability : Δεa

This is the precision outline that affects the absolute position system machine, and expresses the repeatability of the position before the power was shut off and the position when the power is turned on again.

With the single motor unit, the precision is 1 to 2 times the theoretic precision Δε. Note that the absolute position repeatability Δεa is the difference from when the power was turned off last and returned on. This error is not cumulated.

Table 11-4 shows the approximate precision at the motor end of each motor series. Obtain the precision at the motor end during actual machining by adding the machine precision to the value in the table.

Table 11-4 Precision by motor series

Motor series	Control resolution RNG (pulse/rev)	Theoretic precision Δε	Positioning precision Δεp	Surface precision Δεv	Absolute position repeatability Δεa
HS-SF	100000	$\frac{\Delta S}{RNG}$	Δε to 2Δε	10Δε to 20Δε	Δε to 2Δε
HS-RF	100000			10Δε to 20Δε	
HS-MF	8000			30Δε to 40Δε	

(Note) The expressions in the table indicate the approximate accuracy at the motor end. The accuracy at the machine end during actual machining is obtained by adding this to the machine accuracy.

上正科技有限公司
購買、維修 此手冊零組件
電話： 037-466333
Email: service@repairtw.com
Line id: @zzzz
www.repairtw.com

11-3 Selection of servomotor capacity

The following three elements are used to determine the servomotor capacity.

1. Load inertia ratio
2. Short time characteristics (acceleration/deceleration torque)
3. Continuous characteristics (continuous effective load torque)

Carry out appropriate measures, such as increasing the motor capacity, if any of the above conditions is not fulfilled.

11-3-1 Load inertia ratio

Each servomotor has an appropriate load inertia ratio (load inertia/motor inertia). The control becomes unstable when the load inertia ratio is too large, and parameter adjustment becomes difficult. It becomes difficult to improve the surface precision in the feed axis, and the positioning time cannot be shortened in the position axis because the settling time is longer.
If the load inertia ratio exceeds the recommended value in the servomotor list of specifications, increase the motor capacity or change to a motor series with a large inertia. Note that the recommended value for the load inertia ratio is strictly one guideline. This does not mean that controlling a load with inertia exceeding the recommended value is impossible.

POINT

When selecting feed axis servomotors for NC unit machine tools, place importance on the surface precision during machining. To do this, always select a servomotor with a load inertia ratio within the recommended value. Select the lowest value possible within that range.

上正科技有限公司
購買、維修 此手冊零組件
電話： 037-466333
Email: service@epanlw.com
Line id: @zzzz

11-3-2 Short time characteristics

In addition to the rated output, the servomotor has an output range that can only be used for short times such as acceleration/deceleration. This range is expressed at the maximum torque. The maximum torque differs for each motor even at the same capacity, so confirm the torque in section "2-2 Servomotor".
The maximum torque affects the acceleration/deceleration time constant that can be driven. The linear acceleration/deceleration time constant ta can be approximated from the machine specifications using expression (11-2). Determine the maximum motor torque required from this expression, and select the motor capacity.

$$ta = \frac{(J_L + J_M) \times N}{95.5 \times (0.8 \times T_{MAX} - T_L)} \quad \text{(msec)} \qquad \text{..... (11-2)}$$

N	: Motor reach speed	(r/min)
J_L	: Motor shaft conversion load inertia	($\times 10^{-4}$kg·cm^2)
J_M	: Motor inertia	($\times 10^{-4}$kg·cm^2)
T_{MAX}	: Maximum motor torque	(N·m)
T_L	: Motor shaft conversion load (friction, unbalance) torque	(N·m)

11-3-3 Continuous characteristics

A typical operation pattern is assumed, and the motor's continuous effective load torque (Trms) is calculated from the motor shaft conversion and load torque. If numbers ① to ⑧ in the following drawing were considered a one cycle operation pattern, the continuous effective load torque is obtained from the root mean square of the torque during each operation, as shown in the expression (11-3).

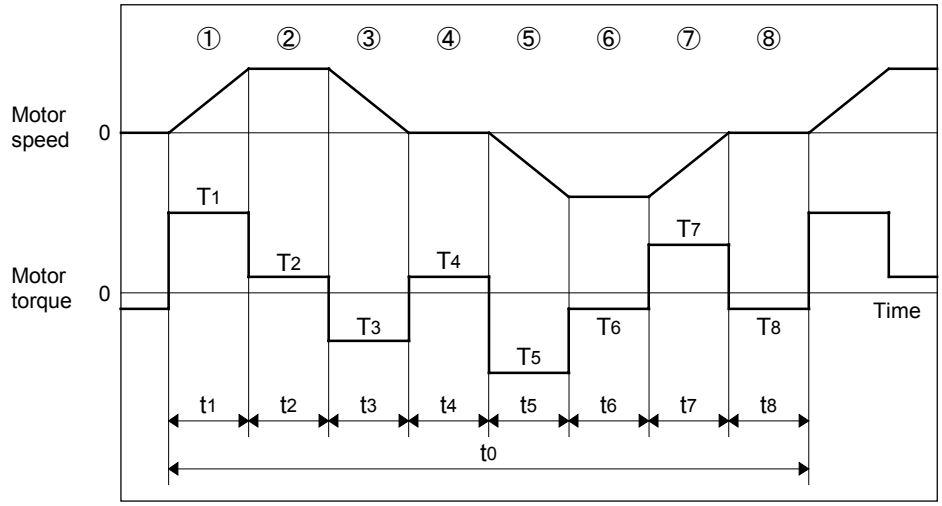

Fig. 11-1 Continuous operation pattern

上正科技有限公司
購買、維修 此手冊零組件
電話： 037-406333
Email: service@repairtw.com
Line id: @zzzz
www.repairtw.com

$$Trms = \sqrt{\frac{T1^2 \cdot t1 + T2^2 \cdot t2 + T3^2 \cdot t3 + T4^2 \cdot t4 + T5^2 \cdot t5 + T6^2 \cdot t6 + T7^2 \cdot t7 + T8^2 \cdot t8}{t0}} \quad \text{..... (11-3)}$$

Select a motor so that the continuous effective load torque (Trms) is 80% or less of the motor rated torque (Tra) (stall torque (Tst) in the HC, HAN Series).

$$Trms \leq 0.8 \bullet Tra \text{ (or } 0.8 \bullet Tst) \quad \text{..... (11-4)}$$

The amount of acceleration torque (Ta) shown in tables 11-6 and 11-7 is the torque to accelerate the load inertia in a frictionless state. It can be calculated by the expression (11-5). (For linear acceleration/deceleration)

$$Ta = \frac{(J_L + J_M) \times N}{95.5 \times ta} \ (N \bullet m) \quad \text{..... (11-5)}$$

N	:	Motor reach speed	(r/min)
J_L	:	Motor shaft conversion load inertia	($\times 10^{-4}$kg·cm^2)
J_M	:	Motor inertia	($\times 10^{-4}$kg·cm^2)
ta	:	Linear acceleration/deceleration time constant	(msec)

(1) Horizontal axis load torque

When operations ① to ⑧ are for a horizontal axis, calculate so that the following torques are required in each period.

Table 11-6 Load torques of horizontal axes

Period	Load torque calculation method	Explanation
①	(Amount of acceleration torque) + (Kinetic friction torque)	Normally the acceleration/deceleration time constant is calculated so this torque is 80% of the maximum torque of the motor.
②	(Kinetic friction torque)	
③	(Amount of deceleration torque) + (Kinetic friction torque)	The signs for the amount of acceleration torque and amount of deceleration torque are reversed when the absolute value is the same value.
④	(Static friction torque)	Calculate so that the static friction torque is always required during a stop.
⑤	– (Amount of acceleration torque) – (Kinetic friction torque)	The signs are reversed with period ① when the kinetic friction does not change according to movement direction.
⑥	– (Kinetic friction torque)	The signs are reversed with period ② when the kinetic friction does not change according to movement direction.
⑦	– (Amount of deceleration torque) – (Kinetic friction torque)	The signs are reversed with period ③ when the kinetic friction does not change according to movement direction.
⑧	– (Static friction torque)	Calculate so that the static friction torque is always required during a stop.

上正科技有限公司
購買、維修 此手冊零組件
電話： 037 466332
Email: service@repairtw.com
Line id: @zzz2
www.repairtw.com

(2) Unbalance axis load torque

When operations ① to ⑧ are for an unbalance axis, calculate so that the following torques are required in each period. Note that the forward speed shall be an upward movement.

Table 11-7 Load torques of unbalance axes

Period	Load torque calculation method	Explanation
①	(Amount of acceleration torque) + (Kinetic friction torque) + (Unbalance torque)	Normally the acceleration/deceleration time constant is calculated so this torque is 80% of the maximum torque of the motor.
②	(Kinetic friction torque) + (Unbalance torque)	
③	(Amount of deceleration torque) + (Kinetic friction torque) + (Unbalance torque)	The signs for the amount of acceleration torque and amount of deceleration torque are reversed when the absolute value is the same value.
④	(Static friction torque) + (Unbalance torque)	The holding torque during a stop becomes fairly large. (Upward stop)
⑤	– (Amount of acceleration torque) – (Kinetic friction torque) + (Unbalance torque)	
⑥	– (Kinetic friction torque) + (Unbalance torque)	The generated torque may be in the reverse of the movement direction, depending on the size of the unbalance torque.
⑦	– (Amount of deceleration torque) – (Kinetic friction torque) + (Unbalance torque)	
⑧	– (Static friction torque) + (Unbalance torque)	The holding torque becomes smaller than the upward stop. (Downward stop)

POINT

During a stop, the static friction torque may constantly be applied. The static friction torque and unbalance torque may particularly become larger during an unbalance upward stop, and the torque during a stop may become extremely large. Therefore, caution is advised.

11-4 Selection of regenerative resistor

The intelligent servomotor series does not have the optional regenerative resistor. (Only the standard built-in resistor is provided.) Thus, when selecting the motor, make sure that the regenerative energy does not exceed the capacity of the built-in regenerative resistor.

11-4-1 Limits for HS-MF23

The HS-MF23 does not have a built-in regenerative resistor. Thus, there are limits to the instantaneous regeneration capacity. Avoid use in which the regeneration occurs continuously, such as with a vertical axis.
When using the motor in the left range of the graph on the right, there are no limits to the regeneration frequency. When used in the right range, an overvoltage alarm could occur, so avoid using in this range.

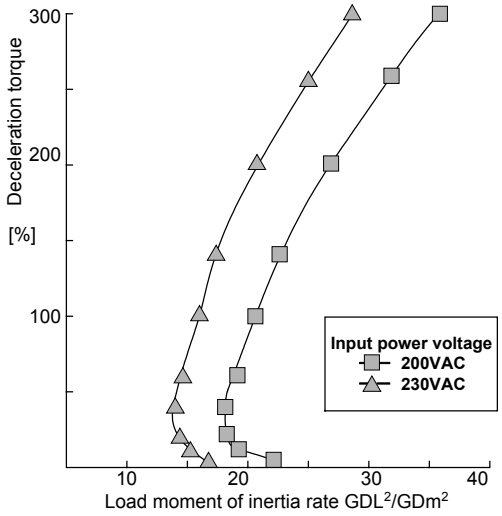

上正科技有限公司
購買、維修 此手冊零組件
電話：
Email:
Line id: @zzzz
www.repairtw.com

11-4-2 Approximate calculation of positioning frequency

The tolerable positioning frequency for the HS-FR/HS-SF type can be approximately calculated with expression (11-5).
To obtain the detailed value, refer to section "11-4-3 Calculating the regenerative energy" and section "11-4-4 Calculating the positioning frequency", and calculate.

$$\text{Tolerable frequency} = \frac{\text{Tolerable frequency for independent motor}}{(m+1)} \times \left(\frac{\text{Rated rotation speed}}{\text{Continuous rotation speed}}\right)^2$$

$$m = J_L/J_M \qquad \text{..... (11-5)}$$

Type	RF43	RF73	SF52	SF53	SF102	SF103	SF202
Tolerable frequency for independent motor	360	195	220	100	110	50	50

11-4-3 Calculation of regenerative energy

(1) For horizontal axis

For the horizontal axis, the regenerative energy E_R consumed by the regenerative resistor can be calculated with the expression (11-6). If the E_R value is negative, all of the regenerative energy is absorbed by the capacitor on the amplifier, and the energy consumption is zero ($E_R = 0$).

$$E_R = 5.48 \times 10^{-7} \cdot \eta \cdot (J_L + J_M) \cdot N^2 - Ec \ (J) \qquad \text{..... (11-6)}$$

η : Motor reverse effect
J_L : Motor inertia ($\times 10^{-4}$kg·cm^2)
J_M : Load inertia ($\times 10^{-4}$kg·cm^2)
N : Motor speed (r/min)
Ec : Amplifier charging energy (J)

Example

The regeneration energy is obtained for when the axis stops from the rated speed while a load with the same inertia as the motor is connected to the HC52 motor.
Regeneration energy ER is calculated using expression (11-6) below.

$$E_R = 5.48 \times 10^{-7} \times 0.85 \times (6.6 + 6.6) \times 2000^2 - 11 = 13.6 \text{ (J)}$$

Servomotor reverse effect and amplifier charging energy

Servomotor	Motor reverse effect η	Charging energy Ec (J)	Servomotor	Motor reverse effect η	Charging energy Ec (J)
HS-MF23	0.70	9	HS-SF52	0.85	12
HS-RF43	0.85	16	HS-SF53	0.85	12
HS-RF73	0.85	16	HS-SF102	0.85	22
			HS-SF103	0.85	22
			HS-SF202	0.85	40

POINT

The regenerative energy is the value for when the amplifier input power voltage is 220 V.
If the input voltage is higher than this, the charging energy will decrease and the regeneration energy will increase.

(2) For an unbalance axis

The regenerative energy differs in the upward stop and downward stop for an unbalance axis. A constant regeneration state results during downward movement if the unbalance torque is the same as or larger than the friction torque.

上正科技有限公司
購買、維修 此手冊零組件
電話： 037-466333
Email: service@repairtw.com
Line Id: @zzzz
www.repairtw.com

	Regeneration energy
Upward stop	A regeneration state only occurs when deceleration torque (downward torque) is generated. $E_{RU} = 5.24 \times 10^{-5} \cdot \eta \cdot T_{du} \cdot N \cdot td - Ec$ (J) ..... (11-7) η : Motor reverse efficiency T_{du} : Upward stop deceleration torque (N m) N : Motor speed (r/min) td : Deceleration time (time constant) (msec) Ec : Amplifier charging energy (J)
Downward stop	A regeneration state occurs even during constant rate feed when the upward torque Ts during dropping is generated. Calculated so that Ts = 0 when Ts is downward. $E_{RD} = \frac{2\pi \cdot \eta \cdot Ts \cdot L}{\Delta S} + 5.24 \times 10^{-5} \cdot \eta \cdot T_{dd} \cdot N \cdot td - Ec$ (J) ..... (11-8) η : Motor reverse efficiency Ts : Upward torque during dropping (N·m) L : Constant rate travel (mm) ΔS : Travel per motor rotation (mm) T_{dd} : Downward stop deceleration torque (N·m) N : Motor speed (r/min) td : Deceleration time (time constant) (msec) Ec : Amplifier charging energy (J)
One return is assumed to be one cycle, and the regeneration energy per cycle (E_R) is obtained using expression (11-9). $E_R = E_{RU} + E_{RD}$ (J) ..... (11-9)	

(Example)

A return operation is executed for a time constant of 50msec for 200mm. The operation is executed at F20000 in a machine tool vertical axis driven by an HS-SF52 motor. The regenerative energy per return operation is obtained at this time.

Note the following :

Travel per upward motor rotation	:	10mm
Upward stop deceleration torque	:	5N·m
Downward stop deceleration torque	:	8N·m
Upward torque during downward movement	:	0.5N·m

Using expression (11-7), the upward stop regeneration energy E_{RU} is as follows :

$$E_{RU} = 5.24 \times 10^{-5} \times 0.85 \times 5 \times 2000 \times 50 - 11 = 11.3 \text{ (J)}$$

The acceleration/deceleration distance required to accelerate at the 50msec acceleration/deceleration time constant to 20000mm/min. is as follows:

$$\frac{20000 \times 50}{2 \times 60 \times 1000} = 8.3 \text{ (mm)}$$

Therefore, the constant speed travel is 183.4mm.
The downward stop regeneration energy E_{RD} is obtained using the following expression (11-8).

$$E_{RD} = \frac{2\pi \times 0.85 \times 0.5 \times 183.4}{10} + 5.24 \times 10^{-5} \times 0.85 \times 8 \times 2000 \times 50 - 11 = 73.6 \text{ (J)}$$

Thus, the regeneration energy per return operation E_R is as follows :

$$E_R = 11.3 + 73.6 = 84.9 \text{ (J)}$$

上正科技有限公司
購買、維修 此手冊零組件
電話： 037-466333
Email: service@repairtw.com
Line id: @zzz
www.repairtw.com

11-4-4 Calculation of positioning frequency

Select the regenerative resistor so that the positioning frequency DP (times/minute) calculated by the regenerative resistor capacity P_R (W) and the regenerative energy ER (J) consumed by the regenerative resistor is within the range shown in expression (11-10). With the unbalance axis, the number of times for one cycle to raise and lower the axis is judged as DP.

$$DP < 48 \cdot \frac{P_R}{E_R} \text{ (times/minute)} \quad \text{.....} \quad (11\text{-}10)$$

Regenerative resistor specifications for each motor

Motor type	Capacity PR (W)
HS-RF43/73	33
HS-SF52/53/102/103	60
HS-SF202	80

11-5 Motor shaft conversion load torque

The main load torque calculation expressions are shown below.

Type	Mechanism	Calculation expression
Linear movement	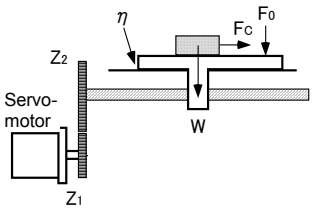	$T_L = \frac{F}{2\times10^3\pi\eta} \cdot \left(\frac{V}{N}\right) = \frac{F\cdot\Delta S}{2\times10^3\pi\eta}$ T_L : Load torque (N·m) F : Force in axial direction of linear motion machine (N) η : Drive system efficiency (%) V : Speed of linear operation object (mm/min) N : Motor speed (r/min) ΔS: Object movement amount per motor rotation (mm) Z_1, Z_2: Deceleration ratio F in the above expression is obtained from the lower expression when the table is moved as shown on the left. $F = Fc + \mu (W \cdot g \cdot F_0)$ Fc : Force applied on axial direction of moving section (N) F_0 : Tightening force on inner surface of table guide (N) W : Total weight of moving section (kg) g : Gravitational acceleration (m/sec^2) μ : Friction coefficient
Rotary movement	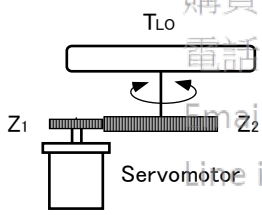	$T_L = \frac{Z_1}{Z_2} \cdot \frac{1}{\eta} \cdot T_{LO} + T_F = \frac{1}{n} \cdot \frac{1}{\eta} \cdot T_{LO} + T_F$ T_L : Load torque (N·m) T_{LO} : Load torque on load shaft (N) T_F : Motor shaft conversion load friction torque (N·m) η : Drive system efficiency Z_1, Z_2 : Deceleration ratio n : Deceleration rate
Vertical movement	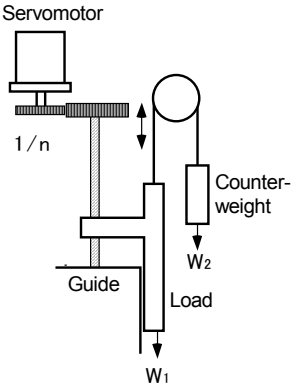	When rising $T_L = T_U + T_F$ When lowering $T_L = T_U - T_F$ T_L : Load torque (N·m) T_U : Unbalanced torque (N·m) T_F : Friction torque on moving section (N·m) $T_U = \frac{(W_1 - W_2)\cdot g}{2\times10^3\pi\eta} \cdot \left(\frac{V}{N}\right) = \frac{(W_1 - W_2)\cdot g\cdot \Delta S}{2\times10^3\pi\eta}$ $T_F = \frac{\mu\cdot(W_1 + W_2)\cdot g\cdot \Delta S}{2\times10^3\pi\eta}$ W_1 : Load weight (kg) W_2 : Counterweight weight (kg) η : Drive system efficiency g : Gravitational acceleration = 9.8 (m/sec^2) V : Speed of linear operation object (mm/min) N : Motor speed (r/min) ΔS: Object movement speed per motor rotation (mm) μ : Friction coefficient

上正科技有限公司
購買、維修 各手冊零組件
電話： 037-466333
Email: service@repairtw.com
line id: @2222
www.repairtw.com

11-6 Expressions for load inertia calculation

The calculation method for a representative load inertia is shown.

Type	Mechanism	Calculation expression
Cylinder	Rotary shaft is cylinder center 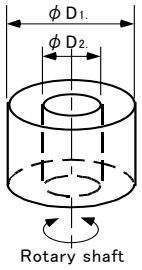	$J_L = \frac{\pi \cdot \rho \cdot L}{32}(D_1^4 - D_2^4) = \frac{W}{8}(D_1^2 - D_2^2)$ J_L : Load inertia [kg·m²] ρ : Density of cylinder material [kg·m³] L : Length of cylinder [m] D_1 : Outer diameter of cylinder [m] D_2 : Inner diameter of cylinder [m] W : Weight of cylinder [kg] **Reference data** Material densities Iron ..... 7.80×10^3 [kg/m³] Aluminum ..... 2.70×10^3 [kg/m³] Copper ..... 8.96×10^3 [kg/m³]
	When rotary shaft and cylinder shaft are deviated 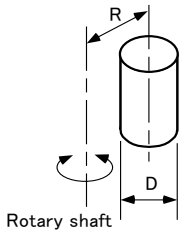	$J_L = \frac{W}{8}(D^2 + 8R^2)$ J_L : Load inertia [kg·m²] W : Weight of cylinder [kg] D : Outer diameter of cylinder [m] R : Distance between rotary axis and cylinder axis [m]
Column	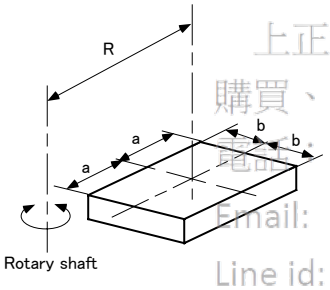	$J_L = W\left(\frac{a^2 + b^2}{8} + R^2\right)$ J_L : Load inertia [kg·m²] W : Weight of cylinder [kg] a.b.R : Left diagram [m]
Object that moves linearly	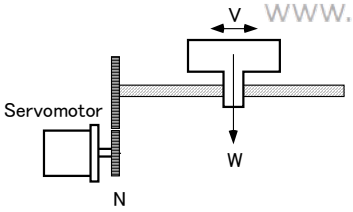	$J_L = W\left(\frac{1}{2\pi N} \cdot \frac{V}{10}\right)^2 = W\left(\frac{\Delta S}{20\pi}\right)^2$ J_L : Load inertia [kg·m²] W : Weight of object that moves linearly [kg] N : Motor speed [r/min] V : Speed of object that moves linearly [mm/min] ΔS : Stroke of object that moves linearly per motor rotation [mm]
Suspended object	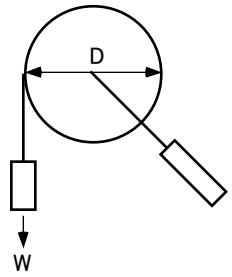	$J_L = W\left(\frac{D}{2}\right)^2 + J_P$ J_L : Load inertia [kg·m²] W : Weighty of object [kg] D : Diameter of pulley [m] J_P : Inertia of pulley [kg·m²]
Converted load	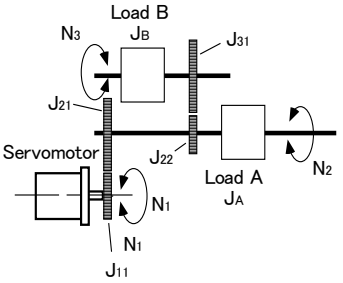	$J_L = J_{11} + (J_{21} + J_{22} + J_A) \cdot \left(\frac{N_2}{N_1}\right)^2 + (J_{31} + J_B) \cdot \left(\frac{N_3}{N_1}\right)^2$ J_L : Load inertia [kg·m²] J_A,J_B : Inertia of load A, B [kg·m²] J_{11}~J_{31} : Inertia [kg·m²] N_1~N_3 : Each shaft's speed [r/min]

上正科技有限公司
購買、維修 此手冊零組件
電話: 037-466338
Email: service@repairtw.com
Line id: @zzzz
www.repairtw.com

上正科技有限公司
購買、維修 此手冊零組件
電話： 037-466333
Email: service@repairtw.com
Line id: @zzzz
www.repairtw.com

MITSUBISHI ELECTRIC CORPORATION
HEAD OFFICE : MITSUBISHI DENKI BLDG., 2-2-3, MARUNOUCHI, CHIYODA-KU, TOKYO 100-8310, JAPAN

MODEL	HS Series
MODEL CODE	008-152
Manual No.	BNP-B3981*(ENG)

(0109)MEE

Specifications subject to change without notice.
Printed in Japan on recycled paper.