MITSUBISHI ELECTRIC

INVERTER

FR-F800

INSTRUCTION MANUAL (DETAILED)

Inverter for fans and pumps

FR-F820-00046(0.75K) to 04750(110K)
FR-F840-00023(0.75K) to 06830(315K)
FR-F842-07700(355K) to 12120(560K)
FR-F846-00023(0.75K) to 03610(160K)

零組件

pairtw.com

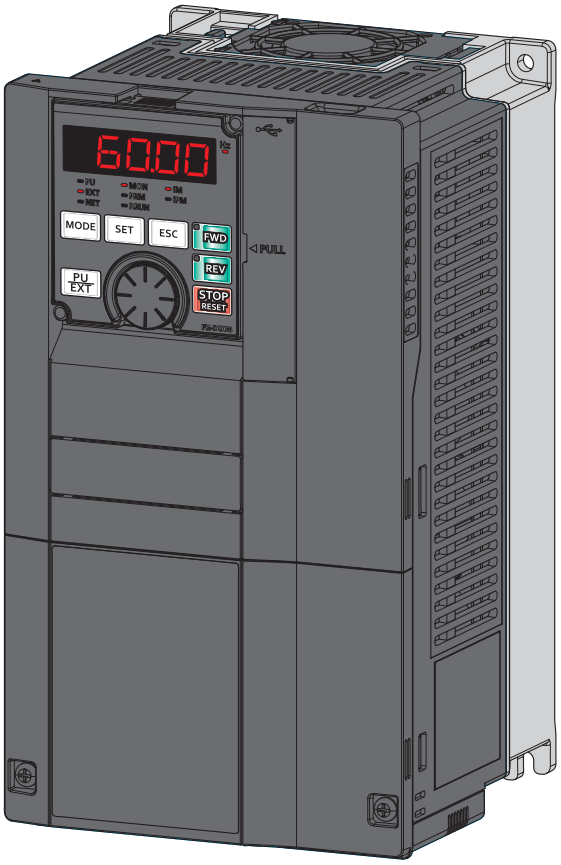

Safety instructions . . . 8

Chapter 1 INTRODUCTION . . . 16

1.1 Product checking and accessories . . . 17

1.2 Component names . . . 19

1.3 Operation steps . . . 21

1.4 About the related manuals . . . 22

Chapter 2 INSTALLATION AND WIRING . . . 24

2.1 Peripheral devices . . . 24

2.1.1 Inverter and peripheral devices . . . 24
2.1.2 Peripheral devices . . . 26

2.2 Removal and reinstallation of the operation panel or the front covers . . . 30

2.3 Installation of the inverter and enclosure design . . . 34

2.3.1 Inverter installation environment . . . 34
2.3.2 Amount of heat generated by the inverter . . . 37
2.3.3 Cooling system types for inverter enclosure . . . 38
2.3.4 Inverter installation . . . 39
2.3.5 Protruding the heat sink through a panel . . . 41

2.4 Terminal connection diagrams . . . 43

2.5 Main circuit terminals . . . 47

2.5.1 Details on the main circuit terminals . . . 47
2.5.2 Main circuit terminal layout and wiring to power supply and motor . . . 48
2.5.3 Applicable cables and wiring length . . . 50
2.5.4 Earthing (grounding) precautions . . . 57

2.6 Control circuit . . . 58

2.6.1 Details on the control circuit terminals . . . 58
2.6.2 Control logic (sink/source) change . . . 62
2.6.3 Wiring of control circuit . . . 63
2.6.4 Wiring precautions . . . 66
2.6.5 When using separate power supplies for the control circuit and the main circuit . . . 66
2.6.6 When supplying 24 V external power to the control circuit . . . 69
2.6.7 Safety stop function . . . 70

2.7 Communication connectors and terminals . . . 73

2.7.1 PU connector . . . 73
2.7.2 USB connector . . . 74
2.7.3 RS-485 terminal block . . . 75

2.8 Connection of stand-alone option units . . . 76

2.8.1 Connection of the brake unit (FR-BU2) . . . 76

上正科技有限公司
購買、維修 此手冊零組件
電話：037-466333
Email: service@repairtw.com
Line Id: @zzzz
www.repairtw.com

CONTENTS

2.8.2 Connection of the brake unit (FR-BU) . . . 78
2.8.3 Connection of the brake unit (BU type) . . . 78
2.8.4 Connection of the high power factor converter (FR-HC2) . . . 79
2.8.5 Connection of the power regeneration common converter (FR-CV) . . . 80
2.8.6 Connection of the power regeneration converter (MT-RC) . . . 81
2.8.7 Connection of the DC reactor (FR-HEL) . . . 81

Chapter 3 PRECAUTIONS FOR USE OF THE INVERTER 84

3.1 Electro-magnetic interference (EMI) and leakage currents . . . 84

3.1.1 Leakage currents and countermeasures . . . 84
3.1.2 Techniques and measures for electromagnetic compatibility (EMC) . . . 86
3.1.3 Built-in EMC filter . . . 88

3.2 Power supply harmonics . . . 91

3.2.1 Power supply harmonics . . . 91
3.2.2 Harmonic suppression guidelines in Japan . . . 91

3.3 Installation of a reactor . . . 95

3.4 Power shutdown and magnetic contactor (MC) . . . 96

3.5 Countermeasures against deterioration of the 400 V class motor insulation . . . 98

3.6 Checklist before starting operation . . . 99

3.7 Failsafe system which uses the inverter . . . 102

Chapter 4 BASIC OPERATION 106

4.1 Operation panel (FR-DU08) . . . 106

4.1.1 Components of the operation panel (FR-DU08) . . . 106
4.1.2 Basic operation of the operation panel . . . 108
4.1.3 Digital characters and their corresponding printed equivalents . . . 109
4.1.4 Changing the parameter setting value . . . 110

4.2 Monitoring the inverter . . . 111

4.2.1 Monitoring of output current and output voltage . . . 111
4.2.2 First priority monitor screen . . . 111
4.2.3 Displaying the set frequency . . . 111

4.3 Easy setting of the inverter operation mode . . . 112

4.4 Frequently-used parameters (simple mode parameters) . . . 114

4.4.1 Simple mode parameter list . . . 114

4.5 Basic operation procedure (PU operation) . . . 116

4.5.1 Setting the frequency on the operation panel (example: operating at 30 Hz) . . . 116
4.5.2 Perform PU operation using the setting dial like a potentiometer . . . 117
4.5.3 Setting the frequency with switches (multi-speed setting) . . . 118
4.5.4 Setting the frequency using an analog signal (voltage input) . . . 119
4.5.5 Setting the frequency using an analog signal (current input) . . . 120

上正科技有限公司
購買、維修 此手冊零組件
電話： 037-466333
Email: service@repairtw.com
Line id: @zzzz
www.repairtw.com

4.6 Basic operation procedure (External operation) 122

4.6.1 Setting the frequency on the operation panel 122
4.6.2 Setting the frequency and giving a start command with switches (multi-speed setting) (Pr.4 to Pr.6) 123
4.6.3 Setting the frequency using an analog signal (voltage input) 124
4.6.4 Changing the frequency (60 Hz, initial value) at the maximum voltage input (5 V, initial value). 126
4.6.5 Setting the frequency using an analog signal (current input) 127
4.6.6 Changing the frequency (60 Hz, initial value) at the maximum current input (at 20 mA, initial value) 128

4.7 Basic operation procedure (JOG operation) 129

4.7.1 Giving a start command by using external signals for JOG operation 129
4.7.2 Giving a start command from the operation panel for JOG operation. 130

Chapter 5 PARAMETERS 132

5.1 Parameter list. 132

5.1.1 Parameter list (by parameter number) 132
5.1.2 Use of a function group number for the identification of parameters 156
5.1.3 Parameter list (by function group number) 158

5.2 Control method 167

5.2.1 Changing the control method and mode. 169
5.2.2 Selecting the Advanced magnetic flux vector control 172
5.2.3 Selecting the PM motor control. 174

5.3 Speed control under PM motor control 180

5.3.1 Setting procedure of PM motor control 180
5.3.2 Performing high-accuracy, fast-response control (gain adjustment for PM motor control) 182
5.3.3 Troubleshooting in the speed control 184
5.3.4 Torque detection filter 185

5.4 (E) Environment setting parameters 186

5.4.1 Real time clock function 187
5.4.2 Reset selection / disconnected PU detection / PU stop selection. 188
5.4.3 PU display language selection 191
5.4.4 Beep control 191
5.4.5 PU contrast adjustment. 191
5.4.6 Display-off setting 191
5.4.7 Direct setting. 192
5.4.8 Resetting USB host errors 192
5.4.9 Easy frequency setting (Volume-knob-like setting) and key lock function selection 192
5.4.10 Frequency change increment amount setting. 193
5.4.11 Multiple rating setting 194
5.4.12 Using the power supply exceeding 480 VAC 195
5.4.13 Parameter write selection 196
5.4.14 Password 198
5.4.15 Free parameter 200
5.4.16 Setting multiple parameters by batch 200
5.4.17 Extended parameter display and user group function. 204
5.4.18 PWM carrier frequency and Soft-PWM control 207
5.4.19 Inverter parts life display 208
5.4.20 Maintenance timer alarm. 212
5.4.21 Current average value monitor signal 213

5.5 (F) Setting of acceleration/deceleration time and acceleration/deceleration pattern 216

5.5.1 Setting the acceleration and deceleration time 216
5.5.2 Acceleration/deceleration pattern 219
5.5.3 Remote setting function 222
5.5.4 Starting frequency and start-time hold function. 225
5.5.5 Minimum motor speed frequency at the motor start up. 226

上正科技有限公司
購買、維修 此手冊零組件
電話： 037-466333
Email: service@repairtw.com
Line id: @zzzz
www.repairtw.com

CONTENTS

5.6 (D) Operation command and frequency command . . . 228

5.6.1 Operation mode selection . . . 228
5.6.2 Startup of the inverter in Network operation mode at power-ON . . . 237
5.6.3 Start command source and frequency command source during communication operation . . . 239
5.6.4 Reverse rotation prevention selection . . . 245
5.6.5 Frequency setting using pulse train input . . . 245
5.6.6 JOG operation . . . 248
5.6.7 Operation by multi-speed setting . . . 249

5.7 (H) Protective function parameter . . . 252

5.7.1 Motor overheat protection (electronic thermal O/L relay) . . . 252
5.7.2 Cooling fan operation selection . . . 258
5.7.3 Earth (ground) fault detection at start . . . 259
5.7.4 Varying the activation level of the undervoltage protective function . . . 260
5.7.5 Initiating a protective function . . . 260
5.7.6 I/O phase loss protection selection . . . 260
5.7.7 Retry function . . . 261
5.7.8 Emergency drive . . . 263
5.7.9 Limiting the output frequency (maximum/minimum frequency) . . . 271
5.7.10 Avoiding machine resonance points (frequency jump) . . . 272
5.7.11 Stall prevention operation . . . 273
5.7.12 Load characteristics fault detection . . . 281
5.7.13 Motor overspeeding detection . . . 285

5.8 (M) Item and output signal for monitoring . . . 286

5.8.1 Speed indication and its setting change to rotations per minute . . . 286
5.8.2 Monitor item selection on operation panel or via communication . . . 288
5.8.3 Monitor display selection for terminals FM/CA and AM . . . 297
5.8.4 Adjustment of terminal FM/CA and terminal AM . . . 302
5.8.5 Energy saving monitoring . . . 306
5.8.6 Output terminal function selection . . . 312
5.8.7 Output frequency detection . . . 319
5.8.8 Output current detection function . . . 321
5.8.9 Output torque detection function . . . 323
5.8.10 Remote output function . . . 324
5.8.11 Analog remote output function . . . 325
5.8.12 Fault code output selection . . . 327
5.8.13 Pulse train output to announce cumulative output energy . . . 328
5.8.14 Detection of control circuit temperature . . . 329

5.9 (T) Multi-function input terminal parameters . . . 330

5.9.1 Analog input selection . . . 330
5.9.2 Analog input terminal (terminal 1, 4) function assignment . . . 334
5.9.3 Analog input compensation . . . 335
5.9.4 Response level of analog input and noise elimination . . . 337
5.9.5 Frequency setting voltage (current) bias and gain . . . 339
5.9.6 Bias and gain for voltage (current) setting of stall prevention operation level . . . 344
5.9.7 Checking of current input on analog input terminal . . . 350
5.9.8 Input terminal function selection . . . 355
5.9.9 Inverter output shutoff . . . 357
5.9.10 Selecting the condition to activate the Second function selection (RT) signal . . . 358
5.9.11 Start signal operation selection . . . 359

5.10 (C) Motor constant parameters . . . 362

5.10.1 Applied motor . . . 362
5.10.2 Offline auto tuning . . . 366
5.10.3 Offline auto tuning for a PM motor (motor constant tuning) . . . 375
5.10.4 Online auto tuning . . . 382

5.11 (A) Application parameters . . . 386

5.11.1 Electronic bypass function . . . 387
5.11.2 Self power management . . . 393

上川科技有限公司
購買、維修 此手冊零組件
電話： 037-466333
Email: service@repairtw.com
Line id: @zzzz
www.repairtw.com

5.11.3 Start count monitor . . . 395
5.11.4 Traverse function . . . 396
5.11.5 Cleaning function . . . 398
5.11.6 PID control . . . 401
5.11.7 PID gain tuning . . . 417
5.11.8 Changing the display increment of numerical values used in PID control . . . 423
5.11.9 PID Pre-charge function . . . 425
5.11.10 Multi-pump function (Advanced PID function) . . . 430
5.11.11 PID control enhanced functions . . . 439
5.11.12 Automatic restart after instantaneous power failure/flying start with an induction motor . . . 446
5.11.13 Automatic restart after instantaneous power failure/flying start with a PM motor . . . 451
5.11.14 Offline auto tuning for a frequency search . . . 454
5.11.15 Power failure time deceleration-to-stop function . . . 458
5.11.16 PLC function . . . 462
5.11.17 Trace function . . . 465

5.12 (N) Communication operation parameters . . . 473

5.12.1 Wiring and configuration of PU connector . . . 473
5.12.2 Wiring and configuration of RS-485 terminals . . . 475
5.12.3 Initial setting of operation via communication . . . 478
5.12.4 Initial settings and specifications of RS-485 communication . . . 482
5.12.5 Mitsubishi inverter protocol (computer link communication) . . . 484
5.12.6 MODBUS RTU communication specification . . . 498
5.12.7 BACnet MS/TP protocol . . . 511
5.12.8 USB device communication . . . 523
5.12.9 Automatic connection with GOT . . . 523
5.12.10 Backup/restore . . . 525

5.13 (G) Control parameters . . . 527

5.13.1 Manual torque boost . . . 527
5.13.2 Base frequency voltage . . . 528
5.13.3 Load pattern selection . . . 530
5.13.4 Excitation current low-speed scaling factor . . . 531
5.13.5 Energy saving control . . . 532
5.13.6 Adjustable 5 points V/F . . . 533
5.13.7 SF-PR slip amount adjustment mode . . . 534
5.13.8 DC injection brake . . . 535
5.13.9 Output stop function . . . 536
5.13.10 Stop selection . . . 538
5.13.11 Regenerative brake selection and DC feeding mode . . . 539
5.13.12 Regeneration avoidance function . . . 545
5.13.13 Increased magnetic excitation deceleration . . . 547
5.13.14 Slip compensation . . . 548
5.13.15 Speed smoothing control . . . 549

5.14 Parameter clear / All parameter clear . . . 551

5.15 Copying and verifying parameters on the operation panel . . . 552

5.15.1 Parameter copy . . . 552
5.15.2 Parameter verification . . . 554

5.16 Copying and verifying parameters using a USB memory . . . 555

5.17 Checking parameters changed from their initial values (initial value change list) . . . 559

Chapter 6 PROTECTIVE FUNCTIONS . . . 562

6.1 Inverter fault and alarm indications . . . 562

上正科技有限公司
購買、維修 此手冊零組件
電話： 037-466333
Email: service@repairtw.com
Line id: @zzzz
www.repairtw.com

6.2 Reset method for the protective functions 563

6.3 Check and clear of the fault history 564

6.4 List of fault displays 566

6.5 Causes and corrective actions 568

6.6 Check first when you have a trouble 585

6.6.1 Motor does not start 585
6.6.2 Motor or machine is making abnormal acoustic noise 588
6.6.3 Inverter generates abnormal noise 588
6.6.4 Motor generates heat abnormally 588
6.6.5 Motor rotates in the opposite direction 589
6.6.6 Speed greatly differs from the setting 589
6.6.7 Acceleration/deceleration is not smooth 589
6.6.8 Speed varies during operation 590
6.6.9 Operation mode is not changed properly 590
6.6.10 Operation panel (FR-DU08) display is not operating 591
6.6.11 The motor current is too large 591
6.6.12 Speed does not accelerate 592
6.6.13 Unable to write parameter setting 592
6.6.14 Power lamp is not lit 593

Chapter 7 PRECAUTIONS FOR MAINTENANCE AND INSPECTION 596

專業維修服務中心
購買、維修 此手冊零組件
電話： 037-466333
Email: service@repairtw.com
Line id: @zzzz
www.repairtw.com

7.1 Inspection item 596

7.1.1 Daily inspection 596
7.1.2 Periodic inspection 596
7.1.3 Daily and periodic inspection 597
7.1.4 Checking the inverter and converter modules 598
7.1.5 Cleaning 599
7.1.6 Replacement of parts 599
7.1.7 Removal and reinstallation of the control circuit terminal block 605

7.2 Measurement of main circuit voltages, currents, and powers 606

7.2.1 Measurement of powers 608
7.2.2 Measurement of voltages and use of PT 608
7.2.3 Measurement of currents 608
7.2.4 Use of CT and transducer 609
7.2.5 Measurement of inverter input power factor 609
7.2.6 Measurement of converter output voltage (between terminals P and N) 609
7.2.7 Measurement of inverter output frequency 609
7.2.8 Insulation resistance test using megger 610
7.2.9 Pressure test 610

Chapter 8 SPECIFICATIONS 612

8.1 Inverter rating 612

8.2 Motor rating 615

8.2.1 Premium high-efficiency IPM motor [MM-EFS (1500 r/min specification)] 615
8.2.2 Premium high-efficiency IPM motor [MM-EFS (3000 r/min specification)] 617

8.2.3 Premium high-efficiency IPM motor [MM-THE4] 618

8.3 Common specifications 620

8.4 Outline dimension drawings 622

8.4.1 Inverter outline dimension drawings 622
8.4.2 Dedicated motor outline dimension drawings 630

Chapter 9 APPENDIX 634

9.1 For customers replacing the conventional model with this inverter 634

9.1.1 Replacement of the FR-F700(P) series 634
9.1.2 Replacement of the FR-F500(L) series 635

9.2 Specification comparison between PM motor control and induction motor control 635

9.3 Parameters (functions) and instruction codes under different control methods 638

9.4 For customers using HMS network options 654

上正科技有限公司
購買、維修 此手冊零組件
電話： 037-466333
Email: service@repairtw.com
Line id: @zzzz
www.repairtw.com

Safety instructions

Thank you for choosing Mitsubishi Electric inverter.
This Instruction Manual (Detailed) provides detailed instructions for advanced settings of the FR-F800 series inverters.
Incorrect handling might cause an unexpected fault. Before using this product, read all the relevant instruction manuals carefully to ensure proper use.
Do not attempt to install, operate, maintain or inspect this product until you have read the Instruction Manuals and appended documents carefully. Do not use this product until you have a full knowledge of this product mechanism, safety information and instructions.
Installation, operation, maintenance and inspection must be performed by qualified personnel. Here, qualified personnel means a person who meets all the following conditions:

- A person who possesses a certification in regard with electric appliance handling, or person took a proper engineering training. Such training may be available at your local Mitsubishi Electric office. Contact your local sales office for schedules and locations.
- A person who can access operating manuals for the protective devices (for example, light curtain) connected to the safety control system, or a person who has read these manuals thoroughly and familiarized themselves with the protective devices.

In this Instruction Manual, the safety instruction levels are classified into "WARNING" and "CAUTION".

⚠WARNING	**Incorrect handling may cause hazardous conditions, resulting in death or severe injury.**
⚠CAUTION	**Incorrect handling may cause hazardous conditions, resulting in medium or slight injury, or may cause only material damage.**

Note that even the ⚠ **CAUTION** level may lead to a serious consequence depending on conditions. Be sure to follow the instructions of both levels as they are critical to personnel safety.

上正科技有限公司
購買、維修 此手冊零組件
電話：037-466333
Email: service@repairtw.com
Line id: @zzzz
www.repairtw.com

◆Electric shock prevention

⚠WARNING

- Do not remove the front cover or the wiring cover while the power of this product is ON, and do not run this product with the front cover or the wiring cover removed as the exposed high voltage terminals or the charging part of the circuitry can be touched. Otherwise you may get an electric shock.
- Even if power is OFF, do not remove the front cover except for wiring or periodic inspection as the inside of this product is charged. Otherwise you may get an electric shock.
- Before wiring or inspection, check that the LED display of the operation panel is OFF. Any person who is involved in wiring or inspection shall wait for 10 minutes or longer after the power supply has been cut off, and check that there are no residual voltage using a tester or the like. The capacitor is charged with high voltage for some time after power OFF, and it is dangerous.
- This product must be earthed (grounded). Earthing (grounding) must conform to the requirements of national and local safety regulations and electrical code (NEC section 250, IEC 61140 class 1 and other applicable standards). A neutral-point earthed (grounded) power supply must be used for 400 V class of this product to be compliant with EN standard.
- Any person who is involved in wiring or inspection of this product shall be fully competent to do the work.
- This product body must be installed before wiring. Otherwise you may get an electric shock or be injured.
- Do not touch the setting dial or keys with wed hands. Doing so may cause an electric shock.
- Do not subject the cables to scratches, excessive stress, heavy loads or pinching. Doing so may cause an electric shock.
- Do not change the cooling fan while power is ON as it is dangerous.
- Do not touch the printed circuit board or handle the cables with wet hands. Doing so may cause an electric shock.
- Never touch the motor terminals, etc. right after powering OFF as the DC voltage is applied to the motor for 1 second at powering OFF if the main circuit capacitor capacity is measured. Doing so may cause an electric shock.
- Before wiring or inspection for a PM motor, confirm that the PM motor is stopped as a PM motor is a synchronous motor with high-performance magnets embedded inside and high-voltage is generated at the motor terminals while the motor is running even after the power of this product is turned OFF. In an application, such as fan and blower, that the motor may be driven by the load, connect a low-voltage manual contactor at the output side of this product and keep it open during wiring and inspection of this product. Otherwise you may get an electric shock.

上正科技有限公司
購買、維修、此手冊零組件
電話： 037-466333
Email: service@repairtw.com
Line id: @zzzz
www.repairtw.com

◆Fire prevention

⚠CAUTION

- This product must be installed on a nonflammable wall without any through holes so that nobody touches the heatsink, etc. on the rear side of this product. Installing it on or near flammable material may cause a fire.
- If this product has become faulty, the product power must be switched OFF. A continuous flow of large current may cause a fire.
- Do not connect a resistor directly to the DC terminals P/+ and N/-. Doing so could cause a fire.
- Be sure to perform daily and periodic inspections as specified in the Instruction Manual. If this product is used without any inspection, a burst, breakage, or a fire may occur.

◆Injury prevention

⚠CAUTION

- The voltage applied to each terminal must be as specified in the Instruction Manual. Otherwise burst, damage, etc. may occur.
- The cables must be connected to the correct terminals. Otherwise burst, damage, etc. may occur.
- The polarity (+ and -) must be correct. Otherwise burst, damage, etc. may occur.
- While power is ON or for some time after power-OFF, do not touch this product as it will be extremely hot. Doing so may cause a burn.

◆Additional instructions

The following instructions must be also followed. If this product is handled incorrectly, it may cause unexpected fault, an injury, or an electric shock.

⚠ CAUTION

Transportation and installation

- Any person who is opening a package using a sharp object, such as a knife or cutter, must wear gloves to prevent injuries caused by the edge of the sharp object.
- This product must be transported in correct method that corresponds to the weight. Failure to do so may lead to injuries.
- Do not stand or place any heavy object on this product.
- Do not stack the boxes containing this product higher than the number recommended.
- When carrying this product, do not hold it by the front cover. Doing so may cause a fall or failure of the product.
- During installation, caution must be taken not to drop this product as doing so may cause injuries.
- This product must be installed on the surface that withstands the weight of the product.
- Do not install this product on a hot surface.
- The installing orientation of this product must be correct.
- This product must be installed on a strong surface securely with screws so that it does not drop.
- Do not install or operate this product if it is damaged or has parts missing.
- Foreign conductive objects must be prevented from entering this product. That includes screws and metal fragments or other flammable substance such as oil.
- As this product is a precision instrument, do not drop or subject it to impact.
- The surrounding air temperature must be between -10 and +50°C (non-freezing) for this product at LD (light duty) rating or between -10 and +40°C (non-freezing) for this product at SLD (super light duty) rating. Otherwise the product may be damaged.
- The ambient humidity must be 95% RH or less (non-condensing) for this product. Otherwise the product may be damaged. (Refer to page 34 for details.)
- The temporary storage temperature (applicable to a short limited time such as a transportation time) must be between -20 and +65°C. Otherwise this product may be damaged.
- This product must be used indoors (without corrosive gas, flammable gas, oil mist, dust and dirt). Otherwise the product may be damaged.
- This product must be used at an altitude of 2500 m or less, with 5.9 m/s^2 or less vibration[*1] at 10 to 55 Hz (directions of X, Y, Z axes). Otherwise the product may be damaged. (For the installation at an altitude above 1000 m, consider a 3% reduction in the rated current per 500 m increase in altitude.)
- If halogen-based materials (fluorine, chlorine, bromine, iodine, etc.), included in fumigants to sterilize or disinfect wooden packages, infiltrate into this product, the product may be damaged. Prevent residual fumigant components from being infiltrated into the product when packaging, or use an alternative sterilization or disinfection method (heat disinfection, etc.). Note that sterilization or disinfection of wooden package should be performed before packing the product.

Wiring

- Do not install a power factor correction capacitor, surge absorber, or radio noise filter on the output side of this product. Doing so may be overheated or burn out.
- The output of this product (output terminals U, V, W) must be correctly connected to a motor. Otherwise the motor rotates inversely.
- Even after the power of this product is turned OFF, a PM motor is running for a while and the output terminals U, V, and W of this product wired to the PM motor hold high voltages all that while. Before wiring other terminals, be sure that the PM motor is stopped. Otherwise you may get an electric shock.
- Never connect a PM motor to the commercial power supply. Applying the commercial power to the input terminals (U, V, W) on a PM motor will burn the PM motor. The PM motor must be applied a power from this product with the output terminals (U, V, W).

Test operation

- Before starting the test operation, confirm or adjust the parameter settings. Failure to do so may cause some machines to make unexpected motions.

*1 2.9 m/s^2 or less for the FR-F840-04320(185K) or higher.

上正科技有限公司
購買、維修 此手冊零組件
電話： 037-466333
Email: service@repairtw.com
Line id: @zzzz
www.repairtw.com

⚠ WARNING

Usage

- Any person must stay away from the equipment after using the retry function in this product as the equipment will restart suddenly after the output shutoff of this product.
- Depending on the function settings of this product, the product does not stop its output even when the STOP/RESET key on the operation panel is pressed. To prepare for it, provide a separate circuit and switch (to turn OFF the power of this product, or apply a mechanical brake, etc.) for an emergency stop.
- Be sure to turn OFF the start (STF/STR) signal before clearing the fault as this product will restart the motor suddenly after a fault clear.
- Do not use a PM motor for an application that the motor may be driven by the load and run at a speed higher than the maximum motor speed.
- Use only a three-phase induction motor or PM motor as a load on this product. Connection of any other electrical equipment to the output of this product may damage the equipment.
- Do not modify this product.
- Do not remove any part which is not instructed to be removed in the Instruction Manuals. Doing so may lead to a failure or damage of this product.

上正科技有限公司
購買、維修 此手冊零組件
電話： 037-466333
Email: service@repairtw.com
Line id: @zzzz
www.repairtw.com

⚠ CAUTION

Usage

- The electronic thermal O/L relay function may not be enough for protection of a motor from overheating. It is recommended to install an external thermal relay or a PTC thermistor for overheat protection.
- Do not use a magnetic contactor on the input side of this product for frequent starting/stopping of this product. Otherwise the life of the product decreases.
- Use a noise filter or other means to minimize the electromagnetic interference with other electronic equipment used nearby this product.
- Appropriate measures must be taken to suppress harmonics. Otherwise harmonics in power systems generated from this product may heat/damage a power factor correction capacitor or a generator.
- For a 400 V class motor driven by this product, use an insulation-enhanced motor, or take measures to suppress surge voltage. Otherwise surge voltage attributable to the line constants may occur at the motor terminals, deteriorating the insulation of the motor.
- As all parameters return to their initial values after the Parameter clear or All parameter clear is performed, the needed parameters for this product operation must be set again before the operation is started.
- This product can be easily set for high-speed operation. Therefore, consider all things related to the operation such as the performance of a motor and equipment in a system before the setting change.
- The stop state of this product by the product's brake function (DC injection brake function) cannot be held. Install a device to apply brakes to a motor or equipment in a system for safety.
- Before running this product which have been stored and not been operated for a long period, perform an inspection and a test operation.
- To avoid damage to this product due to static electricity, static electricity in your body must be discharged before you touch this product.
- Only one PM motor can be connected to a single unit of this product.
- A PM motor must be used under PM motor control. Do not use a synchronous motor, induction motor, or synchronous induction motor.
- Do not connect a PM motor to this product at a setting for the induction motor control (initial setting). Do not connect an induction motor to this product at a setting for PM motor control. Doing so will cause a failure.
- As a process of starting a PM motor, turn ON the power of this product first, and then close the contactor on the output side of this product.
- When the emergency drive function is enabled, the operation is continued or the retry operation (automatic reset and restart) is repeated even if a fault occurs, which may damage or burn this product and the motor. Before restarting the normal operation after the operation using the emergency drive function, make sure that this product and the motor have no fault.

上正科技有限公司
購買、維修 此手冊零組件
電話：02-2746 6333
Email: service@repairtw.com
Line Id: @2222
www.repairtw.com

Emergency stop

- A safety backup such as an emergency brake must be provided for devices or equipment in a system to prevent hazardous conditions in case of failure of this product or an external device controlling this product.
- If a breaker on the input side of this product is tripped, the wiring must be checked for a fault (such as short circuit), and internal parts of this product for a damage, etc. Identify and remove the cause of the trip before resetting the tripped breaker (or before applying the power to this product again).
- When any protective function is activated, take an appropriate corrective action before resetting this product to resume the operation.

Maintenance, inspection and parts replacement

- Do not carry out a megger (insulation resistance) test on the control circuit of this product. Doing so will cause a failure.

Disposal

- This product must be treated as industrial waste.

General instruction

- For clarity purpose, illustrations in this Instruction Manual may be drawn with covers or safety guards removed. Ensure all covers and safety guards are properly installed prior to starting operation. For details on the PM motor, refer to the Instruction Manual of the PM motor.

上正科技有限公司
購買、維修 此手冊零組件
電話： 037-466333
Email: service@repairtw.com
Line id: @zzzz
www.repairtw.com

MEMO

上正科技有限公司
購買、維修 此手冊零組件
電話： 037-466333
Email: service@repairtw.com
Line id: @zzzz
www.repairtw.com

CHAPTER 1 INTRODUCTION

1.1 Product checking and accessories 17
1.2 Component names 19
1.3 Operation steps 21
1.4 About the related manuals 22

上正科技有限公司
購買、維修 此手冊零組件
電話： 037-466333
Email: service@repairtw.com
Line id: @zzzz
www.repairtw.com

1 INTRODUCTION

The contents described in this chapter must be read before using this product.
Always read the instructions before use.
For the separated converter type, refer to the "INTRODUCTION" in the FR-F802 (Separated Converter Type) Instruction Manual (Hardware).
For the IP55 compatible model, refer to the "INTRODUCTION" in the FR-F806 (IP55/UL Type 12 specification) Instruction Manual (Hardware).

◆ Abbreviations

Item	Description
DU	Operation panel (FR-DU08)
Operation panel	Operation panel (FR-DU08) and LCD operation panel (FR-LU08)
Parameter unit	Parameter unit (FR-PU07)
PU	Operation panel and parameter unit
Inverter	Mitsubishi Electric inverter FR-F800 series
Pr.	Parameter number (Number assigned to function)
PU operation	Operation using the PU (operation panel/parameter unit)
External operation	Operation using the control circuit signals
Combined operation	Combined operation using the PU (operation panel/parameter unit) and External operation
Mitsubishi Electric standard motor	SF-JR
Mitsubishi Electric constant-torque motor	SF-HRCA
Mitsubishi Electric IPM motor	MM-EFS motor and MM-THE4 motor
MM-EFS 1500 r/min spec.	MM-EFS motor with speed rating of 1500 r/min
MM-EFS 3000 r/min spec.	MM-EFS motor with speed rating of 3000 r/min

上正科技有限公司
購買、維修、供手冊零組件
電話： 037-466533
Email: service@repairtw.com
Line id: @rrr
www.repairtw.com

◆ Trademarks

- Microsoft and Visual C++ are registered trademarks of Microsoft Corporation in the United States and other countries.
- Ethernet is a registered trademark of Fuji Xerox Corporation in Japan.
- MODBUS is a registered trademark of SCHNEIDER ELECTRIC USA, INC.
- BACnet is a registered trademark of the American Society of Heating, Refrigerating and Air-Conditioning Engineers (ASHRAE).
- LONWORKS is a registered trademark of Echelon Corporation in the United States and other countries.
- Other company and product names herein are the trademarks and registered trademarks of their respective owners.

◆ Notes on descriptions in this Instruction Manual

- Connection diagrams in this Instruction Manual appear with the control logic of the input terminals as sink logic, unless otherwise specified. (For the control logic, refer to page 62.)

◆ Harmonic suppression guidelines

All the models of the inverters used by specific consumers are covered by "the Harmonic Suppression Guidelines for Consumers Who Receive High Voltage or Special High Voltage". (For details, refer to page 91.)

1.1 Product checking and accessories

Unpack the product and check the rating plate and the capacity plate of the inverter to ensure that the model agrees with the order and the product is intact.

◆ Inverter model

Symbol	Voltage class
2	200V class
4	400V class

Symbol	Structure, functionality
0	Standard model
2	Separated converter type
6	IP55 compatible model

Symbol	Description
00023 to 12120	SLD rated inverter current (A)
0.75K to 560K	LD rated inverter capacity (kW)

Symbol	Type*1
-1	FM
-2	CA

FR-F820-00046-1 □

Symbol	Circuit board coating (conforming to IEC60721-3-3 3C2/3S2)	Plated conductor
None	Without	Without
-60	With	Without
-06*2	With	With

上正科技有限公司
購買、維修 此手冊零組件
電話： 037-466333
Email: service@repairtw.com
Line id: @zzzz
www.repairtw.com

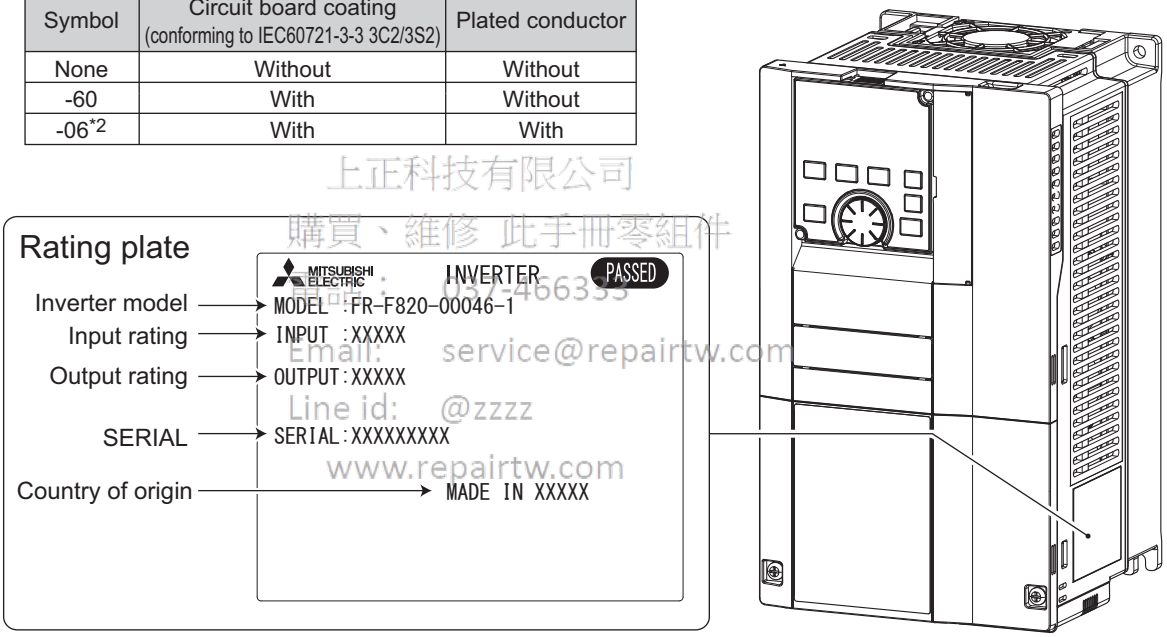

*1 Specification differs by the type. Major differences are shown in the following table.

Type	Monitor output	Initial setting				
		Built-in EMC filter	Control logic	Rated frequency	Pr.19 Base frequency voltage	Pr.570 Multiple rating setting
FM (terminal FM equipped model)	Terminal FM (pulse train output) Terminal AM (analog voltage output (0 to ±10 VDC))	OFF	Sink logic	60 Hz	9999 (same as the power supply voltage)	1 (LD rating)
CA (terminal CA equipped model)	Terminal CA (analog current output (0 to 20 mADC)) Terminal AM (analog voltage output (0 to ±10 VDC))	ON	Source logic	50 Hz	8888 (95% of the power supply voltage)	0 (SLD rating)

*2 Applicable for the FR-F820-00340(7.5K) or higher, and the FR-F840-00170(7.5K) or higher.

NOTE

- In this Instruction Manual, the inverter model name consists of the inverter rated current and the applicable motor capacity.
  Example) FR-F820-00046(0.75K)

◆ Accessory

- Fan cover fixing screws

  These screws are necessary for compliance with the EU Directives. (Refer to the Instruction Manual (Startup).)

Capacity	Screw size (mm)	Quantity
FR-F820-00105(2.2K) to FR-F820-00250(5.5K) FR-F840-00083(3.7K), FR-F840-00126(5.5K)	M3 × 35	1
FR-F820-00340(7.5K), FR-F820-00490(11K) FR-F840-00170(7.5K), FR-F840-00250(11K)	M3 × 35	2
FR-F820-00630(15K) to FR-F820-00930(22K) FR-F840-00310(15K) to FR-F840-00620(30K)	M4 × 40	2

- Eyebolt for hanging the inverter

Capacity	Eyebolt size	Quantity
FR-F840-04320(185K) to FR-F840-06830(315K)	M12	2

◆ SERIAL number

Rating plate example

□	○	○	○○○○○○
Symbol	Year	Month	Control number

SERIAL

The SERIAL consists of one symbol, two characters indicating the production year and month, and six characters indicating the control number.

The last digit of the production year is indicated as the Year, and the Month is indicated by 1 to 9, X (October), Y (November), or Z (December).

上正科技有限公司
購買、維修 此手冊零組件
電話： 037-466333
Email: service@repairtw.com
Line id: @zzzz
www.repairtw.com

1.2 Component names

Component names are as follows.

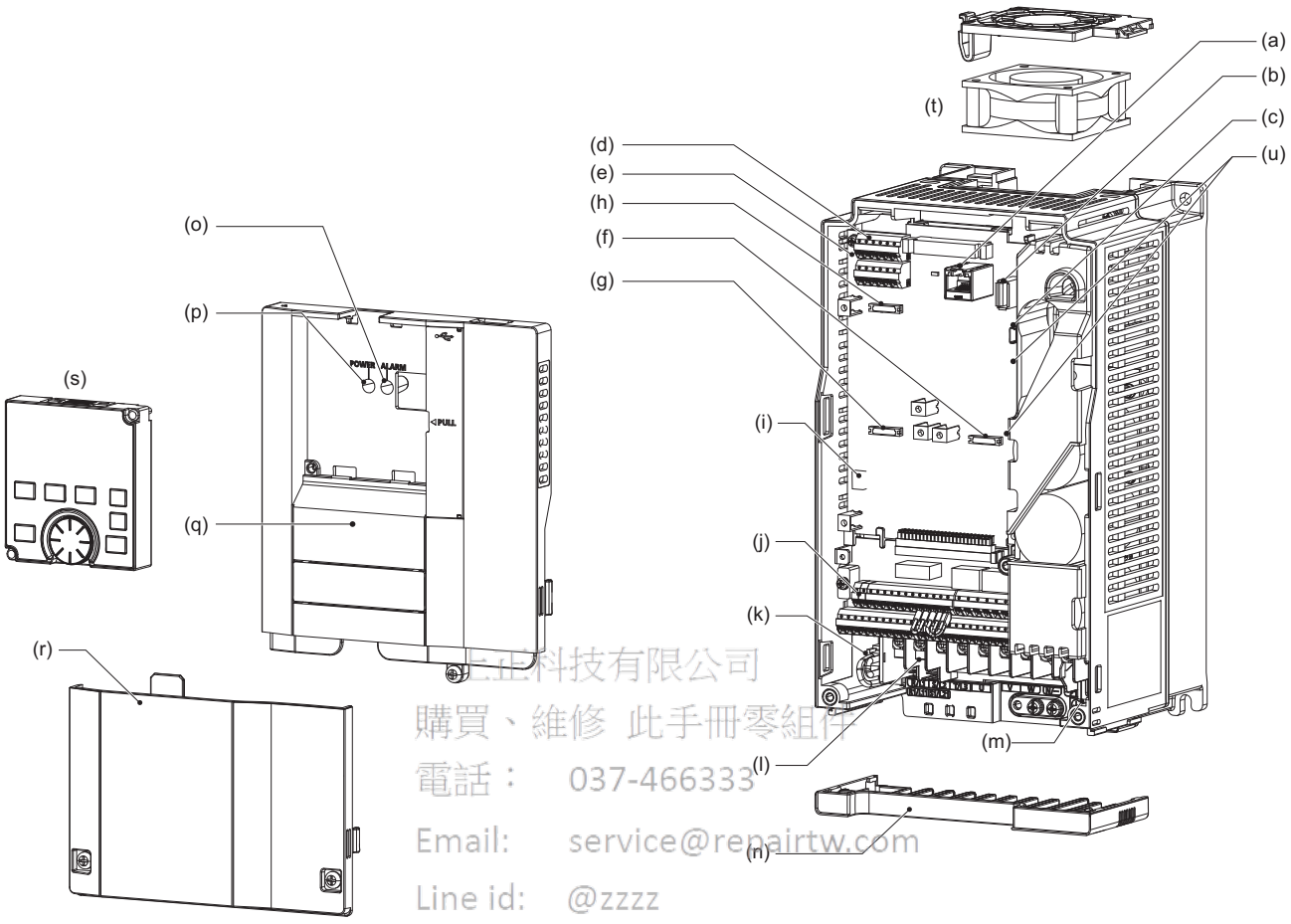

上正科技有限公司
購買、維修 此手冊零組件
電話： 037-466333
Email: service@repairtw.com
Line id: @zzzz
www.repairtw.com

Symbol	Name	Description	Refer to page
(a)	PU connector	Connector for the operation panel or the parameter unit. Also used for RS-485 communication.	73
(b)	USB A connector	Connector for a USB memory device.	74
(c)	USB mini B connector	Connector for a personal computer. Enables communication with FR Configurator2.	74
(d)	RS-485 terminals	Used for RS-485, MODBUS RTU, or BACnet communication.	75
(e)	Terminating resistor selection switch (SW1)	Select whether or not to use the terminating resistor for RS-485 communication.	75
(f)	Plug-in option connector 1	Connector for a plug-in option or a communication option.	Instruction Manual of the option
(g)	Plug-in option connector 2		
(h)	Plug-in option connector 3		
(i)	Voltage/current input selection switch assembly (SW2)	Select voltage or current for the input via terminals 2 and 4.	330
(j)	Control circuit terminal block	Connect cables for the control circuit.	58
(k)	EMC filter ON/OFF connector	Turn ON/OFF the switch to enable/disable the EMC filter.	88
(l)	Main circuit terminal block	Connect cables for the main circuit.	47
(m)	Charge lamp	Stays ON while the power is supplied to the main circuit.	48
(n)	Wiring cover	This cover is removable without unplugging cables (FR-F820-00930(22K) or lower, FR-F840-00620(30K) or lower)	50
(o)	Alarm lamp	Turns ON when the protective function of the inverter is activated.	48
(p)	Power lamp	Stays ON while the power is supplied to the control circuit (via terminals R1/L11 and S1/L21).	48
(q)	Front cover (upper side)	Remove this cover for the installation of the product, installation of a plug-in (communication) option, RS-485 terminal wiring, switching of the voltage/current input selection switch assembly (SW2), etc.	30
(r)	Front cover (lower side)	Remove this cover for wiring.	30
(s)	Operation panel (FR-DU08)	Used to operate or monitor the inverter.	106
(t)	Cooling fan	Cools the inverter (provided for FR-F820-00105(2.2K) or higher, FR-F840-00083(3.7K) or higher).	601
(u)	Switches (SW3 and SW4) for manufacturer setting	Do not change the initial setting (OFF).	—

上正科技有限公司
購買、維修數位電子備零組件
電話： 037-466333
Email: service@repairtw.com
Line id: @zzzz
www.repairtw.com

1.3 Operation steps

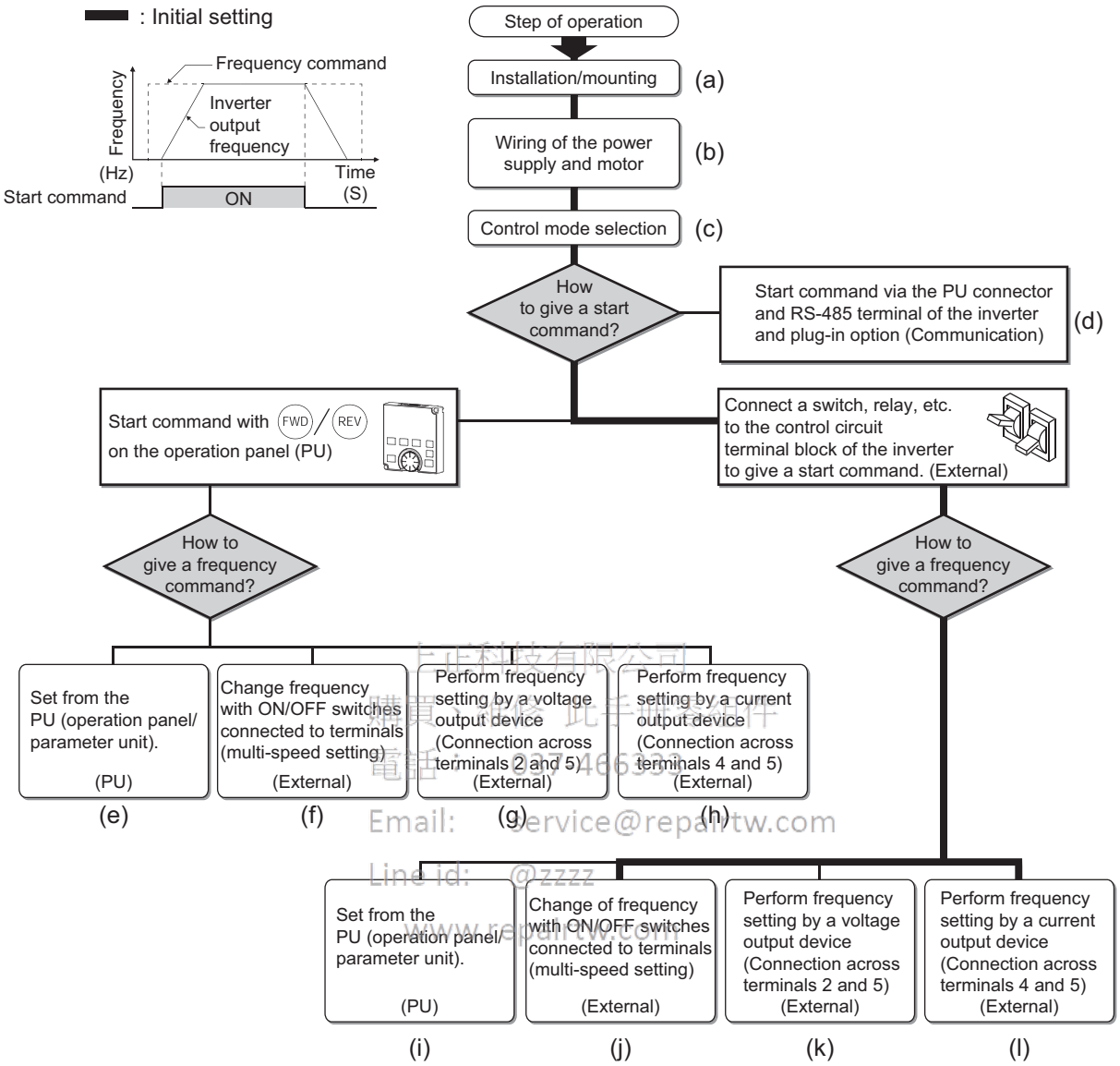

上正科技有限公司
購買 銷售 此手冊 軟件
電話: 0937466333
Email: service@repair-tw.com
Line id: @zzzz
www.repair-tw.com

Symbol	Overview	Refer to page
(a)	Install the inverter.	34
(b)	Perform wiring for the power supply and the motor.	48
(c)	Select the control method (V/F control, Advanced magnetic flux vector control, or PM motor control).	169
(d)	Give the start command via communication.	473
(e)	Give both the start and frequency commands from the PU. (PU operation mode)	116
(f)	Give the start command from the PU and the frequency command via terminals RH, RM, and RL. (External/PU combined operation mode 2)	118
(g)	Give the start command from the PU and the frequency command by voltage input via terminal 2. (External/PU combined operation mode 2)	119
(h)	Give the start command from the PU and the frequency command by current input via terminal 4. (External/PU combined operation mode 2)	120
(i)	Give the start command via terminal STF or STR and the frequency command from the PU. (External/PU combined operation mode 1)	122
(j)	Give the start command via terminal STF or STR and the frequency command via terminals RH, RM, and RL. (External operation mode)	123
(k)	Give the start command via terminal STF or STR and the frequency command by voltage input via terminal 2. (External operation mode)	124
(l)	Give the start command via terminal STF or STR and the frequency command by current input via terminal 4. (External operation mode)	127

1.4 About the related manuals

The manuals related to FR-F800 are as follows.

Manual name	Manual number
FR-F800 Instruction Manual (Startup)	IB-0600545
FR-F802 (Separated Converter Type) Instruction Manual (Hardware)	IB-0600550ENG
FR-CC2 (Converter unit) Instruction Manual	IB-0600543ENG
FR-F806 (IP55/UL Type 12 specification) Instruction Manual (Hardware)	IB-0600676ENG
FR Configurator2 Instruction Manual	IB-0600516ENG
FR-A800/F800 PLC Function Programming Manual	IB-0600492ENG
FR-A800/F800 Safety Stop Function Instruction Manual	BCN-A23228-001

上正科技有限公司
購買、維修 此手冊零組件
電話： 037-466333
Email: service@repairtw.com
Line id: @zzzz
www.repairtw.com

CHAPTER 2 INSTALLATION AND WIRING

2.1 Peripheral devices 24
2.2 Removal and reinstallation of the operation panel or the front covers 30
2.3 Installation of the inverter and enclosure design 34
2.4 Terminal connection diagrams 43
2.5 Main circuit terminals 47
2.6 Control circuit 58
2.7 Communication connectors and terminals 73
2.8 Connection of stand-alone option units 76

上正科技有限公司
購買、維修 此手冊零組件
電話： 037-466333
Email: service@repairtw.com
Line id: @zzzz
www.repairtw.com

2 INSTALLATION AND WIRING

This chapter explains the installation and the wiring of this product.
Always read the instructions before use.
For the separated converter type, refer to the "INSTALLATION AND WIRING" in the FR-F802 (Separated Converter Type) Instruction Manual (Hardware).
For the IP55 compatible model, refer to the "INSTALLATION AND WIRING" in the FR-F806 (IP55/UL Type 12 specification) Instruction Manual (Hardware).

2.1 Peripheral devices

2.1.1 Inverter and peripheral devices

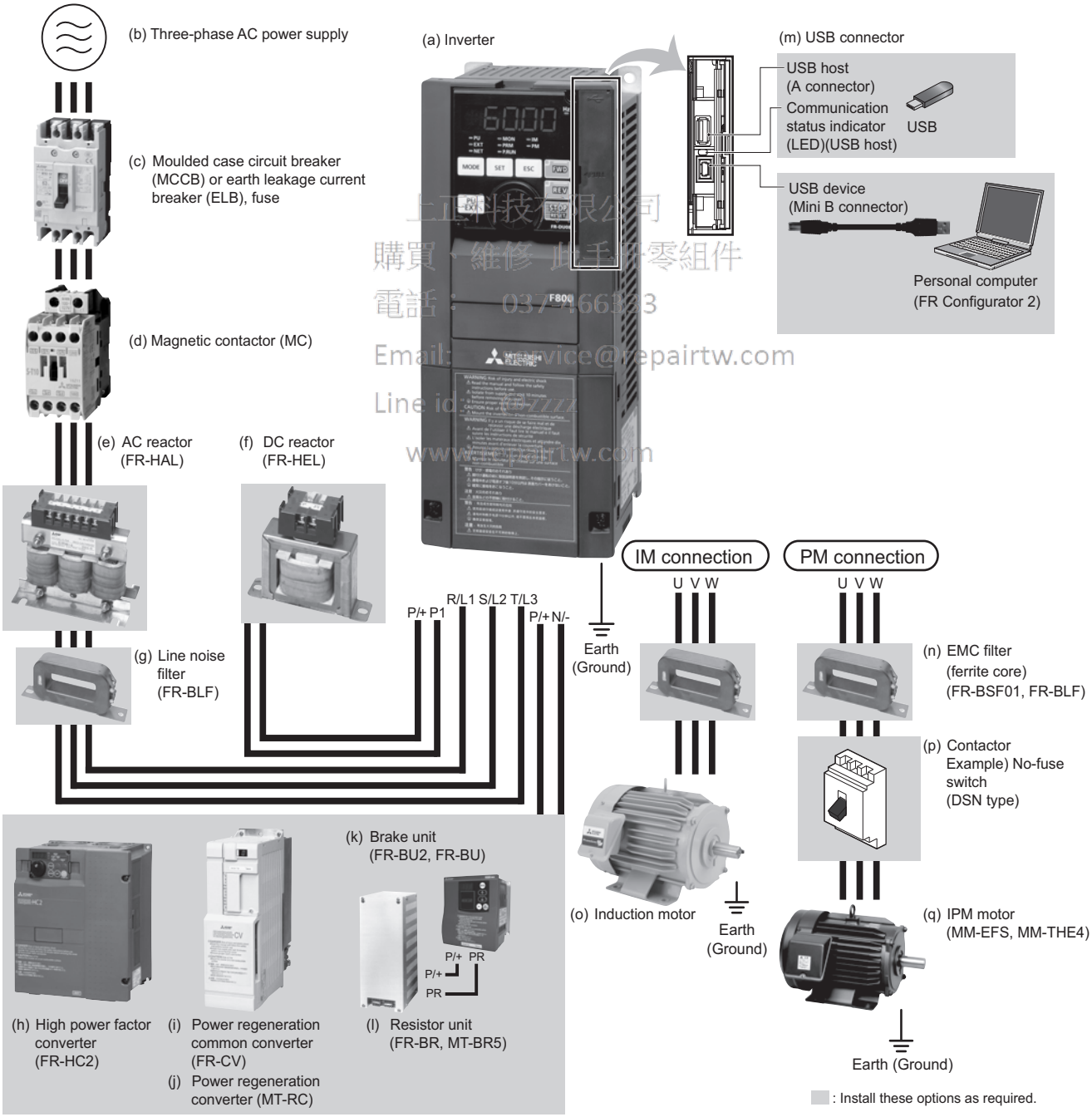

上巨科技有限公司
購買、維修 此手冊零組件
電話：0374663 3
Email: service@repairtw.com
Line id: [illegible]
www.repairtw.com

Symbol	Name	Overview	Refer to page
(a)	Inverter (FR-F800)	The life of the inverter is influenced by the surrounding air temperature. The surrounding air temperature should be as low as possible within the permissible range. This must be noted especially when the inverter is installed in an enclosure. Incorrect wiring may lead to damage of the inverter. The control signal lines must be kept fully away from the main circuit lines to protect them from noise. The built-in EMC filter can reduce the noise.	34,43,88
(b)	Three-phase AC power supply	Must be within the permissible power supply specifications of the inverter.	612
(c)	Molded case circuit breaker (MCCB), earth leakage circuit breaker (ELB), or fuse	Must be selected carefully since an inrush current flows in the inverter at power ON.	26
(d)	Magnetic contactor (MC)	Install this to ensure safety. Do not use this to start and stop the inverter. Doing so will shorten the life of the inverter.	96
(e)	AC reactor (FR-HAL)	Install this to suppress harmonics and to improve the power factor. An AC reactor (FR-HAL) (option) is required when installing the inverter near a large power supply system (1000 kVA or more). Under such condition, the inverter may be damaged if you do not use a reactor. Select a reactor according to the applied motor capacity.	95
(f)	DC reactor (FR-HEL)	Install this to suppress harmonics and to improve the power factor. Select a reactor according to the applied motor capacity. For the FR-F820-03160(75K) or higher and the FR-F840-01800(75K) or higher, always connect the FR-HEL. When using the DC reactor with the FR-F820-02330(55K) or lower, or the FR-F840-01160(55K) or lower, remove the jumper across terminals P/+ and P1 before connecting the DC reactor to the inverter.	95
(g)	Noise filter (FR-BLF)	The FR-F820-02330(55K) or lower and the FR-F840-01160(55K) or lower are equipped with the common mode choke.	86
(h)	High power factor converter (FR-HC2)	Suppresses the power supply harmonics significantly. Install this as required.	79
(i)	Power regeneration common converter (FR-CV*1)	Provides a large braking capability. Install this as required.	80
(j)	Power regeneration converter (MT-RC*2)		81
(k)	Brake unit (FR-BU2/FR-BU*1/BU*1)	Allows the inverter to provide the optimal regenerative braking capability. Install this as required.	76
(l)	Resistor unit (FR-BR*1/MT-BR5*2)		
(m)	USB connection	Connect between the inverter and a personal computer with a USB (ver. 1.1) cable. Use a USB memory device to copy parameter settings or use the trace function.	74
(n)	Noise filter (FR-BSF01/FR-BLF)	Install this to reduce the electromagnetic noise generated from the inverter. The noise filter is effective in the range from about 0.5 to 5 MHz. A wire should be wound four turns at maximum.	86
(o)	Induction motor	Connect a squirrel-cage induction motor.	—
(p)	Contactor Example) No-fuse switch (DSN type)	Connect this for an application where a PM motor is driven by the load even while the inverter power is OFF. Do not open or close the contactor while the inverter is running (outputting).	—
(q)	IPM motor (MM-EFS/MM-THE4)	Use the specified motor. An IPM motor cannot be driven by the commercial power supply.	615

*1 Compatible with the FR-F820-02330(55K) or lower and the FR-F840-01160(55K) or lower.
*2 Compatible with the FR-F820-03160(75K) or higher and the FR-F840-01800(75K) or higher.

上正機電商城 購買、維修、此手冊零組件
電話：037-466333
Email: service@repairtw.com
Line id: @3zzz
www.repairtw.com

NOTE

- To prevent an electric shock, always earth (ground) the motor and inverter.
- Do not install a power factor correction capacitor, surge suppressor, or capacitor type filter on the inverter's output side. Doing so will cause the inverter shut off or damage the capacitor or surge suppressor. If any of the above devices is connected, immediately remove it. When installing a molded case circuit breaker on the output side of the inverter, contact the manufacturer of the molded case circuit breaker.
- Electromagnetic wave interference:
  The input/output (main circuit) of the inverter includes high frequency components, which may interfere with the communication devices (such as AM radios) used near the inverter. To minimize interference, enabling the built-in EMC filter or installing an external EMC filters is effective. (Refer to page 88.)
- For details of options and peripheral devices, refer to the respective Instruction Manual.
- A PM motor cannot be driven by the commercial power supply.
- A PM motor is a motor with permanent magnets embedded inside. High voltage is generated at the motor terminals while the motor is running. Before closing the contactor at the output side, make sure that the inverter power is ON and the motor is stopped.

2.1.2 Peripheral devices

Check the model of the inverter you purchased. Appropriate peripheral devices must be selected according to the capacity. Refer to the following table for right selection.

◆ LD rating (Pr.570 Multiple rating setting = "1")

- 200 V class

Motor output (kW)	Inverter model	Molded case circuit breaker (MCCB) / earth leakage circuit breaker (ELB) (type NF or NV)		Magnetic contactor (MC) for installation on the inverter input side	
		Power factor improving AC/DC reactor		Power factor improving AC/DC reactor	
		Not installed	Installed	Not installed	Installed
0.75	FR-F820-00046(0.75K)	10 A	10 A	S-T10	S-T10
1.5	FR-F820-00077(1.5K)	15 A	15 A	S-T10	S-T10
2.2	FR-F820-00105(2.2K)	20 A	15 A	S-T10	S-T10
3.7	FR-F820-00167(3.7K)	30 A	30 A	S-T21	S-T10
5.5	FR-F820-00250(5.5K)	50 A	40 A	S-T25	S-T21
7.5	FR-F820-00340(7.5K)	60 A	50 A	S-T35	S-T25
11	FR-F820-00490(11K)	75 A	75 A	S-T35	S-T35
15	FR-F820-00630(15K)	125 A	100 A	S-T50	S-T50
18.5	FR-F820-00770(18.5K)	150 A	125 A	S-T65	S-T50
22	FR-F820-00930(22K)	175 A	125 A	S-T100	S-T65
30	FR-F820-01250(30K)	225 A	150 A	S-T100	S-T100
37	FR-F820-01540(37K)	250 A	200 A	S-N150	S-N125
45	FR-F820-01870(45K)	300 A	225 A	S-N180	S-N150
55	FR-F820-02330(55K)	400 A	300 A	S-N220	S-N180
75	FR-F820-03160(75K)	—	400 A	—	S-N300
90	FR-F820-03800(90K)	—	400 A	—	S-N300
110	FR-F820-04750(110K)	—	500 A	—	S-N400

專業 維修 此手機專組件
電話： 037 466333
Email: service@repairtw.com
Line id: @2222
www.repairtw.com

NOTE

- Select an MCCB according to the power supply capacity.
- Install one MCCB per inverter. For the use in the United States or Canada, refer to "Instructions for UL and cUL" in the Instruction Manual (Startup) or Instruction Manual (Hardware) to select an appropriate fuse or MCCB.

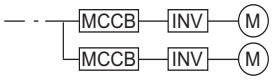

- When the inverter capacity is larger than the motor capacity, select the MCCB and the MC according to the inverter model, and select cables and the reactor according to the motor output.
- When the breaker installed on the inverter input side is shut off, check for the wiring fault (short circuit), damage to internal parts of the inverter etc. The cause of the output shutoff must be identified and removed before turning ON the power of the breaker.
- The matrix shows the MC selected according to the standards of Japan Electrical Manufacturers' Association (JEM standards) for AC-1 class. The electrical durability of magnetic contactor is 500,000 times. When the MC is used for emergency stops during motor driving, the electrical durability is 25 times. If using the MC for emergency stop during motor driving, select the MC for the inverter input current according to the rated current against JEM 1038 standards for AC-3 class. When installing an MC on the inverter output side to switch to the commercial-power supply operation while running a general-purpose motor, select the MC for the rated motor current according to the rated current against JEM 1038 standards for AC-3 class.
- When the inverter capacity is larger than the motor capacity, select the MCCB and the MC according to the inverter model, and select cables and the reactor according to the motor output.

- 400 V class

Motor output (kW)	Inverter model	Molded case circuit breaker (MCCB) / earth leakage circuit breaker (ELB) (type NF or NV)		Magnetic contactor (MC) for installation on the inverter input side	
		Power factor improving AC/DC reactor		Power factor improving AC/DC reactor	
		Not installed	Installed	Not installed	Installed
0.75	FR-F840-00023(0.75K)	5 A	5 A	S-T10	S-T10
1.5	FR-F840-00038(1.5K)	10 A	10 A	S-T10	S-T10
2.2	FR-F840-00052(2.2K)	10 A	10 A	S-T10	S-T10
3.7	FR-F840-00083(3.7K)	20 A	15 A	S-T10	S-T10
5.5	FR-F840-00126(5.5K)	30 A	20 A	S-T21	S-T12
7.5	FR-F840-00170(7.5K)	30 A	30 A	S-T21	S-T21
11	FR-F840-00250(11K)	50 A	40 A	S-T21	S-T21
15	FR-F840-00310(15K)	60 A	50 A	S-T35	S-T21
18.5	FR-F840-00380(18.5K)	75 A	60 A	S-T35	S-T35
22	FR-F840-00470(22K)	100 A	75 A	S-T35	S-T35
30	FR-F840-00620(30K)	125 A	100 A	S-T50	S-T50
37	FR-F840-00770(37K)	150 A	100 A	S-T65	S-T50
45	FR-F840-00930(45K)	175 A	125 A	S-T100	S-T65
55	FR-F840-01160(55K)	200 A	150 A	S-T100	S-T100
75	FR-F840-01800(75K)	—	200 A	—	S-T100
90	FR-F840-02160(90K)	—	225 A	—	S-N150
110	FR-F840-02600(110K)	—	225 A	—	S-N180
132	FR-F840-03250(132K)	—	350 A	—	S-N220
150	FR-F840-03610(160K)	—	400 A	—	S-N300
160	FR-F840-03610(160K)	—	400 A	—	S-N300
185	FR-F840-04320(185K)	—	400 A	—	S-N300
220	FR-F840-04810(220K)	—	500 A	—	S-N400
250	FR-F840-05470(250K)	—	600 A	—	S-N600
280	FR-F840-06100(280K)	—	600 A	—	S-N600
315	FR-F840-06830(315K)	—	700 A	—	S-N600

上正科技有限公司
購買、維修、手冊零組件
電話： 03-466333
Email: service@repairtw.com
Line id: @4777
www.repairtw.com

NOTE

- Select an MCCB according to the power supply capacity.
- Install one MCCB per inverter. For the use in the United States or Canada, refer to "Instructions for UL and cUL" in the Instruction Manual (Startup) or Instruction Manual (Hardware) to select an appropriate fuse or MCCB.

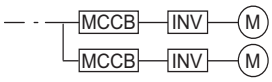

- When the inverter capacity is larger than the motor capacity, select the MCCB and the MC according to the inverter model, and select cables and the reactor according to the motor output.
- When the breaker installed on the inverter input side is shut off, check for the wiring fault (short circuit), damage to internal parts of the inverter etc. The cause of the output shutoff must be identified and removed before turning ON the power of the breaker.
- The matrix shows the MC selected according to the standards of Japan Electrical Manufacturers' Association (JEM standards) for AC-1 class. The electrical durability of magnetic contactor is 500,000 times. When the MC is used for emergency stops during motor driving, the electrical durability is 25 times. If using the MC for emergency stop during motor driving, select the MC for the inverter input current according to the rated current against JEM 1038 standards for AC-3 class. When installing an MC on the inverter output side to switch to the commercial-power supply operation while running a general-purpose motor, select the MC for the rated motor current according to the rated current against JEM 1038 standards for AC-3 class.

◆ SLD rating (Pr.570 Multiple rating setting = "0")

- 200 V class

Motor output (kW)	Inverter model	Molded case circuit breaker (MCCB) / earth leakage circuit breaker (ELB) (type NF or NV)		Magnetic contactor (MC) for installation on the inverter input side	
		Power factor improving AC/DC reactor		Power factor improving AC/DC reactor	
		Not installed	Installed	Not installed	Installed
0.75	FR-F820-00046(0.75K)	10 A	10 A	S-T10	S-T10
1.5	FR-F820-00077(1.5K)	15 A	15 A	S-T10	S-T10
2.2	FR-F820-00105(2.2K)	20 A	15 A	S-T10	S-T10
3.7	FR-F820-00167(3.7K)	30 A	30 A	S-T21	S-T10
5.5	FR-F820-00250(5.5K)	50 A	40 A	S-T25	S-T21
7.5	FR-F820-00340(7.5K)	75 A	50 A	S-T35	S-T35
11	FR-F820-00490(11K)	100 A	75 A	S-T50	S-T35
15	FR-F820-00630(15K)	125 A	100 A	S-T65	S-T50
18.5	FR-F820-00770(18.5K)	150 A	125 A	S-T65	S-T50
22	FR-F820-00930(22K)	175 A	150 A	S-T100	S-T65
30	FR-F820-01250(30K)	225 A	175 A	S-N150	S-T100
37	FR-F820-01540(37K)	300 A	225 A	S-N150	S-N150
45	FR-F820-01870(45K)	350 A	250 A	S-N180	S-N150
55	FR-F820-02330(55K)	400 A	350 A	S-N220	S-N180
75	FR-F820-03160(75K)	—	500 A	—	S-N300
90	FR-F820-03800(90K)	—	500 A	—	S-N400
110	FR-F820-03800(90K)	—	500 A	—	S-N400
132	FR-F820-04750(110K)	—	600 A	—	S-N600

上正科技有限公司
購買、維修、手冊零組件
電話： 03-466333
Email: service@repairtw.com
Line id: @zzzz
www.repairtw.com

NOTE

- Select an MCCB according to the power supply capacity.
- Install one MCCB per inverter. For the use in the United States or Canada, refer to "Instructions for UL and cUL" in the Instruction Manual (Startup) or Instruction Manual (Hardware) to select an appropriate fuse or MCCB.

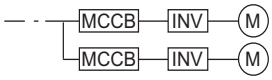

- When the inverter capacity is larger than the motor capacity, select the MCCB and the MC according to the inverter model, and select cables and the reactor according to the motor output.
- When the breaker installed on the inverter input side is shut off, check for the wiring fault (short circuit), damage to internal parts of the inverter etc. The cause of the output shutoff must be identified and removed before turning ON the power of the breaker.
- The matrix shows the MC selected according to the standards of Japan Electrical Manufacturers' Association (JEM standards) for AC-1 class. The electrical durability of magnetic contactor is 500,000 times. When the MC is used for emergency stops during motor driving, the electrical durability is 25 times. If using the MC for emergency stop during motor driving, select the MC for the inverter input current according to the rated current against JEM 1038 standards for AC-3 class. When installing an MC on the inverter output side to switch to the commercial-power supply operation while running a general-purpose motor, select the MC for the rated motor current according to the rated current against JEM 1038 standards for AC-3 class.

- 400 V class

Motor output (kW)	Inverter model	Molded case circuit breaker (MCCB) / earth leakage circuit breaker (ELB) (type NF or NV)		Magnetic contactor (MC) for installation on the inverter input side	
		Power factor improving AC/DC reactor		Power factor improving AC/DC reactor	
		Not installed	Installed	Not installed	Installed
0.75	FR-F840-00023(0.75K)	5 A	5 A	S-T10	S-T10
1.5	FR-F840-00038(1.5K)	10 A	10 A	S-T10	S-T10
2.2	FR-F840-00052(2.2K)	10 A	10 A	S-T10	S-T10
3.7	FR-F840-00083(3.7K)	20 A	15 A	S-T10	S-T10
5.5	FR-F840-00126(5.5K)	30 A	20 A	S-T21	S-T12
7.5	FR-F840-00170(7.5K)	30 A	30 A	S-T21	S-T21
11	FR-F840-00250(11K)	50 A	40 A	S-T21	S-T21
15	FR-F840-00310(15K)	60 A	50 A	S-T35	S-T21
18.5	FR-F840-00380(18.5K)	75 A	60 A	S-T35	S-T35
22	FR-F840-00470(22K)	100 A	75 A	S-T35	S-T35
30	FR-F840-00620(30K)	125 A	100 A	S-T50	S-T50
37	FR-F840-00770(37K)	150 A	125 A	S-T65	S-T50
45	FR-F840-00930(45K)	175 A	150 A	S-T100	S-T65
55	FR-F840-01160(55K)	200 A	175 A	S-N150	S-T100
75	FR-F840-01800(75K)	—	225 A	—	S-N150
90	FR-F840-01800(75K)	—	225 A	—	S-N150
110	FR-F840-02160(90K)	—	225 A	—	S-N180
132	FR-F840-02600(110K)	—	350 A	—	S-N220
150	FR-F840-03250(132K)	—	400 A	—	S-N300
160	FR-F840-03250(132K)	—	400 A	—	S-N300
185	FR-F840-03610(160K)	—	400 A	—	S-N300
220	FR-F840-04320(185K)	—	500 A	—	S-N400
250	FR-F840-04810(220K)	—	600 A	—	S-N600
280	FR-F840-05470(250K)	—	600 A	—	S-N600
315	FR-F840-06100(280K)	—	700 A	—	S-N600
355	FR-F840-06830(315K)	—	800 A	—	S-N800

上正科技有限公司
購買、維修、出手冊零組件
電話： 037-466333
Email: service@repairtw.com
Line Id: @2222
www.repairtw.com

NOTE

- Select an MCCB according to the power supply capacity.
- Install one MCCB per inverter. For the use in the United States or Canada, refer to "Instructions for UL and cUL" in the Instruction Manual (Startup) or Instruction Manual (Hardware) to select an appropriate fuse or MCCB.

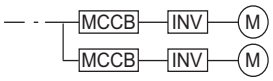

- When the inverter capacity is larger than the motor capacity, select the MCCB and the MC according to the inverter model, and select cables and the reactor according to the motor output.
- When the breaker installed on the inverter input side is shut off, check for the wiring fault (short circuit), damage to internal parts of the inverter etc. The cause of the output shutoff must be identified and removed before turning ON the power of the breaker.
- The matrix shows the MC selected according to the standards of Japan Electrical Manufacturers' Association (JEM standards) for AC-1 class. The electrical durability of magnetic contactor is 500,000 times. When the MC is used for emergency stops during motor driving, the electrical durability is 25 times. If using the MC for emergency stop during motor driving, select the MC for the inverter input current according to the rated current against JEM 1038 standards for AC-3 class. When installing an MC on the inverter output side to switch to the commercial-power supply operation while running a general-purpose motor, select the MC for the rated motor current according to the rated current against JEM 1038 standards for AC-3 class.

2.2 Removal and reinstallation of the operation panel or the front covers

◆ Removal and reinstallation of the operation panel

- Loosen the two screws on the operation panel. (These screws cannot be removed.)
- Press the upper edge of the operation panel while pulling out the operation panel.

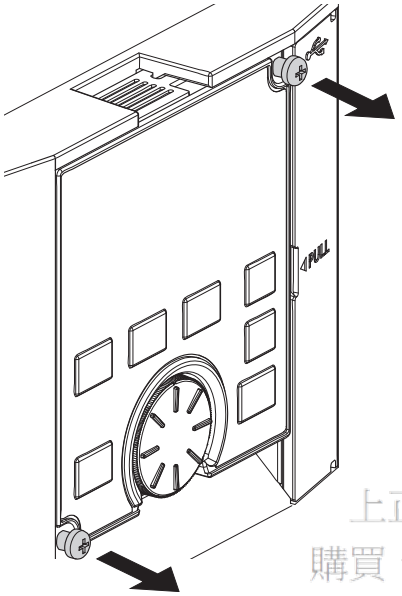

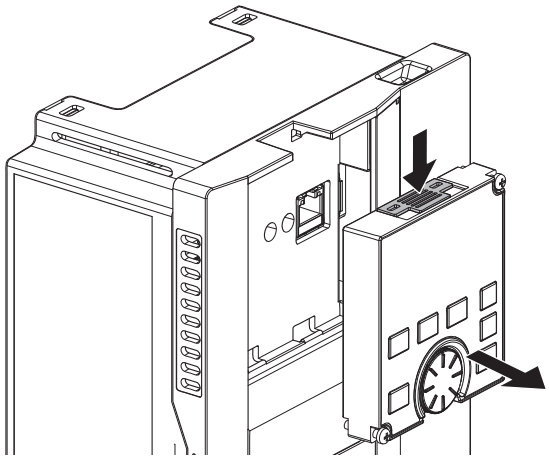

上正科技有限公司
購買、維修 此手冊零組件
電話： 037-466333
Email: service@repairtw.com
Line Id: @2222
www.repairtw.com

To reinstall the operation panel, align its connector on the back with the PU connector of the inverter, and insert the operation panel. After confirming that the operation panel is fit securely, tighten the screws. (Tightening torque: 0.40 to 0.45 N·m)

◆ Removal of the front cover (lower side) (FR-F820-01540(37K) or lower, FR-F840-00770(37K) or lower)

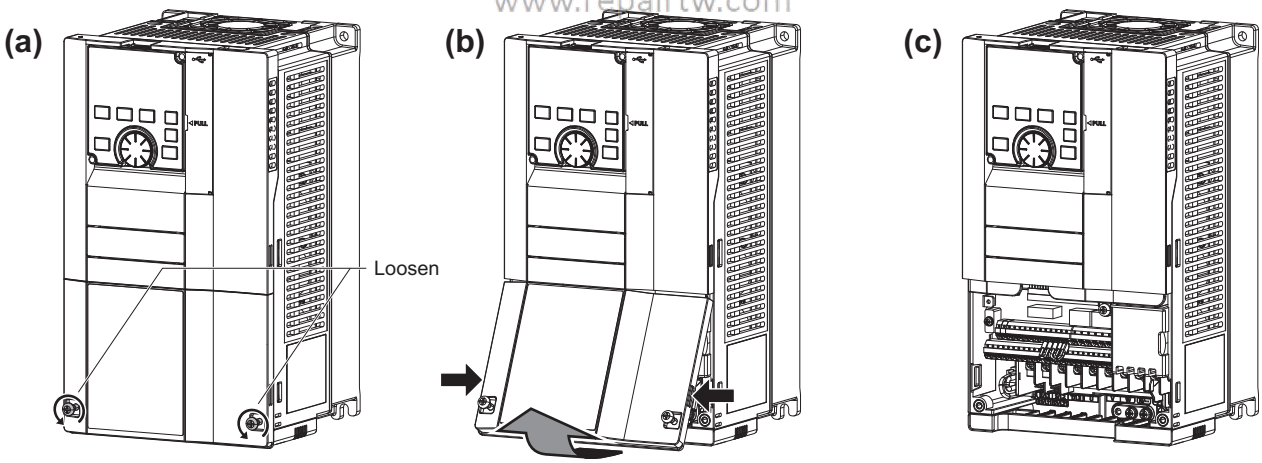

(a) Loosen the screws on the front cover (lower side). (These screws cannot be removed.)
(b) While holding the areas around the installation hooks on the sides of the front cover (lower side), pull out the front cover (lower side) using its upper side as a support.
(c) With the front cover (lower side) removed, wiring of the main circuit terminals and control circuit terminals can be performed.

◆ Removal of the front cover (upper side) (FR-F820-01540(37K) or lower, FR-F840-00770(37K) or lower)

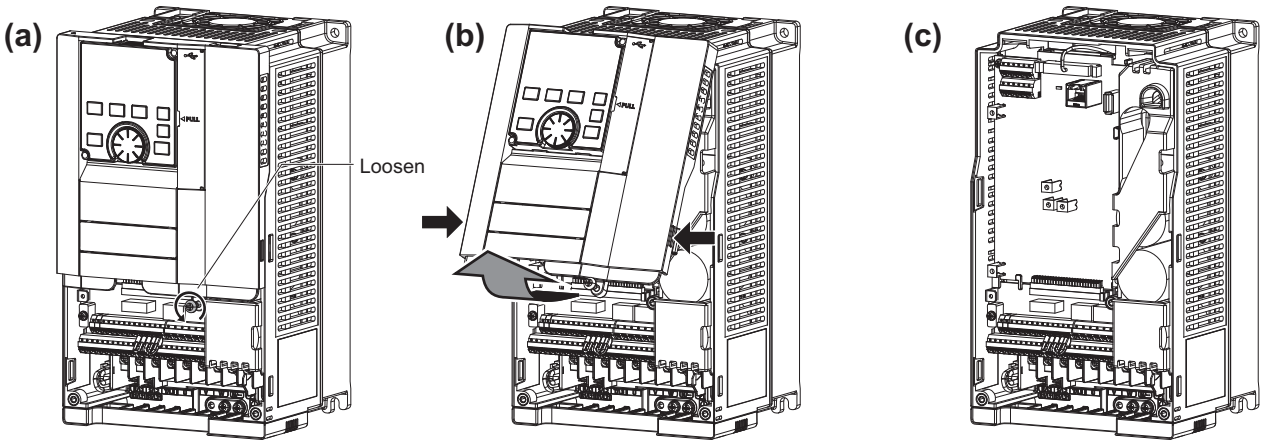

(a) With the front cover (lower side) removed, loosen the mounting screws on the front cover (upper side). (These screws cannot be removed.)
(FR-F820-00340(7.5K) to FR-F820-01540(37K) and FR-F840-00170(7.5K) to FR-F840-00770(37K) have two mounting screws.)

(b) While holding the areas around the installation hooks on the sides of the front cover (upper side), pull out the cover using its upper side as a support.

(c) With the front cover (upper side) removed, wiring of the RS-485 terminals and installation of the plug-in option can be performed.

上正科技有限公司
購買、維修 此手冊零組件
電話： 037-466333
Email: service@repairtw.com
Line: @repairtw
www.repairtw.com

◆ Reinstallation of the front covers (FR-F820-01540(37K) or lower, FR-F840-00770(37K) or lower)

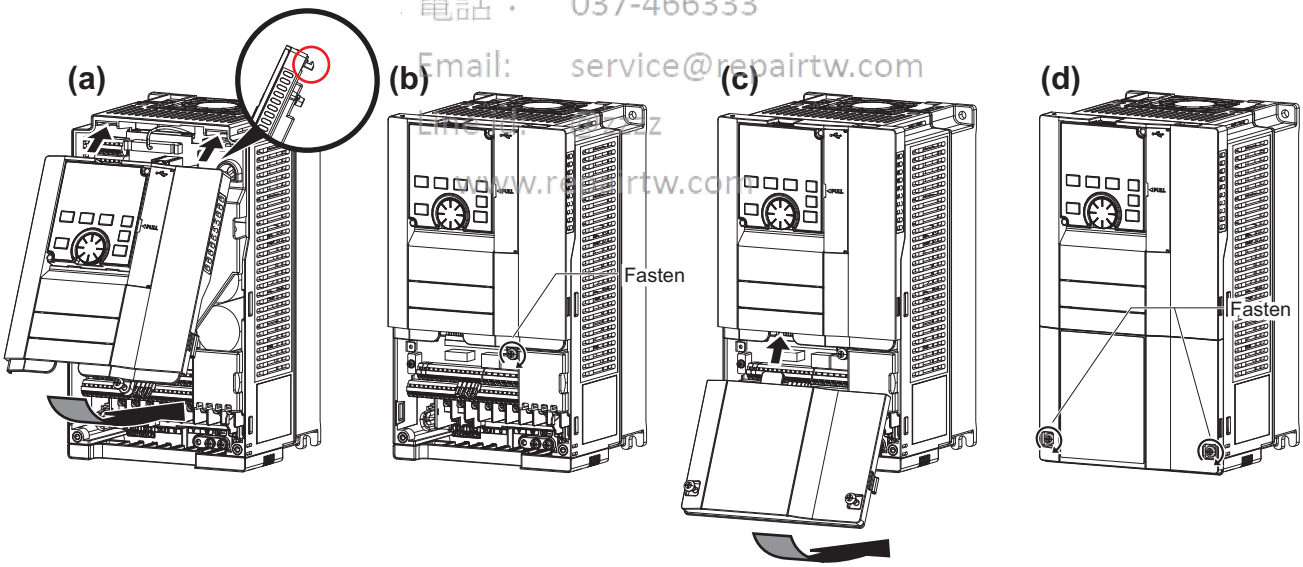

(a) Insert the upper hooks of the front cover (upper side) into the sockets of the inverter.
Securely install the front cover (upper side) to the inverter by fixing the hooks on the sides of the cover into place.

(b) Tighten the mounting screw(s) at the lower part of the front cover (upper side). (FR-F820-00340(7.5K) to FR-F820-01540(37K) and FR-F840-00170(7.5K) to FR-F840-00770(37K) have two mounting screws.)

(c) Install the front cover (lower side) by inserting the upper hook into the socket of the front cover (upper side).

(d) Tighten the mounting screws at the lower part of the front cover (lower side).

NOTE

- When installing the front cover (upper side), fit the connector of the operation panel securely along the guides of the PU connector.

◆ Removal of the front cover (lower side) (FR-F820-01870(45K) or higher, FR-F840-00930(45K) or higher)

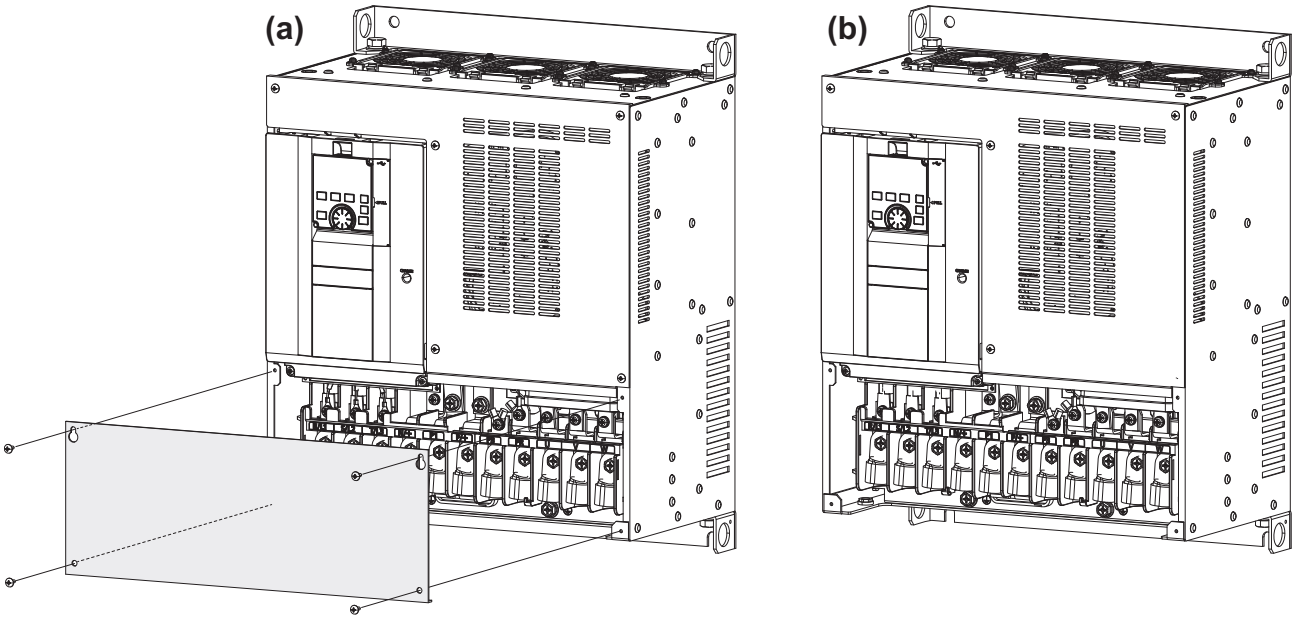

(a) When the mounting screws are removed, the front cover (lower side) can be removed.
(b) With the front cover (lower side) removed, wiring of the main circuit terminals can be performed.

◆ Removal of the front cover (upper side) (FR-F820-01870(45K) or higher, FR-F840-00930(45K) or higher)

購買、維修 此手冊零組件
電話： 037-466333
Email: service@repairtw.com

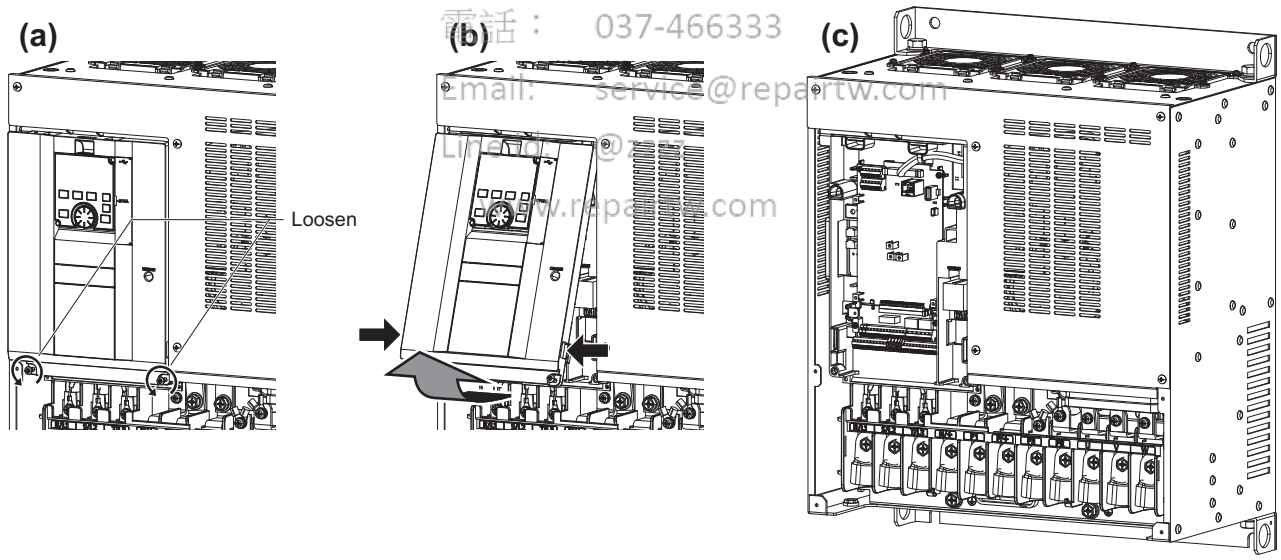

(a) With the front cover (lower side) removed, loosen the mounting screws on the front cover (upper side). (These screws cannot be removed.)
(b) While holding the areas around the installation hooks on the sides of the front cover (upper side), pull out the cover using its upper side as a support.
(c) With the front cover (upper side) removed, wiring of the RS-485 terminals and installation of the plug-in option can be performed.

◆ Reinstallation of the front covers (FR-F820-01870(45K) or higher, FR-F840-00930(45K) or higher)

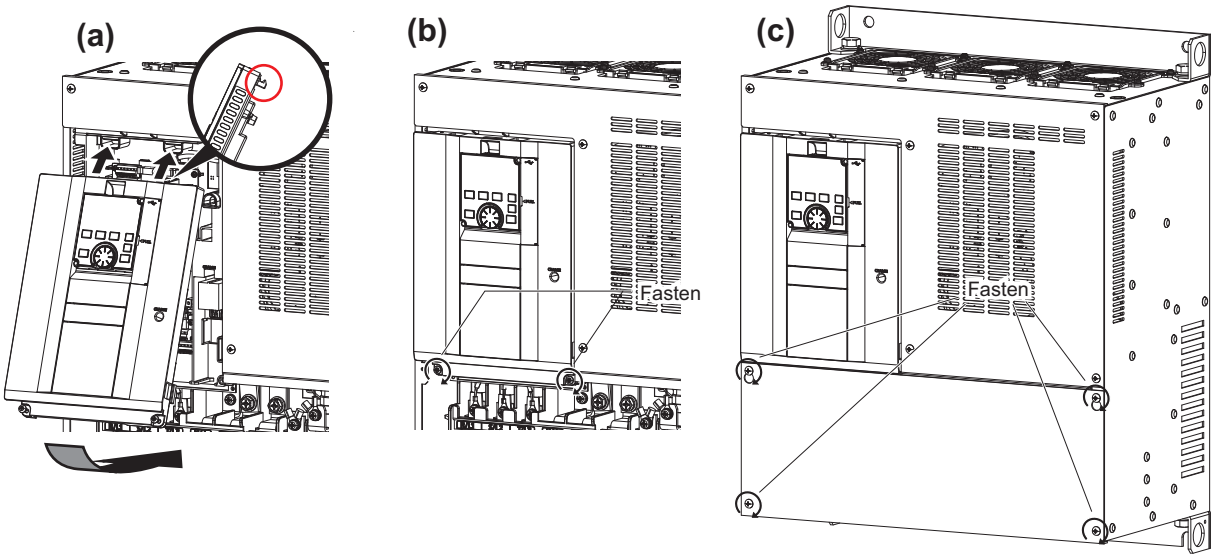

(a) Insert the upper hooks of the front cover (upper side) into the sockets of the inverter.
Securely install the front cover (upper side) to the inverter by fixing the hooks on the sides of the cover into place.

(b) Tighten the mounting screw(s) at the lower part of the front cover (upper side).

(c) Fasten the front cover (lower side) with the mounting screws.

NOTE

- Fully make sure that the front cover has been reinstalled securely. Always tighten the installation screws of the front cover.

上正科技有限公司
購買 維修 此手冊零組件
電話： 037-466333
Email: service@repairtw.com
Line id: @zzzz
www.repairtw.com

2.3 Installation of the inverter and enclosure design

When designing or manufacturing an inverter enclosure, determine the structure, size, and device layout of the enclosure by fully considering the conditions such as heat generation of the contained devices and the operating environment. An inverter unit uses many semiconductor devices. To ensure higher reliability and long period of operation, operate the inverter in the ambient environment that completely satisfies the equipment specifications.

2.3.1 Inverter installation environment

The following table lists the standard specifications of the inverter installation environment. Using the inverter in an environment that does not satisfy the conditions deteriorates the performance, shortens the life, and causes a failure. Refer to the following points, and take adequate measures.

◆ Standard environmental specifications of the inverter

Item		Description	
Surrounding air temperature	LD	-10 to +50°C (non-freezing)	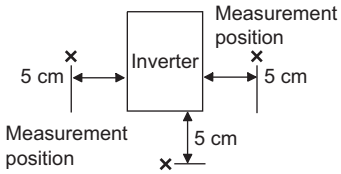
	SLD	-10 to +40°C (non-freezing)	
Ambient humidity		With circuit board coating (conforming to class 3C2/3S2 in IEC 60721-3-3): 95% RH or less (non-condensing) Without circuit board coating: 90% RH or less (non-condensing)	
Storage temperature		-20 to +65°C*1	
Atmosphere		Indoors (free from corrosive gas, flammable gas, oil mist, dust and dirt)	
Altitude		Maximum 2500 m*2	
Vibration		5.9 m/s^2 or less*3 at 10 to 55 Hz (directions of X, Y, Z axes)	

*1 Temperature applicable for a short time, for example, in transit.

*2 For the installation at an altitude above 1000 m, consider a 3% reduction in the rated current per 500 m increase in altitude.

*3 2.9 m/s^2 or less for the FR-F840-04320(185K) or higher.

上詮科技有限公司
購買 維修 此手冊零組件
電話：07-466333
Email: service@repairtw.com
Line Id: @2222
www.repairtw.com

◆ Temperature

The permissible surrounding air temperature of the inverter is between -10°C and +50°C (-10°C and +40°C at the SLD rating). Always operate the inverter within this temperature range. Operation outside this range will considerably shorten the service lives of the semiconductors, parts, capacitors and others. Take the following measures to keep the surrounding air temperature of the inverter within the specified range.

■ Measures against high temperature

- Use a forced ventilation system or similar cooling system. (Refer to page 38.)
- Install the enclosure in an air-conditioned electric chamber.
- Block direct sunlight.
- Provide a shield or similar plate to avoid direct exposure to the radiated heat and wind of a heat source.
- Ventilate the area around the enclosure well.

■ Measures against low temperature

- Provide a space heater in the enclosure.
- Do not power OFF the inverter. (Keep the start signal of the inverter OFF.)

■ Sudden temperature changes

- Select an installation place where temperature does not change suddenly.
- Avoid installing the inverter near the air outlet of an air conditioner.
- If temperature changes are caused by opening/closing of a door, install the inverter away from the door.

NOTE

- For the amount of heat generated by the inverter unit, refer to page 37.

◆ Humidity

Operate the inverter within the ambient air humidity of usually 45 to 90% (up to 95% with circuit board coating). Too high humidity will pose problems of reduced insulation and metal corrosion. On the other hand, too low humidity may cause a spatial electrical breakdown. The humidity conditions for the insulation distance defined in JEM 1103 standard "Insulation Distance from Control Equipment" is 45 to 85%.

■ Measures against high humidity

- Make the enclosure enclosed, and provide it with a hygroscopic agent.
- Provide dry air into the enclosure from outside.
- Provide a space heater in the enclosure.

■ Measures against low humidity

Air with proper humidity can be blown into the enclosure from outside. Also, when installing or inspecting the unit, discharge your body (static electricity) beforehand, and keep your body away from the parts and patterns.

■ Measures against condensation

Condensation may occur if frequent operation stops change the in-enclosure temperature suddenly or if the outside air temperature changes suddenly.

Condensation causes such faults as reduced insulation and corrosion.

- Take the measures against high humidity.
- Do not power OFF the inverter. (Keep the start signal of the inverter OFF.)

上正科技有限公司
購買、維修 此手冊零組件
電話： 037-466333
Email: service@repairtw.com
Line id: @zzzz
www.repairtw.com

◆ Dust, dirt, oil mist

Dust and dirt will cause such faults as poor contacts, reduced insulation and cooling effect due to the moisture-absorbed accumulated dust and dirt, and in-enclosure temperature rise due to a clogged filter. In an atmosphere where conductive powder floats, dust and dirt will cause such faults as malfunction, deteriorated insulation and short circuit in a short time.

Since oil mist will cause similar conditions, it is necessary to take adequate measures.

■ Countermeasure

- Place the inverter in a totally enclosed enclosure.
  Take measures if the in-enclosure temperature rises. (Refer to page 38.)
- Purge air.
  Pump clean air from outside to make the in-enclosure air pressure higher than the outside air pressure.

◆ Corrosive gas, salt damage

If the inverter is exposed to corrosive gas or to salt near a beach, the printed board patterns and parts will corrode or the relays and switches will result in poor contact.

In such places, take the measures given in the previous paragraph.

◆ Explosive, flammable gases

As the inverter is non-explosion proof, it must be contained in an explosion-proof enclosure. In places where explosion may be caused by explosive gas, dust or dirt, an enclosure cannot be used unless it structurally complies with the guidelines and has passed the specified tests. This makes the enclosure itself expensive (including the test charges). The best way is to avoid installation in such places and install the inverter in a non-hazardous place.

◆ High altitude

Use the inverter at an altitude of within 2500 m. For use at an altitude above 1000 m, consider a 3% reduction in the rated current per 500 m increase in altitude.

If it is used at a higher place, it is likely that thin air will reduce the cooling effect and low air pressure will deteriorate dielectric strength.

◆ Vibration, impact

The vibration resistance of the inverter is up to 5.9 m/s^2 (2.9 m/s^2 or less for the FR-F840-04320(185K) or higher) at 10 to 55 Hz frequency and 1 mm amplitude for the directions of X, Y, Z axes. Applying vibration and impacts for a long time may loosen the structures and cause poor contacts of connectors, even if those vibration and impacts are within the specified values. Especially when impacts are applied repeatedly, caution must be taken because such impacts may break the installation feet.

■ Countermeasure

- Provide the enclosure with rubber vibration isolators.
- Strengthen the structure to prevent the enclosure from resonance.
- Install the enclosure away from the sources of the vibration.

上正科技有限公司
購買、維修 此手冊零組件
電話： 037-466333
Email: service@repairtw.com
Line id: @zzzz
www.repairtw.com

2.3.2 Amount of heat generated by the inverter

◆ Installing the heatsink inside the enclosure

When the heatsink is installed inside the enclosure, the amount of heat generated by the inverter unit is shown in the following tables.

Voltage	Inverter model	Amount of heat generated (W)	
		SLD	LD
200 V class	FR-F820-00046(0.75K)	60	55
	FR-F820-00077(1.5K)	95	85
	FR-F820-00105(2.2K)	140	130
	FR-F820-00167(3.7K)	200	185
	FR-F820-00250(5.5K)	310	285
	FR-F820-00340(7.5K)	355	320
	FR-F820-00490(11K)	525	480
	FR-F820-00630(15K)	570	515
	FR-F820-00770(18.5K)	770	700
	FR-F820-00930(22K)	950	850
	FR-F820-01250(30K)	1000	950
	FR-F820-01540(37K)	1450	1300
	FR-F820-01870(45K)	1650	1480
	FR-F820-02330(55K)	2120	1900
	FR-F820-03160(75K)	2750	2450
	FR-F820-03800(90K)	3020	2710
	FR-F820-04750(110K)	3960	3530
400 V class	FR-F840-00023(0.75K)	55	50
	FR-F840-00038(1.5K)	75	70
	FR-F840-00052(2.2K)	85	80
	FR-F840-00083(3.7K)	130	120
	FR-F840-00126(5.5K)	175	160
	FR-F840-00170(7.5K)	245	230
	FR-F840-00250(11K)	345	315
	FR-F840-00310(15K)	370	345
	FR-F840-00380(18.5K)	450	415
	FR-F840-00470(22K)	565	520
	FR-F840-00620(30K)	740	675
	FR-F840-00770(37K)	930	825
	FR-F840-00930(45K)	1110	1020
	FR-F840-01160(55K)	1340	1220
	FR-F840-01800(75K)	2000	1640
	FR-F840-02160(90K)	2520	2100
	FR-F840-02600(110K)	3150	2575
	FR-F840-03250(132K)	3600	2800
	FR-F840-03610(160K)	4050	3600
	FR-F840-04320(185K)	4650	3800
	FR-F840-04810(220K)	5300	4650
	FR-F840-05470(250K)	5850	5100
	FR-F840-06100(280K)	6650	5850
	FR-F840-06830(315K)	7550	6600

上正科技有限公司
購買、維修 此手冊零組件
電話： 037-468333
Email: service@repairtw.com
Line Id: @zzzz
www.repairtw.com

NOTE

- The amount of heat generated shown assumes that the output current is inverter rated current, power supply voltage is 220 V (200 V class) or 440 V (400 V class), and carrier frequency is 2 kHz.

◆ Installing the heatsink outside the enclosure

When the heatsink is installed outside the enclosure, the amount of heat generated by the inverter unit is shown in the following tables. (For the details on protruding the heatsink through a panel, refer to page 41.)

Voltage	Inverter model	Amount of heat generated (W)			
		Heatsink section (outside of enclosure)		Control section (inside of enclosure)	
		SLD	LD	SLD	LD
200 V class	FR-F820-00105(2.2K)	104	95	36	35
	FR-F820-00167(3.7K)	161	147	39	38
	FR-F820-00250(5.5K)	263	240	47	45
	FR-F820-00340(7.5K)	265	235	90	85
	FR-F820-00490(11K)	375	340	150	140
	FR-F820-00630(15K)	405	365	165	150
	FR-F820-00770(18.5K)	555	500	215	200
	FR-F820-00930(22K)	690	615	260	235
	FR-F820-01250(30K)	700	665	300	285
	FR-F820-01540(37K)	1035	925	415	375
	FR-F820-01870(45K)	1170	1040	480	440
	FR-F820-02330(55K)	1520	1360	600	540
	FR-F820-03160(75K)	1960	1740	790	710
	FR-F820-03800(90K)	2165	1930	855	780
	FR-F820-04750(110K)	2860	2530	1100	1000
400 V class	FR-F840-00023(0.75K)	20	18	35	32
	FR-F840-00038(1.5K)	36	32	39	38
	FR-F840-00052(2.2K)	42	39	43	41
	FR-F840-00083(3.7K)	77	71	53	49
	FR-F840-00126(5.5K)	120	109	55	51
	FR-F840-00170(7.5K)	180	170	65	60
	FR-F840-00250(11K)	260	235	85	80
	FR-F840-00310(15K)	260	245	110	100
	FR-F840-00380(18.5K)	315	290	135	125
	FR-F840-00470(22K)	395	360	170	160
	FR-F840-00620(30K)	510	465	230	210
	FR-F840-00770(37K)	655	575	275	250
	FR-F840-00930(45K)	780	720	330	300
	FR-F840-01160(55K)	970	880	370	340
	FR-F840-01800(75K)	1400	1140	600	500
	FR-F840-02160(90K)	1780	1470	740	630
	FR-F840-02600(110K)	2235	1820	915	755
	FR-F840-03250(132K)	2540	1960	1060	840
	FR-F840-03610(160K)	2830	2500	1220	1100
	FR-F840-04320(185K)	3250	2660	1400	1140
	FR-F840-04810(220K)	3700	3250	1600	1400
	FR-F840-05470(250K)	4090	3570	1760	1530
	FR-F840-06100(280K)	4650	4090	2000	1760
	FR-F840-06830(315K)	5280	4620	2270	1980

上正科技有限公司
購買、維修、供手冊零組件
電話： 037-266333
email: service@repairtw.com
Line id: @zz22
www.repairtw.com

NOTE

- The amount of heat generated shown assumes that the output current is inverter rated current, power supply voltage is 220 V (200 V class) or 440 V (400 V class), and carrier frequency is 2 kHz.

2.3.3 Cooling system types for inverter enclosure

From the enclosure that contains the inverter, the heat of the inverter and other equipment (transformers, lamps, resistors, etc.) and the incoming heat such as direct sunlight must be dissipated to keep the in-enclosure temperature lower than the permissible temperatures of the in-enclosure equipment including the inverter.

The cooling systems are classified as follows in terms of the cooling calculation method.

- Cooling by natural heat dissipation from the enclosure surface (totally enclosed type)
- Cooling by heat sink (aluminum fin, etc.)

- Cooling by ventilation (forced ventilation type, pipe ventilation type)
- Cooling by heat exchanger or cooler (heat pipe, cooler, etc.)

Cooling system		Enclosure structure	Comment
Natural	Natural ventilation (enclosed type / open type)	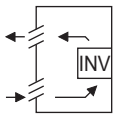	This system is low in cost and generally used, but the enclosure size increases as the inverter capacity increases. This system is for relatively small capacities.
	Natural ventilation (totally enclosed type)	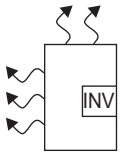	Being a totally enclosed type, this system is the most appropriate for hostile environment having dust, dirt, oil mist, etc. The enclosure size increases depending on the inverter capacity.
Forced air	Heat sink cooling	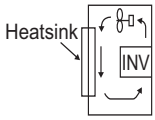	This system has restrictions on the heat sink mounting position and area. This system is for relatively small capacities.
	Forced ventilation	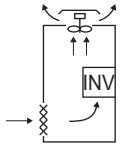	This system is for general indoor installation. This is appropriate for enclosure downsizing and cost reduction, and often used.
	Heat pipe	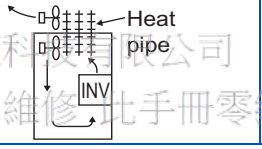	This system is a totally enclosed type, and is appropriate for enclosure downsizing.

上正科技有限公司
購買、維修、比手冊零組件
電話： 037-466333
Email: service@repairtw.com
Line id: @zzzz
www.repairtw.com

2.3.4 Inverter installation

◆ Inverter placement

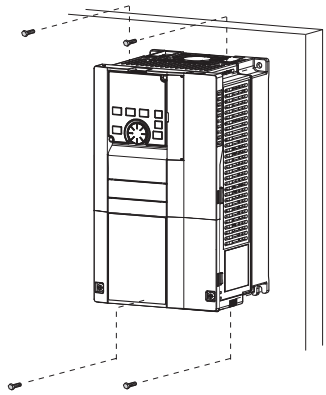

Fix six positions for the FR-F840-04320(185K) or higher.

- Install the inverter on a strong surface securely with screws.
- Leave enough clearances and take cooling measures.
- Avoid places where the inverter is subjected to direct sunlight, high temperature and high humidity.
- Install the inverter on a nonflammable wall surface.
- When encasing multiple inverters in an enclosure, install them in parallel as a cooling measure.
- For heat dissipation and maintenance, keep clearance between the inverter and the other devices or enclosure surface. The clearance below the inverter is required as a wiring space, and the clearance above the inverter is required as a heat dissipation space.

- When designing or building an enclosure for the inverter, carefully consider influencing factors such as heat generation of the contained devices and the operating environment.

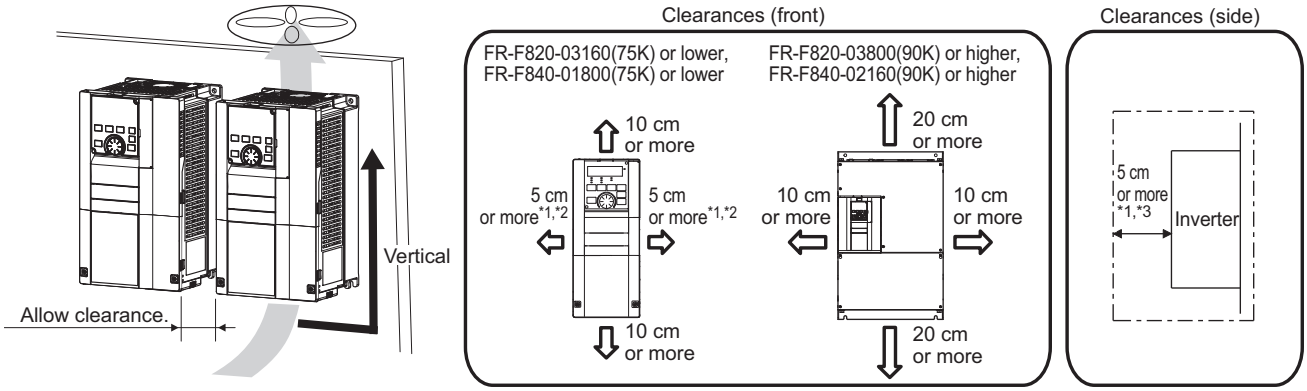

*1 For the FR-F820-00250(5.5K) or lower and FR-F840-00126(5.5K) or lower, allow 1 cm or more clearance.

*2 When using the FR-F820-01250(30K) or lower and FR-F840-00620(30K) or lower at the surrounding air temperature of 40°C or less (30°C or less for the SLD rated inverter), side-by-side installation (0 cm clearance) is available.

*3 For replacing the cooling fan of the FR-F840-04320(185K) or higher, 30 cm of space is necessary in front of the inverter. Refer to page 601 for fan replacement.

◆ Installation orientation of the inverter

Install the inverter on a wall as specified. Do not mount it horizontally or in any other way.

◆ Above the inverter

Heat is blown up from inside the inverter by the small fan built in the unit. Any equipment placed above the inverter should be heat resistant.

上正科技有限公司
購買、維修 此手冊零組件
電話： 037-466333
Email: service@repairtw.com
Line id: @zzzz
www.repairtw.com

◆ Arrangement of multiple inverters

When multiple inverters are placed in the same enclosure, generally arrange them horizontally as shown in the figure (a). When it is inevitable to arrange them vertically to minimize space, take such measures as to provide guides between the inverters since heat generated in the inverters in bottom row can increase the temperatures in the inverters in top row, causing inverter failures.

When installing multiple inverters, fully take measures to prevent the surrounding air temperature of the inverter from being higher than the permissible value by providing ventilation or increasing the enclosure size.

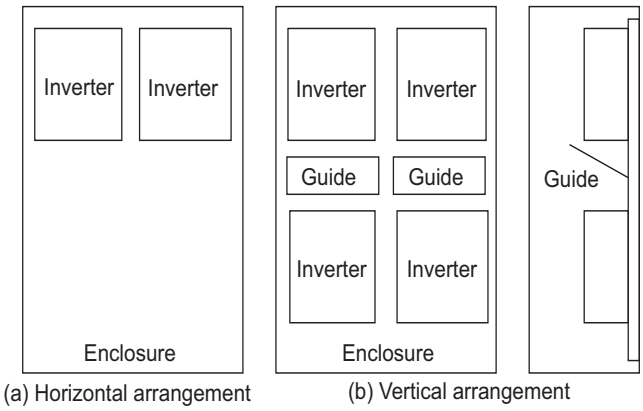

Arrangement of multiple inverters

◆ Arrangement of the ventilation fan and inverter

Heat generated in the inverter is blown up from the bottom of the unit as warm air by the cooling fan. When installing a ventilation fan for that heat, determine the place of ventilation fan installation after fully considering an air flow. (Air passes through areas of low resistance. Make an airway and airflow plates to expose the inverter to cool air.)

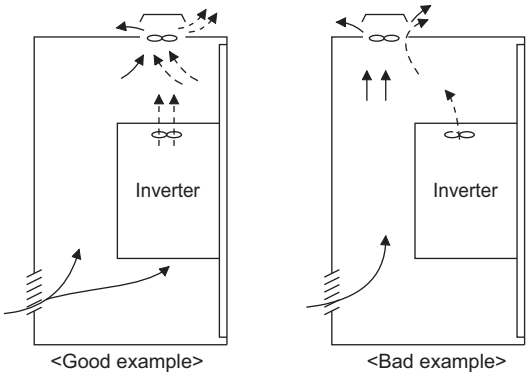

Arrangement of the ventilation fan and inverter

2.3.5 Protruding the heat sink through a panel

When encasing the inverter to an enclosure, the heat generated in the enclosure can be greatly reduced by protruding the heat sink of the inverter.

When installing the inverter in a compact enclosure, etc., this installation method is recommended.

◆ When using the panel through attachment (FR-A8CN)

For the FR-F820-00105(2.2K) to 04750(110K) and the FR-F840-00023(0.75K) to 03610(160K), a heat sink can be protruded outside the enclosure using a panel through attachment (FR-A8CN). (For the FR-F840-04320(185K) or higher, the attachment is not necessary when the heat sink is to be protruded.)

For a panel cut dimension drawing and an installation procedure of the panel through attachment (FR-A8CN) to the inverter, refer to a manual of FR-A8CN.

上正科技有限公司
購買、維修、此主排零組件
電話: 037-466333
Email: service@repairtw.com
www.repairtw.com

◆ Protrusion of heat sink for the FR-F840-04320(185K) or higher

■ Panel cutting

Cut the panel of the enclosure according to the inverter capacity.

FR-F840-04320(185K)
FR-F840-04810(220K)

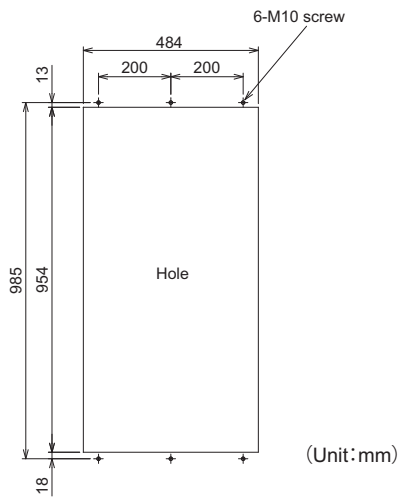

FR-F840-05470(250K)
FR-F840-06100(280K)
FR-F840-06830(315K)

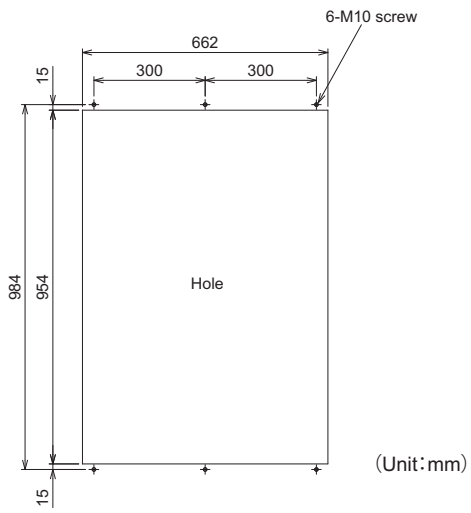

■ Mount point change of installation frame from the rear to the front

The upper and lower installation frames are attached on the inverter (one for each position).

Change the mount point of the upper and lower installation frames from the rear to the front as shown in the figure.

When reattaching the installation frames, make sure that the installation orientation is correct.

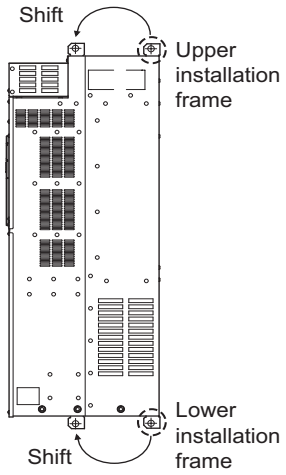

■ Installation of the inverter on the enclosure

Push the inverter heat sink part outside the enclosure, and fix the inverter to the panel with upper and lower installation frames.

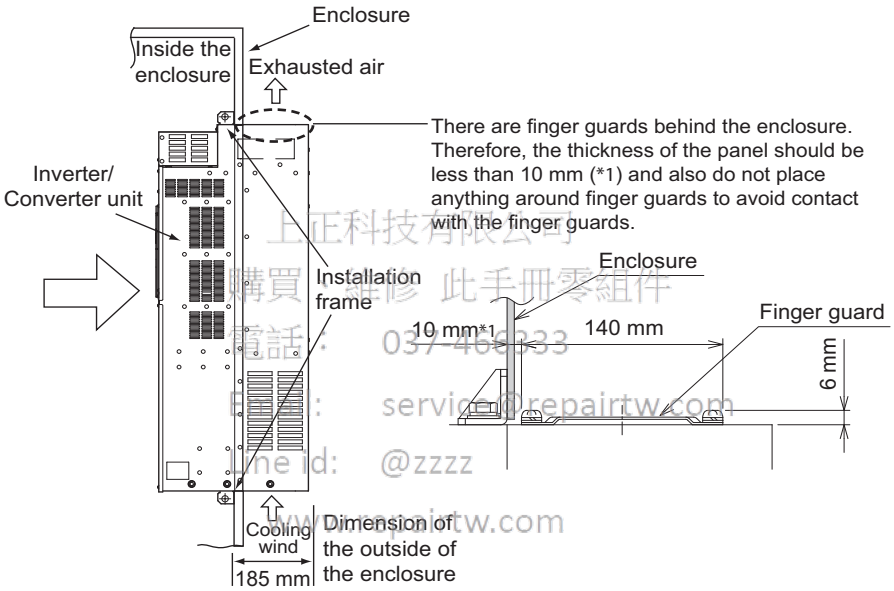

上正科技有限公司
購買 維修 此手冊零組件
電話: 037-462333
Email: service@repairtw.com
Line id: @zzzz
www.repairtw.com

NOTE

- As the heat sink part protruded through the panel includes a cooling fan, this type of installation is not suitable for the environment of water drops, oil, mist, dust, etc.
- Be careful not to drop screws, dust etc. into the inverter and cooling fan section.

2.4 Terminal connection diagrams

◆ Type FM

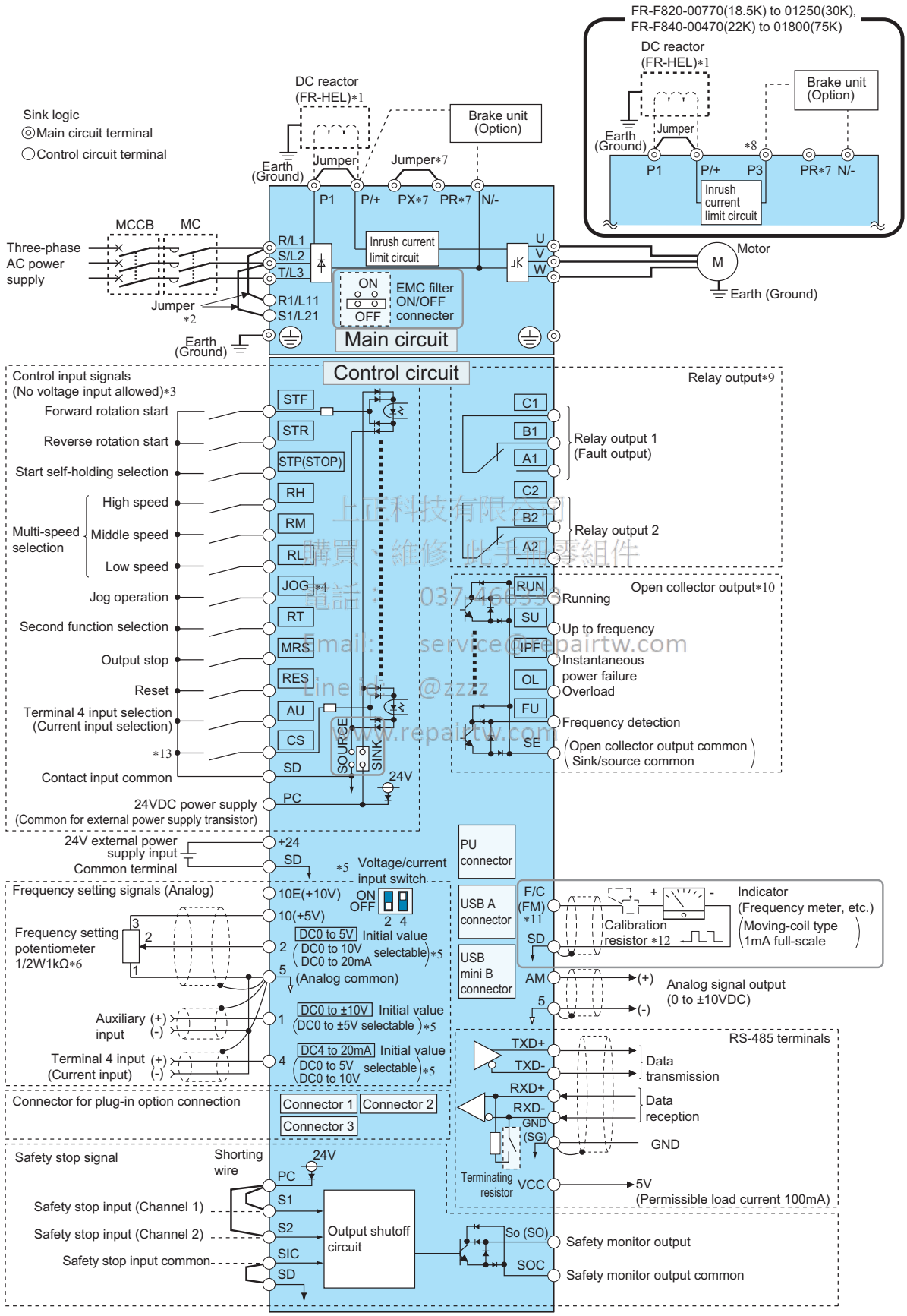

上正科技有限公司
購買、維修 此手機零組件
電話：0374 6033
Email: service@repairtw.com
Line id: @zzzz
www.repairtw.com

*1 For the FR-F820-03160(75K) or higher and the FR-F840-01800(75K) or higher, always connect the DC reactor option FR-HEL. Refer to page 612 to select the right DC reactor according to the applicable motor capacity.
To connect a DC reactor, remove the jumper installed across terminals P1 and P/+ before installing the DC reactor. (A jumper is not installed in the FR-A820-03160(75K) or higher and the FR-A840-01800(75K) or higher.)

*2 When using separate power supply for the control circuit, remove the jumper between R1/L11 and S1/L21.

*3 The function of these terminals can be changed using the Input terminal function selection (**Pr.178 to Pr.189**). (Refer to page 355.)

*4 Terminal JOG is also used as a pulse train input terminal. Use **Pr.291** to choose JOG or pulse.

*5 Terminal input specifications can be changed by analog input specification switchover (**Pr.73, Pr.267**). To input a voltage, set the corresponding switch of the voltage/current input selection switch assembly to the OFF position. To input a current, set the switch to the ON position. Terminals 10 and 2 are also used as a PTC input terminal (**Pr.561**). (Refer to page 257.)

*6 It is recommended to use 2 W 1 kΩ potentiometer when the frequency setting signal is changed frequently.

*7 Do not use terminals PR and PX. Whether a jumper is provided across the terminals depends on the inverter model. (Refer to page 48.)

*8 Do not connect the DC power supply (under DC feeding mode) to terminal P3.

*9 The function of these terminals can be changed using the Output terminal function selection (**Pr.195 or Pr.196**). (Refer to page 312.)

*10 The function of these terminals can be changed using the Output terminal function selection (**Pr.190 to Pr.194**). (Refer to page 312.)

*11 Terminal FM can be used to output pulse trains as open collector output by setting **Pr.291**.

*12 Not required when calibrating the scale with the operation panel.

*13 No function is assigned in the initial setting. Assign the function using **Pr.186 CS terminal function selection**. (Refer to page 355.)

NOTE

- To prevent a malfunction due to noise, keep the signal cables 10 cm or more away from the power cables. Also, keep the cables of the main circuit for input and output separated.
- After wiring, wire offcuts must not be left in the inverter.
  Wire offcuts can cause a fault, failure or malfunction. Always keep the inverter clean.
  When drilling mounting holes in an enclosure etc., take caution not to allow chips and other foreign matter to enter the inverter.
- Set the switches of the voltage/current input selection switch assembly correctly. Incorrect setting may cause a fault, failure or malfunction.

上正科技有限公司
購買、維修 此手冊零組件
電話： 037-466333
Email: service@repairtw.com
Line id: @zzzz
www.repairtw.com

◆ Type CA

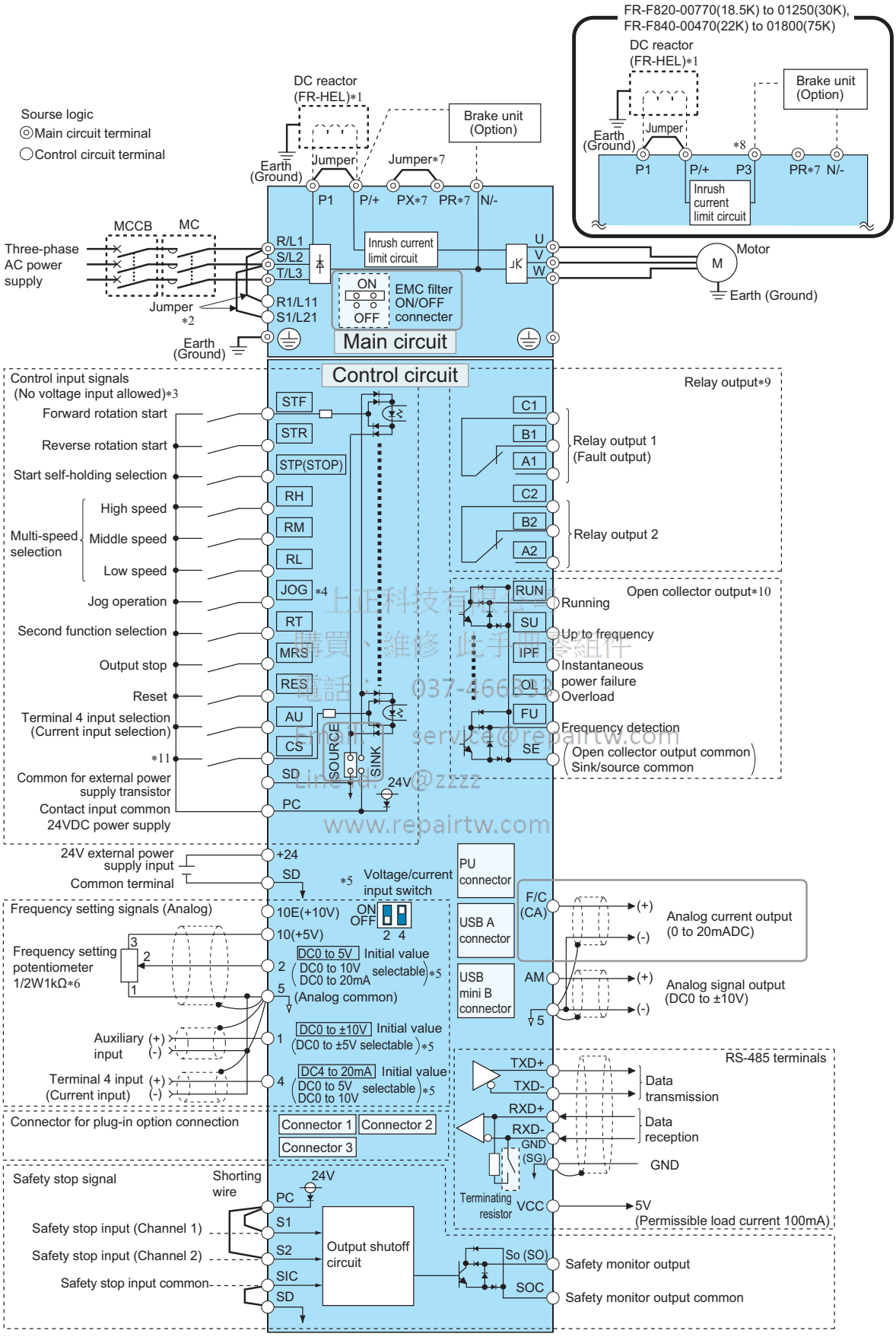

*1 For the FR-F820-03160(75K) or higher and the FR-F840-01800(75K) or higher, always connect the DC reactor option FR-HEL. Refer to page 612 to select the right DC reactor according to the applicable motor capacity.
To connect a DC reactor, remove the jumper installed across terminals P1 and P/+ before installing the DC reactor. (The jumper is not installed for the FR-F820-03160(75K) or higher and the FR-F840-01800(75K) or higher.)

*2 When using separate power supply for the control circuit, remove the jumper between R1/L11 and S1/L21.
*3 The function of these terminals can be changed using the Input terminal function selection (**Pr.178 to Pr.189**). (Refer to page 355.)
*4 Terminal JOG is also used as a pulse train input terminal. Use **Pr.291** to choose JOG or pulse.
*5 Terminal input specifications can be changed by analog input specification switchover (**Pr.73, Pr.267**). To input a voltage, set the corresponding switch of the voltage/current input selection switch assembly to the OFF position. To input a current, set the switch to the ON position. Terminals 10 and 2 are also used as a PTC input terminal (**Pr.561**). (Refer to page 257.)
*6 It is recommended to use 2 W 1 kΩ potentiometer when the frequency setting signal is changed frequently.
*7 Do not use terminals PR and PX. Whether a jumper is provided across the terminals depends on the inverter model. (Refer to page 48.)
*8 Do not connect the DC power supply (under DC feeding mode) to terminal P3.
*9 The function of these terminals can be changed using the Output terminal function selection (**Pr.195 or Pr.196**). (Refer to page 312.)
*10 The function of these terminals can be changed with the output terminal assignment (**Pr.190 to Pr.194**). (Refer to page 312.)
*11 No function is assigned in the initial setting. Assign the function using **Pr.186 CS terminal function selection**. (Refer to page 355.)

NOTE

- To prevent a malfunction due to noise, keep the signal cables 10 cm or more away from the power cables. Also, keep the cables of the main circuit for input and output separated.
- After wiring, wire offcuts must not be left in the inverter.
  Wire offcuts can cause a fault, failure or malfunction. Always keep the inverter clean.
  When drilling mounting holes in an enclosure etc., take caution not to allow chips and other foreign matter to enter the inverter.
- Set the switches of the voltage/current input selection switch assembly correctly. Incorrect setting may cause a fault, failure or malfunction.

上正科技有限公司
購買、維修 此手冊零組件
電話： 037-466333
Email: service@repairtw.com
Line id: @zzzz
www.repairtw.com

2.5 Main circuit terminals

2.5.1 Details on the main circuit terminals

Terminal symbol	Terminal name	Terminal function description	Refer to page
R/L1, S/L2, T/L3	AC power input	Connect these terminals to the commercial power supply. Do not connect anything to these terminals when using the high power factor converter (FR-HC2) or the power regeneration common converter (FR-CV).	—
U, V, W	Inverter output	Connect these terminals to a three-phase squirrel cage motor or a PM motor.	—
R1/L11, S1/L21	Power supply for the control circuit	Connected to the AC power supply terminals R/L1 and S/L2. To retain the fault display and fault output, or to use a high power factor converter (FR-HC2) or a power regeneration common converter (FR-CV), remove the jumpers across terminals R/L1 and R1/L11 and across S/L2 and S1/L21, and supply external power to these terminals. The power capacity necessary when separate power is supplied from R1/L11 and S1/L21 differs according to the inverter capacity. FR-F820-00630(15K) or lower or FR-F840-00380(18.5K) or lower: 60 VA, FR-F820-00770(18.5K) or higher or FR-F840-00470(22K) or higher: 80 VA	66
P/+, N/-	Brake unit connection	Connect the brake unit (FR-BU2, FR-BU, or BU), power regeneration common converter (FR-CV), power regeneration converter (MT-RC), high power factor converter (FR-HC2), or DC power supply (under DC feeding mode). When connecting multiple inverters, FR-F820-00770(18.5K) to 01250(30K) or FR-F840-00470(22K) to 01800(75K), in parallel using the FR-CV or FR-HC2, always use either terminal P/+ or P3 for the connection. (Do not use terminals P/+ and P3 together.) Do not connect the DC power supply between terminals P3 and N/-. Use terminals P/+ and N/- for DC feeding.	76
P3, N/-	Brake unit connection for the FR-F820-00770(18.5K) to 01250(30K) or FR-F840-00470(22K) to 01800(75K)		
P/+, P1	DC reactor connection for the FR-F820-02330(55K) or lower or the FR-F840-01160(55K) or lower	Remove the jumper across terminals P/+ and P1, and connect a DC reactor. When a DC reactor is not connected, the jumper across terminals P/+ and P1 should not be removed.	81
	DC reactor connection for the FR-F820-03160(75K) or higher or the FR-F840-01800(75K) or higher	Always connect a DC reactor, which is available as an option.	
PR, PX	Do not use terminals PX and PR. The terminal PX is provided for the FR-F820-00490(11K) or lower and the FR-F840-00250(11K) or lower. The terminal PR is provided for the FR-F820-01250(30K) or lower and the FR-F840-01800(75K) or lower.		—
⏚	Earth (ground)	For earthing (grounding) the inverter chassis. Be sure to earth (ground) the inverter.	57

上比科技有限公司
購買 維修 此手冊零組件
電話 037-466333
Email service@repairtw.com
Line id @zzzz
www.repairtw.com

2.5.2 Main circuit terminal layout and wiring to power supply and motor

FR-F820-00046(0.75K), FR-F820-00077(1.5K)

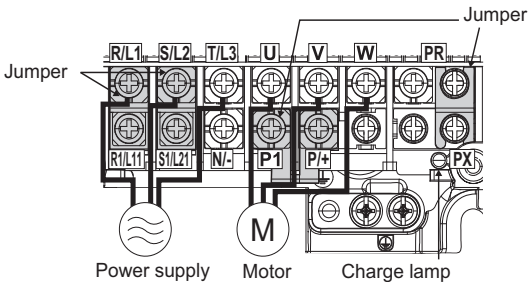

FR-F820-00105(2.2K) to FR-F820-00250(5.5K)
FR-F840-00023(0.75K) to FR-F840-00126(5.5K)

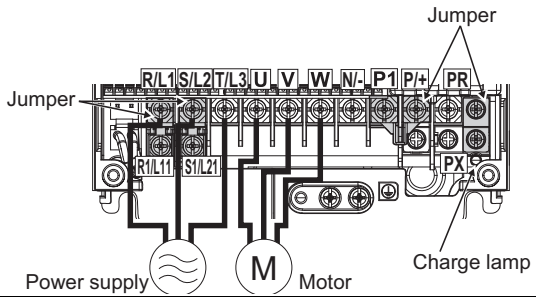

FR-F820-00340(7.5K), FR-F820-00490(11K)
FR-F840-00170(7.5K), FR-F840-00250(11K)

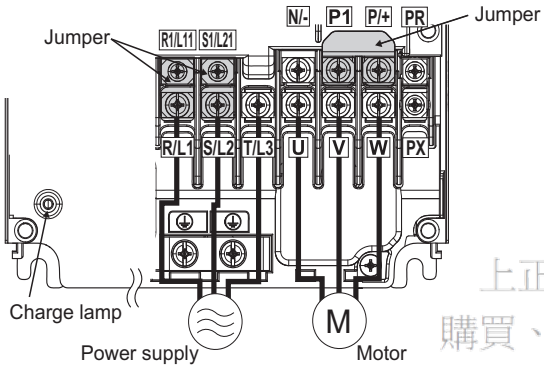

FR-F820-00630(15K)
FR-F840-00310(15K), FR-F840-00380(18.5K)

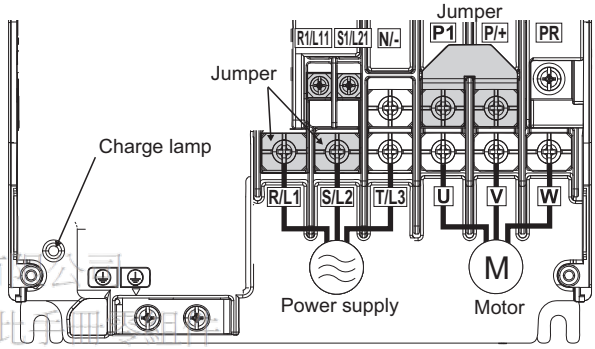

FR-F820-00770(18.5K) to FR-F820-01250(30K)
FR-F840-00470(22K), FR-F840-00620(30K)

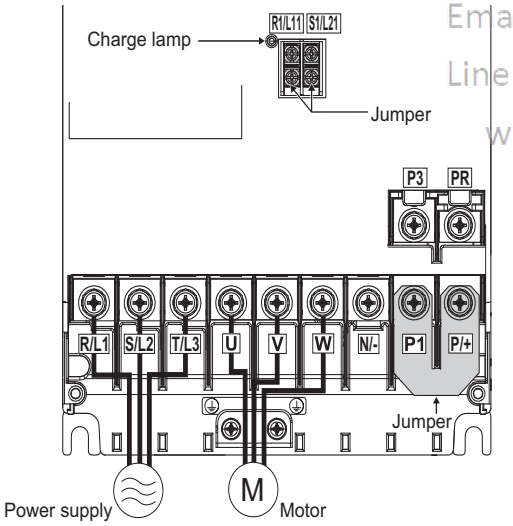

FR-F820-01540(37K)[*1]
FR-F840-00770(37K)

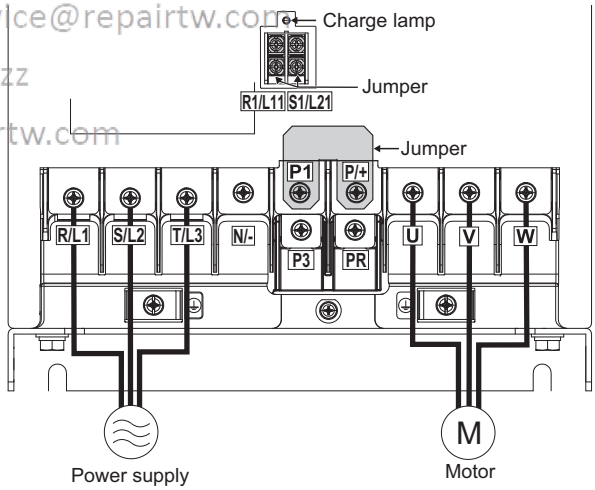

上正科技有限公司
購買、維修 此產品專用
電話： 037-[illegible]
Email: service@repairtw.com
Line id: @zzzz
www.repairtw.com

FR-F820-01870(45K), FR-F820-02330(55K)

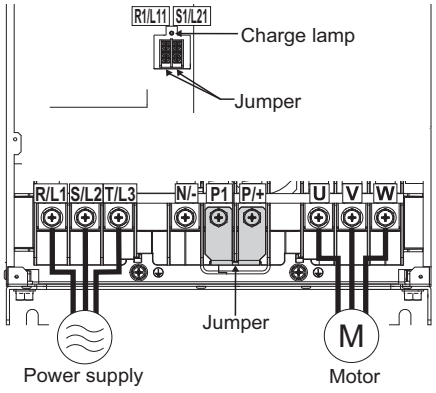

FR-F820-03160(75K)

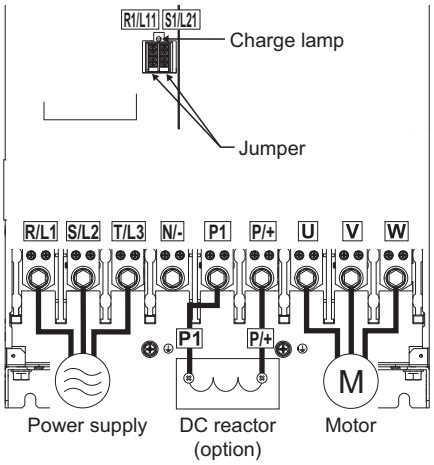

FR-F820-03800(90K), FR-F820-04750(110K)
FR-F840-03250(132K) to FR-F840-04810(220K)[*2]

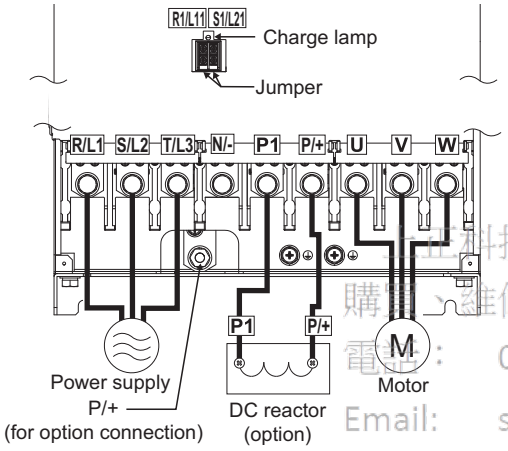

FR-F840-00930(45K) to FR-F840-01800(75K)[*3]

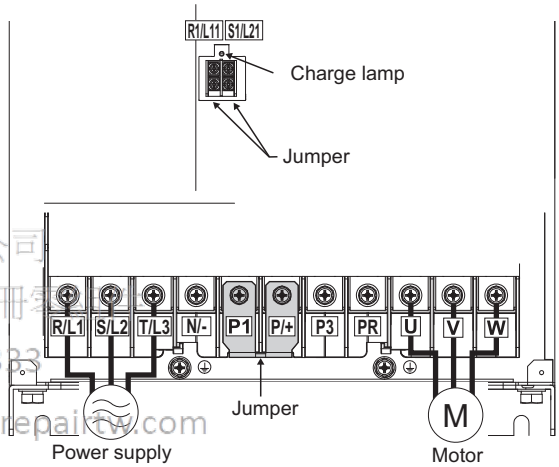

FR-F840-02160(90K), FR-F840-02600(110K)

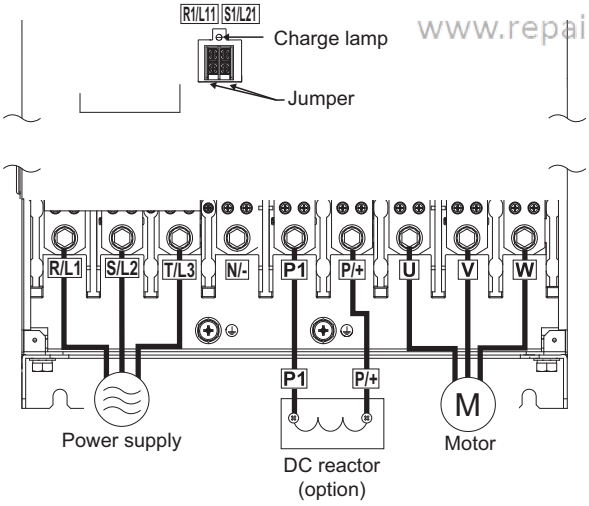

FR-F840-05470(250K) to FR-F840-06830(315K)

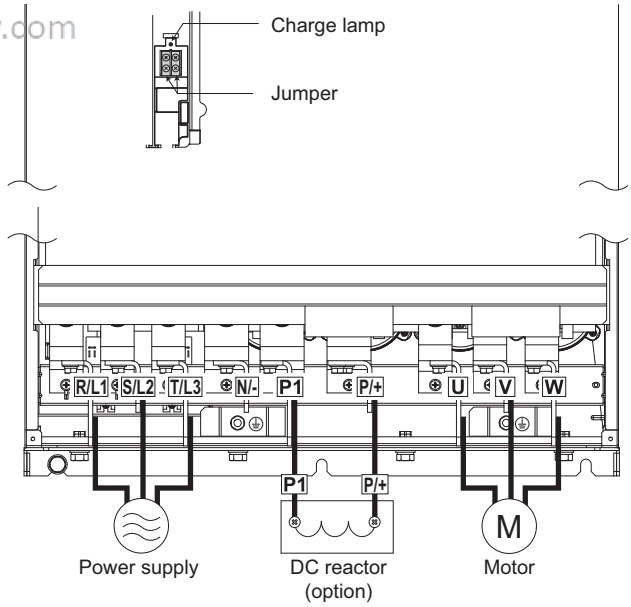

上上科技有限公司
購買、維修 此手冊零
電話: 037-466383
Email: service@repairtw.com
Line id: @zzzz
www.repairtw.com

*1 Terminals P3 and PR on the FR-F820-01540(37K) are not provided with a screw. Do not connect anything to them.
*2 When an option other than the DC reactor must be connected to terminal P/+, use terminal P/+ (for option connection).
*3 For the FR-F840-01800(75K), a jumper is not installed across terminals P1 and P/+. Always connect the DC reactor option FR-HEL across terminals P1 and P/+.

NOTE

- Make sure the power cables are connected to the R/L1, S/L2, and T/L3. (Phase need not be matched.) Never connect the power cable to the U, V, and W of the inverter. Doing so will damage the inverter.
- Connect the motor to U, V, and W. (The phases must be matched.)
- When wiring the inverter main circuit conductor of the FR-F840-05470(250K) or higher, tighten a nut from the right side of the conductor. When wiring two cables, place cables on both sides of the conductor. For wiring, use bolts (nuts) provided with the inverter. (Refer to the following figure.)

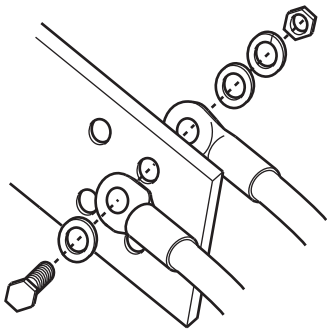

■ Handling of the wiring cover

(For the FR-F820-00630(15K) to 00930(22K) and FR-F840-00310(15K) to 00620(30K))

For the hook of the wiring cover, cut off the necessary parts using a pair of needle-nose pliers etc.

NOTE

- Cut off the same number of lugs as wires. If parts where no wire is put through have been cut off (10 mm or more), protective structure (IEC60529) becomes an open type (IP00).

上正科技有限公司
購買、維修 此手冊零組件
電話： 037-466333
Email: service@repairtw.com
Line id: @zzzz
www.repairtw.com

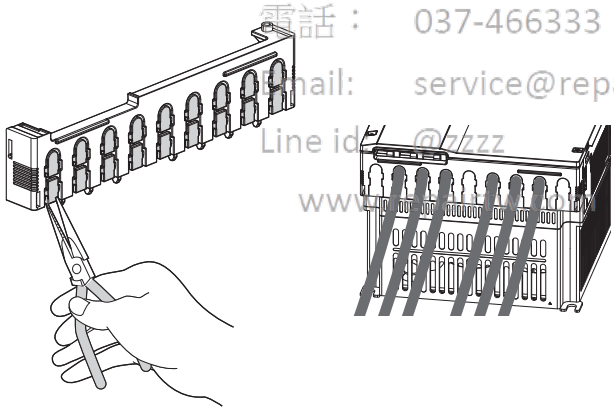

2.5.3 Applicable cables and wiring length

Select a recommended size cable to ensure that the voltage drop ratio is within 2%.

If the wiring distance is long between the inverter and motor, the voltage drop in the main circuit will cause the motor torque to decrease especially at a low speed.

The following table shows a selection example for the wiring length of 20 m.

◆ For LD rating (Pr.570 Multiple rating setting = "1")

- 200 V class (220 V input power supply, without a power factor improving AC or DC reactor)

Applicable inverter model FR-F820-[ ]	Terminal screw size*4	Tightening torque (N·m)	Crimp terminal		Cable gauge								
					HIV cables, etc. (mm²)*1				AWG/MCM*2		PVC cables, etc. (mm²)*3		
			R/L1, S/L2, T/L3	U, V, W	R/L1, S/L2, T/L3	U, V, W	P/+, P1	Earthing (grounding) cable	R/L1, S/L2, T/L3	U, V, W	R/L1, S/L2, T/L3	U, V, W	Earthing (grounding) cable
00046(0.75K) to 00105(2.2K)	M4	1.5	2-4	2-4	2	2	2	2	14	14	2.5	2.5	2.5
00167(3.7K)	M4	1.5	5.5-4	5.5-4	3.5	3.5	3.5	3.5	12	12	4	4	4
00250(5.5K)	M4	1.5	5.5-4	5.5-4	5.5	5.5	5.5	5.5	10	10	6	6	6
00340(7.5K)	M5	2.5	14-5	8-5	14	8	14	5.5	6	10	16	6	16
00490(11K)	M5	2.5	14-5	14-5	14	14	14	8	6	6	16	16	16
00630(15K)	M5	2.5	22-5	22-5	22	22	22	14	4	4	25	25	16
00770(18.5K)	M6	4.4	38-6	22-6	38	22	38	14	2	4	35	25	25
00930(22K)	M8(M6)	7.8	38-8	38-8	38	38	38	22	2	2	35	35	25
01250(30K)	M8(M6)	7.8	60-8	60-8	60	60	60	22	1/0	1/0	50	50	25
01540(37K)	M8(M6)	7.8	80-8	60-8	80	60	80	22	3/0	1/0	70	70	35
01870(45K)	M10(M8)	14.7	100-10	100-10	100	100	100	38	4/0	4/0	95	95	50
02330(55K)	M10(M8)	14.7	100-10	100-10	100	100	100	38	4/0	4/0	95	95	50

- 200 V class (220 V input power supply, with a power factor improving AC or DC reactor)

Applicable inverter model FR-F820-[ ]	Terminal screw size*4	Tightening torque (N·m)	Crimp terminal		Cable gauge								
					HIV cables, etc. (mm²)*1				AWG/MCM*2		PVC cables, etc. (mm²)*3		
			R/L1, S/L2, T/L3	U, V, W	R/L1, S/L2, T/L3	U, V, W	P/+, P1	Earthing (grounding) cable	R/L1, S/L2, T/L3	U, V, W	R/L1, S/L2, T/L3	U, V, W	Earthing (grounding) cable
00046(0.75K) to 00105(2.2K)	M4	1.5	2-4	2-4	2	2	2	2	14	14	2.5	2.5	2.5
00167(3.7K)	M4	1.5	5.5-4	5.5-4	3.5	3.5	3.5	3.5	12	12	4	4	4
00250(5.5K)	M4	1.5	5.5-4	5.5-4	5.5	5.5	5.5	5.5	10	10	6	6	6
00340(7.5K)	M5	2.5	5.5-5	5.5-5	5.5	5.5	14	5.5	10	10	6	6	6
00490(11K)	M5	2.5	14-5	14-5	14	14	14	8	6	6	16	16	16
00630(15K)	M5	2.5	22-5	22-5	22	22	22	14	4	4	25	25	16
00770(18.5K)	M6	4.4	22-6	22-6	22	22	38	14	4	4	25	25	16
00930(22K)	M8(M6)	7.8	38-8	38-8	38	38	38	22	2	2	35	35	25
01250(30K)	M8(M6)	7.8	60-8	60-8	60	60	60	22	1/0	1/0	50	50	25
01540(37K)	M8(M6)	7.8	60-8	60-8	60	60	80	22	1/0	1/0	70	70	35
01870(45K)	M10(M8)	14.7	100-10	100-10	100	100	100	38	4/0	4/0	95	95	50
02330(55K)	M10(M8)	14.7	100-10	100-10	100	100	100	38	4/0	4/0	95	95	50
03160(75K)	M12(M8)	24.5	150-12	150-12	125	125	125	38	250	250	120	120	—
03800(90K)	M12(M8)	24.5	150-12	150-12	150	150	150	38	2×4/0	2×4/0	150	150	—
04750(110K)	M12(M8)	24.5	150-12	150-12	150	150	2×100	60	2×4/0	2×4/0	2×95	2×95	—

- 400 V class (440 V input power supply, without a power factor improving AC or DC reactor)

Applicable inverter model FR-F840-[ ]	Terminal screw size*4	Tightening torque (N·m)	Crimp terminal		Cable gauge								
					HIV cables, etc. (mm²)*1				AWG/MCM*2		PVC cables, etc. (mm²)*3		
			R/L1, S/L2, T/L3	U, V, W	R/L1, S/L2, T/L3	U, V, W	P/+, P1	Earthing (grounding) cable	R/L1, S/L2, T/L3	U, V, W	R/L1, S/L2, T/L3	U, V, W	Earthing (grounding) cable
00023(0.75K) to 00083(3.7K)	M4	1.5	2-4	2-4	2	2	2	2	14	14	2.5	2.5	2.5
00126(5.5K)	M4	1.5	2-4	2-4	2	2	3.5	3.5	12	14	2.5	2.5	4
00170(7.5K)	M4	1.5	5.5-4	5.5-4	3.5	3.5	3.5	3.5	12	12	4	4	4
00250(11K)	M4	1.5	5.5-4	5.5-4	5.5	5.5	5.5	5.5	10	10	6	6	10
00310(15K)	M5	2.5	8-5	5.5-5	8	5.5	8	5.5	8	10	10	6	10
00380(18.5K)	M5	2.5	14-5	8-5	14	8	14	8	6	8	16	10	16
00470(22K)	M6	4.4	14-6	14-6	14	14	22	14	6	6	16	16	16
00620(30K)	M6	4.4	22-6	22-6	22	22	22	14	4	4	25	25	16
00770(37K)	M6	4.4	22-6	22-6	22	22	22	14	4	4	25	25	16
00930(45K)	M8	7.8	38-8	38-8	38	38	38	22	1	2	50	50	25
01160(55K)	M8	7.8	60-8	60-8	60	60	60	22	1/0	1/0	50	50	25

上正科技有限公司
購買、維修、地手機零組件
電話：037-466833
Email: service@repairtw.com
Line id: @zzzz
www.repairtw.com

- 400 V class (440 V input power supply, with a power factor improving AC or DC reactor)

Applicable inverter model FR-F840-[ ]	Terminal screw size*4	Tightening torque (N·m)	Crimp terminal		Cable gauge								
					HIV cables, etc. (mm^2)*1				AWG/MCM*2		PVC cables, etc. (mm^2)*3		
			R/L1, S/L2, T/L3	U, V, W	R/L1, S/L2, T/L3	U, V, W	P/+, P1	Earthing (grounding) cable	R/L1, S/L2, T/L3	U, V, W	R/L1, S/L2, T/L3	U, V, W	Earthing (grounding) cable
00023(0.75K) to 00083(3.7K)	M4	1.5	2-4	2-4	2	2	2	2	14	14	2.5	2.5	2.5
00126(5.5K)	M4	1.5	2-4	2-4	2	2	3.5	3.5	14	14	2.5	2.5	2.5
00170(7.5K)	M4	1.5	5.5-4	5.5-4	3.5	3.5	3.5	3.5	12	12	4	4	4
00250(11K)	M4	1.5	5.5-4	5.5-4	5.5	5.5	5.5	5.5	10	10	6	6	6
00310(15K)	M5	2.5	5.5-5	5.5-5	5.5	5.5	8	5.5	10	10	6	6	6
00380(18.5K)	M5	2.5	8-5	8-5	8	8	14	8	8	8	10	10	10
00470(22K)	M6	4.4	14-6	14-6	14	14	22	14	6	6	16	16	16
00620(30K)	M6	4.4	22-6	22-6	22	22	22	14	4	4	25	25	16
00770(37K)	M6	4.4	22-6	22-6	22	22	22	14	4	4	25	25	16
00930(45K)	M8	7.8	38-8	38-8	38	38	38	22	2	2	50	50	25
01160(55K)	M8	7.8	60-8	60-8	60	60	60	22	1/0	1/0	50	50	25
01800(75K)	M8	7.8	60-8	60-8	60	60	60	22	1/0	1/0	50	50	25
02160(90K)	M10	14.7	60-10	60-10	60	60	80	22	1/0	1/0	50	50	25
02600(110K)	M10	14.7	80-10	80-10	80	80	80	38	3/0	3/0	70	70	35
03250(132K)	M10(M12)	14.7	100-10	100-10	100	100	100	38	4/0	4/0	95	95	50
03610(160K)	M10(M12)	14.7	150-10	150-10	125	125	150	38	250	250	120	120	70
04320(185K)	M12(M10)	24.5	150-12	150-12	150	150	150	38	300	300	150	150	95
04810(220K)	M12(M10)	24.5	100-12	100-12	2×100	2×100	2×100	60	2×4/0	2×4/0	2×95	2×95	95
05470(250K)	M12(M10)	46	100-12	100-12	2×100	2×100	2 × 125	60	2×4/0	2×4/0	2×95	2×95	95
06100(280K)	M12(M10)	46	150-12	150-12	2×125	2×125	2×125	60	2×250	2×250	2×120	2×120	120
06830(315K)	M12(M10)	46	150-12	150-12	2×150	2×150	2×150	60	2×300	2×300	2×150	2×150	150

*1 For the FR-F820-02330(55K) or lower and FR-F840-01160(55K) or lower, it is the gauge of a cable with the continuous maximum permissible temperature of 75°C (HIV cable (600 V grade heat-resistant PVC insulated wire), etc.). It assumes a surrounding air temperature of 50°C or lower and the wiring distance of 20 m or shorter.
For the FR-F820-03160(75K) or higher, FR-F840-01800(75K) or higher, it is the gauge of the cable with the continuous maximum permissible temperature of 90°C or higher. It assumes a surrounding air temperature of 50°C or lower and in-enclosure wiring.

*2 For all the 200 V class capacities and FR-F840-00930(45K) or lower, it is the gauge of a cable with the continuous maximum permissible temperature of 75°C (THHW cable). It assumes a surrounding air temperature of 40°C or lower and the wiring distance of 20 m or shorter.
For the FR-F840-01160(55K) or higher, it is the gauge of a cable with the continuous maximum permissible temperature of 90°C (THHN cable). It assumes a surrounding air temperature of 40°C or lower and in-enclosure wiring.
(For the use in the United States or Canada, refer to "Instructions for UL and cUL" in the Instruction Manual (Startup) or Instruction Manual (Hardware).)

*3 For the FR-F820-00770(18.5K) or lower and the FR-F840-00930(45K) or lower, it is the gauge of a cable with the continuous maximum permissible temperature of 70°C (PVC cable). It assumes a surrounding air temperature of 40°C or lower and the wiring distance of 20 m or shorter.
For the FR-F820-00930(22K) or higher and the FR-F840-01160(55K) or higher, it is the gauge of a cable with the continuous maximum permissible temperature of 90°C (XLPE cable). It assumes a surrounding air temperature of 40°C or lower and in-enclosure wiring.
(Selection example mainly for use in Europe.)

*4 The screw size for terminals R/L1, S/L2, T/L3, U, V, W, P/+, N/-, P1, and P3, and the earthing (grounding) terminal are shown.
The screw size for earthing (grounding) terminal on FR-F820-00930(22K) or higher is shown in parentheses.
The screw size for terminal P/+ for option connection on the FR-F840-03250(132K) and FR-F840-03610(160K) is shown in parentheses.
The screw size for earthing (grounding) terminal on FR-F840-04320(185K) or higher is shown in parentheses.

上好科技有限公司
購買、維修、此手冊零組件
電話： 037-406333
Email: service@repairtw.com
Line Id: @zzzz
www.repairtw.com

◆ For SLD rating (Pr.570 Multiple rating setting = "0")

- 200 V class (220 V input power supply, without a power factor improving AC or DC reactor)

Applicable inverter model FR-F820-[ ]	Terminal screw size*4	Tightening torque (N·m)	Crimp terminal		Cable gauge								
					HIV cables, etc. (mm²)*1				AWG/MCM*2		PVC cables, etc. (mm²)*3		
			R/L1, S/L2, T/L3	U, V, W	R/L1, S/L2, T/L3	U, V, W	P/+, P1	Earthing (grounding) cable	R/L1, S/L2, T/L3	U, V, W	R/L1, S/L2, T/L3	U, V, W	Earthing (grounding) cable
00046(0.75K) to 00105(2.2K)	M4	1.5	2-4	2-4	2	2	2	2	14	14	2.5	2.5	2.5
00167(3.7K)	M4	1.5	5.5-4	5.5-4	3.5	3.5	3.5	3.5	12	12	4	4	4
00250(5.5K)	M4	1.5	5.5-4	5.5-4	5.5	5.5	5.5	5.5	10	10	6	6	6
00340(7.5K)	M5	2.5	14-5	8-5	14	8	14	5.5	6	8	16	10	16
00490(11K)	M5	2.5	14-5	14-5	14	14	14	8	6	6	16	16	16
00630(15K)	M5	2.5	22-5	22-5	22	22	22	14	4	4	25	25	16
00770(18.5K)	M6	4.4	38-6	22-6	38	22	38	14	2	4	50	25	25
00930(22K)	M8(M6)	7.8	38-8	38-8	38	38	38	22	2	2	50	50	25
01250(30K)	M8(M6)	7.8	60-8	60-8	60	60	60	22	1/0	1/0	50	50	25
01540(37K)	M8(M6)	7.8	80-8	80-8	80	80	80	22	3/0	3/0	70	70	35
01870(45K)	M10(M8)	14.7	100-10	100-10	100	100	100	38	4/0	4/0	95	95	50
02330(55K)	M10(M8)	14.7	100-10	100-10	100	100	100	38	4/0	4/0	95	95	50

- 200 V class (220 V input power supply, with a power factor improving AC or DC reactor)

Applicable inverter model FR-F820-[ ]	Terminal screw size*4	Tightening torque (N·m)	Crimp terminal		Cable gauge								
					HIV cables, etc. (mm²)*1				AWG/MCM*2		PVC cables, etc. (mm²)*3		
			R/L1, S/L2, T/L3	U, V, W	R/L1, S/L2, T/L3	U, V, W	P/+, P1	Earthing (grounding) cable	R/L1, S/L2, T/L3	U, V, W	R/L1, S/L2, T/L3	U, V, W	Earthing (grounding) cable
00046(0.75K) to 00105(2.2K)	M4	1.5	2-4	2-4	2	2	2	2	14	14	2.5	2.5	2.5
00167(3.7K)	M4	1.5	5.5-4	5.5-4	3.5	3.5	3.5	3.5	12	12	4	4	4
00250(5.5K)	M4	1.5	5.5-4	5.5-4	5.5	5.5	5.5	5.5	10	10	6	6	6
00340(7.5K)	M5	2.5	8-5	8-5	8	8	8	5.5	8	8	10	10	10
00490(11K)	M5	2.5	14-5	14-5	14	14	14	8	6	6	16	16	16
00630(15K)	M5	2.5	22-5	22-5	22	22	22	14	4	4	25	25	16
00770(18.5K)	M6	4.4	22-6	22-6	22	22	38	14	4	4	25	25	25
00930(22K)	M8(M6)	7.8	38-8	38-8	38	38	38	22	2	2	50	50	25
01250(30K)	M8(M6)	7.8	60-8	60-8	60	60	60	22	1/0	1/0	50	50	25
01540(37K)	M8(M6)	7.8	80-8	80-8	80	80	80	22	3/0	3/0	70	70	35
01870(45K)	M10(M8)	14.7	100-10	100-10	100	100	100	38	4/0	4/0	95	95	50
02330(55K)	M10(M8)	14.7	100-10	100-10	100	100	100	38	4/0	4/0	95	95	50
03160(75K)	M12(M8)	24.5	150-12	150-12	125	125	150	38	250	250	120	120	—
03800(90K)	M12(M8)	24.5	150-12	150-12	150	150	2×100	38	2×4/0	2×4/0	2×95	2×95	—
04750(110K)	M12(M8)	24.5	100-12	100-12	2×100	2×100	2×100	60	2×4/0	2×4/0	2×95	2×95	—

- 400 V class (440 V input power supply, without a power factor improving AC or DC reactor)

Applicable inverter model FR-F840-[ ]	Terminal screw size*4	Tightening torque (N·m)	Crimp terminal		Cable gauge								
					HIV cables, etc. (mm²)*1				AWG/MCM*2		PVC cables, etc. (mm²)*3		
			R/L1, S/L2, T/L3	U, V, W	R/L1, S/L2, T/L3	U, V, W	P/+, P1	Earthing (grounding) cable	R/L1, S/L2, T/L3	U, V, W	R/L1, S/L2, T/L3	U, V, W	Earthing (grounding) cable
00023(0.75K) to 00083(3.7K)	M4	1.5	2-4	2-4	2	2	2	2	14	14	2.5	2.5	2.5
00126(5.5K)	M4	1.5	2-4	2-4	2	2	3.5	3.5	12	14	2.5	2.5	4
00170(7.5K)	M4	1.5	5.5-4	5.5-4	3.5	3.5	3.5	3.5	12	12	4	4	4
00250(11K)	M4	1.5	5.5-4	5.5-4	5.5	5.5	5.5	5.5	10	10	6	6	10
00310(15K)	M5	2.5	8-5	5.5-5	8	5.5	8	5.5	8	10	10	6	10
00380(18.5K)	M5	2.5	14-5	8-5	14	8	14	8	6	8	16	10	16
00470(22K)	M6	4.4	14-6	14-6	14	14	22	14	6	6	16	16	16
00620(30K)	M6	4.4	22-6	22-6	22	22	22	14	4	4	25	25	16
00770(37K)	M6	4.4	22-6	22-6	22	22	22	14	4	4	25	25	16
00930(45K)	M8	7.8	38-8	38-8	38	38	38	22	1	2	50	50	25
01160(55K)	M8	7.8	60-8	60-8	60	60	60	22	1/0	1/0	50	50	25

上正科技有限公司
購買、維修、地手機零組件
電話：037-466833
Email: service@repairtw.com
Line id: @zzzz
www.repairtw.com

- 400 V class (440 V input power supply, with a power factor improving AC or DC reactor)

Applicable inverter model FR-F840-[ ]	Terminal screw size*4	Tightening torque (N·m)	Crimp terminal		Cable gauge								
					HIV cables, etc. (mm^2)*1				AWG/MCM*2		PVC cables, etc. (mm^2)*3		
			R/L1, S/L2, T/L3	U, V, W	R/L1, S/L2, T/L3	U, V, W	P/+, P1	Earthing (grounding) cable	R/L1, S/L2, T/L3	U, V, W	R/L1, S/L2, T/L3	U, V, W	Earthing (grounding) cable
00023(0.75K) to 00083(3.7K)	M4	1.5	2-4	2-4	2	2	2	2	14	14	2.5	2.5	2.5
00126(5.5K)	M4	1.5	2-4	2-4	2	2	3.5	3.5	14	14	2.5	2.5	4
00170(7.5K)	M4	1.5	5.5-4	5.5-4	3.5	3.5	3.5	3.5	12	12	4	4	4
00250(11K)	M4	1.5	5.5-4	5.5-4	5.5	5.5	5.5	5.5	10	10	6	6	10
00310(15K)	M5	2.5	5.5-5	5.5-5	5.5	5.5	8	5.5	10	10	6	6	10
00380(18.5K)	M5	2.5	8-5	8-5	8	8	14	8	8	8	10	10	16
00470(22K)	M6	4.4	14-6	14-6	14	14	22	14	6	6	16	16	16
00620(30K)	M6	4.4	22-6	22-6	22	22	22	14	4	4	25	25	16
00770(37K)	M6	4.4	22-6	22-6	22	22	22	14	4	4	25	25	16
00930(45K)	M8	7.8	38-8	38-8	38	38	38	22	2	2	50	50	25
01160(55K)	M8	7.8	60-8	60-8	60	60	60	22	1/0	1/0	50	50	25
01800(75K)	M8	7.8	60-8	60-8	60	60	60	22	1/0	1/0	50	50	25
02160(90K)	M10	14.7	80-10	80-10	80	80	80	22	3/0	3/0	70	70	35
02600(110K)	M10	14.7	100-10	100-10	100	100	100	38	4/0	4/0	95	95	50
03250(132K)	M10(M12)	14.7	150-10	150-10	125	125	150	38	250	250	120	120	70
03610(160K)	M10(M12)	14.7	150-10	150-10	150	150	150	38	300	300	150	150	95
04320(185K)	M12(M10)	24.5	100-12	100-12	2×100	2×100	2×100	60	2×4/0	2×4/0	2×95	2×95	95
04810(220K)	M12(M10)	24.5	100-12	100-12	2×100	2×100	2 × 125	60	2×4/0	2×4/0	2×95	2×95	95
05470(250K)	M12(M10)	46	150-12	150-12	2×125	2×125	2×125	60	2×250	2×250	2×120	2×120	120
06100(280K)	M12(M10)	46	150-12	150-12	2×150	2×150	2×150	60	2×300	2×300	2×150	2×150	150
06830(315K)	M12(M10)	46	200-12	200-12	2×200	2×200	2×200	100	2×350	2×350	2×185	2×185	2×95

*1 For all the 200 V class capacities and FR-F840-01160(55K) or lower, it is the gauge of a cable with the continuous maximum permissible temperature of 75°C (HIV cable (600 V grade heat-resistant PVC insulated wire), etc.). It assumes a surrounding air temperature of 50°C or lower and the wiring distance of 20 m or shorter.
For the FR-F840-01800(75K) or higher, it is the gauge of the cable with the continuous maximum permissible temperature of 90°C or higher. It assumes a surrounding air temperature of 50°C or lower and in-enclosure wiring.

*2 For all the 200 V class capacities and FR-F840-00930(45K) or lower, it is the gauge of a cable with the continuous maximum permissible temperature of 75°C (THHW cable). It assumes a surrounding air temperature of 40°C or lower and the wiring distance of 20 m or shorter.
For the FR-F840-01160(55K) or higher, it is the gauge of a cable with the continuous maximum permissible temperature of 90°C (THHN cable). It assumes a surrounding air temperature of 40°C or lower and in-enclosure wiring.
(For the use in the United States or Canada, refer to "Instructions for UL and cUL" in the Instruction Manual (Startup) or Instruction Manual (Hardware).)

*3 For the FR-F820-00930(22K) or lower and the FR-F840-00930(45K) or lower, it is the gauge of a cable with the continuous maximum permissible temperature of 70°C (PVC cable). It assumes a surrounding air temperature of 40°C or lower and the wiring distance of 20 m or shorter.
For the FR-F820-01250(30K) or higher and the FR-F840-01160(55K) or higher, it is the gauge of a cable with the continuous maximum permissible temperature of 90°C (XLPE cable). It assumes a surrounding air temperature of 40°C or lower and in-enclosure wiring.
(Selection example mainly for use in Europe.)

*4 The screw size for terminals R/L1, S/L2, T/L3, U, V, W, P/+, N/-, P1, and P3, and the earthing (grounding) terminal are shown.
The screw size for earthing (grounding) terminal on FR-F820-00930(22K) or higher is shown in parentheses.
The screw size for terminal P/+ for option connection on the FR-F840-03250(132K) and FR-F840-03610(160K) is shown in parentheses.
The screw size for earthing (grounding) terminal on FR-F840-04320(185K) or higher is shown in parentheses.

上班科技有限公司
購買、維修 電子零組件
電話： 037-406333
Email: service@repairtw.com
Line Id: @zzzz
www.repairtw.com

The line voltage drop can be calculated by the following formula:

$$\text{Line voltage drop [V]} = \frac{\sqrt{3} \times \text{wire resistance [m}\Omega\text{/m]} \times \text{wiring distance [m]} \times \text{current [A]}}{1000}$$

Use a larger diameter cable when the wiring distance is long or when it is desired to decrease the voltage drop (torque reduction) in the low speed range.

NOTE

- Tighten the terminal screw to the specified torque.
  A screw that has been tightened too loosely can cause a short circuit or malfunction.
  A screw that has been tightened too tightly can cause a short circuit or malfunction due to the unit breakage.
- Use crimp terminals with insulation sleeves to wire the power supply and motor.

◆ Total wiring length

■ With induction motor

Connect one or more general-purpose motors within the total wiring length shown in the following table.

Pr.72 setting (carrier frequency)	FR-F820-00046(0.75K), FR-F840-00023(0.75K)	FR-F820-00077(1.5K), FR-F840-00038(1.5K)	FR-F820-00105(2.2K) or higher, FR-F840-00052(2.2K) or higher
2 (2 kHz) or lower	300 m	500 m	500 m
3 (3 kHz) or higher	200 m	300 m	500 m

Total wiring length (FR-F820-00105(2.2K) or higher, FR-F840-00052(2.2K) or higher)

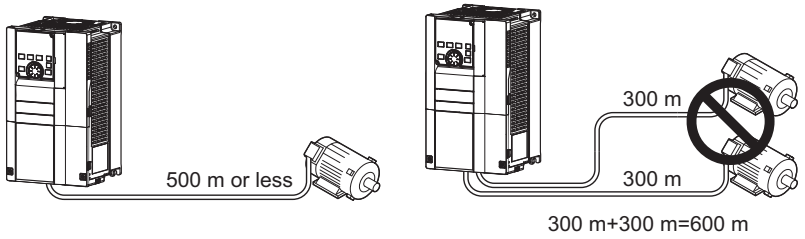

When driving a 400 V class motor by the inverter, surge voltages attributable to the wiring constants may occur at the motor terminals, deteriorating the insulation of the motor. In this case, take one of the following measure.

- Use a "400 V class inverter-driven insulation-enhanced motor" and set **Pr.72 PWM frequency selection** according to the wiring length.

Wiring length 50 m or shorter	Wiring length 50 to 100 m	Wiring length longer than 100 m
15 (14.5 kHz) or lower	9 (9 kHz) or lower	4 (4 kHz) or lower

- For the FR-F840-01160(55K) or lower, connect a surge voltage suppression filter (FR-ASF-H/FR-BMF-H) at the output side of the inverter. For the FR-F840-01800(75K) or higher, connect a sine wave filter (MT-BSL/BSC) at the output side of the inverter.

上正科技有限公司
購買、維修 此手冊零組件
電話： 037-466333
Email: service@repairtw.com
Line id: @zzzz
www.repairtw.com

■ With PM motor

Use the following length of wiring or shorter when connecting a PM motor.

Voltage class	Pr.72 setting (carrier frequency)	FR-F820-00077(1.5K) or lower, FR-F840-00038(1.5K) or lower	FR-F820-00105(2.2K) or higher, FR-F840-00052(2.2K) or higher
200 V	0 (2 kHz) to 15 (14 kHz)	100 m	100 m
400 V	5 or lower (2 kHz)	100 m	100 m
	6 to 9 (6 kHz)	50 m	100 m
	10 (10 kHz) or higher	50 m	50 m

Use one PM motor for one inverter. Multiple PM motors cannot be connected to an inverter.

NOTE

- Especially for long-distance wiring, the inverter may be affected by a charging current caused by stray capacitances of the wiring, leading to an activation of the overcurrent protection, malfunction of the fast-response current limit operation, or even to an inverter failure. It may also cause a malfunction or fault of the equipment connected ON the inverter output side. If the fast-response current limit function malfunctions, disable the function. (Refer to **Pr.156 Stall prevention operation selection** on page 273.)
- A surge voltage suppression filter (FR-ASF-H/FR-BMF-H) can be used under V/F control and Advanced magnetic flux vector control.
  A sine wave filter (MT-BSL/BSC) can be used under V/F control. Do not use the filters under different control methods.
- For the details of **Pr.72 PWM frequency selection**, refer to page 207.
- For the details of the surge voltage suppression filter (FR-ASF-H/FR-BMF-H) and the sine wave filter (MT-BSL/BSC), refer to the Instruction Manual of each option.
- Refer to page 98 to drive a 400 V class motor by an inverter.

上正科技有限公司
購買、維修 此手冊零組件
電話： 037-466333
Email: service@repairtw.com
Line id: @zzzz
www.repairtw.com

2.5.4 Earthing (grounding) precautions

Always earth (ground) the motor and inverter.

◆ Purpose of earthing (grounding)

Generally, an electrical apparatus has an earth (ground) terminal, which must be connected to the ground before use.
An electrical circuit is usually insulated by an insulating material and encased. However, it is impossible to manufacture an insulating material that can shut off a leakage current completely, and actually, a slight current flows into the case. The purpose of earthing (grounding) the case of an electrical apparatus is to prevent operators from getting an electric shock from this leakage current when touching it.
To avoid the influence of external noises, the earthing (grounding) is important to EMI-sensitive equipment that handle low-level signals or operate very fast such as audio equipment, sensors, computers.

◆ Earthing (grounding) system to be established

As described previously, the purpose of earthing (grounding) is roughly classified into the electrical shock prevention and the prevention of malfunction due to the influence of electromagnetic noise. These two purposes should be clearly distinguished, and the appropriate earth (ground) system must be established to prevent the leakage current having the inverter's high frequency components from reversing through another earth (ground) point for malfunction prevention by following these instructions:

- Make the separate earth (ground) connection (I) for high frequency products such as the inverter from any other devices (EMI-sensitive devices described above) wherever possible.
  Establishing adequate common (single-point) earth (ground) system (II) shown in the following figure is allowed only in cases where the separate earth (ground) system (I) is not feasible. Do not make inadequate common (single-point) earth (ground) connection (III).
  As leakage currents containing many high frequency components flows into the earthing (grounding) cables of the inverter and peripheral devices (including a motor), the inverter must also be earthed (grounded) separately from EMI-sensitive devices described above.
  In a high building, it may be effective to use its iron structure frames as earthing (grounding) electrode for EMI prevention in order to separate from the earth (ground) system for electric shock prevention.
  - Earthing (Grounding) must conform to the requirements of national and local safety regulations and electrical codes (NEC section 250, IEC 61140 class 1 and other applicable standards). A neutral-point earthed (grounded) power supply for 400 V class inverter in compliance with EN standard must be used.
  - Use the thickest possible earthing (grounding) cable. The earthing (grounding) cable should be equal to the size indicated in the table on page 50.
  - The earthing (grounding) point should be as close as possible to the inverter, and the earth (ground) wire length should be as short as possible.
  - Run the earthing (grounding) cable as far away as possible from the I/O wiring of the EMI-sensitive devices and run them in parallel in the minimum distance.

上正科技有限公司
購買、維修、此手冊零組件
電話： 037-466333
Email： service@repairtw.com
Line id： @zzzz
www.repairtw.com

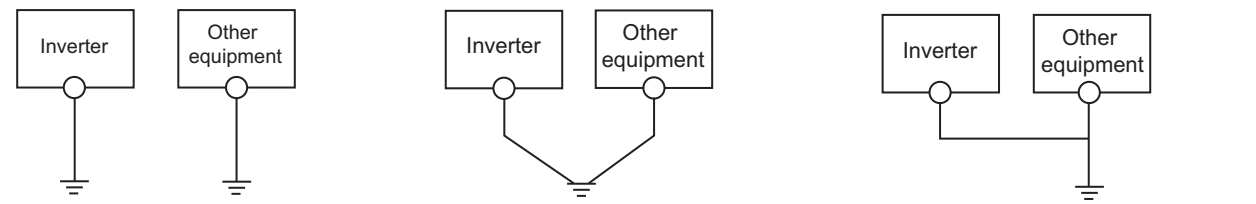

(I) Separate earthing (grounding): Good
(II) Common (single-point) earthing (grounding): OK
(III) Inadequate common (single-point) earthing (grounding): Bad

NOTE

- To be compliant with the EU Directive (Low Voltage Directive), refer to the Instruction Manual (Startup).

2.6 Control circuit

2.6.1 Details on the control circuit terminals

◆ Input signal

Type	Terminal symbol	Terminal name	Terminal function description		Rated specification	Refer to page
Contact input	STF[*1]	Forward rotation start	Turn ON the STF signal to start forward rotation and turn it OFF to stop.	When the STF and STR signals are turned ON simultaneously, the stop command is given.	Input resistance: 4.7 kΩ, voltage when contacts are open: 21 to 27 VDC, current when contacts are short-circuited: 4 to 6 mADC	359
	STR[*1]	Reverse rotation start	Turn ON the STR signal to start reverse rotation and turn it OFF to stop.			
	STP (STOP)[*1]	Start self-holding selection	Turn ON the STP (STOP) signal to self-hold the start signal.			359
	RH, RM, RL[*1]	Multi-speed selection	Multi-speed can be selected according to the combination of RH, RM and RL signals.			249
	JOG[*1]	Jog mode selection	Turn ON the JOG signal to enable JOG operation (initial setting) and turn ON the start (STF or STR) signal to start JOG operation.			248
		Pulse train input	Terminal JOG is also used as a pulse train input terminal. To use as a pulse train input terminal, change the **Pr.291** setting. (maximum input pulse: 100k pulses/s)		Input resistance: 2 kΩ, current when contacts are short-circuited: 8 to 13 mADC	245
	RT[*1]	Second function selection	Turn ON the RT signal to enable the second function. When the second function such as "Second torque boost" and "Second V/F (base frequency)" is set, turning ON the RT signal enables the selected function.		Input resistance: 4.7 kΩ, voltage when contacts are open: 21 to 27 VDC, current when contacts are short-circuited: 4 to 6 mADC	358
	MRS[*1]	Output stop	Turn ON the MRS signal (20 ms or more) to stop the inverter output. Use this signal to shut off the inverter output when stopping the motor with an electromagnetic brake.			357
	RES[*1]	Reset	Use this signal to reset a fault output provided when a protective function is activated. Turn ON the RES signal for 0.1 seconds or longer, then turn it OFF. In the initial setting, reset is always enabled. By setting **Pr.75**, reset can be enabled only at an inverter fault occurrence. The inverter recovers about 1 second after the reset is released.			188
	AU[*1]	Terminal 4 input selection	The terminal 4 function is available only when the AU signal is ON. Turning the AU signal ON makes terminal 2 invalid.			330
	CS[*1]	(No function)	Use **Pr.186 CS terminal function selection** for function assignment.			—
	SD	Contact input common (sink)[*3]	Common terminal for the contact input terminal (sink logic), terminal FM.		—	—
		External transistor common (source)[*4]	Connect this terminal to the power supply common terminal of a transistor output (open collector output) device, such as a programmable controller, in the source logic to avoid malfunction by undesirable current.			
		24 VDC power supply common	Common terminal for the 24 VDC power supply (terminal PC, terminal +24). Isolated from terminals 5 and SE.			
	PC	External transistor common (sink)[*3]	Connect this terminal to the power supply common terminal of a transistor output (open collector output) device, such as a programmable controller, in the sink logic to avoid malfunction by undesirable current.		Power supply voltage range: 19.2 to 28.8 VDC, permissible load current: 100 mA	62
		Contact input common (source)[*4]	Common terminal for contact input terminal (source logic).			
		24 VDC power supply	Can be used as a 24 VDC 0.1 A power supply.			

日本中壽有限公司
購買、維修 此手冊零組件
電話：03-466333
Email: service@renpaitw.com
www.repair.tw.com

Type	Terminal symbol	Terminal name	Terminal function description	Rated specification	Refer to page
Frequency setting	10E	Frequency setting power supply	When connecting the frequency setting potentiometer at an initial status, connect it to terminal 10. Change the input specifications of terminal 2 using **Pr.73** when connecting it to terminal 10E.	10 ±0.4 VDC, permissible load current: 10 mA	330
	10			5 ±0.5 VDC, permissible load current: 10 mA	330
	2	Frequency setting (voltage)	Inputting 0 to 5 VDC (or 0 to 10 V, 0 to 20 mA) provides the maximum output frequency at 5 V (10 V, 20 mA) and makes input and output proportional. Use **Pr.73** to switch among input 0 to 5 VDC (initial setting), 0 to 10 VDC, and 0 to 20 mA. Set the voltage/current input switch 1 for terminal 2 in the ON position to select current input (0 to 20 mA).*2	For voltage input, input resistance: 10 ±1 kΩ, maximum permissible voltage: 20 VDC. For current input, input resistance: 245 ±5 Ω, maximum permissible current: 30 mA. 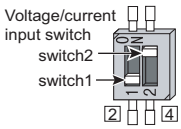	330
	4	Frequency setting (current)	Inputting 4 to 20 mADC (or 0 to 5 V, 0 to 10 V) provides the maximum output frequency at 20 mA and makes input and output proportional. This input signal is valid only when the AU signal is ON (terminal 2 input is invalid). Use **Pr.267** to switch among input 4 to 20 mA (initial setting), 0 to 5 VDC, and 0 to 10 VDC. Set the corresponding switch of the voltage/current input selection switch assembly to the OFF position to select voltage input (0 to 5 V / 0 to 10 V).*2 Use **Pr.858** to switch terminal functions.		330
	1	Frequency setting auxiliary	Input 0 to ±5 VDC or 0 to ±10 VDC to add this signal to the frequency setting signal input via terminal 2 or 4. Use **Pr.73** to switch between input 0 to ±5 VDC and 0 to ±10 VDC (initial setting). Use **Pr.868** to switch terminal functions.	Input resistance: 10 ±1 kΩ, permissible maximum voltage: ±20 VDC	330
	5	Frequency setting common	Common terminal for the frequency setting signal (via terminal 2, 1, or 4) and for the analog output terminals AM and CA. Do not earth (ground).	—	330
Thermistor	10 2	PTC thermistor input	For receiving PTC thermistor outputs. When PTC thermistor is valid (**Pr.561** ≠ "9999"), terminal 2 is not available for frequency setting.	[Applicable PTC thermistor specification] Overheat detection resistance: 0.5 to 30 kΩ (Set in **Pr.561**)	252
Power supply input	+24	24 V external power supply input	For connecting a 24 V external power supply. If a 24 V external power supply is connected, power is supplied to the control circuit while the main power circuit is OFF.	Input voltage: 23 to 25.5 VDC, input current: 1.4 A or less	69

上正科技有限公司
購買、維修、出手冊零組件
電話： 037-466333
Email: service@repairtw.com
Line id: @7777
www.repairtw.com

*1 The terminal function can be selected by **Pr.178 to Pr.196 (Input terminal function selection)**. (Refer to page 355.)

*2 Correctly set **Pr.73, Pr.267**, and the corresponding switch of the voltage/current input selection switch assembly to input an analog signal in accordance with the setting.
Applying a voltage with the switch ON (current input is selected) or applying a current with the switch OFF (voltage input is selected) could cause component damage of the inverter or analog circuits of output devices. (For the details, refer to page 330.)

*3 Sink logic is initially set for the FM-type inverter.

*4 Source logic is initially set for the CA-type inverter.

◆ Output signal

Type	Terminal symbol	Terminal name	Terminal function description		Rated specification	Refer to page
Relay	A1, B1, C1*1	Relay output 1 (fault output)	1 changeover contact output that indicates that an inverter's protective function has been activated and the outputs are stopped. Fault: discontinuity across B and C (continuity across A and C), Normal: continuity across B and C (discontinuity across A and C)		Contact capacity: 230 VAC 0.3 A (power factor = 0.4), 30 VDC 0.3 A	312
	A2, B2, C2*1	Relay output 2	1 changeover contact output			312
Open collector	RUN*1	Inverter running	The output is in LOW state when the inverter output frequency is equal to or higher than the starting frequency (initial value: 0.5 Hz). The output is in HIGH state during stop or DC injection brake operation.		Permissible load: 24 VDC (27 VDC at maximum) 0.1 A (The voltage drop is 2.8 V at maximum while the signal is ON.) The open collector transistor is ON (conductive) in LOW state. The transistor is OFF (not conductive) in HIGH state.	312
	SU*1	Up to frequency	The output is in LOW state when the output frequency is within the set frequency range ±10% (initial value). The output is in HIGH state during acceleration/deceleration and at a stop.	Fault code (4 bits) output. (Refer to page 327.)		319
	OL*1	Overload warning	The output is in LOW state when stall prevention is activated by the stall prevention function. The output is in HIGH state when stall prevention is canceled.			273
	IPF*1	Instantaneous power failure	The output is in LOW state when an instantaneous power failure occurs or when the undervoltage protection is activated.			446, 451
	FU*1	Frequency detection	The output is in LOW state when the inverter output frequency is equal to or higher than the preset detection frequency, and is in HIGH state when it is less than the preset detection frequency.			319
	SE	Open collector output common	Common terminal for terminals RUN, SU, OL, IPF, FU		—	—
Pulse	FM*2	For meter	Among several monitor items such as output frequency, select one to output it via these terminals. The signal is not output during an inverter reset. The size of output signal is proportional to the magnitude of the corresponding monitor item. Use **Pr.55**, **Pr.56**, and **Pr.866** to set full scales for the monitoring output frequency, output current, and torque. (Refer to page 297.)	Output item: output frequency (initial setting)	Permissible load current: 2 mA, pulse for full scale: 1440 pulses/s	297
		NPN open collector output		This terminal can be used for open collector outputs depending on the **Pr.291** setting.	Maximum output pulse: 50k pulses/s, permissible load current: 80 mA	245
Analog	AM	Analog voltage output		Output item: output frequency (initial setting)	Output signal: 0 to ±10 VDC, permissible load current: 1 mA (load impedance 10 kΩ or more), resolution: 8 bits	297
	CA*3	Analog current output			Load impedance: 200 to 450 Ω, output signal: 0 to 20 mADC	297

*1 The terminal function can be selected by **Pr.190 to Pr.196 (Output terminal function selection)**. (Refer to page 312.)
*2 Terminal FM is provided in the FM-type inverter.
*3 Terminal CA is provided in the CA-type inverter.

上市科技有限公司
購買、維修、備手冊零組件
電話： 037-466333
Email: service@repairtw.com
Line id: @zzzz
www.repairtw.com

◆ Communication

Type	Terminal symbol		Terminal name	Terminal function description		Refer to page
RS-485	—		PU connector	RS-485 communication can be made through the PU connector (for connection on a 1:1 basis only). Conforming standard: EIA-485 (RS-485) Transmission format: Multidrop link Transmission speed: 4800 to 115200 bps Wiring length: 500 m		473
	RS-485 terminals	TXD+	Inverter transmission terminal	RS-485 communication can be made through the RS-485 terminals. Conforming standard: EIA-485 (RS-485) Transmission format: Multidrop link Transmission speed: 300 to 115200 bps Overall length: 500 m		475
		TXD-				
		RXD+	Inverter reception terminal			
		RXD-				
		GND (SG)	Earthing (grounding)			
USB	—		USB A connector	A connector (receptacle). Plug a USB memory device into this connector to copy parameter settings or use the trace function.	Interface: conforms to USB 1.1 (USB 2.0 full-speed compatible) Transmission speed: 12 Mbps	74
			USB B connector	Mini B connector (receptacle). By connecting the inverter to a personal computer via this connector, FR Configurator2 installed on the computer can be used for setting the inverter, or monitoring or testing the inverter operation.		74

◆ Safety stop signal

Terminal symbol	Terminal name	Terminal function description	Rated specification	Refer to page
S1	Safety stop input (Channel 1)	Use terminals S1 and S2 to receive the safety stop signal input from the safety relay module. Terminals S1 and S2 can be used at a time (dual channel). The Inverter judges the condition of the internal safety circuit from the status (shorted/opened) between terminals S1 and SIC, or between S2 and SIC. When the status is opened, the inverter output is shut off. In the initial status, terminal S1 and S2 are shorted with terminal PC by shorting wires. Terminal SIC is shorted with terminal SD. Remove the shorting wires and connect the safety relay module when using the safety stop function.	Input resistance: 4.7 kΩ, input current: 4 to 6 mADC (with 24 VDC input)	70
S2	Safety stop input (Channel 2)			
SIC	Safety stop input terminal common	Common terminal for terminals S1 and S2.	—	
So (SO)	Safety monitor output (open collector output)	The output status varies depending on the input status of the safety stop signals. The output is in HIGH state during occurrence of the internal safety circuit failure. The output is in LOW state otherwise. (The open collector transistor is ON (conductive) in LOW state. The transistor is OFF (not conductive) in HIGH state.) Refer to the Safety Stop Function Instruction Manual if the output becomes in HIGH state even though both terminals S1 and S2 are open. (Contact your sales representative for this manual.)	Permissible load: 24 VDC (27 VDC at maximum), 0.1 A (The voltage drop is 3.4 V at maximum while the signal is ON.)	
SOC	Safety monitor output terminal common	Common terminal for terminal So (SO).	—	

大正科技有限公司
購買、維修、此手冊零組件
電話：03/4663333
Email：service@repairtw.com
Line ID：@rsac
www.repairtw.com

2.6.2 Control logic (sink/source) change

Switch the control logic of input signals as necessary.

To change the control logic, change the jumper connector position on the control circuit board.

Connect the jumper connector to the connector pin of the desired control logic.

The control logic of input signals is initially set to the sink logic (SINK) for the type FM inverter.

The control logic of input signals is initially set to the source logic (SOURCE) for the type CA inverter.

(The output signals may be used in either the sink or source logic independently of the jumper connector position.)

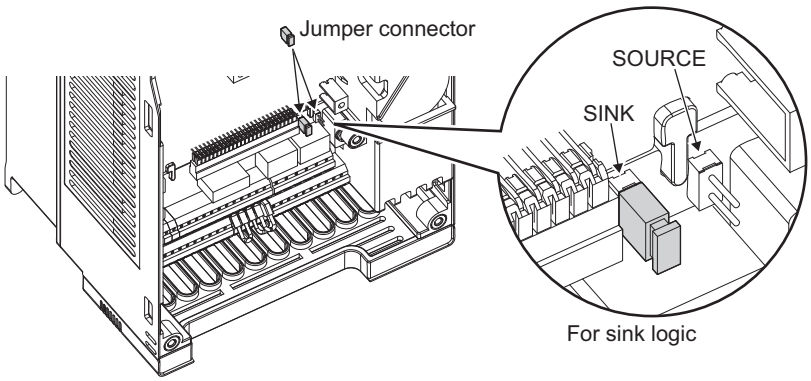

NOTE

- Make sure that the jumper connector is installed correctly.
- Never change the control logic while power is ON.

上正科技有限公司
購買、維修 此手冊零組件
電話： 037-466333
Email: service@repairtw.com
Line id: @rrrr
www.repairtw.com

◆ Sink logic and source logic

- In the sink logic, a signal turns ON when a current exits from the corresponding signal input terminal.
  Terminal SD is common to the contact input signals. Terminal SE is common to the open collector output signals.
- In the source logic, a signal turns ON when a current enters into the corresponding signal input terminal.
  Terminal PC is common to the contact input signals. Terminal SE is common to the open collector output signals.

●Current flow concerning the input/output signal when sink logic is selected

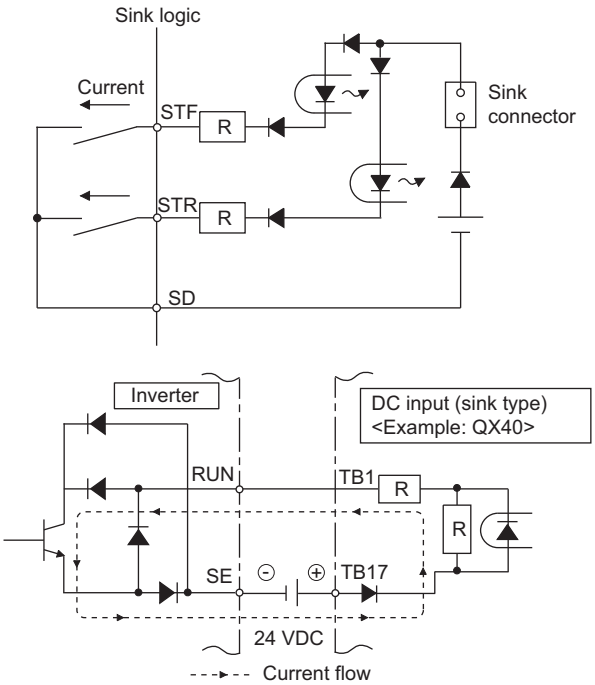

●Current flow concerning the input/output signal when source logic is selected

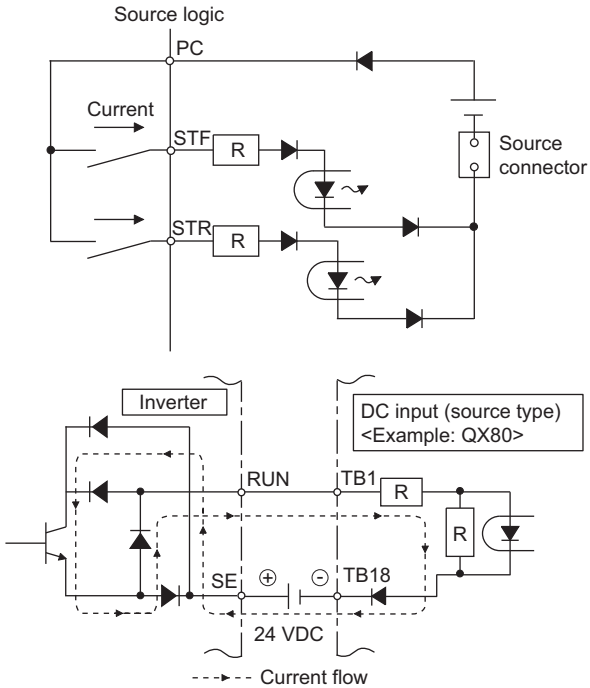

- When using an external power supply for transistor output

Sink logic	Source logic
Use terminal PC as a common terminal, and perform wiring as shown below. (Do not connect terminal SD on the inverter with the terminal of 0 V for the external power supply. When using terminals PC-SD as a 24 VDC power supply, do not install an external power supply in parallel with the inverter. Doing so may cause a malfunction in the inverter due to undesirable currents.)	Use terminal SD as a common terminal, and perform wiring as shown below. (Do not connect terminal PC on the inverter with the terminal of +24 V for the external power supply. When using terminals PC-SD as a 24 VDC power supply, do not install an external power supply in parallel with the inverter. Doing so may cause a malfunction in the inverter due to undesirable currents.)
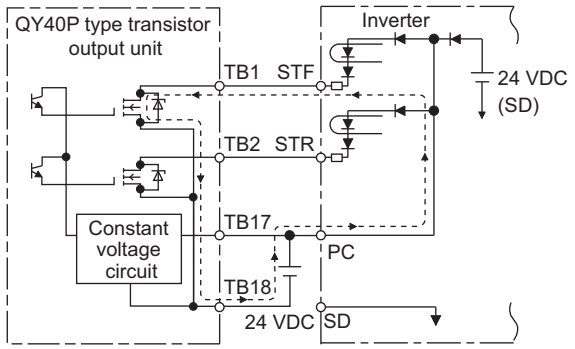	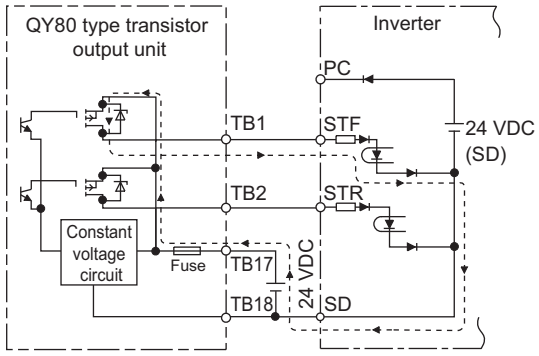

2.6.3 Wiring of control circuit

◆ Control circuit terminal layout

上正科技有限公司
購買、維修 此手冊零組件
電話： 037-466333
Email: service@repairtw.com
Line ID: @2-466333
www.repairtw.com

- Recommended cable gauge: 0.3 to 0.75 mm^2

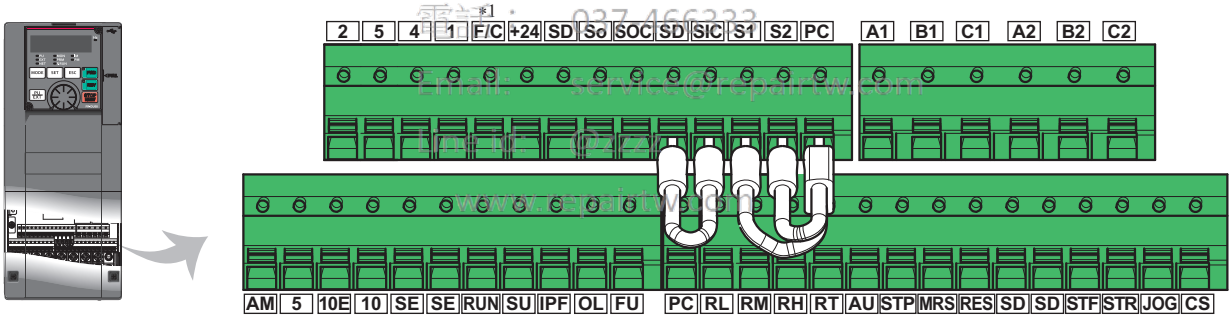

*1 This terminal operates as terminal FM for the type FM inverter. For the type CA inverter, the terminal operates as terminal CA.

◆ Wiring method

■ Power supply connection

For the control circuit wiring, strip off the sheath of a cable, and use it with a blade terminal. For a single wire, strip off the sheath of the wire and apply directly.

Insert the blade terminal or the single wire into a socket of the terminal.

1. Strip off the sheath for the below length. If the length of the sheath peeled is too long, a short circuit may occur with neighboring wires. If the length is too short, wires might come off.
Wire the stripped cable after twisting it to prevent it from becoming loose. Do not solder it.

Cable sheath stripping length

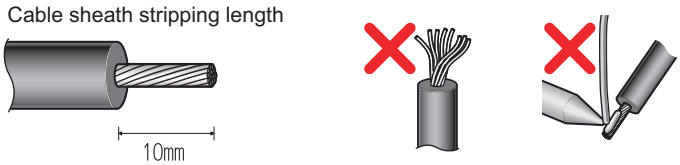

2. Crimp the blade terminal.

Insert wires to a blade terminal, and check that the wires come out for about 0 to 0.5 mm from a sleeve.

Check the condition of the blade terminal after crimping. Do not use a blade terminal of which the crimping is inappropriate, or the face is damaged.

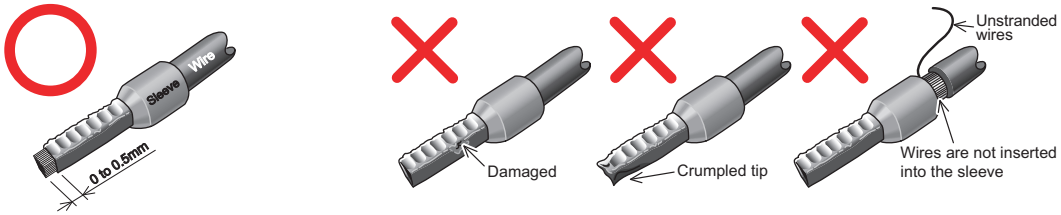

Blade terminals commercially available (as of January 2017)

- Phoenix Contact Co., Ltd.

Cable gauge (mm^2)	Ferrule terminal model			Crimping tool name
	With insulation sleeve	Without insulation sleeve	For UL wire*1	
0.3	AI 0,34-10TQ	—	—	CRIMPFOX 6
0.5	AI 0,5-10WH	—	AI 0,5-10WH-GB	
0.75	AI 0,75-10GY	A 0,75-10	AI 0,75-10GY-GB	
1	AI 1-10RD	A 1-10	AI 1-10RD/1000GB	
1.25, 1.5	AI 1, 5-10BK	A 1, 5-10	AI 1,5-10BK/1000GB*2	
0.75 (two-wire product)	AI-TWIN 2×0,75-10GY	—	—	

*1 A ferrule terminal with an insulation sleeve compatible with the MTW wire which has a thick wire insulation.

*2 Applicable for terminals A1, B1, C1, A2, B2, C2.

- NICHIFU Co., Ltd.

Cable gauge (mm^2)	Blade terminal product number	Insulation cap product number	Crimping tool product number
0.3 to 0.75	BT 0.75-11	VC 0.75	NH 69

上正科技有限公司
購買、維修、技術諮詢服務
電話 037-466199
Email: service@repairtw.com
Line id: @zz22
www.repairtw.com

3. Insert the wires into a socket.

When using a single wire or stranded wires without a blade terminal, push the open/close button all the way down with a flathead screwdriver, and insert the wire.

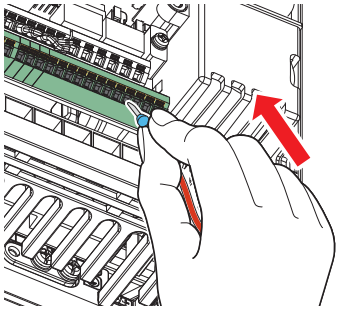

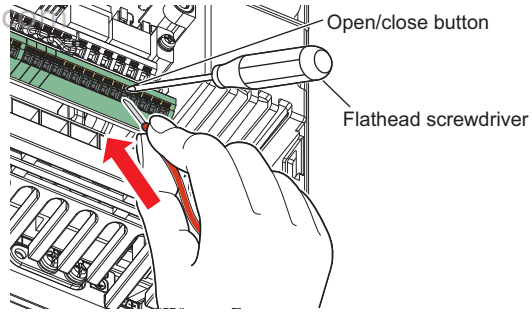

NOTE

- When using stranded wires without a blade terminal, twist enough to avoid short circuit with a nearby terminals or wires.
- Place the flathead screwdriver vertical to the open/close button. In case the blade tip slips, it may cause an inverter damage or injury.

■ Wire removal

Pull the wire while pushing the open/close button all the way down firmly with a flathead screwdriver.

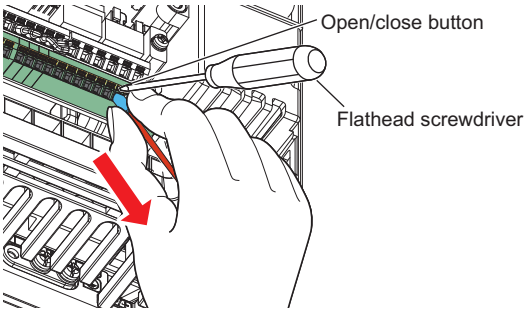

NOTE

- Pulling out the wire forcefully without pushing the open/close button all the way down may damage the terminal block.
- Use a small flathead screwdriver (tip thickness: 0.4 mm / tip width: 2.5 mm).
  If a flathead screwdriver with a narrow tip is used, terminal block may be damaged.
  Commercially available products (as of February 2016)

Product name	Model	Manufacturer
Driver	SZF 0- 0,4 × 2,5	Phoenix Contact Co., Ltd.

- Place the flathead screwdriver vertical to the open/close button. In case the blade tip slips, it may cause an inverter damage or injury.

◆ Common terminals of the control circuit (SD, PC, 5, SE)

- Terminals SD (sink logic), PC (source logic), 5, and SE are common terminals (0 V) for I/O signals. (All common terminals are isolated from each other.) Do not earth (ground) these terminals. Avoid connecting terminal SD (sink logic) with terminal 5, terminal PC (source logic) with terminal 5, and terminal SE with terminal 5.
- In the sink logic, terminal SD is a common terminal for the contact input terminals (STF, STR, STP (STOP), RH, RM, RL, JOG, RT, MRS, RES, AU, and CS) and the pulse train output terminal (FM[*1]). The open collector circuit is isolated from the internal control circuit by photocoupler.
- In the source logic, terminal PC is a common terminal for the contact input terminals (STF, STR, STP (STOP), RH, RM, RL, JOG, RT, MRS, RES, AU, CS). The open collector circuit is isolated from the internal control circuit by photocoupler.
- Terminal 5 is a common terminal for the frequency setting terminals (1, 2, and 4) and the analog output terminals (AM and CA[*2]). It should be protected from external noise using a shielded or twisted cable.
- Terminal SE is a common terminal for the open collector output terminals (RUN, SU, OL, IPF, and FU). The contact input circuit is isolated from the internal control circuit by photocoupler.

*1 Terminal FM is provided in the FM-type inverter.
*2 Terminal CA is provided in the CA-type inverter.

◆ Signal inputs by contactless switches

The contact input terminals of the inverter (STF, STR, STP (STOP), RH, RM, RL, JOG, RT, MRS, RES, AU, and CS) can be controlled using a transistor instead of a contact switch as follows.

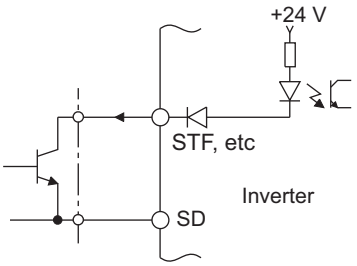

External signal input using transistor (sink logic)

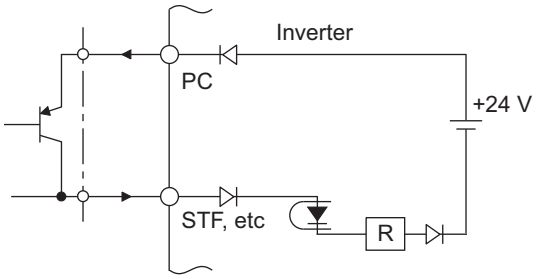

External signal input using transistor (source logic)

上正科技有限公司
傳真：維修 此手冊零組件
電話： 037-466333
Email: service@repairtw.com
Line id: @zzzz
www.repairtw.com

2.6.4 Wiring precautions

- It is recommended to use a cable of 0.3 to 0.75 mm^2 for the connection to the control circuit terminals.
- The wiring length should be 30 m (200 m for terminal FM) at the maximum.
- Use two or more parallel micro-signal contacts or twin contacts to prevent contact faults when using contact inputs since the control circuit input signals are micro-currents.

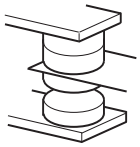

Micro signal contacts

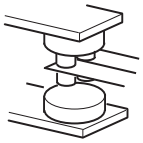

Twin contacts

- To suppress EMI, use shielded or twisted cables for the control circuit terminals and run them away from the main and power circuits (including the 200 V relay sequence circuit). For the cables connected to the control circuit terminals, connect their shields to the common terminal of the connected control circuit terminal. When connecting an external power supply to terminal PC, however, connect the shield of the power supply cable to the negative side of the external power supply. Do not directly earth (ground) the shield to the enclosure, etc.
- Always apply a voltage to the fault output terminals (A1, B1, C1, A2, B2, and C2) via a relay coil, lamp, etc.
- For the FR-F820-03160(75K) or higher and FR-F840-02160(90K) or higher, separate the wiring of the control circuit away from the wiring of the main circuit.
  Make cuts in rubber bush of the inverter side and lead the wires through.

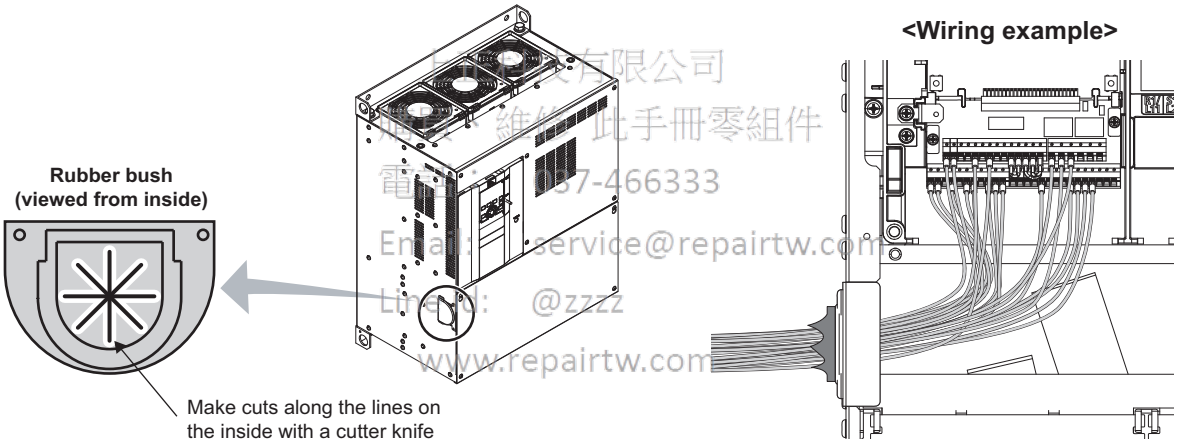

上位機有限公司
提供 維修 此手冊零組件
電話: 137-466333
Email: service@repairtw.com
Line ID: @zzzz
www.repairtw.com

2.6.5 When using separate power supplies for the control circuit and the main circuit

◆ Cable size for the control circuit power supply (terminals R1/L11 and S1/L21)

- Terminal screw size: M4
- Cable gauge: 0.75 to 2 mm^2
- Tightening torque: 1.5 N·m

◆ Connection method

Connection diagram

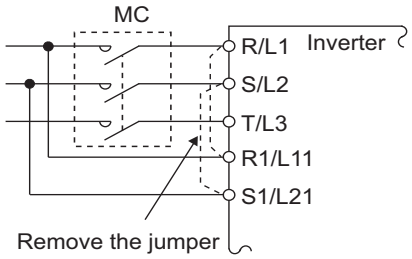

If a fault occurs and the electromagnetic contactor (MC) installed at the inverter's input line is opened, power supply to the control circuit is also stopped and the fault signals cannot be output anymore. Terminals R1/L11 and S1/L21 of the control circuit are provided to keep outputting the fault signals in such a case. Follow the following steps to wire terminals R1/L11 and S1/L21 on the inverter to the power input lines of the MC. Do not connect the power cable to incorrect terminals. Doing so may damage the inverter.

- A820-00167(3.7K) or lower, FR-F840-00126(5.5K) or lower

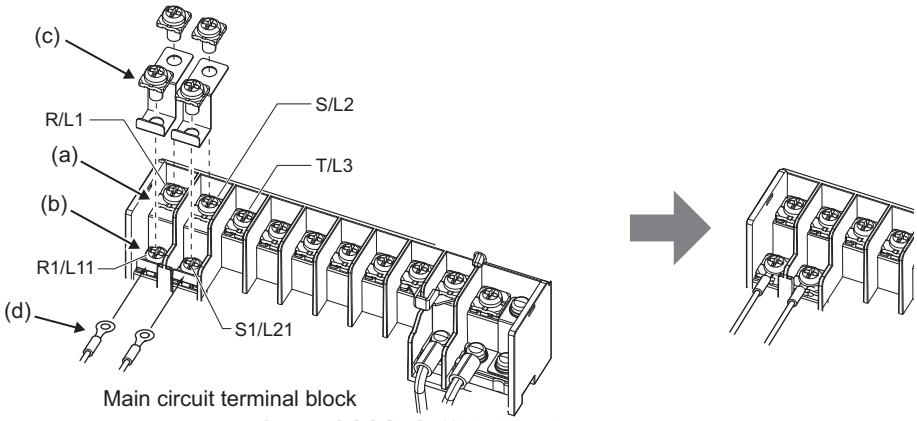

(a)Remove the upper screws.
(b)Remove the lower screws.
(c)Remove the jumper.
(d)Connect the separate power cable for the control circuit to the lower terminals (R1/L11, S1/L21).

上正科技有限公司
購買、維修 此手冊零組件
電話： 03-7466333
Email: service@repairtw.com
Line ID: @zzzz
www.repairtw.com

- FR-F820-00340(7.5K) to FR-F820-00630(15K), FR-F840-00170(7.5K) to FR-F840-00380(18.5K)

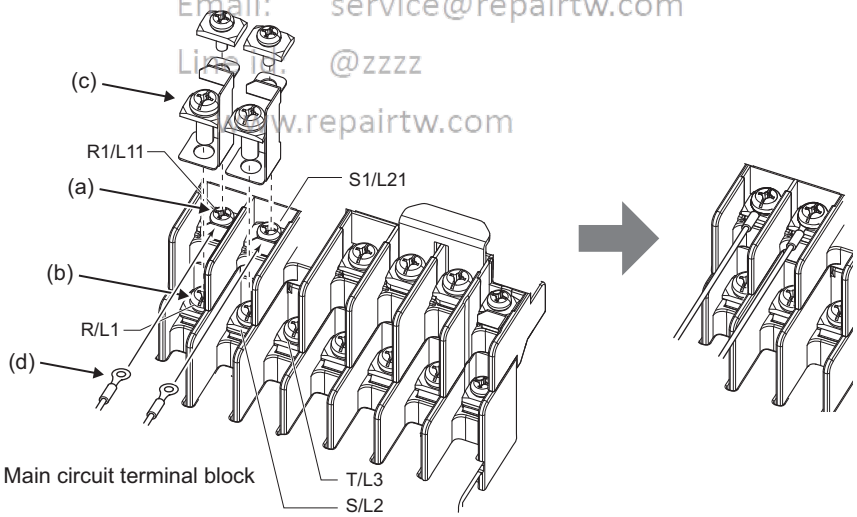

(a)Remove the upper screws.
(b)Remove the lower screws.
(c)Remove the jumper.
(d)Connect the separate power cable for the control circuit to the upper terminals (R1/L11, S1/L21).

- FR-F820-00770(18.5K) or higher, FR-F840-00470(22K) or higher

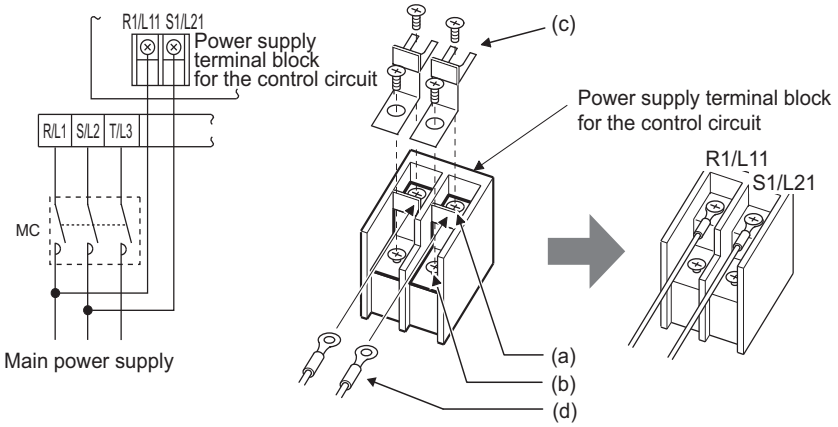

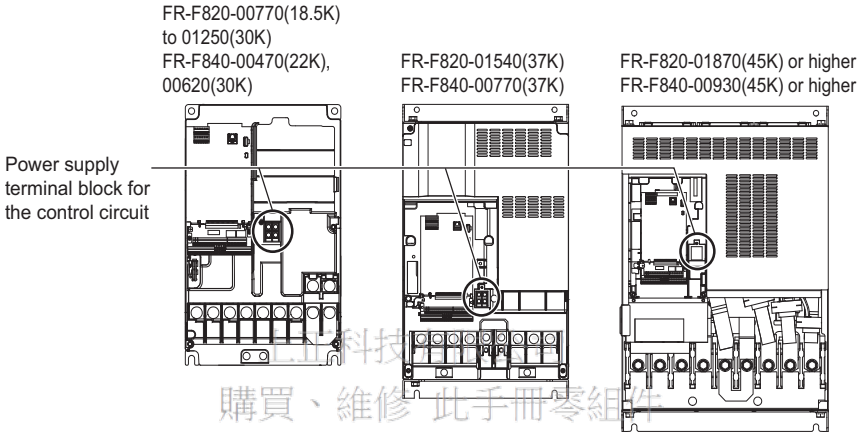

正工科技有限公司
購買、維修 此手冊零組件
電話： 037-466333
Email: service@repairtw.com
Line id: @zzzz
www.repairtw.com

(a)Remove the upper screws.
(b)Remove the lower screws.
(c)Pull the jumper toward you to remove.
(d)Connect the separate power cable for the control circuit to the upper terminals (R1/L11, S1/L21).

NOTE

- When using separate power supplies, always remove the jumpers across terminals R/L1 and R1/L11 and across S/L2 and S1/L21. The inverter may be damaged if the jumpers are not removed.
- When the control circuit power is supplied from other than the input line of the MC, the voltage of the separate power supply must be the same as that of the main control circuit .
- The power capacity necessary when separate power is supplied from R1/L11 and S1/L21 differs according to the inverter capacity.

Inverter	Power supply capacity
FR-F820-00630(15K) or lower FR-F840-00380(18.5K) or lower	60 VA
FR-F820-00770(18.5K) or higher FR-F840-00470(22K) or higher	80 VA

- If the main circuit power is switched OFF (for 0.1 seconds or more) then ON again, the inverter is reset and a fault output will not be held.

2.6.6 When supplying 24 V external power to the control circuit

Connect the 24 V external power supply across terminals +24 and SD to turn the I/O terminal ON/OFF operation, keep the operation panel ON, and carry out communication during communication operation even at power-OFF state of inverter's main circuit power supply. When the main circuit power supply is turned ON, the power supply is switched from the 24 V external power supply to the main circuit power supply.

◆ Specification of the applied 24 V external power supply

Item	Rated specification
Input voltage	23 to 25.5 VDC
Input current	1.4 A or less

Commercially available products (as of February 15)

Model	Manufacturer
S8JX-N05024C[*1] Specifications: Capacity 50 W, output voltage 24 VDC, output current 2.1 A Installation method: Front installation with cover	OMRON Corporation
S8VS-06024[*1] Specifications: Capacity 60 W, output voltage 24 VDC, output current 2.5 A Installation method: DIN rail installation	

*1 For the latest information about OMRON power supply, contact OMRON corporation.

◆ Starting and stopping the 24 V external power supply operation

上正科技有限公司
購買、維修、此手冊零組件
電話： 037-466333
Email: service@repairtw.com
Line id: @2222
www.repairtw.com

- Supplying 24 V external power while the main circuit power is OFF starts the 24 V external power supply operation. Likewise, turning OFF the main circuit power while supplying 24 V external power starts the 24 V external power supply operation.
- Turning ON the main circuit power stops the 24 V external power supply operation and enables the normal operation.

NOTE

- When the 24 V external power is supplied while the main circuit power supply is OFF, the inverter operation is disabled.
- In the initial setting, when the main power supply is turned ON during the 24 V external power supply operation, a reset is performed in the inverter, then the power supply changes to the main circuit power supply. (The reset can be disabled using **Pr.30**. (Refer to page 539.))

◆ Confirming the 24 V external power supply input

- During the 24 V external power supply operation, "EV" blinks on the operation panel. The alarm lamp also blinks. Thus, the 24 V external power supply operation can be confirmed even when the operation panel is removed.

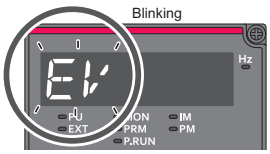

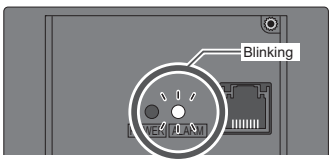

- During the 24 V external power supply operation, the 24 V external power supply operation (EV) signal is output. To use the EV signal, set "68 (positive logic) or 168 (negative logic)" in one of **Pr.190 to Pr.196 (Output terminal function selection)** to assign function to an output terminal.

◆ Operation while the 24 V external power is supplied

- Fault history and parameters can be read and parameters can be written (when the parameter write from the operation panel is enabled) using the operation panel keys.
- The safety stop function is invalid during the 24 V external power supply operation.
- During the 24 V external power supply operation, the monitor items and signals related to inputs to main circuit power supply, such as the output current, converter output voltage, and IPF signal, are invalid.

- The alarms, which have occurred when the main circuit power supply is ON, continue to be output after the power supply is changed to the 24 V external power supply. Perform the inverter reset or turn OFF then ON the power to reset the faults.
- If the power supply changes from the main circuit power supply to the 24 V external power supply while measuring the main circuit capacitor's life, the measurement completes after the power supply changes back to the main circuit power supply (**Pr.259** = "3").
- The output data is retained when "1 or 11" is set in **Pr.495 Remote output selection**.

NOTE

- Inrush current equal to or higher than the 24 V external power supply specification may flow at power-ON. Confirm that the power supply and other devices are not affected by the inrush current and the voltage drop caused by it. Depending on the power supply, the inrush current protection may be activated to disable the power supply. Select the power supply and capacity carefully.
- When the wiring length between the external power supply and the inverter is long, the voltage often drops. Select the appropriate wiring size and length to keep the voltage in the rated input voltage range.
- In a serial connection of several inverters, the current increases when it flows through the inverter wiring near the power supply. The increase of the current causes voltage to drop further. When connecting different inverters to different power supplies, use the inverters after confirming that the input voltage of each inverter is within the rated input voltage range. Depending on the power supply, the inrush current protection may be activated to disable the power supply. Select the power supply and capacity carefully.
- "E.SAF" or "E.P24" may appear when the start-up time of the 24 V power supply is too long (less than 1.5 V/s) in the 24 V external power supply operation.
- "E.P24" may appear when the 24 V external power supply input voltage is low. Check the external power supply input.
- Do not touch the control circuit terminal block (circuit board) during the 24 V power supply operation (when conducted). Otherwise you may get an electric shock or burn.

2.6.7 Safety stop function

上正科技有限公司
購買、維修 此手冊零組件
電話： 037-466333
Email: service@repairtw.com
Line id: @zzzz
www.repairtw.com

◆ Function description

The terminals related to the safety stop function are as follows.

Terminal symbol	Terminal function description	
S1[*1]	Input terminal as the safety stop channel 1.	Status of both the circuit between terminals S1 and SIC and the circuit between terminals S2 and SIC Open: Safety stop is activated. Shorted: Safety stop is not activated
S2[*1]	Input terminal as the safety stop channel 2.	
SIC[*1]	Common terminal for S1 and S2.	
So (SO)	Output terminal used for fault detection and fault indication display. The terminal is ON (conducted) while no internal safety circuit failure[*2] exists.	OFF: Internal safety circuit failure[*2] ON: No internal safety circuit failure[*2]
SOC	Open collector output (terminal So (SO)) common	

*1 In the initial status, terminals S1 and PC, S2 and PC, and SIC and SD are respectively shorted with shorting wires. To enable the safety stop function, remove all the shorting wires, and then connect a safety relay module as shown in the connection diagram.

*2 When any fault listed on the next page occurs in the internal safety circuit, the corresponding indication is shown on the operation panel.

NOTE

- Terminal So (SO) can be used to display a fault indication and to prevent restarting of the inverter. The signal output from terminal So (SO) cannot be used to input a safety stop signal to other devices.

◆ Connection diagram

To prevent restart at failure occurrence, connect terminals So (SO) and SOC to the reset button, which are the feedback input terminals of the safety relay module.

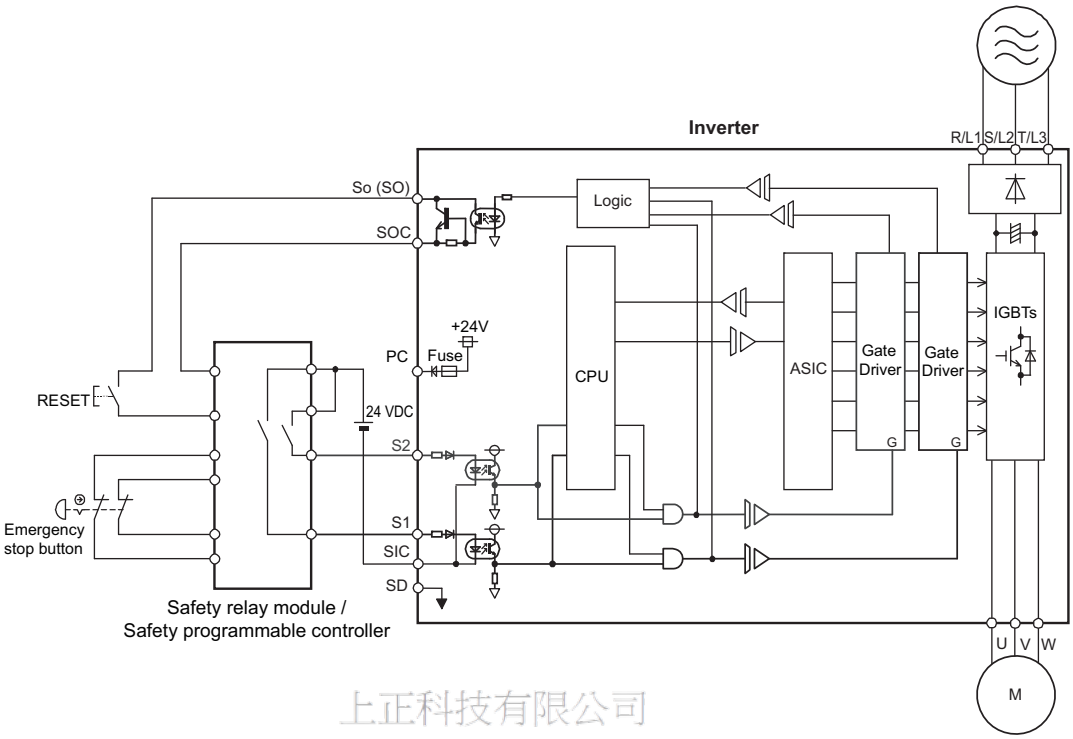

上正科技有限公司
購買、維修 此手冊零組件
電話：037-466333
Email: service@repairtw.com
Line id: @zzzz
www.repairtw.com

◆ Safety stop function operation

Input power	Internal safety circuit status	Input terminal *1*2		Output terminal	Output signal *8*9*10	Inverter operating status	Operation panel indication	
		S1	S2	So (SO)	SAFE		E.SAF *6	SA *7
OFF	—	—	—	OFF	OFF	Output shutoff (Safe state)	Not displayed	Not displayed
ON	Normal	ON	ON	ON *3	OFF	Operation enabled	Not displayed	Not displayed
	Normal	ON	OFF	OFF *4	OFF *4	Output shutoff (Safe state)	Displayed	Displayed
	Normal	OFF	ON	OFF *4	OFF *4	Output shutoff (Safe state)	Displayed	Displayed
	Normal	OFF	OFF	ON *3	ON *3	Output shutoff (Safe state)	Not displayed	Displayed
	Fault	ON	ON	OFF	OFF	Output shutoff (Safe state)	Displayed	Not displayed *5
	Fault	ON	OFF	OFF	OFF	Output shutoff (Safe state)	Displayed	Displayed
	Fault	OFF	ON	OFF	OFF	Output shutoff (Safe state)	Displayed	Displayed
	Fault	OFF	OFF	OFF	OFF	Output shutoff (Safe state)	Displayed	Displayed

*1 The terminal ON state shows that the terminal is conducted (the line is closed), and the OFF state shows that the terminal is not conducted (the line is open).

*2 When not using the safety stop function, short across terminals S1 and PC, S2 and PC, and SIC and SD to use the inverter. (In the initial status, terminals S1 and PC, S2 and PC, and SIC and SD are respectively shorted with shorting wires.)

*3 If any of the protective functions shown in the following table is activated, terminal So (SO) and the SAFE signal turn OFF.

Fault type	Operation panel indication
Option fault	E.OPT
Communication option fault	E.OP1
Parameter storage device fault	E.PE
Retry count excess	E.RET
Parameter storage device fault	E.PE2
Operation panel power supply short circuit/RS-485 terminals power supply short circuit	E.CTE

Fault type	Operation panel indication
24 VDC power fault	E.P24
Safety circuit fault	E.SAF
Overspeed occurrence	E.OS
CPU fault	E.CPU
	E.5 to E.7
Internal circuit fault	E.13

*4 When the internal safety circuit is operated normally (no faults occurs), terminal So (SO) and the SAFE signal remains ON until "E.SAF" is displayed. Terminal So (SO) and the SAFE signal turns OFF when "E.SAF" is displayed.

*5 "SA" is displayed when terminals S1 and S2 are identified as OFF due to a fault occurred in the internal safety circuit.

*6 If another fault occurs when the fault E.SAF occurs, the other fault indication may be displayed.

*7 If another warning occurs when the warning SA occurs, the other warning indication may be displayed.
*8 The ON/OFF state of the output signal is the one for the positive logic. The ON and OFF are reversed for the negative logic.
*9 For the SAFE signal, refer to the following table and use any of **Pr.190 to Pr.196 (output terminal function selection)** to assign the function to the output terminal.

Output signal	Pr.190 to Pr.196 settings	
	Positive logic	Negative logic
SAFE	80	180

*10 The use of SAFE signal has not been certified for compliance with safety standards.

For more details, refer to the Safety Stop Function Instruction Manual.
Find a PDF file of the manual in the CD-ROM enclosed with the product.

上正科技有限公司
購買、維修 此手冊零組件
電話： 037-466333
Email: service@repairtw.com
Line id: @zzzz
www.repairtw.com

2.7 Communication connectors and terminals

2.7.1 PU connector

◆ Mounting the operation panel or the parameter unit on the enclosure surface

- Having an operation panel or a parameter unit on the enclosure surface is convenient. With a connection cable, the operation panel or the parameter unit can be mounted to the enclosure surface and connected to the inverter.
  Use the cable option FR-CB2[ ] or the following connector and cable available on the market. (To install the operation panel, the optional connector (FR-ADP) is also required.)
  Securely insert one end of the cable into the PU connector and the other end into the connection connector on the parameter unit or the FR-ADP attached on the operation panel until the stoppers are fixed.

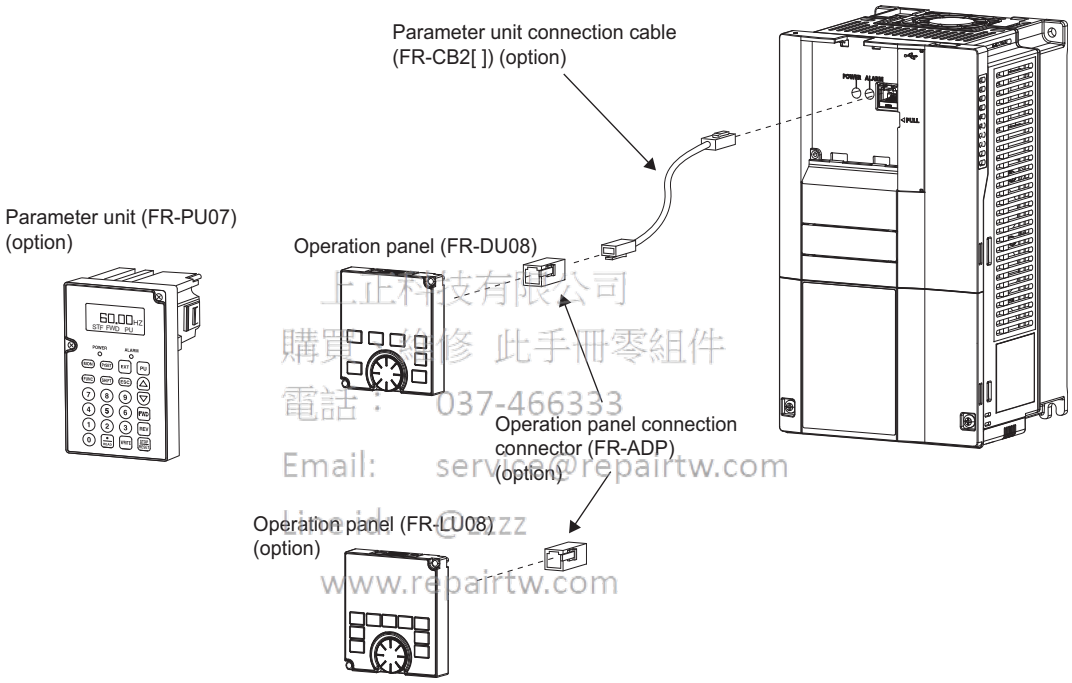

上正科技有限公司
購買 維修 此手冊零組件
電話： 037-466333
Email: service@repairtw.com
Line id: @zzz
www.repairtw.com

NOTE

- Refer to the following table when fabricating the cable on the user side. Keep the total cable length within 20 m.
- Commercially available products (as of February 2015)

Name	Model	Manufacturer
Communication cable	SGLPEV-T (Cat5e/300 m) 24AWG × 4P	Mitsubishi Cable Industries, Ltd.
RJ-45 connector	5-554720-3	Tyco Electronics

◆ Communication operation

- Using the PU connector as a computer network port enables communication operation from a personal computer, etc. When the PU connector is connected with a personal, FA or other computer by a communication cable, a user program can run to monitor the inverter or read and write parameters.
  Communication can be performed with the Mitsubishi inverter protocol (computer link operation).
  For the details, refer to page 473.

2.7.2 USB connector

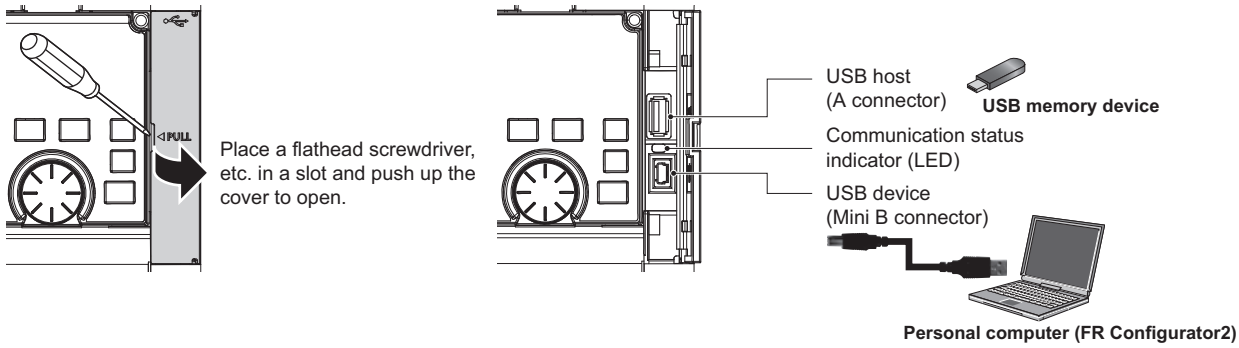

◆ USB host communication

Interface		Conforms to USB 1.1
Transmission speed		12 Mbps
Wiring length		Maximum 5 m
Connector		USB A connector (receptacle)
Compatible USB memory	**Format**	FAT32
	Capacity	1 GB or more (used in the recorder mode of the trace function)
	Encryption function	Not available

- Different inverter data can be saved in a USB memory device.
  The USB host communication enables the following functions.

Function	Description	Refer to page
Parameter copy	• Copies the parameter settings from the inverter to the USB memory device. A maximum of 99 parameter setting files can be saved in a USB memory device. • The parameter setting data copied in the USB memory device can be copied to other inverters. This function is useful in backing up the parameter setting or for sharing the parameter setting among multiple inverters. • The parameter setting file can be copied onto a personal computer from the USB memory device and edited using FR Configurator2.	555
Trace	• The monitoring data and output status of the signals can be saved in a USB memory device. • The saved data can be imported to FR Configurator2 to diagnose the operating status of the inverter.	465
PLC function data copy	• This function copies the PLC function project data to a USB memory device when the PLC function is used. • The PLC function project data copied in the USB memory device can be copied to other inverters. • This function is useful in backing up the parameter setting and for allowing multiple inverters to operate by the same sequence programs.	462

上正科技有限公司
購買、維修、出手用零組件
電話: 037-466333
Email: service@repairtw.com
Line Id: @zzzz
www.repairtw.com

- When the inverter recognizes the USB memory device without any problem, "USb.-A" is briefly displayed on the operation panel.
- When the USB memory device is removed, "USb.-" is briefly displayed on the operation panel.
- The operating status of the USB host can be checked on the LED display of the inverter.

LED display status	Operating status
OFF	No USB connection.
ON	The communication is established between the inverter and the USB device.
Fast blinking	The USB memory device is being accessed. (Do not remove the USB memory device.)
Slow blinking	Error in the USB connection.

- When a device such as a USB charger is connected to the USB connector and an excessive current (500 mA or higher) flows, USB host error "UF" (UF warning) is displayed on the operation panel.
- When the UF warning appears, the USB error can be canceled by removing the USB device and setting **Pr.1049** = "1". (The UF warning can also be canceled by resetting the inverter power or resetting with the RES signal.)

NOTE

- Do not connect devices other than a USB memory device to the inverter.
- If a USB device is connected to the inverter via a USB hub, the inverter cannot recognize the USB memory device properly.

◆ USB device communication

The inverter can be connected to a personal computer with a USB (ver. 1.1) cable.
Parameter setting and monitoring can be performed by using FR Configurator2.

Interface	Conforms to USB 1.1
Transmission speed	12 Mbps
Wiring length	Maximum 5 m
Connector	USB mini B connector (receptacle)
Power supply	Self-powered

NOTE

- For the details of FR Configurator2, refer to the Instruction Manual of FR Configurator2.

2.7.3 RS-485 terminal block

◆ Communication operation

Conforming standard	EIA-485 (RS-485)
Transmission format	Multidrop link
Communication speed	maximum 115200 bps
Overall length	500 m
Connection cable	Twisted pair cable (4 pairs)

上正科技有限公司
購買、維修 此手冊零組件
電話： 037-466333
Email: service@repairtw.com
Line id: @zzzz
www.repairtw.com

The RS-485 terminals enable communication operation from a personal computer, etc. When the PU connector is connected with a personal, FA or other computer by a communication cable, a user program can run to monitor the inverter or read and write parameters.
Communication can be performed with the Mitsubishi inverter protocol (computer link operation) and MODBUS RTU protocol.
For the details, refer to page 475.

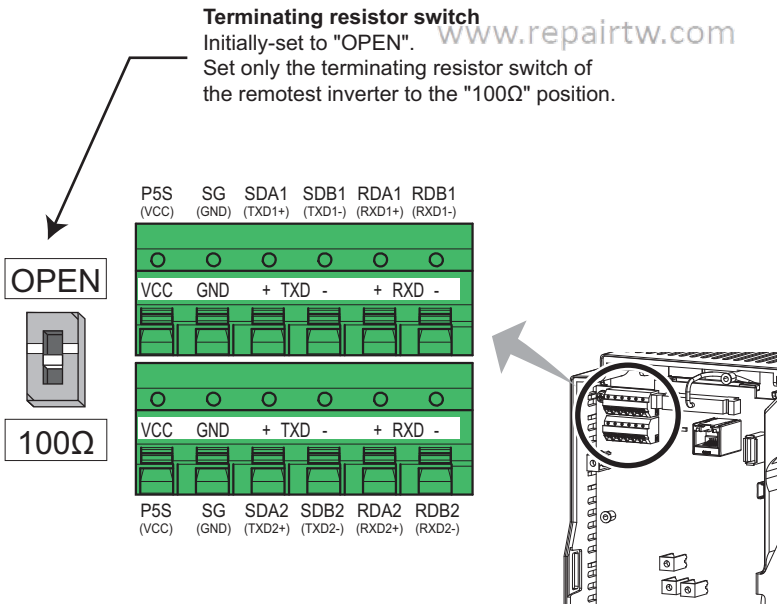

2.8 Connection of stand-alone option units

The inverter accepts a variety of stand-alone option units as required.
Incorrect connection will cause inverter damage or accident. Connect and operate the option unit carefully in accordance with the Instruction Manual of the corresponding option unit.

2.8.1 Connection of the brake unit (FR-BU2)

Connect the brake unit (FR-BU2(-H)) as follows to improve the braking capability during deceleration.

◆ Connection example with the GRZG type discharging resistor

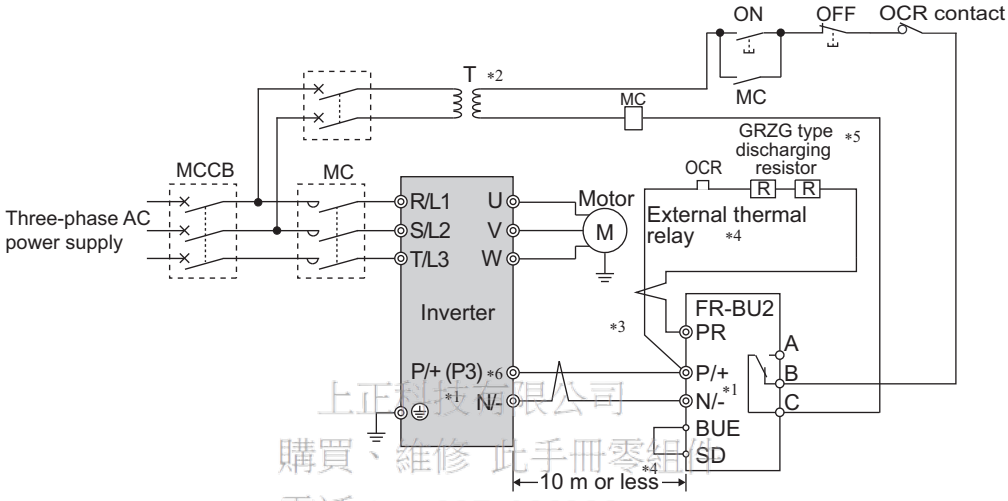

*1 When wiring, make sure to match the terminal symbols (P/+, N/-) on the inverter and on the brake unit (FR-BU2). (Incorrect connection will damage the inverter and brake unit.)
*2 When the power supply is 400 V class, install a stepdown transformer.
*3 The wiring distance between the inverter, brake unit (FR-BU2) and discharging resistor must be within 5 m. Even when the cable is twisted, the wiring length must be within 10 m.
*4 It is recommended to install an external thermal relay to prevent overheat of the discharging resistor.
*5 For the connection method of the discharging resistor, refer to the Instruction Manual of the FR-BU2.
*6 Terminal P3 is equipped in the FR-F820-00770(18.5K) to 01250(30K) and the FR-F840-00470(22K) to 01800(75K). Terminal P3 has the same function as terminal P\+ on the inverter.

上正科技有限公司
購買、維修 此手冊零組件
電話： 027-466332
Email: service@repairtw.com
Line id: @zzzz
www.repairtw.com

- Recommended external thermal relay

Brake unit	Discharging resistor	Recommended external thermal relay
FR-BU2-1.5K	GZG 300W-50Ω (one)	TH-T25-1.3A
FR-BU2-3.7K	GRZG 200-10Ω (three in series)	TH-T25-3.6A
FR-BU2-7.5K	GRZG 300-5Ω (four in series)	TH-T25-6.6A
FR-BU2-15K	GRZG 400-2Ω (six in series)	TH-T25-11A
FR-BU2-H7.5K	GRZG 200-10Ω (six in series)	TH-T25-3.6A
FR-BU2-H15K	GRZG 300-5Ω (eight in series)	TH-T25-6.6A
FR-BU2-H30K	GRZG 400-2Ω (twelve in series)	TH-T25-11A

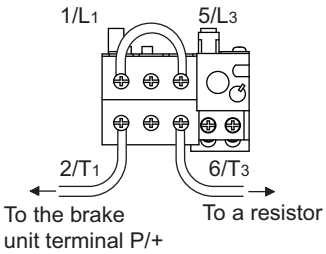

NOTE

- Set "1" in **Pr.0 Brake mode selection** in the FR-BU2 to use a GRZG type discharging resistor.
- Do not remove the jumper across terminals P/+ and P1 except when connecting a DC reactor (FR-HEL).

◆ Connection example with the FR-BR(-H) resistor unit

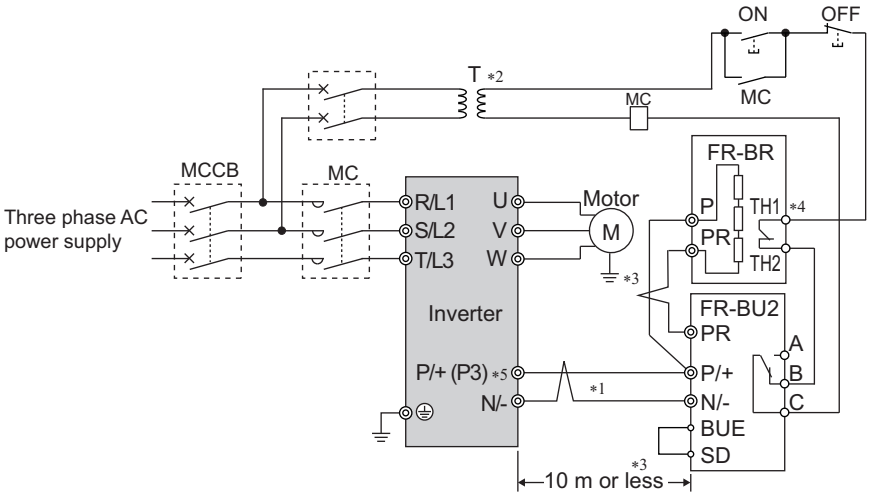

*1 When wiring, make sure to match the terminal symbols (P/+, N/-) on the inverter and on the brake unit (FR-BU2). (Incorrect connection will damage the inverter and brake unit.)

*2 When the power supply is 400 V class, install a stepdown transformer.

*3 The wiring distance between the inverter, brake unit (FR-BU2) and resistor unit (FR-BR) must be within 5 m. Even when the cable is twisted, the wiring length must be within 10 m.

*4 The contact between TH1 and TH2 is closed in the normal status and is open at a fault.

*5 Terminal P3 is equipped in the FR-F820-00770(18.5K) to 01250(30K) and the FR-F840-00470(22K) to 01800(75K). Terminal P3 has the same function as terminal P\+ on the inverter.

NOTE

- Do not remove the jumper across terminals P/+ and P1 except when connecting a DC reactor (FR-HEL).

上正科技有限公司
購買、維修 此手冊零組件
電話： 037-466333
Email: service@repairtw.com
Line Id: @zzz
www.repairtw.com

◆ Connection example with the MT-BR5 type resistor unit

After making sure that the wiring is correct and secure, set "1" in **Pr.30 Regenerative function selection**.

Set "2" in **Pr.0 Brake mode selection** in the brake unit FR-BU2.

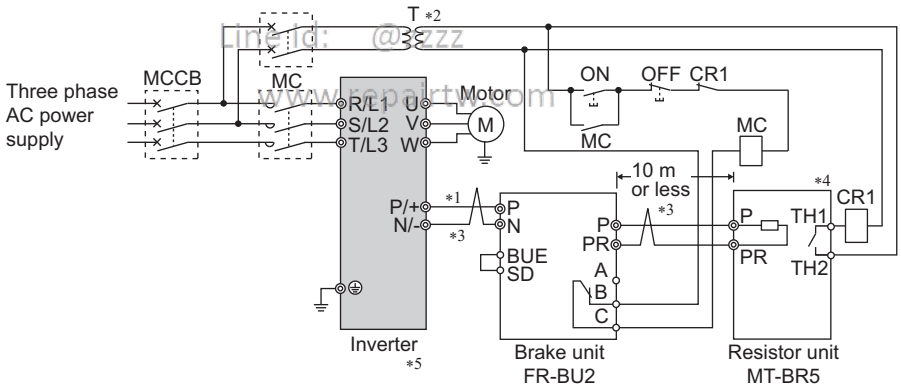

*1 When wiring, make sure to match the terminal symbols (P/+, N/-) on the inverter and on the brake unit (FR-BU2). (Incorrect connection will damage the inverter and brake unit.)

*2 When the power supply is 400 V class, install a stepdown transformer.

*3 The wiring distance between the inverter, brake unit (FR-BU2) and resistor unit (FR-BR) must be within 5 m. Even when the cable is twisted, the wiring length must be within 10 m.

*4 The contact between TH1 and TH2 is open in the normal status and is closed at a fault.

*5 The CN8 connector used with the MT-BU5 type brake unit is not used.

NOTE

- The warning "oL" of the stall prevention (overvoltage) does not occur while **Pr.30 Regenerative function selection** = "1". (Refer to page 539.)

2.8.2 Connection of the brake unit (FR-BU)

Connect the brake unit (FR-BU(-H)) as follows to improve the braking capability during deceleration. The FR-BU is compatible with the FR-F820-02330(55K) or lower and the FR-F840-01160(55K) and lower.

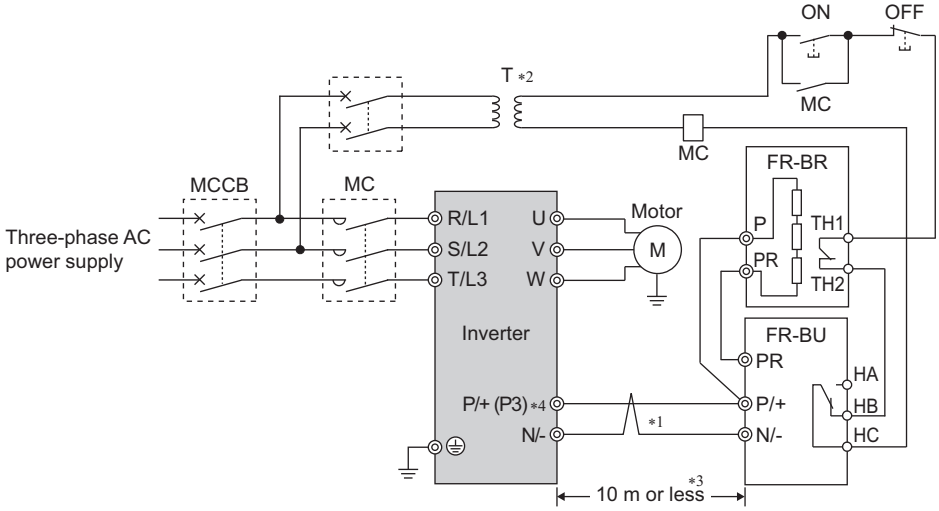

*1 When wiring, make sure to match the terminal symbols (P/+, N/-) on the inverter and on the brake unit (FR-BU(-H)). (Incorrect connection will damage the inverter.)

*2 When the power supply is 400 V class, install a stepdown transformer.

*3 The wiring distance between the inverter, brake unit (FR-BU) and resistor unit (FR-BR) must be within 5 m. Even when the cable is twisted, the wiring length must be within 10 m.

*4 Terminal P3 is equipped in the FR-F820-00770(18.5K) to 01250(30K) and the FR-F840-00470(22K) to 01800(75K). Terminal P3 has the same function as terminal P\+ on the inverter.

上正科技有限公司
購買、維修、此手冊零組件
電話： 037-466333
Email: service@repairtw.com
Line Id: @2222
www.repairtw.com

NOTE

- If the transistors in the brake unit should become faulty, the resistor will overheat. Install a magnetic contactor on the inverter's input side and configure a circuit that shut off the current in case of a fault.
- Do not remove the jumper across terminals P/+ and P1 except when connecting a DC reactor (FR-HEL).

2.8.3 Connection of the brake unit (BU type)

Connect the brake unit (BU type) correctly as follows. Incorrect connection will damage the inverter. Remove the jumpers across terminals HB and PC and terminals TB and HC on the brake unit, and fit one across terminals PC and TB. The The BU type brake unit is compatible with the FR-F820-02330(55K) or lower and the FR-F840-01160(55K) or lower.

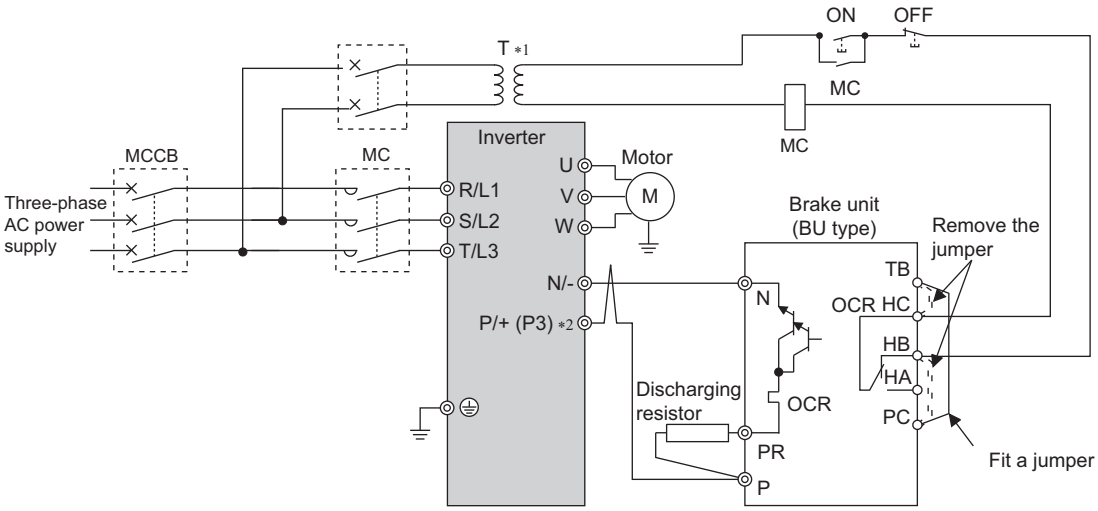

*1 When the power supply is 400 V class, install a stepdown transformer.

*2 Terminal P3 is equipped in the FR-F820-00770(18.5K) to 01250(30K) and the FR-F840-00470(22K) to 01800(75K). Terminal P3 has the same function as terminal P\+ on the inverter.

NOTE

- The wiring distance between the inverter, brake unit, and discharging resistor must be within 2 m. Even when the cable is twisted, the wiring length must be within 5 m.
- If the transistors in the brake unit should become faulty, the resistor will overheat and result in a fire. Install a magnetic contactor on the inverter's input side and configure a circuit that shut off the current in case of a fault.
- Do not remove the jumper across terminals P/+ and P1 except when connecting a DC reactor (FR-HEL).

2.8.4 Connection of the high power factor converter (FR-HC2)

When connecting the high power factor converter (FR-HC2) to suppress power harmonics, perform wiring securely as follows. Incorrect connection will damage the high power factor converter and the inverter.

After making sure that the wiring is correct and secure, set the rated motor voltage in **Pr.19 Base frequency voltage** (under V/F control) or **Pr.83 Rated motor voltage** (under other than V/F control) and "2" in **Pr.30 Regenerative function selection**. (Refer to page 539.)

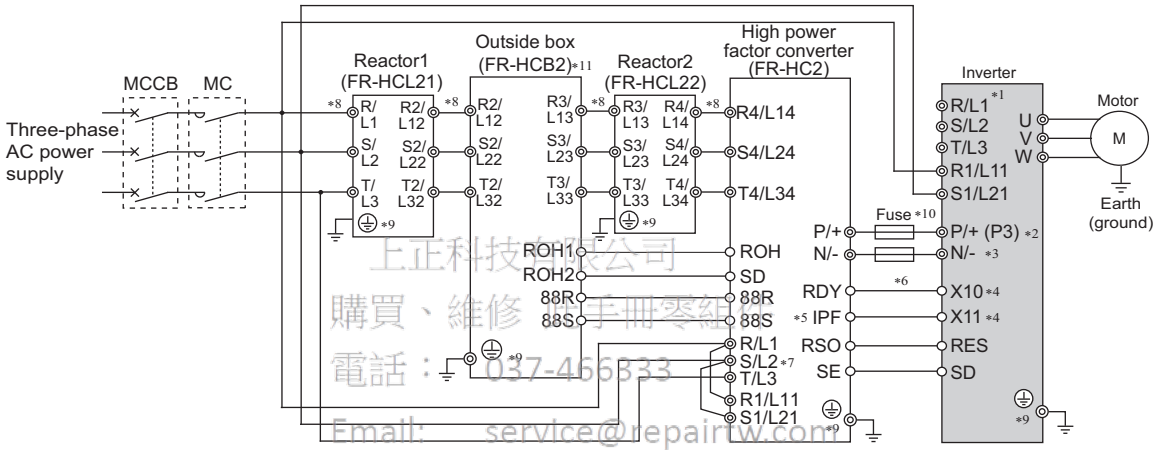

上正科技有限公司
購買、維修 原手冊零組件
電話：037-466333
Email: service@repairtw.com
Line ID: @zzzz
www.repairtw.com

*1 Remove jumpers across terminals R/L1 and R1/L11 as well as across terminals S/L2 and S1/L21, and connect the power supply for the control circuit to terminals R1/L11 and S1/L21. Do not connect anything to power input terminals (R/L1, S/L2, and T/L3). Incorrect connection will damage the inverter. (The E.OPT fault (Option fault) occurs. (Refer to page 579.))

*2 Terminal P3 is equipped in the FR-F820-00770(18.5K) to 01250(30K), and FR-F840-00470(22K) to 01800(75K). When connecting multiple inverters in parallel, always use either terminal P/+ or P3 for the connection. (Do not use terminals P/+ and P3 together.)

*3 Do not install an MCCB across terminals P/+ and N/- (between terminals P and P/+ or between terminals N and N/-). Connecting the opposite polarity of terminals N/- and P/+ will damage the inverter.

*4 Use **Pr.178 to Pr.189 (Input terminal function selection)** to assign the terminals used for the X10 (X11) signal. (Refer to page 355.)
For RS-485 or any other communication where the start command is only transmitted once, use the X11 signal to save the operation mode at the time of an instantaneous power failure.

*5 Assign the IPF signal to a terminal on the FR-HC2. (Refer to the Instruction Manual of the FR-HC2.)

*6 Always connect terminal RDY on the FR-HC2 to a terminal where the X10 signal or MRS signal is assigned on the inverter. Always connect terminal SE on the FR-HC2 to terminal SD on the inverter. Not connecting these terminals may damage the FR-HC2.

*7 Always connect terminals R/L1, S/L2, and T/L3 on the FR-HC2 to the power supply. Operating the inverter without connecting them will damage the FR-HC2.

*8 Do not install an MCCB or MC across terminals (R/L1, S/L2, T/L3) on the reactor 1 and terminals (R4/L14, S4/L24, T4/L34) on the FR-HC2. Doing so disrupts proper operation.

*9 Securely perform grounding (earthing) by using the grounding (earthing) terminal.

*10 Installation of a fuse is recommended. (Refer to the Instruction Manual of the FR-HC2.)

*11 Outside box is not available for the FR-HC2-H280K or higher. Connect filter capacitors, inrush current limit resistors, and magnetic contactors. (Refer to the Instruction Manual of the FR-HC2.)

NOTE

- The voltage phases of terminals R/L1, S/L2, and T/L3 and the voltage phases of terminals R4/L14, S4/L24, and T4/L34 must be matched.
- The control logic (sink logic/source logic) of the high power factor converter and the inverter must be matched. (Refer to page 62.)
- Do not connect a DC reactor (FR-HEL) to the inverter when the FR-HC2 is connected.

2.8.5 Connection of the power regeneration common converter (FR-CV)

When wiring for connecting the power regeneration common converter (FR-CV) to the inverter, make sure to match the terminal symbols (P/+, N/-) on the inverter and on the power regeneration common converter.

The FR-CV is compatible with the FR-F820-02330(55K) or lower and the FR-F840-01160(55K) or lower.

After making sure that the wiring is correct and secure, set "2" in **Pr.30 Regenerative function selection**. (Refer to page 539.)

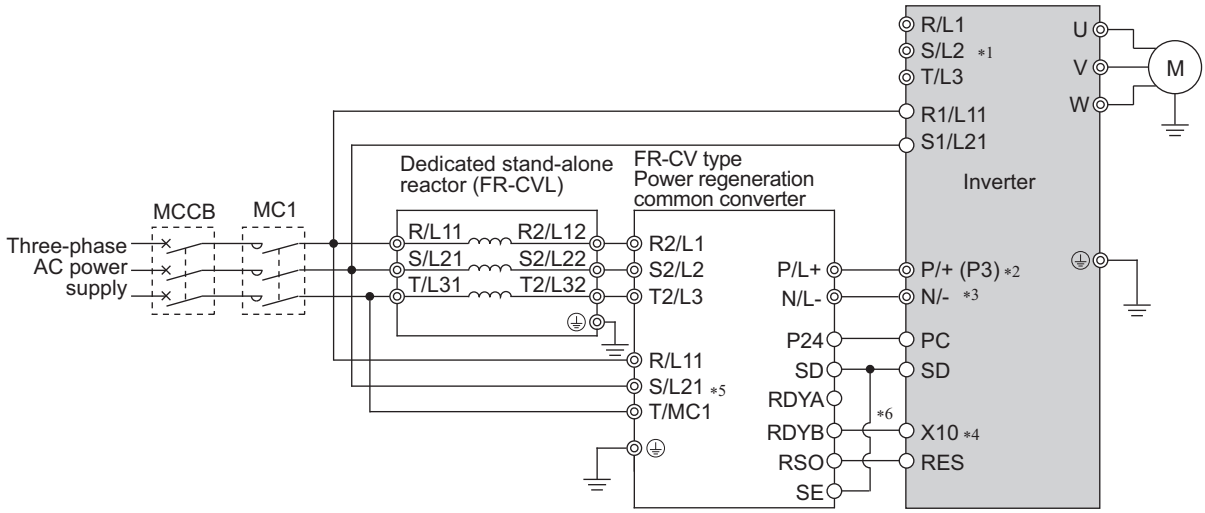

*1 Remove jumpers across terminals R/L1 and R1/L11 as well as across terminals S/L2 and S1/L21, and connect the power supply for the control circuit to terminals R1/L11 and S1/L21. Do not connect anything to power input terminals (R/L1, S/L2, and T/L3). Incorrect connection will damage the inverter. (The E.OPT fault (Option fault) occurs. (Refer to page 579.))

*2 Terminal P3 is equipped in the FR-F820-00770(18.5K) to 01250(30K), and FR-F840-00470(22K) to 01800(75K). When connecting multiple inverters in parallel, always use either terminal P/+ or P3 for the connection. (Do not use terminals P/+ and P3 together.)

*3 Do not install an MCCB across terminals P/+ and N/- (between terminals P/L+ and P/+ or between N/L- and N/-). Connecting the opposite polarity of terminals N/- and P/+ will damage the inverter.

*4 Use **Pr.178 to Pr.189 (Input terminal function selection)** to assign the terminals used for the X10 signal. (Refer to page 355.)

*5 Be sure to connect the power supply and terminals R/L11, S/L21, and T/MC1. Operating the inverter without connecting them will damage the power regeneration common converter.

*6 Always connect terminal RDY on the FR-HC2 to a terminal where the X10 signal or MRS signal is assigned on the inverter. Always connect terminal SE on the FR-HC2 to terminal SD on the inverter. Not connecting these terminals may damage the FR-CV.

日本代理商 瞻富 > 神隆 加工世泰商貿
電話： 037-466333
Email: service@repairtw.com
Line Id: @2222
www.repairtw.com

NOTE

- The voltage phases of terminals R/L11, S/L21, and T/MC1 and the voltage phases of terminals R2/L1, S2/L2, and T2/L3 must be matched.
- Use the sink logic when the FR-CV is connected. It cannot be connected when the source logic is selected.
- Do not connect a DC reactor (FR-HEL) to the inverter when the FR-CV is connected.

2.8.6 Connection of the power regeneration converter (MT-RC)

When connecting the power regeneration converter (MT-RC), perform wiring securely as follows. Incorrect connection will damage the power regeneration converter and the inverter. The MT-RC is compatible with FR-F840-01800(75K) or higher. After making sure that the wiring is correct and secure, set "1" in **Pr.30 Regenerative function selection**.

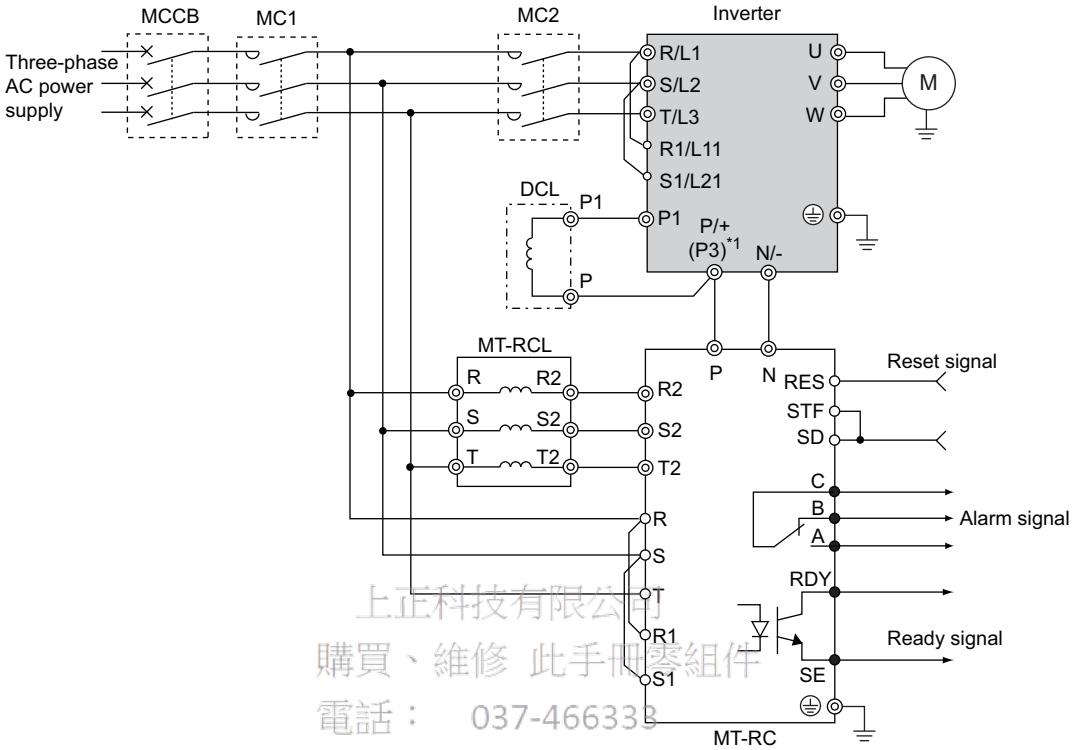

*1 Terminal P3 is equipped in the FR-F820-00770(18.5K) to 01250(30K) and the FR-F840-00470(22K) to 01800(75K). When connecting multiple inverters in parallel, always use either terminal P/+ or P3 for the connection. (Do not use terminals P/+ and P3 together.)

上正科技有限公司
購買、維修 此手冊零組件
電話： 037-466333
Email: service@repairtw.com
Line id: @zzzz
www.repairtw.com

NOTE

- When using the inverter with the MT-RC, install a magnetic contactor (MC) at the input side of the inverter so that power is supplied to the inverter after one second or more has elapsed after powering ON the MT-RC. When power is supplied to the inverter prior to the MT-RC, the inverter and the MT-RC may be damaged or the MCCB may be shut off or damaged.

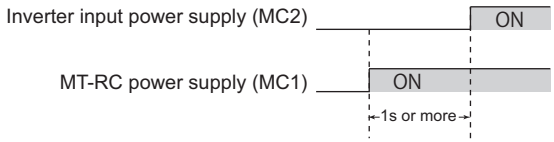

- When connecting the power coordination reactor and others, refer to Instruction Manual of the MT-RC for precautions.

2.8.7 Connection of the DC reactor (FR-HEL)

- Keep the surrounding air temperature within the permissible range (-10 to +50°C). Keep enough clearance around the reactor because it heats up. (Take 10 cm or more clearance on top and bottom and 5 cm or more on left and right regardless of the installation direction.)

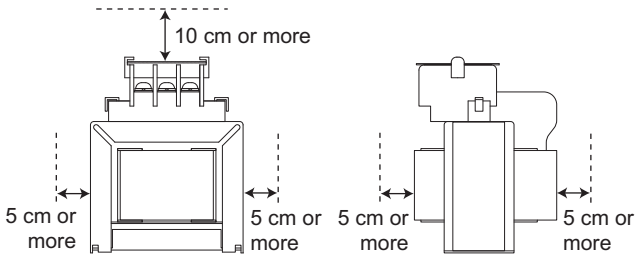

- When using the DC reactor (FR-HEL), connect it to terminals P/+ and P1.
  In this case, the jumper connected across terminals P/+ and P1 must be removed. Otherwise, the reactor will not be effective. (The jumper is not installed for the FR-F820-03160(75K) or higher and the FR-F840-01800(75K) or higher.)

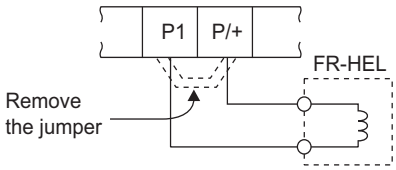

- Select a DC reactor according to the applied motor capacity (refer to page 612). For the FR-F820-03160(75K) or higher, the FR-F840-01800(75K) or higher, and when a 75 kW or higher motor is used, always connect a DC reactor.
- Since the DC reactor (FR-HEL) is electrically connected to the enclosure through mounting screws, the DC reactor is earthed (grounded) by being securely mounted to the enclosure. However, if the DC reactor is not earthed (grounded) securely enough, an earthing (grounding) cable may be used.
  When using an earthing (grounding) cable for the FR-HEL-(H)55K or lower, wire the cable to the installation hole where varnish is removed. (Refer to the Instruction Manual of the FR-HEL.)
  For the FR-HEL-(H)75K or higher, use an earth (ground) terminal to perform earthing (grounding). (Refer to the Instruction Manual of the FR-HEL.)

NOTE

- The wiring distance must be within 5 m.
- As a reference, the cable gauge for the connection must be equal to or larger than that of the power cables (R/L1, S/L2, T/L3) and the earthing (grounding) cable. (Refer to page 50.)

上正科技有限公司
購買、維修 此手冊零組件
電話： 037-466333
Email: service@repairtw.com
Line id: @zzzz
www.repairtw.com

CHAPTER 3 PRECAUTIONS FOR USE OF THE INVERTER

3.1 Electro-magnetic interference (EMI) and leakage currents 84
3.2 Power supply harmonics....91
3.3 Installation of a reactor 95
3.4 Power shutdown and magnetic contactor (MC)....96
3.5 Countermeasures against deterioration of the 400 V class motor insulation....98
3.6 Checklist before starting operation 99
3.7 Failsafe system which uses the inverter 102

上正科技有限公司
購買、維修 此手冊零組件
電話： 037-466333
Email: service@repairtw.com
Line id: @zzzz
www.repairtw.com

3 PRECAUTIONS FOR USE OF THE INVERTER

This chapter explains the precautions for use of this product.
Always read the instructions before use.
For the separated converter type, refer to the "PRECAUTIONS FOR USE OF THE INVERTER" in the FR-F802 (Separated Converter Type) Instruction Manual (Hardware).
For the IP55 compatible model, refer to the "PRECAUTIONS FOR USE OF THE INVERTER" in the FR-F806 (IP55/UL Type 12 specification) Instruction Manual (Hardware).

3.1 Electro-magnetic interference (EMI) and leakage currents

3.1.1 Leakage currents and countermeasures

Capacitances exist between the inverter I/O cables, other cables and earth and in the motor, through which a leakage current flows. Since its value depends on the static capacitances, carrier frequency, etc., low acoustic noise operation at the increased carrier frequency of the inverter will increase the leakage current. Therefore, take the following countermeasures. Select the earth leakage current breaker according to its rated sensitivity current, independently of the carrier frequency setting.

◆ To-earth (ground) leakage currents

上正科技有限公司
購買、維修、此手冊零組件
電話： 037-466333
Email: service@repairtw.com
Line Id: @2222
www.repairtw.com

Leakage currents may flow not only into the inverter's own line but also into the other lines through the earthing (grounding) cable, etc. These leakage currents may operate earth leakage circuit breakers and earth leakage relays unnecessarily.

■ Countermeasures

- If the carrier frequency setting is high, decrease the **Pr.72 PWM frequency selection** setting.
  Note that motor noise increases. Selecting **Pr.240 Soft-PWM operation selection** makes the sound inoffensive.
- By using earth leakage circuit breakers designed for harmonic and surge suppression in the inverter's own line and other line, operation can be performed with the carrier frequency kept high (with low noise).

NOTE

- Long wiring will increase the leakage current.
- High motor capacity will increase the leakage current. The leakage current of the 400 V class is larger than that of the 200 V class.

◆ Line-to-line leakage currents

Harmonics of leakage currents flowing in static capacitances between the inverter output cables may operate the external thermal relay unnecessarily. When the wiring length is long (50 m or more) for the 400 V class small-capacity models (FR-F840-00170(7.5K) or lower), the external thermal relay is likely to operate unnecessarily because the ratio of the leakage current to the rated motor current increases.

■ Line-to-line leakage current example (200 V class)

Motor capacity (kW)	Rated motor current (A)	Leakage current (mA)*1		Condition
		Wiring length 50 m	Wiring length 100 m	
0.4	1.8	310	500	• Motor: SF-JR 4P • Carrier frequency: 14.5 kHz • Cable: 2 mm^2, 4 cores • Cabtyre cable
0.75	3.2	340	530	
1.5	5.8	370	560	
2.2	8.1	400	590	
3.7	12.8	440	630	
5.5	19.4	490	680	
7.5	25.6	535	725	

*1 The leakage currents of the 400 V class are about twice as large.

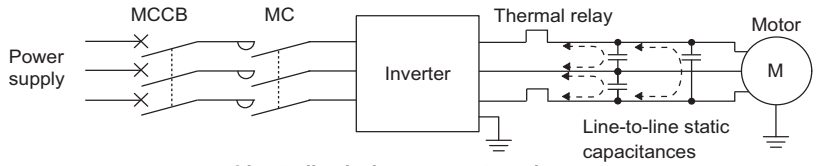

Line-to-line leakage currents path

■ Countermeasures

- Use **Pr.9 Electronic thermal O/L relay**.
- If the carrier frequency setting is high, decrease the **Pr.72 PWM frequency selection** setting.
  Note that motor noise increases. Selecting **Pr.240 Soft-PWM operation selection** makes the sound inoffensive.
  To ensure that the motor is protected against line-to-line leakage currents, it is recommended to use a temperature sensor to directly detect motor temperature.

■ Installation and selection of the molded case circuit breaker

Install a molded case circuit breaker (MCCB) on the power receiving side to protect the wiring at the inverter input side. Select an MCCB according to the inverter input side power factor, which depends on the power supply voltage, output frequency and load. Especially for a completely electromagnetic MCCB, a slightly large capacity must be selected since its operation characteristic varies with harmonic currents. (Check it in the data of the corresponding breaker.) As an earth leakage current breaker, use the Mitsubishi earth leakage current breaker designed for harmonics and surge suppression.

◆ Selecting the rated sensitivity current for the earth leakage circuit breaker

To install the earth leakage circuit breaker on the inverter circuit, select its rated sensitivity current as follows, independently of the PWM carrier frequency.

- Breaker designed for harmonic and surge suppression
  Rated sensitivity current
  IΔn ≥ 10 × (Ig1 + Ign + Igi + Ig2 + Igm)
- Standard breaker
  Rated sensitivity current
  IΔn ≥ 10 × {Ig1 + Ign + Igi + 3 × (Ig2 + Igm)}

Ig1, Ig2: Leakage currents in wire path during commercial power supply operation
Ign: Leakage current from noise filters on the input side of the inverter
Igm: Leakage current from the motor during commercial power supply operation
Igi: Leakage current of inverter unit

上正科技有限公司
購買、維修 此手冊零組件
電話： 037-466333
Email: service@repairtw.com
Line id: @zzzz
www.repairtw.com

Example of leakage current of cable path per 1km during the commercial power supply operation when the CV cable is routed in metal conduit (200 V 60 Hz)

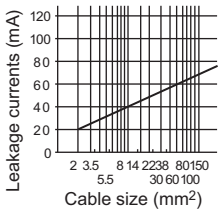

Leakage current example of three-phase induction motor during the commercial power supply operation (200 V 60 Hz)

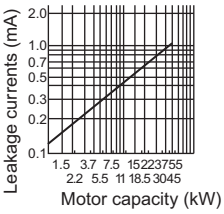

Example of leakage current per 1km during the commercial power supply operation when the CV cable is routed in metal conduit (Three-phase three-wire delta connection 400 V 60 Hz)

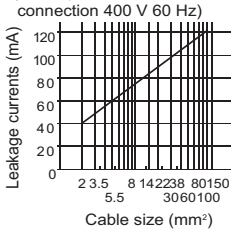

Leakage current example of three-phase induction motor during the commercial power supply operation (Totally-enclosed fan-cooled type motor 400 V 60 Hz)

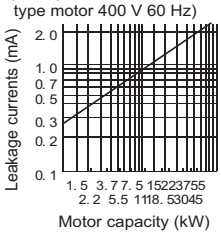

For "⅄" connection, the amount of leakage current is appox.1/3 of the above value.

Example

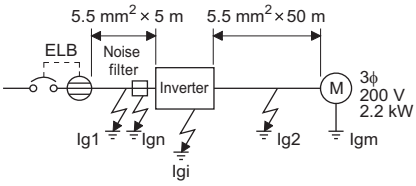

Item	Breaker designed for harmonic and surge suppression	Standard breaker
Leakage current Ig1 (mA)	$33 \times \frac{5m}{1000m} = 0.17$	
Leakage current Ign (mA)	0 (without noise filter)	
Leakage current Igi (mA)	1 (without EMC filter). For the leakage current of the inverter, refer to the following table.	
Leakage current Ig2 (mA)	$33 \times \frac{50m}{1000m} = 1.65$	
Motor leakage current Igm (mA)	0.18	
Total leakage current (mA)	3.00	6.66
Rated sensitivity current (mA) (≥ Ig × 10)	30	100

Inverter leakage current (with and without EMC filter)

	Voltage (V)	EMC filter		Remarks
		ON (mA)	OFF (mA)	
Phase earthing (grounding)	200	22	1	Input power conditions 220 V/60 Hz (200 V class) or 440 V/60 Hz (400 V class), within 3% of power supply unbalance
	400	35	2	
Earthed-neutral system 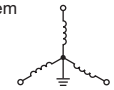	400	2	1	

上正科技有限公司
購買、維修 此手冊零組件
電話: 02-27455889
Email: service@repairtw.com
Line id: @zzzz
www.repairtw.com

NOTE

- Install the earth leakage circuit breaker (ELB) on the input side of the inverter.
- In the ⅄ connection earthed-neutral system, the sensitivity current is blunt against a ground fault in the inverter output side. Earthing (Grounding) must conform to the requirements of national and local safety regulations and electrical codes. (NEC section 250, IEC 61140 class 1 and other applicable standards)
- When the breaker is installed on the output side of the inverter, it may be unnecessarily operated by harmonics even if the effective value is within the rating.
  In this case, do not install the breaker since the eddy current and hysteresis loss will increase, leading to temperature rise.
- The following models and products are standard breakers: the models BV-C1, BC-V, NVB, NV-L, NV-G2N, NV-G3NA, and NV-2F, the earth leakage circuit breakers with AA neutral wire open-phase protection, and the earth leakage relays (except NV-ZHA).
  The other series, models, and products are designed for harmonic and surge suppression: the NV-C series, NV-S series, MN series, the models NV30-FA, NV50-FA, NV-H, and BV-C2, earth leakage alarm breaker NF-Z, and the earth leakage relay NV-ZHA.

3.1.2 Techniques and measures for electromagnetic compatibility (EMC)

Some electromagnetic noises enter the inverter to cause the inverter malfunction, and others are radiated by the inverter to cause the peripheral devices to malfunction. (The former is called EMS problem, the latter is called EMI problem, and both is called EMC problem.) Though the inverter is designed to be immune to noises, it requires the following basic measures and EMS measures as it handles low-level signals. Pay attention to the electromagnetic noises that could be generated by the inverter since the inverter chops outputs at high carrier frequency. If these electromagnetic noises cause peripheral devices to malfunction, EMI countermeasures should be taken to suppress noises. These techniques differ slightly depending on EMI paths.

◆ Basic measures

- Do not run the power cables (I/O cables) and signal cables of the inverter in parallel with each other and do not bundle them.

- Use shielded twisted pair cables for the detector connecting and control signal cables and connect the sheathes of the shielded cables to terminal SD.
- Ground (Earth) the inverter, motor, etc. at one point.

◆ EMS measures to reduce electromagnetic noises that enter the inverter and cause it to malfunction

When devices that generate many electromagnetic noises (which use magnetic contactors, electromagnetic brakes, many relays, for example) are installed near the inverter and the inverter may malfunction due to electromagnetic noises, the following countermeasures must be taken:

- Provide surge suppressors for devices that generate many electromagnetic noises to suppress electromagnetic noises.
- Install data line filters to signal cables (refer to page 88).
- Ground (Earth) the shields of the detector connection and control signal cables with cable clamp metal.

◆ EMI measures to reduce electromagnetic noises that are radiated by the inverter to cause the peripheral devices to malfunction

Inverter-generated noises are largely classified into those radiated by the inverter itself and by the I/O cables connected to its main circuit, those electromagnetically and electrostatically induced to the signal cables of the peripheral devices close to the power cable connected to the inverter main circuit, and those transmitted through the power cables.

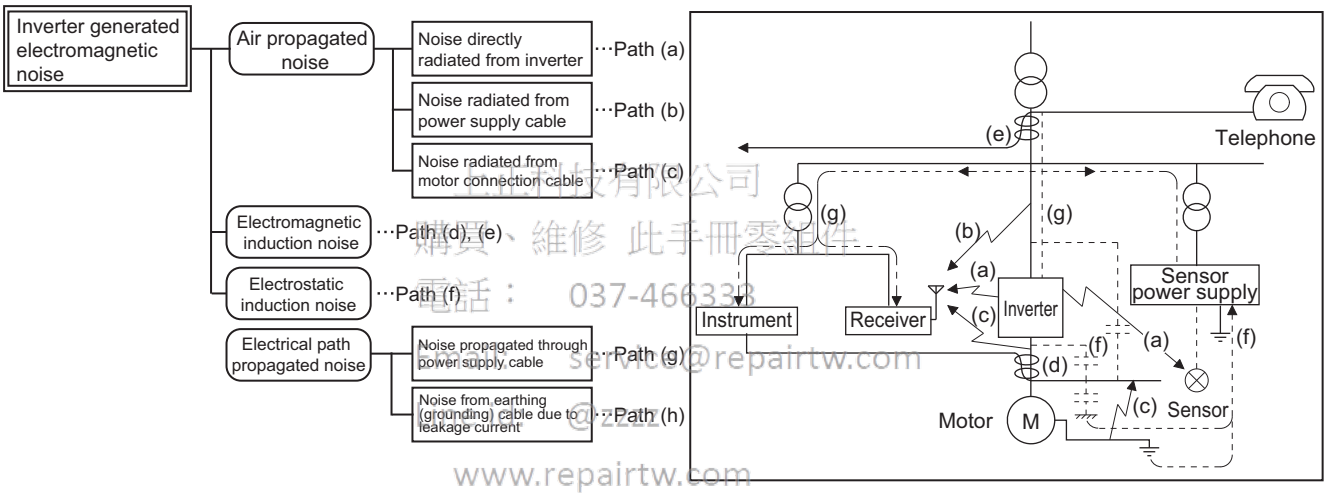

上正科技有限公司
購買、維修 此手冊零組件
電話： 037-466338
service@repairtw.com
@2022
www.repairtw.com

Noise propagation path	Countermeasure
(a), (b), (c)	When devices that handle low-level signals and are liable to malfunction due to electromagnetic noises, e.g. instruments, receivers and sensors, are contained in the enclosure that contains the inverter or when their signal cables are run near the inverter, the devices may malfunction due to by air-propagated electromagnetic noises. The following countermeasures must be taken: • Install easily affected devices as far away as possible from the inverter. • Run easily affected signal cables as far away as possible from the inverter and its I/O cables. • Do not run the signal cables and power cables (inverter I/O cables) in parallel with each other and do not bundle them. • Set the EMC filter ON/OFF connector of the inverter to the ON position. (Refer to page 88.) • Inserting a line noise filter into the output suppresses the radiated noise from the cables. • Use shielded cables as signal cables and power cables and run them in individual metal conduits to produce further effects.
(d), (e), (f)	When the signal cables are run in parallel with or bundled with the power cables, magnetic and static induction noises may be propagated to the signal cables to cause malfunction of the devices and the following countermeasures must be taken: • Install easily affected devices as far away as possible from the inverter. • Run easily affected signal cables as far away as possible from the inverter and its I/O cables. • Do not run the signal cables and power cables (inverter I/O cables) in parallel with each other and do not bundle them. • Use shielded cables as signal cables and power cables and run them in individual metal conduits to produce further effects.

Noise propagation path	Countermeasure
(g)	When the power supplies of the peripheral devices are connected to the power supply of the inverter in the same line, inverter-generated noises may flow back through the power supply cables to cause malfunction of the devices and the following countermeasures must be taken: • Set the EMC filter ON/OFF connector of the inverter to the ON position. (Refer to page 88.) • Install the line noise filter (FR-BLF/FR-BSF01) to the power cables (output cables) of the inverter.
(h)	When a closed loop circuit is formed by connecting the peripheral device wiring to the inverter, leakage currents may flow through the earthing (grounding) cable of the inverter to cause the device to malfunction. In that case, disconnecting the earthing (grounding) cable from the device may stop the malfunction of the device.

■ Data line filter

Data line filter is effective as an EMI countermeasure. Provide a data line filter for the detector cable, etc.

- Commercially available data line filter: ZCAT3035-1330 (by TDK), ESD-SR-250 (by NEC TOKIN)
- Specification example (ZCAT3035-1330 by TDK)

Item	Description	
Impedance (Ω)	10 to 100 MHz	80
	100 to 500 MHz	150
Outline dimension drawings (mm)	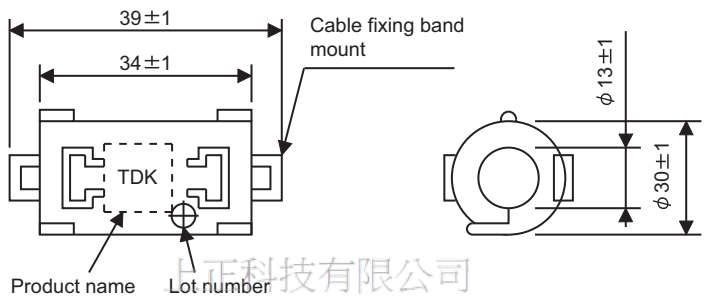	

日正科技有限公司
購買、維修 此手冊零組件
電話： 037-466333
Email: service@repairtw.com
Line id: @zzzz
www.repairtw.com

The impedance values above are reference values, and not guaranteed values.

■ EMI measure example

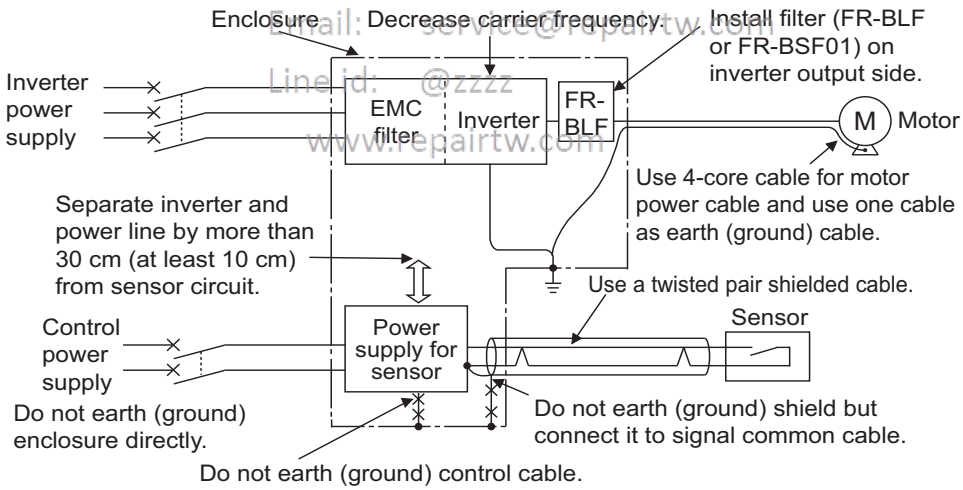

NOTE

- For compliance with the EU EMC Directive, refer to the Instruction Manual (Startup).

3.1.3 Built-in EMC filter

This inverter is equipped with a built-in EMC filter (capacitive filter) and a common mode choke.

These are effective in reducing air-propagated noise on the input side of the inverter.

To enable the EMC filter, set the EMC filter ON/OFF connector to the ON position. The FM type is initially set to "disabled" (OFF), and the CA type to "enabled" (ON).

The input side common mode choke, which is built in the FR-F820-02330(55K) or lower and the FR-F840-01160(55K) or lower inverter, is always enabled regardless of the EMC filter ON/OFF connector setting.

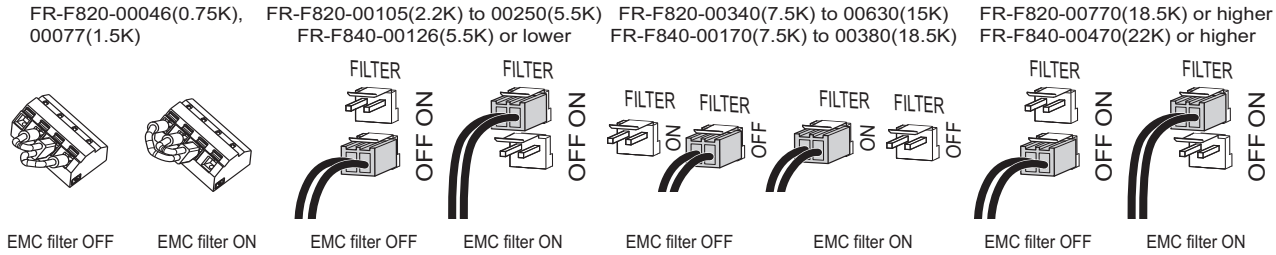

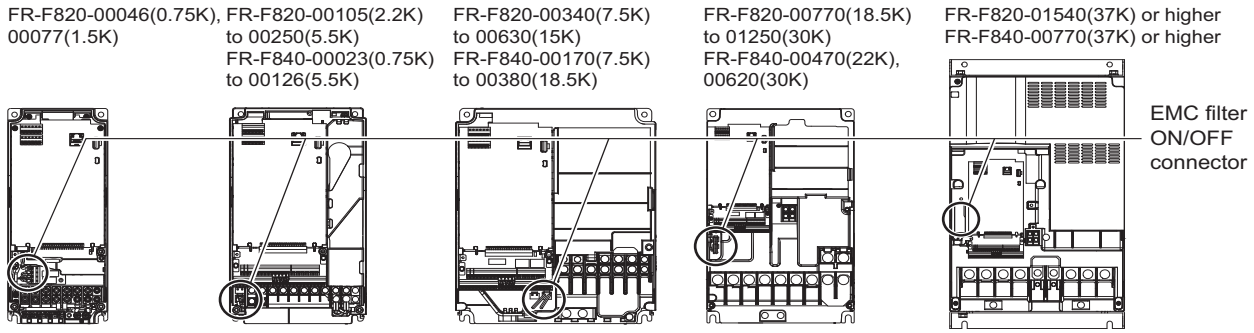

◆ How to enable or disable the filter

■ For FR-F820-00105(2.2K) or higher and FR-F840-00023(0.75K) or higher

- Before removing a front cover, check to make sure that the indication of the inverter operation panel is OFF, wait for at least 10 minutes after the power supply has been switched OFF, and check that there is no residual voltage using a tester or the like.
- When disconnecting the connector, push the fixing tab and pull the connector straight without pulling the cable or forcibly pulling the connector with the tab fixed.
  When installing the connector, also engage the fixing tab securely.
  (If it is difficult to disconnect the connector, use a pair of needle-nose pliers, etc.)

上正科技有限公司
購買、維修此手冊零組件
電話： 037-466333
Email: service@repairtw.com
Line id: @225
www.repairtw.com

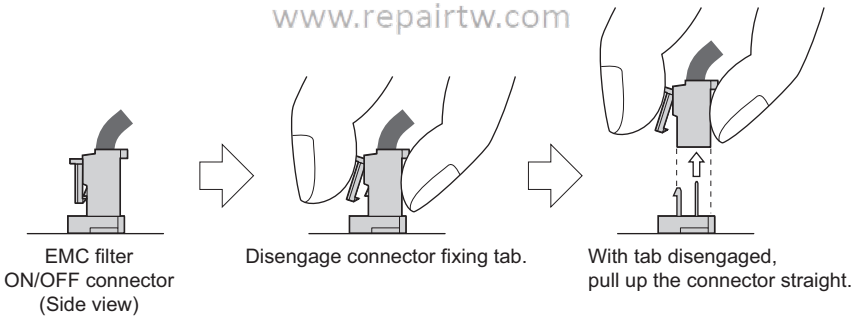

■ For FR-F820-00077(1.5K) or lower

- Before removing a front cover, check to make sure that the indication of the inverter operation panel is OFF, wait for at least 10 minutes after the power supply has been switched OFF, and check that there is no residual voltage using a tester or the like.
- Remove the control circuit terminal block. (Refer to page 605.)
- Connect the shorting wire to the corresponding terminal to enable or disable the filter. Connect the wire to the terminal in the same way as general wiring of the control circuit terminal block. (Refer to page 63.)
- After switching, reinstall the control circuit terminal block as it was.

NOTE

- Fit the connector or shorting wire to either ON or OFF position.
- Enabling (turning ON) the EMC filter increases leakage current. (Refer to page 85.)

⚠WARNING
• While power is ON or when the inverter is running, do not open the front cover. Otherwise you may get an electric shock.

上正科技有限公司
購買、維修 此手冊零組件
電話： 037-466333
Email: service@repairtw.com
Line id: @zzzz
www.repairtw.com

3.2 Power supply harmonics

3.2.1 Power supply harmonics

The inverter may generate power supply harmonics from its converter circuit to affect the power generator, power factor correction capacitor etc. Power supply harmonics are different from noise and leakage currents in source, frequency band and transmission path. Take the following countermeasure suppression techniques.

- Differences between harmonics and noises

Item	Harmonics	Noise
frequency	Normally 40th to 50th degrees or less (3 kHz or less).	High frequency (several 10 kHz to 1 GHz order).
Location	To-electric channel, power impedance.	To-space, distance, wiring path.
Quantitative understanding	Theoretical calculation possible.	Random occurrence, quantitative grasping difficult.
Generated amount	Nearly proportional to the load capacity.	Changes with the current variation ratio. (Gets larger as switching speed increases.)
Affected equipment immunity	Specified by standards per equipment.	Different depending on maker's equipment specifications.
Countermeasure	Provide a reactor.	Increase distance.

- Countermeasures

  The harmonic current generated from the inverter to the input side differs according to various conditions such as the wiring impedance, whether a reactor is used or not, and output frequency and output current on the load side.

  For the output frequency and output current, we understand that this should be calculated in the conditions under the rated load at the maximum operating frequency.

上正科技有限公司
購買、維修 此手冊零組件
電話： 037-466333
Email: service@repairtw.com
Line: @zzzz
www.repairtw.com

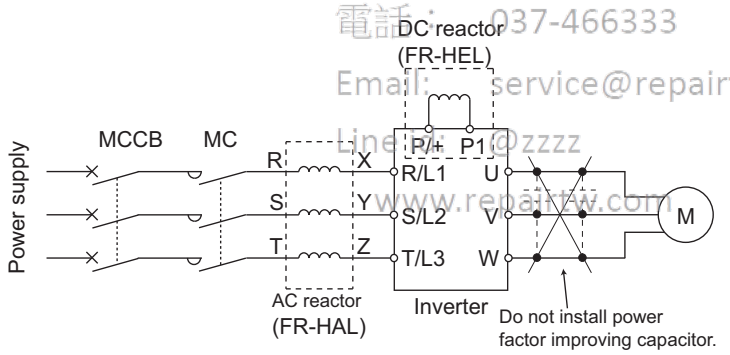

NOTE

- The power factor improving capacitor and surge suppressor on the inverter output side may be overheated or damaged by the harmonic components of the inverter output. Also, since an excessive current flows in the inverter to activate overcurrent protection, do not provide a capacitor and surge suppressor on the inverter output side when the motor is driven by the inverter. For power factor improvement, install a reactor on the inverter input side or in the DC circuit.

3.2.2 Harmonic suppression guidelines in Japan

Inverters have a converter section (rectifier circuit) and generate a harmonic current.

Harmonic currents flow from the inverter to a power receiving point via a power transformer. The Harmonic Suppression Guidelines was established to protect other consumers from these outgoing harmonic currents.

The three-phase 200 V input specifications 3.7 kW or lower were previously covered by "the Harmonic Suppression Guidelines for Household Appliances and General-purpose Products" and other models were covered by "the Harmonic Suppression Guidelines for Consumers Who Receive High Voltage or Special High Voltage". However, the transistorized inverter has been excluded from the target products covered by "the Harmonic Suppression Guidelines for Household Appliances and General-purpose Products" in January 2004 and "the Harmonic Suppression Guideline for Household Appliances and General-purpose Products" was repealed on September 6, 2004.

All capacity and all models of general-purpose inverter used by specific consumers are now covered by "the Harmonic Suppression Guidelines for Consumers Who Receive High Voltage or Special High Voltage" (hereinafter referred to as "the Specific Consumer Guidelines").

- "Specific Consumer Guidelines"
  This guideline sets forth the maximum harmonic currents outgoing from a high-voltage or especially high-voltage receiving consumer who will install, add or renew harmonic generating equipment. If any of the maximum values is exceeded, this guideline requires that consumer to take certain suppression measures.
- Maximum values of outgoing harmonic currents per 1 kW contract power

Received power voltage	5th	7th	11th	13th	17th	19th	23rd	Over 23rd
6.6 kV	3.5	2.5	1.6	1.3	1.0	0.9	0.76	0.70
22 kV	1.8	1.3	0.82	0.69	0.53	0.47	0.39	0.36
33 kV	1.2	0.86	0.55	0.46	0.35	0.32	0.26	0.24

◆ Application of the specific consumer guidelines

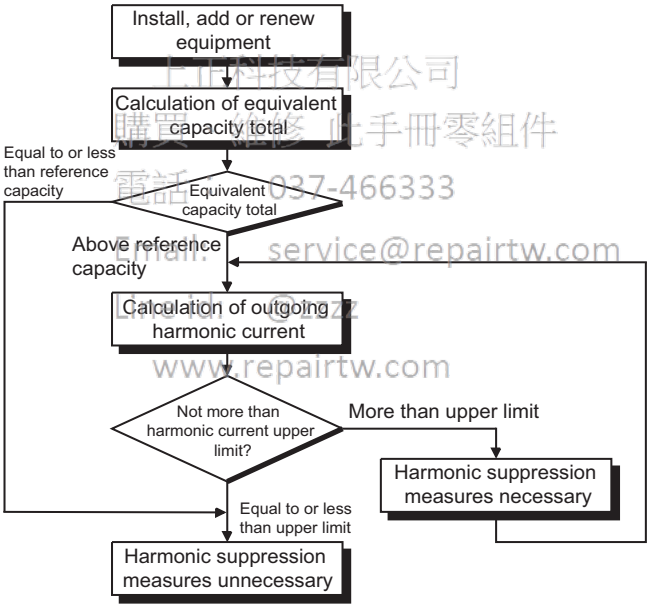

上市科技有限公司
購買 維修 此手冊零組件
電話: 037-466333
Email: service@repairtw.com
Line id: @zzz
www.repairtw.com

■ Conversion factor

Classification	Circuit type		Conversion factor Ki
3	Three-phase bridge (capacitor smoothing)	Without reactor	K31 = 3.4
		With reactor (AC side)	K32 = 1.8
		With reactor (DC side)	K33 = 1.8
		With reactors (AC, DC sides)	K34 = 1.4
5	Self-excitation three-phase bridge	When a high power factor converter is used	K5 = 0

■ Equivalent capacity limit

Received power voltage	Reference capacity
6.6 kV	50 kVA
22/33 kV	300 kVA
66 kV or more	2000 kVA

■ Harmonic content (when the fundamental current is considered as 100%)

Reactor	5th	7th	11th	13th	17th	19th	23rd	25th
Not used	65	41	8.5	7.7	4.3	3.1	2.6	1.8
Used (AC side)	38	14.5	7.4	3.4	3.2	1.9	1.7	1.3
Used (DC side)	30	13	8.4	5.0	4.7	3.2	3.0	2.2
Used (AC, DC sides)	28	9.1	7.2	4.1	3.2	2.4	1.6	1.4

3

■ Calculation of equivalent capacity P0 of harmonic generating equipment

"Equivalent capacity" is the capacity of a 6-pulse converter converted from the capacity of consumer's harmonic generating equipment and is calculated by the following equation. If the sum of equivalent capacities is higher than the limit (refer to the list of the equivalent capacity limits), harmonics must be calculated by the equation in next subheading.

P0 = Σ (Ki × Pi) [kVA]

Ki: Conversion factor (Refer to the list of the conversion factors.)

Pi: Rated capacity of harmonic generating equipment*1 [kVA]

i: Number indicating the conversion circuit type

*1 Rated capacity: Determined by the capacity of the applied motor and found in the table "Rated capacities and outgoing harmonic currents of inverter-driven motors". The rated capacity used here is used to calculate the generated harmonic amount and is different from the power supply capacity required for actual inverter drive.

■ Calculation of outgoing harmonic current

Outgoing harmonic current = fundamental wave current (value converted from received power voltage) × operation ratio × harmonic content

- Operation ratio: actual load factor × operation time ratio during 30 minutes
- Harmonic content: Refer to the list of the harmonic content.

上正科技有限公司
購買、維修 此手冊零組件
電話： 037-466333
Email service@repairtw.com
Line id: @zzz
www.repairtw.com

■ Rated capacities and outgoing harmonic currents of inverter-driven motors

Applicable motor (kW)	Fundamental wave current (A)		Fundamental wave current converted from 6.6 kV (mA)	Rated capacity (kVA)	Outgoing harmonic current converted from 6.6 kV (mA) (No reactor, 100% operation ratio)							
	200 V	400 V			5th	7th	11th	13th	17th	19th	23rd	25th
0.4	1.61	0.81	49	0.57	31.85	20.09	4.165	3.773	2.107	1.519	1.274	0.882
0.75	2.74	1.37	83	0.97	53.95	34.03	7.055	6.391	3.569	2.573	2.158	1.494
1.5	5.50	2.75	167	1.95	108.6	68.47	14.20	12.86	7.181	5.177	4.342	3.006
2.2	7.93	3.96	240	2.81	156.0	98.40	20.40	18.48	10.32	7.440	6.240	4.320
3.7	13.0	6.50	394	4.61	257.1	161.5	33.49	30.34	16.94	12.21	10.24	7.092
5.5	19.1	9.55	579	6.77	376.1	237.4	49.22	44.58	24.90	17.95	15.05	10.42
7.5	25.6	12.8	776	9.07	504.4	318.2	65.96	59.75	33.37	24.06	20.18	13.97
11	36.9	18.5	1121	13.1	728.7	459.6	95.29	86.32	48.20	34.75	29.15	20.18
15	49.8	24.9	1509	17.6	980.9	618.7	128.3	116.2	64.89	46.78	39.24	27.16
18.5	61.4	30.7	1860	21.8	1209	762.6	158.1	143.2	79.98	57.66	48.36	33.48
22	73.1	36.6	2220	25.9	1443	910.2	188.7	170.9	95.46	68.82	57.72	39.96
30	98.0	49.0	2970	34.7	1931	1218	252.5	228.7	127.7	92.07	77.22	53.46
37	121	60.4	3660	42.8	2379	1501	311.1	281.8	157.4	113.5	95.16	65.88
45	147	73.5	4450	52.1	2893	1825	378.3	342.7	191.4	138.0	115.7	80.10
55	180	89.9	5450	63.7	3543	2235	463.3	419.7	234.4	169.0	141.7	98.10

Applicable motor (kW)	Fundamental wave current (A)		Fundamental wave current converted from 6.6 kV (mA)	Rated capacity (kVA)	Outgoing harmonic current converted from 6.6 kV (mA) (with a DC reactor, 100% operation ratio)							
	200 V	400 V			5th	7th	11th	13th	17th	19th	23rd	25th
75	245	123	7455	87.2	2237	969	626	373	350	239	224	164
90	293	147	8909	104	2673	1158	748	445	419	285	267	196
110	357	179	10848	127	3254	1410	911	542	510	347	325	239
132	—	216	13091	153	3927	1702	1100	655	615	419	393	288
160	—	258	15636	183	4691	2033	1313	782	735	500	469	344
220	—	355	21515	252	6455	2797	1807	1076	1011	688	645	473
250	—	403	24424	286	7327	3175	2052	1221	1148	782	733	537
280	—	450	27273	319	8182	3545	2291	1364	1282	873	818	600
315	—	506	30667	359	9200	3987	2576	1533	1441	981	920	675
355	—	571	34606	405	10382	4499	2907	1730	1627	1107	1038	761
400	—	643	38970	456	11691	5066	3274	1949	1832	1247	1169	857
450	—	723	43818	512	13146	5696	3681	2191	2060	1402	1315	964
500	—	804	48727	570	14618	6335	4093	2436	2290	1559	1462	1072
560	—	900	54545	638	16364	7091	4582	2727	2564	1746	1636	1200
630	—	1013	61394	718	18418	7981	5157	3070	2886	1965	1842	1351

■ Determining if a countermeasure is required

A countermeasure for harmonics is required if the following condition is satisfied: outgoing harmonic current > maximum value per 1 kW contract power × contract power.

■ Harmonic suppression techniques

No.	Item	Description
1	Reactor (FR-HAL or FR-HEL)	Install an AC reactor (FR-HAL) on the AC side of the inverter or a DC reactor (FR-HEL) on its DC side, or install both to suppress outgoing harmonic currents.
2	High power factor converter (FR-HC2)	This converter trims the current waveform to be a sine waveform by switching the rectifier circuit (converter module) with transistors. Doing so suppresses the generated harmonic amount significantly. Connect it to the DC area of an inverter. Use the high power factor converter (FR-HC2) with the accessories that come as standard.
3	Power factor improving capacitor	When used with a reactor connected in series, the power factor improving correction capacitor can absorb harmonic currents.
4	Transformer multi-phase operation	Use two transformers with a phase angle difference of 30° in combinations of 人 to Δ and Δ to Δ, to provide an effect corresponding to 12 pulses, reducing low-degree harmonic currents.
5	Passive filter (AC filter)	A capacitor and a reactor are used together to reduce impedances at specific frequencies. Harmonic currents are expected to be absorbed greatly by using this technique.
6	Active filter	This filter detects the current in a circuit generating a harmonic current and generates a harmonic current equivalent to a difference between that current and a fundamental wave current to suppress the harmonic current at the detection point. Harmonic currents are expected to be absorbed greatly by using this technique.

上達科技有限公司
購買、維修、出租工業設備
電話：937466333
Email: service@repairtw.com
Line id: @ta2
www.repairtw.com

3.3 Installation of a reactor

When the inverter is connected near a large-capacity power transformer (1000 kVA or more) or when a power factor correction capacitor is to be switched over, an excessive peak current may flow in the power input circuit, damaging the converter circuit. To prevent this, always install an AC reactor (FR-HAL), which is available as an option.

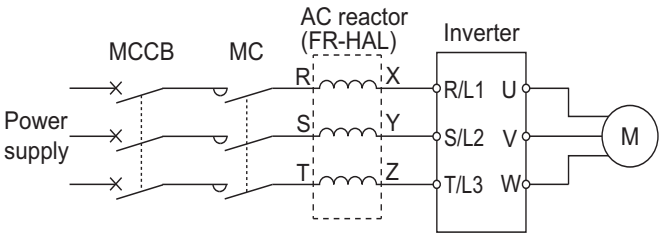

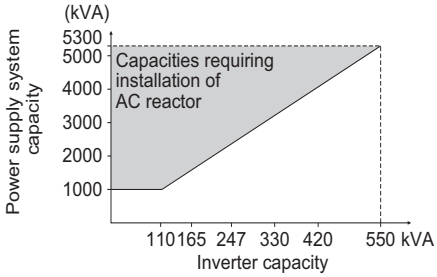

上正科技有限公司
購買、維修 此手冊零組件
電話： 037-466333
Email: service@repairtw.com
Line id: @zzzz
www.repairtw.com

3.4 Power shutdown and magnetic contactor (MC)

◆ Inverter input side magnetic contactor (MC)

On the inverter input side, it is recommended to provide an MC for the following purposes.
(Refer to page 26 for selection.)

- To disconnect the inverter from the power supply at activation of a protective function or at malfunctioning of the driving system (emergency stop, etc.).
- To prevent any accident due to an automatic restart at power restoration after an inverter stop made by a power failure.
- To separate the inverter from the power supply to ensure safe maintenance and inspection work.

To use an MC to perform an emergency stop during operation, select the MC conforming to JEM 1038-AC-3 rated current for the inverter rated input current.

NOTE

- Since repeated inrush currents at power ON will shorten the life of the converter circuit (switching life is about 1,000,000 times), frequent starts and stops of the magnetic contactor must be avoided. Turn ON or OFF the start (STF/STR) signal for the inverter start control to run or stop the inverter.

- Inverter start/stop circuit example
  As shown in the following figure, always use the start signal (turn ON or OFF the STF/STR signal) to make a start or stop.

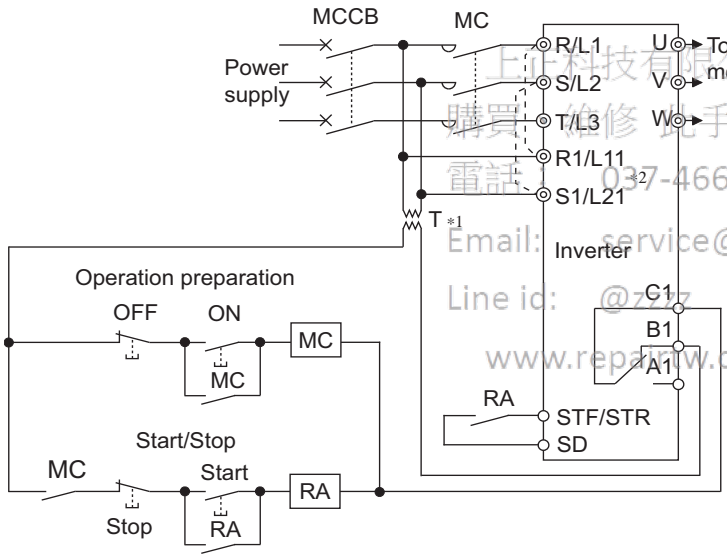

上正科技有限公司
購買 維修 地手冊零組件
電話: 037-466333
Email: service@repairtw.com
Line id: @zzz
www.repairtw.com

*1 When the power supply is 400 V class, install a stepdown transformer.
*2 To hold the Fault signal when the inverter's protective circuit is activated, connect the control circuit power supply terminals R1/L11 and S1/L21 to the input side of the MC . Before connection, remove jumpers across terminals R/L1 and R1/L11 and across terminals S/L2 and S1/L21. (Refer to page 66 for removal of the jumper.)

◆ Handling of the magnetic contactor on the inverter's output side

Switch the magnetic contactor between the inverter and motor only when both the inverter and motor are at a stop. When the magnetic contactor is turned ON while the inverter is operating, overcurrent protection of the inverter and such will activate. When the magnetic contactor is provided to switch to a commercial power supply, for example, it is recommended to use the electronic bypass function **Pr.135 to Pr.139** (refer to page 387). (Note that a PM motor cannot be driven by the commercial power supply.)

◆ Handling of the manual contactor on the inverter's output side

A PM motor is a synchronous motor with high-performance magnets embedded inside. High-voltage is generated at the motor terminals while the motor is running even after the inverter power is turned OFF. In an application where the PM motor is driven by the load even after the inverter is powered OFF, a low-voltage manual contactor must be connected at the inverter's output side.

NOTE

- Before wiring or inspection for a PM motor, confirm that the PM motor is stopped. In an application, such as fan and blower, where the motor is driven by the load, a low-voltage manual contactor must be connected at the inverter's output side, and wiring and inspection must be performed while the contactor is open. Otherwise you may get an electric shock.
- Do not open or close the contactor while the inverter is running (outputting).

上正科技有限公司
購買、維修 此手冊零組件
電話： 037-466333
Email: service@repairtw.com
Line id: @zzzz
www.repairtw.com

3.5 Countermeasures against deterioration of the 400 V class motor insulation

In the PWM type inverter, a surge voltage attributable to wiring constants is generated at the motor terminals. Especially in a 400 V class motor, the surge voltage may deteriorate the insulation. When the 400 V class motor is driven by the inverter, consider the following countermeasures:

◆ Countermeasures (with induction motor)

It is recommended to take one of the following countermeasures:

■ Rectifying the motor insulation and limiting the PWM carrier frequency according to the wiring length

For the 400 V class motor, use an insulation-enhanced motor.

Specifically,

- Order a "400 V class inverter-driven insulation-enhanced motor".
- For the dedicated motor such as the constant-torque motor and low-vibration motor, use an "inverter-driven dedicated motor".
- Set **Pr.72 PWM frequency selection** as indicated below according to the wiring length.

	Wiring length		
	Shorter than 50 m	**50 to 100 m**	**Longer than 100 m**
Pr.72 PWM frequency selection	15 (14.5 kHz) or lower	9 (9 kHz) or lower	4 (4 kHz) or lower

■ Suppressing the surge voltage on the inverter side

- For the FR-F840-01160(55K) or lower, connect the surge voltage suppression filter (FR-ASF-H/FR-BMF-H) to the inverter output side.
- For the FR-F840-01800(75K) or higher, connect the sine wave filter (MT-BSL/BSC) to the inverter output side.

上耀科技有限公司
購買、維修 此手冊零組件
電話: 037-652343
Email: service@repairtw.com
Line id: @zzzz
www.repairtw.com

◆ Countermeasures (with PM motor)

When the wiring length exceeds 50 m, set "9" (6 kHz) or less in **Pr.72 PWM frequency selection**.

NOTE

- For the details of **Pr.72 PWM frequency selection**, refer to page 207. (When using an optional sine wave filter (MT-BSL/BSC), set "25" (2.5 kHz) in **Pr.72**.)
- For the details of the surge voltage suppression filter (FR-ASF-H/FR-BMF-H) and the sine wave filter (MT-BSL/BSC), refer to the Instruction Manual of each option.
- A surge voltage suppression filter (FR-ASF-H/FR-BMF-H) can be used under V/F control and Advanced magnetic flux vector control.
  A sine wave filter (MT-BSL/BSC) can be used under V/F control. Do not use the filters under different control methods.

3.6 Checklist before starting operation

The FR-F800 series inverter is a highly reliable product, but incorrect peripheral circuit making or operation/handling method may shorten the product life or damage the product.
Before starting operation, always recheck the following points.

Checkpoint	Countermeasure	Refer to page	Check by user
Crimp terminals are insulated.	Use crimp terminals with insulation sleeves to wire the power supply and the motor.	—	
The wiring between the power supply (terminals R/L1, S/L2, T/L3) and the motor (terminals U, V, W) is correct.	Application of power to the output terminals (U, V, W) of the inverter will damage the inverter. Never perform such wiring.	48	
No wire offcuts are left from the time of wiring.	Wire offcuts can cause a fault, failure, or malfunction. Always keep the inverter clean. When drilling mounting holes in an enclosure etc., take caution not to allow chips and other foreign matter to enter the inverter.	—	
The main circuit cable gauge is correctly selected.	Use an appropriate cable gauge to suppress the voltage drop to 2% or less. If the wiring distance is long between the inverter and motor, a voltage drop in the main circuit will cause the motor torque to decrease especially during the output of a low frequency.	50	
The total wiring length is within the specified length.	Keep the total wiring length within the specified length. In long distance wiring, charging currents due to stray capacitance in the wiring may degrade the fast-response current limit operation or cause the equipment on the inverter's output side to malfunction. Pay attention to the total wiring length.	50	
Countermeasures are taken against EMI.	The input/output (main circuit) of the inverter includes high frequency components, which may interfere with the communication devices (such as AM radios) used near the inverter. In such case, enable the EMC filter (turn ON the EMC filter ON/OFF connector) to minimize interference.	88	
On the inverter's output side, there is no power factor correction capacitor, surge suppressor, or radio noise filter installed.	Doing so will shut off the inverter output or damage the capacitor or surge suppressor. If any of the above devices is connected, immediately remove it.	—	
When performing an inspection or rewiring on the product that has been energized, the operator has waited long enough after shutting off the power supply.	For a short time after the power-OFF, a high voltage remains in the smoothing capacitor, and it is dangerous. Before performing an inspection or rewiring, wait 10 minutes or longer after the power supply turns OFF, then confirm that the voltage across the main circuit terminals P/+ and N/- of the inverter is low enough using a tester, etc.	—	
The inverter's output side has no short circuit or ground fault occurring.	• A short circuit or ground fault on the inverter's output side may damage the inverter module. • Fully check the insulation resistance of the circuit prior to inverter operation since repeated short circuits caused by peripheral circuit inadequacy or an earth (ground) fault caused by wiring inadequacy or reduced motor insulation resistance may damage the inverter module. • Fully check the to-earth (ground) insulation and phase-to-phase insulation of the inverter's output side before power-ON. Especially for an old motor or use in hostile atmosphere, securely check the motor insulation resistance, etc.	—	
The circuit is not configured to use the inverter's input-side magnetic contactor to start/stop the inverter frequently.	Since repeated inrush currents at power ON will shorten the life of the converter circuit, frequent starts and stops of the magnetic contactor must be avoided. Turn ON or OFF the inverter's start (STF/STR) signal to run or stop the inverter.	96	
The voltage applied to the inverter I/O signal circuits is within the specifications.	Application of a voltage higher than the permissible voltage to the inverter I/O signal circuits or opposite polarity may damage the I/O devices. Especially check the wiring to prevent the speed setting potentiometer from being connected incorrectly to short circuit terminals 10E and 5.	58	

上正科技有限公司
電話： 037-466333
Email： service@ursepairtw.com
Line id： @xxx
www.repairtw.com

Checkpoint	Countermeasure	Refer to page	Check by user
When using the electronic bypass operation, electrical and mechanical interlocks are provided between the electronic bypass contactors MC1 and MC2.	When using a switching circuit as shown below, chattering due to misconfigured sequence or arc generated at switching may allow undesirable current to flow in and damage the inverter. Miswiring may also damage the inverter. (Note that a PM motor cannot be driven by the commercial power supply.) 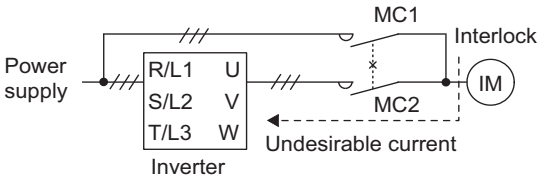 If switching to the commercial power supply operation while a failure such as an output short circuit has occurred between the magnetic contactor MC2 and the motor, the damage may further spread. If a failure has occurred between the MC2 and the motor, a protection circuit such as using the OH signal input must be provided.	—	
A countermeasure is provided for power restoration after a power failure.	If the machine must not be restarted when power is restored after a power failure, provide an MC on the inverter's input side and also make up a sequence which will not switch ON the start signal. If the start signal (start switch) remains ON after a power failure, the inverter will automatically restart as soon as the power is restored.	—	
A magnetic contactor (MC) is installed on the inverter's input side.	On the inverter's input side, connect an MC for the following purposes: • To disconnect the inverter from the power supply at activation of a protective function or at malfunctioning of the driving system (emergency stop, etc.). • To prevent any accident due to an automatic restart at power restoration after an inverter stop made by a power failure. • To separate the inverter from the power supply to ensure safe maintenance and inspection work. To use an MC to perform an emergency stop during operation, select the MC conforming to JEM 1038-AC-3 rated current for the inverter rated input current.	96	
The magnetic contactor on the inverter's output side is properly handled.	Switch the magnetic contactor between the inverter and motor only when both the inverter and motor are at a stop.	96	
When using a PM motor, a low-voltage manual contactor is installed on the inverter's output side.	A PM motor is a synchronous motor with high-performance magnets embedded inside. High-voltage is generated at the motor terminals while the motor is running even after the inverter power is turned OFF. In an application, such as fan and blower, where the motor is driven by the load, a low-voltage manual contactor must be connected on the inverter's output side, and wiring and inspection must be performed while the contactor is open. Otherwise you may get an electric shock.	96	
An EMI countermeasure is provided for the frequency setting signals.	If electromagnetic noise generated from the inverter causes the frequency setting signal to fluctuate and the motor rotation speed to be unstable when changing the motor speed with analog signals, the following countermeasures are effective: • Do not run the signal cables and power cables (inverter I/O cables) in parallel with each other and do not bundle them. • Run the signal cables as far away as possible from the power cables (inverter I/O cables). • Use shielded cables. • Install a ferrite core on the signal cable (Example: ZCAT3035-1330 TDK).	86	
A countermeasure is provided for an overload operation.	When performing frequent starts/stops by the inverter, rise/fall in the temperature of the transistor element of the inverter will repeat due to a repeated flow of large current, shortening the life from thermal fatigue. Since thermal fatigue is related to the amount of current, the life can be increased by reducing current at locked condition, starting current, etc. Reducing current may extend the service life but may also cause torque shortage, which leads to a start failure. Adding a margin to the current can eliminate such a condition. For an induction motor, use an inverter of a higher capacity (up to two ranks). For a PM motor, use an inverter and PM motor of higher capacities.	—	
The specifications and rating match the system requirements.	Make sure that the specifications and rating match the system requirements.	612	

上新科技有限公司
購買、維修 此手冊零組件
電話： 037-466333
Email: service@repairtw.com
Line id: @2222
www.repairtw.com

Checkpoint	Countermeasure	Refer to page	Check by user
Countermeasures are taken against electrical corrosion on the motor bearing.	When a motor is driven by the inverter, axial voltage is generated on the motor shaft, which may cause electrical corrosion of the bearing in rare cases depending on the wiring, load, operating conditions of the motor or specific inverter settings (high carrier frequency and EMC filter ON). Contact your sales representative to take appropriate countermeasures for the motor. The following shows examples of countermeasures for the inverter. • Decrease the carrier frequency. • Turn OFF the EMC filter. • Provide a common mode choke*1 on the output side of the inverter. (This is effective regardless of the EMC filter ON/OFF connector setting.)	—	

*1 Recommended common mode choke: FT-3KM F series FINEMET® common mode choke cores manufactured by Hitachi Metals, Ltd. FINEMET is a registered trademark of Hitachi Metals, Ltd.

上正科技有限公司
購買、維修 此手冊零組件
電話： 037-466333
Email: service@repairtw.com
Line id: @zzzz
www.repairtw.com

3.7 Failsafe system which uses the inverter

When a fault is detected by the protective function, the protective function activates and outputs the Fault signal. However, the Fault signal may not be output at an inverter's fault occurrence when the detection circuit or output circuit fails, etc. Although Mitsubishi assures the best quality products, provide an interlock which uses inverter status output signals to prevent accidents such as damage to the machine when the inverter fails for some reason. Also at the same time consider the system configuration where a failsafe from outside the inverter, without using the inverter, is enabled even if the inverter fails.

◆ Interlock method which uses the inverter status output signals

By combining the inverter output signals to provide an interlock as shown below, an inverter failure can be detected.

No.	Interlock method	Check method	Used signals	Refer to page
a	Inverter protective function operation	Operation check of an alarm contact. Circuit error detection by negative logic.	Fault (ALM) signal	319
b	Inverter operating status	Operation ready signal check.	Inverter operation ready (RY) signal	318
c	Inverter running status	Logic check of the start signal and running signal.	Start (STF or STR) signal Inverter running (RUN) signal	318, 359
d	Inverter running status	Logic check of the start signal and output current.	Start (STF or STR) signal Output current detection (Y12) signal	322, 359

- When using various signals, assign the functions to **Pr.190 to Pr.196 (Output terminal function selection)** referring to the table on the left.

Output signal	Pr.190 to Pr.196 setting	
	Positive logic	Negative logic
ALM	99	199
RY	11	111
RUN	0	100
Y12	12	112

上正科技有限公司
購買、維修 此手冊零組件
電話： 037-466333
Email: service@repairtw.com
Line Id: @2222
www.repairtw.com

NOTE

- Changing the terminal assignment using **Pr.190 to Pr.196 (Output terminal function selection)** may affect the other functions. Set parameters after confirming the function of each terminal.

■ Checking by using the Fault signal output from the inverter... (a)

When the inverter's protective function activates and the inverter output is stopped, the Fault (ALM) signal is output. (The ALM signal is assigned to terminal A1B1C1 in the initial setting). With this signal, check that the inverter operates properly. In addition, negative logic can be set. (ON when the inverter is normal, OFF when the fault occurs.)

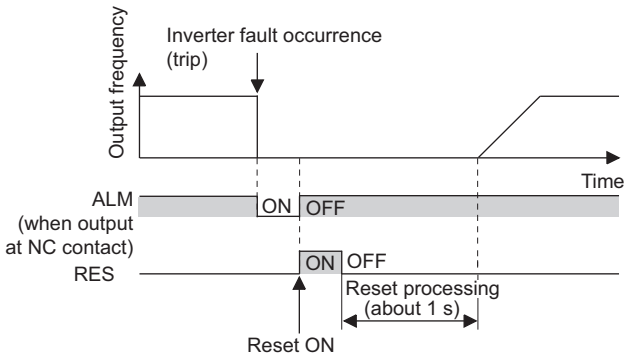

■ Checking the inverter operating status by using the Inverter operation ready signal output from the inverter ... (b)

The Inverter operation ready (RY) signal is output when the inverter power is ON and the inverter becomes operative. Check if the RY signal is output after powering ON the inverter.

■ Checking the inverter operating status by using the start signal input to the inverter and the Inverter running signal output from the inverter ... (c)

The Inverter running (RUN) signal is output when the inverter is running. (The RUN signal is assigned to terminal RUN in the initial setting.) Check if the RUN signal is output while a start signal (the STF/STR signal for forward/reverse rotation command) is input to the inverter. Even after the start signal is turned OFF, the RUN signal is kept output until the inverter makes the motor to decelerate and to stop. For the logic check, configure a sequence considering the inverter's deceleration time.

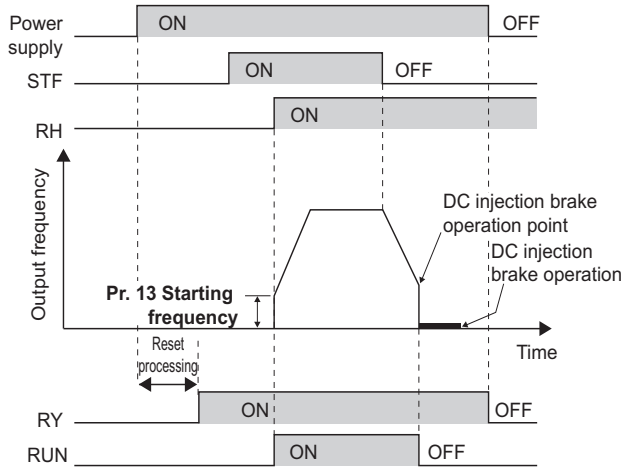

■ Checking the motor operating status by using the start signal input to the inverter and the Output current detection signal output from the inverter ... (d)

The Output current detection (Y12) signal is output when the inverter operates and currents flows into the motor.

Check if the Y12 signal is output while a start signal (the STF/STR signal for forward/reverse rotation command) is input to the inverter. The Y12 signal is initially set to be output at 120% (for FM type inverter) or 110% (for CA-type inverter) of the inverter rated current. Adjust the level to around 20% using no load current of the motor as reference with **Pr.150 Output current detection level**.

Like the Inverter running (RUN) signal, even after the start signal is turned OFF, the Y12 signal is kept output until the inverter stops the output to a decelerating motor. For the logic check, configure a sequence considering the inverter's deceleration time.

上揚科技有限公司
購買、維修、出售零組件
電話： 037-466333
Email: service@repairtw.com
Line id: @zzzz
www.repairtw.com

NOTE

- Changing the terminal assignment using **Pr.190 to Pr.196 (Output terminal function selection)** may affect the other functions. Set parameters after confirming the function of each terminal.

◆ Backup method which does not use the inverter

Even if the interlock is provided by the inverter status signal, enough failsafe is not ensured depending on the failure status of the inverter itself. For example, if an inverter CPU fails in a system interlocked with the inverter's Fault, start, and RUN signals, no Fault signals will be output and the RUN signal will be kept ON because the inverter CPU is down.

Provide a speed detector to detect the motor speed and current detector to detect the motor current, and consider the backup system such as performing a check as follows according to the level of importance of the system.

■ Start signal and actual operation check

Check the motor running and motor current while the start signal is input to the inverter by comparing the start signal to the inverter and detected speed of the speed detector or detected current of the current detector. Note that the current is flowing through the motor while the motor coasts to stop, even after the inverter's start signal is turned OFF. For the logic check, configure a sequence considering the inverter's deceleration time. In addition, it is recommended to check the three-phase current when using the current detector.

■ Command speed and actual operation check

Check for a gap between the actual speed and commanded speed by comparing the inverter's speed command and the speed detected by the speed detector.

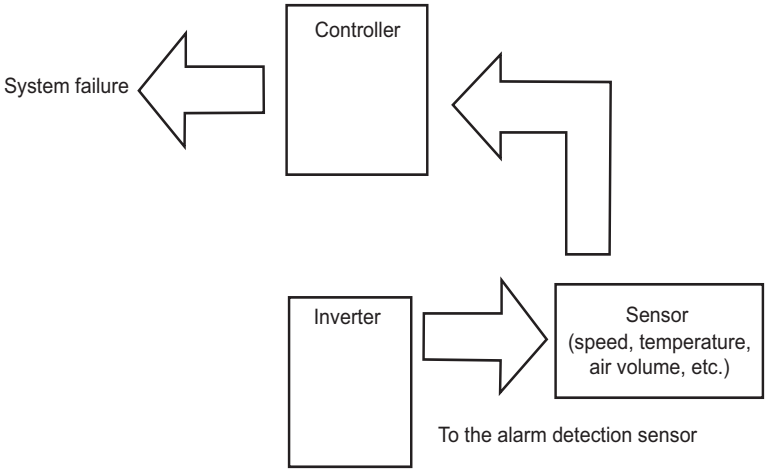

上正科技有限公司
購買、維修 此手冊零組件
電話： 037-466333
Email: service@repairtw.com
Line id: @zzzz
www.repairtw.com

CHAPTER 4 BASIC OPERATION

4.1 Operation panel (FR-DU08) 106
4.2 Monitoring the inverter 111
4.3 Easy setting of the inverter operation mode 112
4.4 Frequently-used parameters (simple mode parameters) 114
4.5 Basic operation procedure (PU operation) 116
4.6 Basic operation procedure (External operation) 122
4.7 Basic operation procedure (JOG operation) 129

上正科技有限公司
購買、維修 此手冊零組件
電話： 037-466333
Email: service@repairtw.com
Line id: @zzzz
www.repairtw.com

4 BASIC OPERATION

This chapter explains the basic operation of this product.
Always read the instructions before use.

4.1 Operation panel (FR-DU08)

4.1.1 Components of the operation panel (FR-DU08)

To mount the operation panel (FR-DU08) on the enclosure surface, refer to page 73.

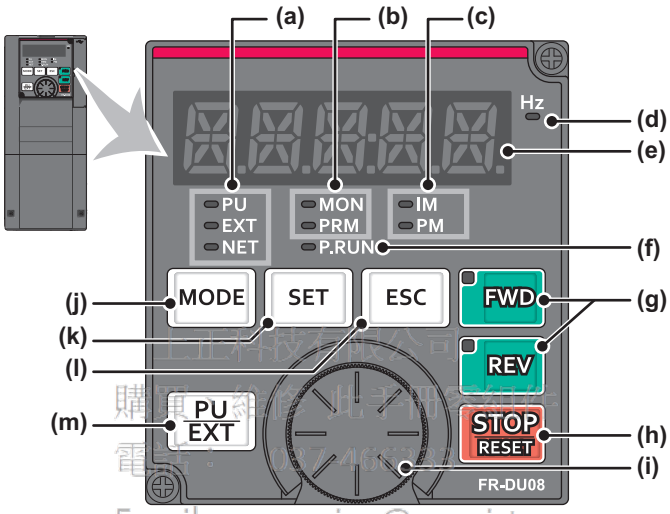

Email: service@repairtw.com
Line id: @zzzz
www.repairtw.com

No.	Appearance	Name	Description
(a)	PU EXT NET	Inverter operation mode LED indicator	PU: ON when the inverter is in the PU operation mode. EXT: ON when the inverter is in the External operation mode. (ON when the inverter in the initial setting is powered ON.) NET: ON when the inverter is in the Network operation mode. PU and EXT: ON when the inverter is in the External/PU combined operation mode 1 or 2.
(b)	MON PRM	Operation panel mode LED indicator	MON: ON when the operation panel is in the monitor mode. Quickly blinks twice intermittently while the protective function is activated. Slowly blinks when the display-off function of the operation panel is valid. PRM: ON when the operation panel is in the parameter setting mode.
(c)	IM PM	Controlled motor type LED indicator	IM: ON when the inverter is set to control the induction motor. PM: ON when the inverter is set to control the PM motor. The indicator blinks during test operation.
(d)	Hz	Frequency unit LED indicator	ON when the actual frequency is monitored. (Blinks when the set frequency is monitored.)
(e)		Monitor (5-digit LED)	Shows a numeric value (readout) of a monitor item such as the frequency or a parameter number. (The monitor item can be changed according to the settings of **Pr.52, Pr.774 to Pr.776**.)
(f)	P.RUN	PLC function LED indicator	ON when the PLC function of the inverter is valid.
(g)	FWD REV	FWD key, REV key	FWD key: Starts forward rotation operation. Its LED is ON during forward rotation operation. REV key: Starts reverse rotation operation. Its LED is ON during reverse rotation operation. Either LED blinks under the following conditions. • When the frequency command is not given even if the forward/reverse command is given. • When the frequency command is equal to the starting frequency or lower. • When the MRS signal is being input.
(h)	STOP RESET	STOP/RESET key	Stops the operation commands. Used to reset the inverter when the protective function is activated.
(i)		Setting dial	The setting dial of the Mitsubishi Electric inverters. Turn the setting dial to change the setting of frequency or parameter, etc. Press the setting dial to perform the following operations: • To display a set frequency on the LED display in the monitor mode. (The monitor item shown on the display can be changed by using **Pr.992**.) • To display the present setting during calibration. • To display a fault history number in the fault history mode
(j)	MODE	MODE key	Switches the operation panel to a different mode. The easy setting of the inverter operation mode is enabled by pressing this key simultaneously with PU EXT. Every key on the operation panel becomes inoperable by holding this key for 2 seconds. The key inoperable function is invalid when **Pr.161** = "0 (initial setting)". (Refer to page 192.)
(k)	SET	SET key	Confirms each selection. When this key is pressed during inverter operation, the monitor item changes. (The monitor item on each screen can be changed according to the settings of **Pr.52, Pr.774 to Pr.776**.) Initial setting in the monitor mode Output frequency → Output current → Output voltage
(l)	ESC	ESC key	Goes back to the previous display. Holding this key for a longer time changes the display back to the monitor mode.
(m)	PU EXT	PU/EXT key	Switches between the PU operation mode, the PUJOG operation mode, and the External operation mode. The easy setting of the inverter operation mode is enabled by pressing this key simultaneously with MODE. Also cancels the PU stop warning.

上上下下電腦有限公司
購買 維修 評估 推廣咨詢
電話 03 7480833
Email: sales@cyberdyne.com.hk
Line id: @cyberdyne
www.cyberdyne.com.hk

4.1.2 Basic operation of the operation panel

◆ Basic operation

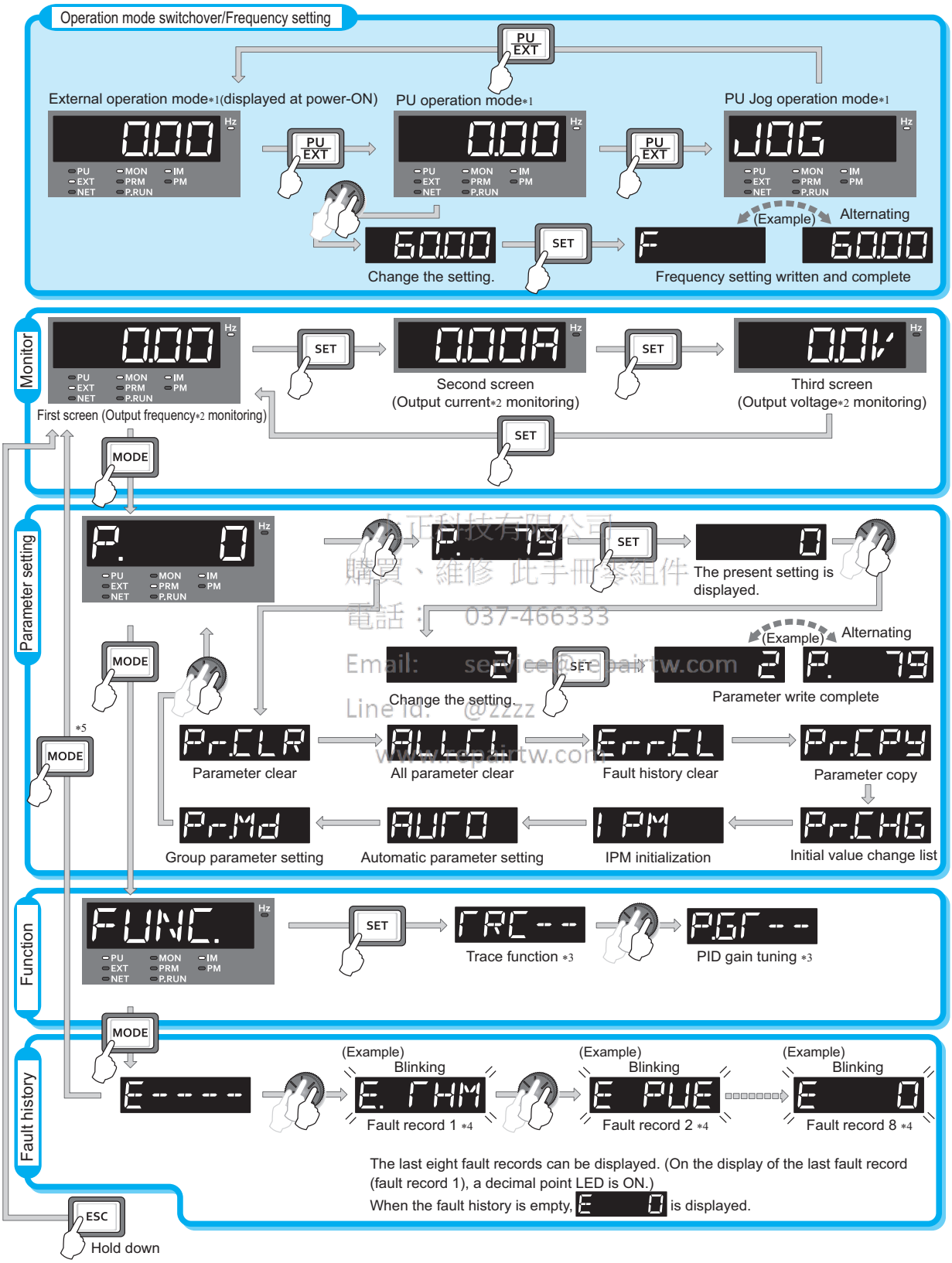

大正科技有限公司
購買、維修 此手冊零組件
電話： 037-466333
Email: service@repairtw.com
Line Id: @zzzz
www.repairtw.com

*1 For the details of operation modes, refer to page 228.
*2 The monitor item can be changed. (Refer to page 288.)
*3 For the details of the trace function, refer to page 465. For the details of the PID gain tuning, refer to page 417.
*4 For the details of fault history, refer to page 568.
*5 The USB memory mode indication appears while a USB memory device is connected. (Refer to page 74.)

◆ Parameter setting mode

In the parameter setting mode, inverter functions (parameters) are set.

The following table explains the indications in the parameter setting mode.

Operation panel indication	Function name	Description	Refer to page
P.	Parameter setting mode	Under this mode, the set value of the displayed parameter number is read or changed.	110
Pr.CLR	Parameter clear	Clears and resets parameter settings to the initial values. Calibration parameters and offline auto tuning parameters are not cleared. For the details of the uncleared parameters, refer to page 638.	551
ALL.CL	All parameter clear	Clears and resets parameter settings to the initial values. Calibration parameters and the offline auto tuning parameters are also cleared. For the details of the uncleared parameters, refer to page 638.	551
Err.CL	Fault history clear	Deletes the fault history.	564
Pr.CPY	Parameter copy	Copies the parameter settings saved in the inverter to the operation panel. The parameters copied to the operation panel can be also copied to other inverters.	552
Pr.CHG	Initial value change list	Identifies the parameters that have been changed from their initial settings.	559
I PM	IPM initialization	Changes the parameters to the settings required to drive an IPM motor (MM-EFS or MM-THE4) as a batch. Also changes the parameters back to the settings required to drive an induction motor.	174
AUTO	Automatic parameter setting	Changes parameter settings as a batch. The target parameters include communication parameters for the Mitsubishi Electric human machine interface (GOT) connection and the parameters for the rated frequency settings of 50 Hz/60 Hz.	200
Pr.Md	Group parameter setting	Displays parameter numbers by function groups.	156

上正科技有限公司
購買、維修 此手冊零組件
電話： 037-466333
Email: service@repairtw.com
Line id: @zzzz
www.repairtw.com

4.1.3 Digital characters and their corresponding printed equivalents

Digital characters displayed on the operation panel display are as follows.

0	1	2	3	4	5	6	7	8	9	A	B(b)	C	c	D(d)
0	1	2	3	4	5	6	7	8	9	A	b	C	c	d
E(e)	F(f)	G(g)	H(h)	I(i)	J(j)	K(k)	L(l)	M(m)	N	n	O	o	P(p)	Q(q)
E	F	G	H	I	J	K	L	M	N	n	O	o	P	Q
R	r	S(s)	T(t)	U	u	V	v	W	w	X(x)	Y(y)	Z(z)		
R	r	S	T	U	u	V	v	W	w	X	Y	Z		

4.1.4 Changing the parameter setting value

The following shows the procedure to change the setting of **Pr.1 Maximum frequency**.

Operating procedure

1. Turning ON the power of the inverter

The operation panel is in the monitor mode.

2. Changing the operation mode

Press [PU EXT] to choose the PU operation mode. [PU] indicator turns ON.

3. Selecting the parameter setting mode

Press [MODE] to choose the parameter setting mode. (The parameter number read previously appears.)

4. Selecting the parameter

Turn ⊛ until "P. 1" (**Pr.1**) appears. Press [SET] to read the present set value.

" 120.00" (initial value) appears.

5. Changing the setting value

Turn ⊛ to change the set value to " 60.00". Press [SET] to confirm the selection. " 60.00 " and "P. 1" are displayed alternately.

- Turn ⊛ to read another parameter.
- Press [SET] to show the setting again on the LCD display.
- Press [SET] twice to show the next parameter.
- Press [MODE] three times to return the monitor display to the indication of the frequency.

上正科技有限公司
購買 維修 此手冊零組件
電話: 037-466333
Email: service@repairtw.com
Line id: @zzzz
www.repairtw.com

NOTE

- If a parameter write condition is not satisfied, a parameter write error appears on the LCD display. (Refer to page 568.)

Error indication	Description
Er 1	Parameter write error
Er2	Write error during operation
Er3	Calibration error
Er4	Mode designation error

- When **Pr.77 Parameter write selection** = "0 (initial setting)," the parameter setting change is only available while the inverter is stopped and under the PU operation mode. To enable the parameter setting change while the inverter is running or under the operation mode other than PU operation mode, change the **Pr.77** setting. (Refer to page 196.)

4.2 Monitoring the inverter

4.2.1 Monitoring of output current and output voltage

Point

- Press SET on the operation panel in the monitor mode to switch the monitor item between output frequency, output current, and output voltage.

4

Operating procedure

1. Press MODE during inverter operation to monitor the output frequency. [Hz] indicator turns ON.
2. Press SET to monitor the output current. This operation is valid under any operation mode of the inverter and whether the inverter is running or at a stop. The unit of current "A" appears.
3. Press SET to monitor the output voltage. The unit of voltage "V" appears.

NOTE

- Other monitor item, such as output power or set frequency, is also available. Use **Pr.52 Operation panel main monitor selection** or **Pr.774 Operation panel monitor selection 1** to **Pr.776 Operation panel monitor selection 3** to change the setting. (Refer to page 288.)

上正科技有限公司
購買、維修 此手冊零組件
電話： 037-466333
Email: service@repairtw.com
Line id: @222
www.repairtw.com

4.2.2 First priority monitor screen

The first priority monitor screen, which is displayed first when the operation panel becomes in the monitor mode, is selectable.

To set it, press SET for a while when the desired monitor item is displayed on a monitor screen.

The following show the procedure to set the monitor screen displaying the output current as the first priority monitor screen.

Operating procedure

1. Change the mode of the operation panel to the monitor mode, and switch the monitor screen to the one on which the output current can be monitored.
2. Press SET for a while (1 second). The output current monitor screen is set as the first priority monitor screen.
3. When the operation panel is in the monitor mode next time, the output current monitored value is displayed first.

NOTE

- Use **Pr.52 Operation panel main monitor selection** or **Pr.774 Operation panel monitor selection 1 to Pr.776 Operation panel monitor selection 3** to change the monitor item. (Refer to page 288.)

4.2.3 Displaying the set frequency

To display the present set frequency, change the mode of the operation panel to the monitor mode and press the setting dial ( ) while the inverter runs in the PU operation mode or in the External/PU combined operation mode 1 (**Pr.79 Operation mode selection** = "3").

NOTE

- Use **Pr.992 Operation panel setting dial push monitor selection** to change the item to be displayed. (Refer to page 288.)

4.3 Easy setting of the inverter operation mode

The operation mode suitable for start and speed command combinations can be set easily using **Pr.79 Operation mode selection**.

The following shows the procedure to operate with the external start command (STF/STR) and the frequency command by using .

Operating procedure

1. Press [PU/EXT] and [MODE] for 0.5 seconds.

2. Turn until "79- - -3" (External/PU combined operation mode 1) appears. (For other settings, refer to the following table.)

3. Press [SET] to confirm the selection. External/PU combined operation mode 1 (**Pr.79** = "3") is set.

Operation panel indication	Operation method		Operation mode
	Start command	Frequency command	
Blinking 79- - -1	FWD, REV	*1	PU operation mode
Blinking 79- - -2	External (STF, STR)	Analog voltage input	External operation mode
Blinking 79- - -3	External (STF, STR)	*1	External/PU combined operation mode 1
Blinking 79- - -4	FWD, REV	Analog voltage input	External/PU combined operation mode 2

上揚科技有限公司
購買、維修 此手冊零組件
電話： 037-466333
Email: service@repairtw.com
Line id: @zzzz
www.repairtw.com

*1 To use the setting dial as a potentiometer, refer to page 192.

NOTE

- "Er 1" appears if the **Pr.79** setting is tried to be changed while the inverter is set that only the parameters registered in the user group are read (**Pr.160** = "1") but **Pr.79** is not included in the user group.
- "Er2" appears if a setting change is attempted during inverter operation. Turn OFF the start command (FWD/REV, or STF/STR signal).
- If MODE is pressed before pressing SET, the easy setting is terminated and the operation panel returns to the monitor mode. If the easy setting is terminated while **Pr.79** = "0 (initial value)", check the inverter operation mode because the inverter may switch its operation mode between the PU operation mode and the External operation mode.
- Reset by pressing STOP RESET is enabled.
- The priorities of the frequency commands while **Pr.79** = "3" are "Multi-speed operation (RL/RM/RH/REX) > PID control (X14) > terminal 4 analog input (AU) > digital input from the operation panel".

上正科技有限公司
購買、維修 此手冊零組件
電話： 037-466333
Email: service@repairtw.com
Line id: @zzzz
www.repairtw.com

4.4 Frequently-used parameters (simple mode parameters)

Parameters that are frequently used for the FR-F800 series are grouped as simple mode parameters.
When **Pr.160 User group read selection** = "9999", only the simple mode parameters are displayed on the operation panel.
This section explains the simple mode parameters.

4.4.1 Simple mode parameter list

For simple variable-speed operation of the inverter, the initial values of the parameters may be used as they are. Set the necessary parameters to meet the load and operational specifications. Parameter's setting, change and check can be made on the operation panel (FR-DU08).

Point

- **Pr.160 User group read selection** can narrow down the displayed parameters to only the simple mode parameters. Set **Pr.160 User group read selection** as required. (To change the parameter setting, refer to page 110.)

Pr.160 setting	Description
9999 (FM type initial value)	Only simple mode parameters are displayed.
0 (CA type initial value)	All parameters (simple mode parameters and extended parameters) are displayed.
1	Only parameters registered in user groups are displayed.

Pr.	Pr. group	Name	Increment	Initial value[*11] FM	Initial value[*11] CA	Range	Application	Refer to page
0	G000	Torque boost	0.1%	6%[*1]		0 to 30%	Set this parameter to obtain a higher starting torque under V/F control. Also set this when a loaded motor cannot be driven, the warning "OL" occurs, and the inverter output is shut off with the fault indication "E.OC1".	527
				4%[*2]				
				3%[*3]				
				2%[*4]				
				1.5%[*5]				
				1%[*6]				
1	H400	Maximum frequency	0.01 Hz	120 Hz[*7]		0 to 120Hz	Set the upper limit for the output frequency.	271
				60Hz[*8]				
2	H401	Minimum frequency	0.01 Hz	0 Hz		0 to 120 Hz	Set the lower limit for the output frequency.	
3	G001	Base frequency	0.01 Hz	60 Hz	50 Hz	0 to 590 Hz	Set this parameter when the rated motor frequency is 50 Hz. Check the rating plate of the motor.	528
4	D301	Multi-speed setting (high speed)	0.01 Hz	60 Hz	50 Hz	0 to 590 Hz	Pre-set the speeds that will be switched among by terminals.	118, 123, 249
5	D302	Multi-speed setting (middle speed)	0.01 Hz	30 Hz		0 to 590 Hz		
6	D303	Multi-speed setting (low speed)	0.01 Hz	10 Hz		0 to 590 Hz		
7	F010	Acceleration time	0.1 s	5 s[*9]		0 to 3600 s	Set the acceleration time.	216
				15 s[*10]				
8	F011	Deceleration time	0.1 s	10 s[*9]		0 to 3600 s	Set the deceleration time.	
				30s[*10]				
9	H000 C103	Electronic thermal O/L relay	0.01 A[*7]	Inverter rated current		0 to 500 A[*7]	Protects the motor from heat. Set the rated motor current.	252
			0.1A[*8]			0 to 3600A[*8]		
79	D000	Operation mode selection	1	0		0 to 4, 6, 7	Select the start and frequency command sources.	228

台灣總代理有限公司
購買、維修 此手冊零組件
電話: 037-466333
Email: service@repairtw.com
Line id: @zzzz
www.repairtw.com

Pr.	Pr. group	Name	Increment	Initial value*11		Range	Application	Refer to page
				FM	CA			
125	T022	Terminal 2 frequency setting gain frequency	0.01 Hz	60 Hz	50 Hz	0 to 590 Hz	Allows the frequency at the maximum potentiometer setting (5 V in the initial setting) to be changed.	126, 339
126	T042	Terminal 4 frequency setting gain frequency	0.01 Hz	60 Hz	50 Hz	0 to 590 Hz	Allows the frequency at the maximum current input (20 mA in the initial setting) to be changed.	128, 339
160	E440	User group read selection	1	9999	0	0, 1, 9999	This function restricts the parameters that are read by the operation panel and parameter unit.	204
998	E430	PM parameter initialization	1	0		0, 12, 112, 8009, 8109, 9009, 9109	Selects the PM motor control and set the parameters that are required to drive a PM motor.	174
999	E431	Automatic parameter setting	1	9999		1, 2, 10, 11, 12, 13, 20, 21, 9999	Changes parameter settings as a batch. The target parameters include communication parameters for the Mitsubishi Electric human machine interface (GOT) connection and the parameters for the rated frequency settings of 50/60 Hz.	200

*1 Initial value for the FR-F820-00046(0.75K) or lower and FR-F840-00023(0.75K) or lower.
*2 Initial value for the FR-F820-00077(1.5K) to FR-F820-00167(3.7K) and the FR-F840-00038(1.5K) to FR-F840-00083(3.7K).
*3 Initial value for the FR-F820-00250(5.5K), FR-F820-00340(7.5K), FR-F840-00126(5.5K), and FR-F840-00170(7.5K).
*4 Initial value for the FR-F820-00490(11K) to FR-F820-01540(37K), FR-F840-00250(11K) to FR-F840-00770(37K).
*5 Initial value for the FR-F820-01870(45K), FR-F820-02330(55K), FR-F840-00930(45K), and FR-F840-01160(55K).
*6 Initial value for the FR-F820-03160(75K) or higher and FR-F840-01800(75K) or higher.
*7 For the FR-F820-02330(55K) or lower and FR-F840-01160(55K) or lower.
*8 For the FR-F820-75K(03160) or higher and FR-F840-75K(01800) or higher.
*9 Initial value for the FR-F820-00340(7.5K) or lower and FR-F840-00170(7.5K) or lower.
*10 Initial value for the FR-F820-00490(11K) or higher and FR-F840-00250(11K) or higher.
*11 The initial value in "FM" column is for the FM-type inverter that has terminal FM, and that in "CA" column is for the CA-type inverter that has terminal CA.

原廠授權總公司
歡迎來電洽詢 專業團隊為您服務
電話： 037-466333
Email: service@repairtw.com
Line id: @zzzz
www.repairtw.com

4.5 Basic operation procedure (PU operation)

Select a method to give the frequency command from the list below, and refer to the specified page for its procedure.

Method to give the frequency command	Refer to page
Setting the frequency on the operation panel in the frequency setting mode	116
Give commands by turning the setting dial like a potentiometer	117
Give commands by turning ON/OFF switches wired to inverter's terminals (multi-speed setting)	118
Setting the frequency by inputting voltage signals	119
Setting the frequency by inputting current signals	120

4.5.1 Setting the frequency on the operation panel (example: operating at 30 Hz)

Point

- Use the operation panel (FR-DU08) to give a start command and a frequency command. (PU operation)

Operation panel (FR-DU08)

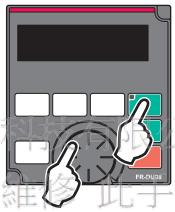

上正科技有限公司
購買、維修 此手冊零組件
電話： 037-466333
Email: service@repairtw.com
Line Id: @zzzz
www.repairtw.com

The following shows the procedure to operate at 30 Hz.

Operating procedure

1. Turning ON the power of the inverter

The operation panel is in the monitor mode.

2. Changing the operation mode

Press [PU EXT] to choose the PU operation mode. [PU] indicator turns ON.

3. Setting the frequency

Turn ⊛ until the target frequency "30.00" (30.00 Hz) appears. The indication blinks for about five seconds.

While the indication is flashing, press [SET] to confirm the selection for the frequency. "F" and "30.00" are displayed alternately. After about three seconds of alternate display, the monitor display goes back to "0.00" (the indication of a monitored value).

(If [SET] is not pressed during the flashing for about five seconds, the monitor display goes back to "0.00" (0.00 Hz). In that case, turn ⊛ again and set the frequency.)

4. Start → acceleration → constant speed

Press [FWD] or [REV] to start running. The frequency value on the monitor increases according to the setting of **Pr.7 Acceleration time**, and "30.00" (30.00 Hz) appears on the monitor.

(To change the set frequency, return to step 3. The previously set frequency appears.)

5. Deceleration → stop

Press STOP RESET to stop. The frequency value on the monitor decreases according to the setting of **Pr.8 Deceleration time**, the monitor displays "0.00" (0.00 Hz), and the motor stops rotating.

NOTE

- To display the set frequency under PU operation mode or External/PU combined operation mode 1 (**Pr.79** = "3"), press . (Refer to page 288.)
- can also be used like a potentiometer to perform inverter operation. (Refer to page 117.)

Parameters referred to

Pr.7 Acceleration time, Pr.8 Deceleration time ☞ page 216
Pr.79 Operation mode selection ☞ page 228

4.5.2 Perform PU operation using the setting dial like a potentiometer

Point

- Set **Pr.161 Frequency setting/key lock operation selection** = "1" (setting dial potentiometer).

The following shows the procedure to change the frequency from 0 Hz to 60 Hz during operation.

Operating procedure

上正科技有限公司
購買、維修 此手冊零組件
電話： 037-466333
Email: service@repairtw.com
Line id: @zzzz
www.repairtw.com

1. Turning ON the power of the inverter
The operation panel is in the monitor mode.

2. Changing the operation mode

Press PU EXT to choose the PU operation mode. [PU] indicator turns ON.

3. Changing the parameter setting
Change **Pr.161** setting to "1". (To change the setting, refer to page 110.)

4. Start

Press FWD or REV to start the inverter operation.

5. Setting the frequency

Turn until "60.00" appears. The value in the flashing indication is set as the value of a set frequency (The indication blinks for about five seconds). SET needs not to be pressed.

NOTE

- If the indication changes from the blink of "60.00" to the display of "0.00", **Pr.161 Frequency setting/key lock operation selection** may be set to a value other than "1".
- Simply turning enables frequency setting whether the inverter is running or at a stop.
- The newly-set frequency is saved as the set frequency in EEPROM after 10 seconds.
- With the setting dial, the frequency can go up to the setting value of **Pr.1 Maximum frequency**. Check the **Pr.1 Maximum frequency** setting, and adjust the setting according to the application.

Parameters referred to

Pr.1 Maximum frequency ☞ page 271
Pr.161 Frequency setting/key lock operation selection ☞ page 192

4.5.3 Setting the frequency with switches (multi-speed setting)

Point

- Use FWD or REV on the operation panel (FR-DU08) to give a start command.
- Turn ON the RH, RM, or RL signal to give a frequency command (multi-speed setting).
- Set **Pr.79 Operation mode selection** = "4" (External/PU combination operation mode 2).

[Connection diagram]

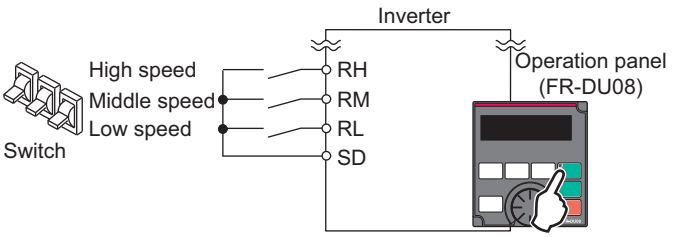

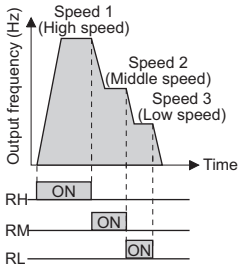

The following shows the procedure to operate at a low speed (10 Hz).

Operating procedure

上正科技有限公司
購買、維修 此手冊零組件
電話： 037-466333
Email: service@repairtw.com
Line id: @zzzz
www.repairtw.com

1. Turning ON the power of the inverter

The operation panel is in the monitor mode.

2. Changing the operation mode

Set "4" in **Pr.79**. [PU] and [EXT] indicators are ON. (To change the setting, refer to page 112.)

3. Setting the frequency

Turn ON the low-speed switch (RL signal).

4. Start → acceleration → constant speed

Press FWD or REV to start running. The frequency value on the monitor increases according to the setting of **Pr.7 Acceleration time**, and " 10.00 " (10.00 Hz) appears on the monitor.

5. Deceleration → stop

Press STOP RESET to stop. The frequency value on the monitor decreases according to the setting of **Pr.8 Deceleration time**, the monitor displays " 0.00 " (0.00 Hz), and the motor stops rotating. Turn OFF the low-speed switch (RL signal).

NOTE

- Initially, the high-speed switch (RH signal) is set to 60 Hz for the FM type inverter or 50 Hz for the CA type inverter. The middle-speed switch (RM signal) is set to 30 Hz, and the low-speed switch (RL signal) is set to 10 Hz. (To change the settings, use **Pr.4**, **Pr.5**, and **Pr.6**, respectively.)
- In the initial setting, if two or more speed switches (signals) are simultaneously turned ON, priority is given to the switch (signal) for the lower speed. For example, when both RH and RM signals turn ON, the RM signal (**Pr.5**) has the higher priority.
- Up to 15-speed switching operation can be performed.

Parameters referred to

Pr.4 to Pr.6 (multi-speed setting) page 249
Pr.7 Acceleration time, Pr.8 Deceleration time page 216
Pr.79 Operation mode selection page 228

4.5.4 Setting the frequency using an analog signal (voltage input)

Point

- Use FWD or REV on the operation panel (FR-DU08) to give a start command.
- Use the frequency setting potentiometer to give a frequency command (by connecting it to terminals 2 and 5 (voltage input)).
- Set **Pr.79 Operation mode selection** = "4" (External/PU combination operation mode 2).

[Connection diagram] (The inverter supplies 5 V power to the frequency setting potentiometer via terminal 10.)

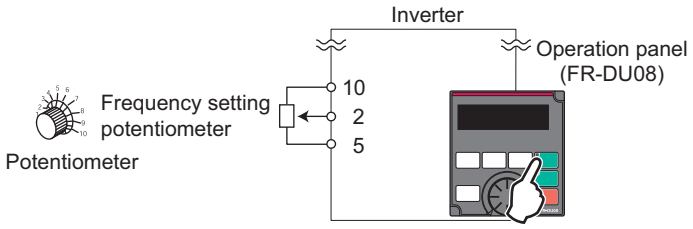

The following shows the procedure to operate at 60 Hz.

Operating procedure

1. Turning ON the power of the inverter

The operation panel is in the monitor mode.

2. Changing the operation mode

Set "4" in **Pr.79**. [PU] and [EXT] indicators are ON. (To change the setting, refer to page 110.)

3. Start

Press FWD or REV. [FWD] or [REV] indicator blinks as no frequency command is given.

4. Acceleration → constant speed

Turn the frequency setting potentiometer clockwise slowly to full. The frequency value on the monitor increases according to the setting of **Pr.7 Acceleration time**, and "60.00" (60.00 Hz) appears on the monitor.

5. Deceleration

Turn the frequency setting potentiometer counterclockwise slowly to full. The frequency value on the monitor decreases according to the setting of **Pr.8 Deceleration time**, the monitor displays "0.00" (0.00 Hz), and the motor stops rotating. [FWD] or [REV] indicator blinks.

6. Stop

Press STOP RESET. [FWD] or [REV] indicator turns OFF.

NOTE

- To change the frequency (60 Hz) at the maximum voltage input (initial value: 5 V), adjust **Pr.125 Terminal 2 frequency setting gain frequency**.
- To change the frequency (0 Hz) at the minimum voltage input (initial value: 0 V), adjust **the calibration parameter C2 Terminal 2 frequency setting bias frequency**.

Parameters referred to

Pr.7 Acceleration time, Pr.8 Deceleration time page 216
Pr.79 Operation mode selection page 228
Pr.125 Terminal 2 frequency setting gain frequency page 339
C2 (Pr.902) Terminal 2 frequency setting bias frequency page 339

上正科技有限公司
購買・維修 此手冊零組件
電話： 037-466333
Email: service@repairtw.com
Line id: @zzzz
www.repairtw.com

4.5.5 Setting the frequency using an analog signal (current input)

Point

- Use FWD or REV on the operation panel (FR-DU08) to give a start command.
- Use the current regulator which outputs 4 to 20 mA to give a frequency command (by connecting it across terminals 4 and 5 (current input)).
- Turn ON the AU signal.
- Set **Pr.79 Operation mode selection** = "4" (External/PU combination operation mode 2).

[Connection diagram]

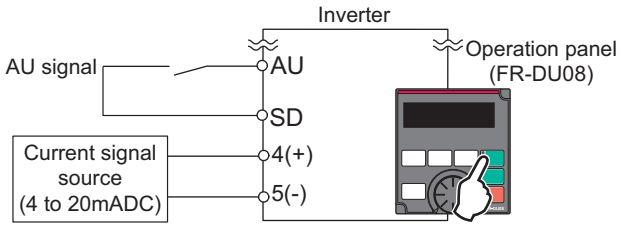

The following shows the procedure to operate at 60 Hz.

Operating procedure

1. Turning ON the power of the inverter

The operation panel is in the monitor mode.

2. Changing the operation mode

Set "4" in **Pr.79**. [PU] and [EXT] indicators are ON. (To change the setting, refer to page 110.)

3. Selecting the input via terminal 4

Turn ON the Terminal 4 input selection (AU) signal. Input via terminal 4 to the inverter is enabled.

4. Start

Press FWD or REV. [FWD] or [REV] indicator blinks as no frequency command is given.

5. Acceleration → constant speed

Input a current of 20 mA to the inverter from the regulator. The frequency value on the monitor increases according to the setting of **Pr.7 Acceleration time**, and "60.00" (60.00 Hz) appears on the monitor.

6. Deceleration

Input a current of 4 mA or less. The frequency value on the monitor decreases according to the setting of **Pr.8 Deceleration time**, the monitor displays "0.00" (0.00 Hz), and the motor stops rotating. [FWD] or [REV] indicator blinks.

7. Stop

Press STOP RESET. [FWD] or [REV] indicator turns OFF.

NOTE

- **Pr.184 AU terminal function selection** must be set to "4 (initial value)" (AU signal).
- To change the frequency (60 Hz) at the maximum current input (initial value: 20 mA), adjust **Pr.126 Terminal 4 frequency setting gain frequency**.
- To change the frequency (0 Hz) at the minimum current input (initial value: 4 mA), adjust **the calibration parameter C5 Terminal 4 frequency setting bias frequency**.

Parameters referred to

Pr.7 Acceleration time, Pr.8 Deceleration time ☞ page 216
Pr.79 Operation mode selection ☞ page 228
Pr.126 Terminal 4 frequency setting gain frequency ☞ page 339

上正科技有限公司
購買、維修 此手冊零組件
電話： 037-466333
Email: service@repairtw.com
Line id: @zzzz
www.repairtw.com

Pr.184 AU terminal function selection ☞ page 355
C5(Pr.904) Terminal 4 frequency setting bias frequency ☞ page 339

上正科技有限公司
購買、維修 此手冊零組件
電話： 037-466333
Email: service@repairtw.com
Line id: @zzzz
www.repairtw.com

4.6 Basic operation procedure (External operation)

Select a method to give the frequency command from the list below, and refer to the specified page for its procedure.

Method to give the frequency command	Refer to page
Setting the frequency on the operation panel in the frequency setting mode	122
Turning ON/OFF switches wired to inverter's terminals (multi-speed setting)	123
Setting the frequency by inputting voltage signals	124
Setting the frequency by inputting current signals	127

4.6.1 Setting the frequency on the operation panel

Point

- Turn ON the STF/STR signal to give a start command.
- Use on the operation panel (FR-DU08) to give a frequency command.
- Set **Pr.79** = "3" (External/PU combined operation mode 1).

[Connection diagram]

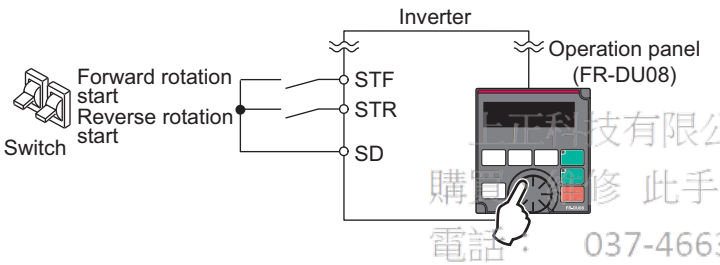

上正科技有限公司
購買 維修 此手冊零組件
電話: 037-466333
Email: service@repairtw.com
Line id: @zzzz
www.repairtw.com

The following shows the procedure to operate at 30 Hz.

Operating procedure

1. Changing the operation mode

Set "3" in **Pr.79**. [PU] and [EXT] indicators are ON. (To change the setting, refer to page 110.)

2. Setting the frequency

Turn until the target frequency "30.00" (30.00 Hz) appears. The indication blinks for about five seconds.

While the indication is flashing, press SET to confirm the selection for the frequency. "F" and "30.00"are displayed alternately. After about three seconds of alternate display, the monitor display goes back to "0.00" (the indication of a monitored value). (If SET is not pressed during the flashing for about five seconds, the monitor display goes back to "0.00" (0.00 Hz). In that case, turn again and set the frequency.)

3. Start → acceleration → constant speed

Turn ON the start switch (STF/STR signal). The frequency value on the monitor increases according to the setting of **Pr.7 Acceleration time**, and "30.00" (30.00 Hz) appears on the monitor. [FWD] indicator is ON during the forward rotation, and [REV] indicator is ON during the reverse rotation. (To change the set frequency, return to step 2. The previously set frequency appears.)

4. Deceleration → stop

Turn OFF the start switch (STF/STR signal). The frequency value on the monitor decreases according to the setting of **Pr.8 Deceleration time**, the monitor displays "0.00" (0.00 Hz), and the motor stops rotating.

NOTE

- When both the forward rotation start switch (STF signal) and the reverse rotation start switch (STR signal) are turned ON, the motor cannot be started. If both are turned ON while the inverter is running, the inverter decelerates to a stop.
- **Pr.178 STF terminal function selection** must be set to "60" (or **Pr.179 STR terminal function selection** must be set to "61") (initial value).
- Setting **Pr.79 Operation mode selection** = "3" enables multi-speed operation.
- If [STOP RESET] on the operation panel is pressed during the External operation, the inverter stops and the PU stop warning is activated ("PS" appears on the LCD display of the operation panel). To reset the PU stop warning, turn OFF the start switch (STF or STR signal), and then press [PU EXT] (refer to page 190).

4

Parameters referred to

Pr.4 to Pr.6 Multi-speed setting ☞ page 249, **Pr.7 Acceleration time, Pr.8 Deceleration time** ☞ page 216
Pr.178 STF terminal function selection, Pr.179 STR terminal function selection ☞ page 355
Pr.79 Operation mode selection ☞ page 228

4.6.2 Setting the frequency and giving a start command with switches (multi-speed setting) (Pr.4 to Pr.6)

Point

- Turn ON the STF/STR signal to give a start command.
- Turn ON the RH, RM, or RL signal to give a frequency command (multi-speed setting).

[Connection diagram]

上正科技有限公司
購買、維修 此手冊零組件
電話： 037-466333
Email: service@repairtw.com
Line id: @zzzz
www.repairtw.com

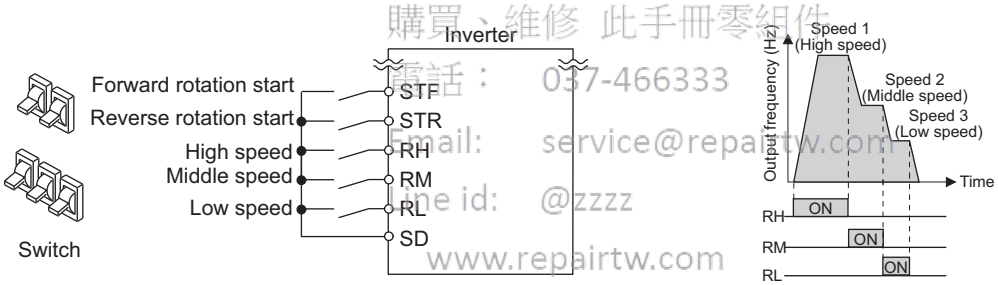

The following shows the procedure to operate at a high speed (60 Hz).

Operating procedure

1. Turning ON the power of the inverter
The operation panel is in the monitor mode.

2. Setting the frequency
Turn ON the high-speed switch (RH signal).

3. Start → acceleration → constant speed
Turn ON the start switch (STF/STR signal). The frequency value on the monitor increases according to the setting of **Pr.7 Acceleration time**, and "60.00" (60.00 Hz) appears on the monitor. [FWD] indicator is ON during the forward rotation, and [REV] indicator is ON during the reverse rotation. When the RM signal is turned ON, 30 Hz is displayed. When the RL signal is turned ON, 10 Hz is displayed.

4. Deceleration → stop
Turn OFF the start switch (STF/STR signal). The frequency value on the monitor decreases according to the setting of **Pr.8 Deceleration time**, the monitor displays "0.00" (0.00 Hz), and the motor stops rotating. [FWD] or [REV] indicator turns OFF. Turn OFF the high-speed switch (RH signal).

NOTE

- When both the forward rotation start switch (STF signal) and the reverse rotation start switch (STR signal) are turned ON, the motor cannot be started. If both are turned ON while the inverter is running, the inverter decelerates to a stop.
- Initially, the high-speed switch (RH signal) is set to 60 Hz for the FM type inverter or 50 Hz for the CA type inverter. The middle-speed switch (RM signal) is set to 30 Hz, and the low-speed switch (RL signal) is set to 10 Hz. (To change the settings, use **Pr.4, Pr.5**, and **Pr.6**, respectively.)
- In the initial setting, if two or more speed switches (signals) are simultaneously turned ON, priority is given to the switch (signal) for the lower speed. For example, when both RH and RM signals turn ON, the RM signal (**Pr.5**) has the higher priority.
- Up to 15-speed switching operation can be performed.

Parameters referred to

Pr.4 to Pr.6 (multi-speed setting) ☞ page 249
Pr.7 Acceleration time, Pr.8 Deceleration time ☞ page 216

4.6.3 Setting the frequency using an analog signal (voltage input)

Point

- Turn ON the STF/STR signal to give a start command.
- Use the frequency setting potentiometer to give a frequency command (by connecting it across terminals 2 and 5 (voltage input)).

[Connection diagram]

(The inverter supplies 5 V power to the frequency setting potentiometer via terminal 10.)

上正科技有限公司
購買、維修 此手冊零組件
電話： 037-466333
Email: service@repairtw.com
Line id: @zzzz
www.repairtw.com

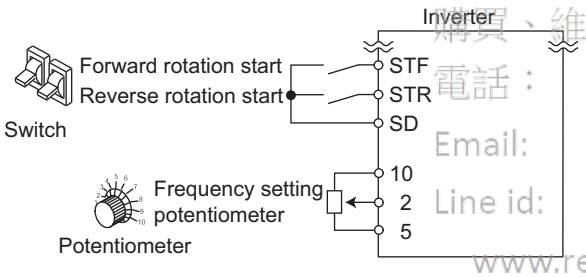

The following shows the procedure to operate at 60 Hz.

Operating procedure

1. Turning ON the power of the inverter

The operation panel is in the monitor mode.

2. Start

Turn ON the start switch (STF/STR signal). [FWD] or [REV] indicator blinks as no frequency command is given.

3. Acceleration → constant speed

Turn the frequency setting potentiometer clockwise slowly to full. The frequency value on the monitor increases according to the setting of **Pr.7 Acceleration time**, and "60.00" (60.00 Hz) appears on the monitor. [FWD] indicator is ON during the forward rotation, and [REV] indicator is ON during the reverse rotation.

4. Deceleration

Turn the frequency setting potentiometer counterclockwise slowly to full. The frequency value on the monitor decreases according to the setting of **Pr.8 Deceleration time**, the monitor displays "0.00" (0.00 Hz), and the motor stops rotating. [FWD] or [REV] indicator blinks.

5. Stop

Turn OFF the start switch (STF/STR signal). [FWD] or [REV] indicator turns OFF.

NOTE

- When both the forward rotation start switch (STF signal) and the reverse rotation start switch (STR signal) are turned ON, the motor cannot be started. If both are turned ON while the inverter is running, the inverter decelerates to a stop.
- **Pr.178 STF terminal function selection** must be set to "60" (or **Pr.179 STR terminal function selection** must be set to "61") (initial value).

Parameters referred to

Pr.7 Acceleration time, Pr.8 Deceleration time ☞ page 216
Pr.178 STF terminal function selection, Pr.179 STR terminal function selection ☞ page 355

上正科技有限公司
購買、維修 此手冊零組件
電話： 037-466333
Email: service@repairtw.com
Line id: @zzzz
www.repairtw.com

4.6.4 Changing the frequency (60 Hz, initial value) at the maximum voltage input (5 V, initial value)

Point

- Change the maximum frequency.

The following shows the procedure to change the frequency at 5 V from 60 Hz (initial value) to 50 Hz using a frequency setting potentiometer for 0 to 5 VDC input. Set 50 Hz in **Pr.125** so that the inverter outputs 50 Hz at 5 V input.

Operating procedure

1. Selecting the parameter

Turn ⊛ until "P. 125" (**Pr.125**) appears.

Press [SET] to read the present set value. (60.00 Hz)

2. Changing the maximum frequency

Turn ⊛ to change the set value to "50.00". (50.00 Hz)

Press [SET] to confirm the selection. "50.00" and "P. 125"are displayed alternately.

3. Selecting the mode and the monitor item

Press [MODE] three times to select the monitor mode, and change the monitor item to the frequency.

4. Start

Turn ON the start switch (STF/STR signal), and turn the frequency setting potentiometer clockwise slowly to full. (Refer to steps 2 and 3 in 4.6.3.)

The motor is operated at 50 Hz.

上正科技有限公司
購買、維修 此手冊零組件
電話： 037-466333
Email: service@repairtw.com
Line id: @zzzz
www.repairtw.com

NOTE

- To change the frequency at the input of 0 V (minimum voltage), use **the calibration parameter C2**.

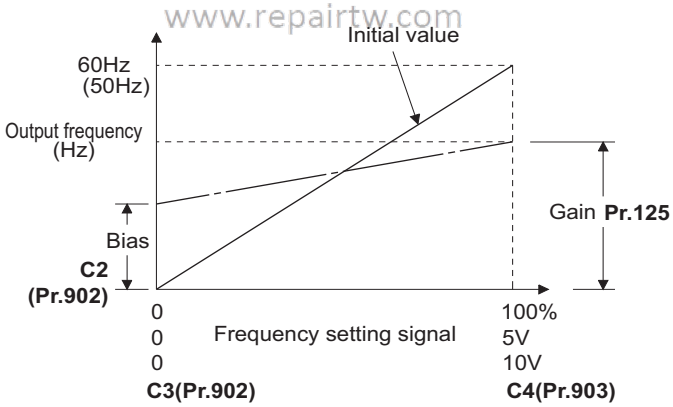

- Other adjustment methods for the frequency setting voltage gain are the following: adjustment by applying a voltage directly across terminals 2 and 5, and adjustment using a specified point without applying a voltage across terminals 2 and 5. (Refer to page 339.)

Parameters referred to

Pr.125 Terminal 2 frequency setting gain frequency ☞ page 339
C2 (Pr.902) Terminal 2 frequency setting bias frequency ☞ page 339
C4 (Pr.903) Terminal 2 frequency setting gain ☞ page 339

4.6.5 Setting the frequency using an analog signal (current input)

Point

- Turn ON the STF/STR signal to give a start command.
- Turn ON the AU signal.
- Set **Pr.79 Operation mode selection** = "2" (External operation mode).

[Connection diagram]

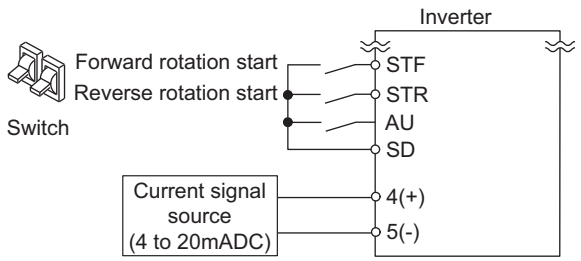

The following shows the procedure to operate at 60 Hz.

Operating procedure

1. Turning ON the power of the inverter

The operation panel is in the monitor mode.

2. Selecting the input via terminal 4

Turn ON the Terminal 4 input selection (AU) signal. Input via terminal 4 to the inverter is enabled.

3. Start

Turn ON the start switch (STF/STR signal). [FWD] or [REV] indicator blinks as no frequency command is given.

4. Acceleration → constant speed

Input a current of 20 mA to the inverter from the regulator. The frequency value on the monitor increases according to the setting of **Pr.7 Acceleration time**, and "6000" (60.00 Hz) appears on the monitor. [FWD] indicator is ON during the forward rotation, and [REV] indicator is ON during the reverse rotation.

5. Deceleration

Input a current of 4 mA or less. The frequency value on the monitor decreases according to the setting of **Pr.8 Deceleration time**, the monitor displays "0.00" (0.00 Hz), and the motor stops rotating. [FWD] or [REV] indicator blinks.

6. Stop

Turn OFF the start switch (STF/STR signal). [FWD] or [REV] indicator turns OFF.

上正科技有限公司
購買、維修、此手冊零組件
電話： 037-466333
Email: service@repairtw.com
Line id: @zzz
www.repairtw.com

NOTE

- When both the forward rotation start switch (STF signal) and the reverse rotation start switch (STR signal) are turned ON, the motor cannot be started. If both are turned ON while the inverter is running, the inverter decelerates to a stop.
- **Pr.184 AU terminal function selection** must be set to "4 (initial value)" (AU signal).

Parameters referred to

Pr.7 Acceleration time, Pr.8 Deceleration time ☞ page 216
Pr.184 AU terminal function selection ☞ page 355

4.6.6 Changing the frequency (60 Hz, initial value) at the maximum current input (at 20 mA, initial value)

Point

- Change the maximum frequency.

The following shows the procedure to change the frequency at 20 mA from 60 Hz (initial value) to 50 Hz using a frequency setting potentiometer for 4 to 20 mA input. Set 50 Hz in **Pr.126** so that the inverter outputs 50 Hz at 20 mA input.

Operating procedure

1. Selecting the parameter

Turn ⊛ until "P. 126" (**Pr.126**) appears.

Press SET to read the present set value (60.00 Hz).

2. Changing the maximum frequency

Turn ⊛ to change the set value to "50.00" (50.00 Hz).

Press SET to confirm the selection. "50.00" and "P. 126"are displayed alternately.

3. Selecting the mode and the monitor item

Press MODE three times to select the monitor mode and to monitor a frequency.

4. Start

Turn ON the start switch (STF or STR) to apply a 20 mA current (refer to steps 3 and 4 in 4.6.5).

Operate at 50 Hz.

上正科技有限公司
購買、維修 此手冊零組件
電話： 037-466333
Email: service@repairtw.com
Line id: @zzzz
www.repairtw.com

NOTE

- To change the frequency at the input of 4 mA (minimum current), use **the calibration parameter C5**.

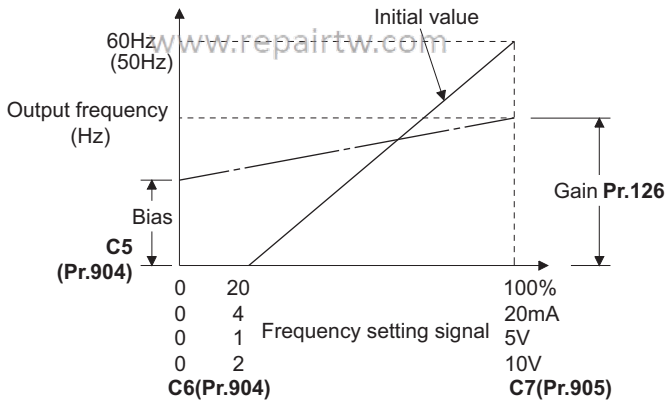

- Other adjustment methods for the frequency setting current gain are the following: adjustment by applying a current through terminals 4 and 5, and adjustment using a specified point without applying a current through terminals 4 and 5. (Refer to page 339.)

Parameters referred to

Pr.126 Terminal 4 frequency setting gain frequency ☞ page 339
C5(Pr.904) Terminal 4 frequency setting bias frequency ☞ page 339
C7(Pr.905) Terminal 4 frequency setting gain ☞ page 339

4.7 Basic operation procedure (JOG operation)

4.7.1 Giving a start command by using external signals for JOG operation

Point

- JOG operation is performed while the JOG signal is ON.
- Use **Pr.15 Jog frequency** to set a frequency, and set **Pr.16 Jog acceleration/deceleration time** to set the acceleration/deceleration time for JOG operation.
- Set **Pr.79 Operation mode selection** = "2" (External operation mode).

4

[Connection diagram]

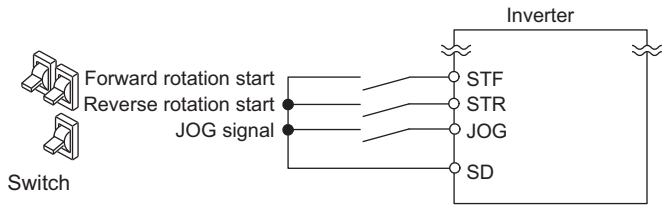

The following shows the procedure to operate at 5 Hz.

Operating procedure

上正科技有限公司
購買、維修 此手冊零組件
電話： 037-466333
Email: service@repairtw.com
Line id: @zzzz
www.repairtw.com

1. Turning ON the power of the inverter
The operation panel is in the monitor mode.

2. Turning ON the JOG signal
Turn ON the JOG switch (JOG signal). The inverter is set ready for the JOG operation.

3. Start → acceleration → constant speed
Turn ON the start switch (STF/STR signal). The frequency increases according to the setting of **Pr.16 Jog acceleration/deceleration time**, and "5.00" (5.00 Hz) appears on the LCD display. [FWD] indicator is ON during the forward rotation, and [REV] indicator is ON during the reverse rotation.

4. Deceleration → stop
Turn OFF the start switch (STF/STR signal). The frequency decreases according to the setting of **Pr.16 Jog acceleration/deceleration time**. "0.00" (0.00 Hz) appears on the LCD display, and the motor stops rotating. [FWD] or [REV] indicator turns OFF. Turn OFF the JOG switch (JOG signal).

NOTE

- To change the running frequency, change the setting of **Pr.15 Jog frequency** (initial value: 5 Hz).
- To change the acceleration/deceleration time, change the setting of **Pr.16 Jog acceleration/deceleration time** (initial value: 0.5 seconds).

Parameters referred to

Pr.15 Jog frequency, Pr.16 Jog acceleration/deceleration time ☞ page 248
Pr.79 Operation mode selection ☞ page 228

4.7.2 Giving a start command from the operation panel for JOG operation

Point

- JOG operation is performed while FWD or REV on the operation panel is pressed.

Operation panel
(FR-DU08)

The following shows the procedure to operate at 5 Hz.

Operating procedure

1. Turning ON the power of the inverter

The operation panel is in the monitor mode.

2. Changing the operation mode

Press PU EXT twice to choose the PUJOG operation mode. The display shows " JOG ", and [PU] indicator is ON.

3. Start → acceleration → constant speed

Hold FWD or REV down to keep the JOG operation. The frequency increases according to the setting of **Pr.16 Jog acceleration/deceleration time**, and "5.00" (5.00 Hz) appears on the LCD display.

4. Deceleration → stop

Release FWD or REV. The frequency decreases according to the setting of **Pr.16 Jog acceleration/deceleration time**. "0.00" (0.00 Hz) appears on the LCD display, and the motor stops rotating.

上正科技有限公司
購買、維修 此手冊零組件
電話: 037-456333
Email: service@repairtw.com
Line id: @zzzz
www.repairtw.com

NOTE

- To change the running frequency, change the setting of **Pr.15 Jog frequency** (initial value: 5 Hz).
- To change the acceleration/deceleration time, change the setting of **Pr.16 Jog acceleration/deceleration time** (initial value: 0.5 seconds).

Parameters referred to

Pr.15 Jog frequency, Pr.16 Jog acceleration/deceleration time ☞ page 248

CHAPTER 5 PARAMETERS

5.1 Parameter list 132
5.2 Control method 167
5.3 Speed control under PM motor control 180
5.4 (E) Environment setting parameters 186
5.5 (F) Setting of acceleration/deceleration time and acceleration/deceleration pattern 216
5.6 (D) Operation command and frequency command 228
5.7 (H) Protective function parameter 252
5.8 (M) Item and output signal for monitoring 286
5.9 (T) Multi-function input terminal parameters 330
5.10 (C) Motor constant parameters 362
5.11 (A) Application parameters 386
5.12 (N) Communication operation parameters 473
5.13 (G) Control parameters 527
5.14 Parameter clear / All parameter clear 551
5.15 Copying and verifying parameters on the operation panel 552
5.16 Copying and verifying parameters using a USB memory 555
5.17 Checking parameters changed from their initial values (initial value change list) 559

上正科技有限公司
購買、維修 此手冊零組件
電話： 037-466333
Email: service@repairtw.com
Line id: @222
www.repairtw.com

5 PARAMETERS

This chapter explains the function setting for use of this product.
Always read the instructions before use.
The following marks are used to indicate the controls. (Parameters without any mark are valid for all the controls.)

Mark	Control method	Applied motor
V/F	V/F control	Three-phase induction motor
Magnetic flux	Advanced magnetic flux vector control	
PM	PM motor control	PM motor

The setting range and the initial value of parameters differ depending on the structure or functions of the inverter. The following common designations are used for each type of the inverter models.

Inverter model	Common designation
FR-F8[]0	Standard model
FR-F8[]2	Separated converter type
FR-F8[]6	IP55 compatible model

5.1 Parameter list

5.1.1 Parameter list (by parameter number)

上正科技有限公司
購買、維修、此手机零组件
電話： 037-466333
Email: service@repairtw.com
Line id: @zzzz
www.repairtw.com

For simple variable-speed operation of the inverter, the initial values of the parameters may be used as they are. Set the necessary parameters to meet the load and operational specifications. Parameter's setting, change and check can be made on the operation panel (FR-DU08).

NOTE

- Simple indicates simple mode parameters. Use **Pr.160 User group read selection** to indicate the simple mode parameters only.
- The changing of the parameter settings may be restricted in some operating statuses. Use **Pr.77 Parameter write selection** to change the setting of the restriction.
- Refer to page 638 for instruction codes for communication and availability of Parameter clear, all clear, and Parameter copy.

Function	Pr.	Pr. group	Name	Setting range	Minimum setting increments	Initial value FM	Initial value CA	Refer to page	Customer setting
Basic function	0	G000	Torque boost Simple	0 to 30%	0.1%	6%[*1]		527	
						4%[*1]			
						3%[*1]			
						2%[*1]			
						1.5%[*1]			
						1%[*1]			
	1	H400	Maximum frequency Simple	0 to 120 Hz	0.01 Hz	120 Hz[*2]		271	
						60 Hz[*3]			
	2	H401	Minimum frequency Simple	0 to 120 Hz	0.01 Hz	0 Hz		271	
	3	G001	Base frequency Simple	0 to 590 Hz	0.01 Hz	60 Hz	50 Hz	528	
	4	D301	Multi-speed setting (high speed) Simple	0 to 590 Hz	0.01 Hz	60 Hz	50 Hz	249	
	5	D302	Multi-speed setting (middle speed) Simple	0 to 590 Hz	0.01 Hz	30 Hz		249	
	6	D303	Multi-speed setting (low speed) Simple	0 to 590 Hz	0.01 Hz	10 Hz		249	
	7	F010	Acceleration time Simple	0 to 3600 s	0.1 s	5 s[*4]		216	
						15 s[*5]			
	8	F011	Deceleration time Simple	0 to 3600 s	0.1 s	10 s[*4]		216	
						30 s[*5]			
	9	H000 C103	Electronic thermal O/L relay Simple Rated motor current Simple	0 to 500 A[*2]	0.01 A[*2]	Inverter rated current		252, 366, 375	
				0 to 3600 A[*3]	0.1A[*3]				
DC injection brake	10	G100	DC injection brake operation frequency	0 to 120 Hz, 9999	0.01 Hz	3 Hz		535	
	11	G101	DC injection brake operation time	0 to 10 s, 8888	0.1 s	0.5 s		535	
	12	G110	DC injection brake operation voltage	0 to 30%	0.1%	4%[*6]		535	
						2%[*6]			
						1%[*6]			
—	13	F102	Starting frequency	0 to 60 Hz	0.01 Hz	0.5 Hz		225, 226	
—	14	G003	Load pattern selection	0, 1, 12 to 15	1	1		530	
JOG operation	15	D200	Jog frequency	0 to 590 Hz	0.01 Hz	5 Hz		248	
	16	F002	Jog acceleration/ deceleration time	0 to 3600 s	0.1 s	0.5 s		248	
—	17	T720	MRS input selection	0, 2, 4	1	0		357	
—	18	H402	High speed maximum frequency	0 to 590 Hz	0.01 Hz	120 Hz[*2]		271	
						60 Hz[*3]			
—	19	G002	Base frequency voltage	0 to 1000 V, 8888, 9999	0.1 V	9999	8888	528	
Acceleration/deceleration time	20	F000	Acceleration/deceleration reference frequency	1 to 590 Hz	0.01 Hz	60 Hz	50 Hz	216	
	21	F001	Acceleration/deceleration time increments	0, 1	1	0		216	

上正科技有限公司
購買、維修 此手冊零組件
電話: 037-466333
Email: service@repairtw.com
Line id: @zzzz
www.repairtw.com

Function	Pr.	Pr. group	Name	Setting range	Minimum setting increments	Initial value FM	Initial value CA	Refer to page	Customer setting
Stall prevention	22	H500	Stall prevention operation level	0 to 400%	0.1%	120%	110%	273	
	23	H610	Stall prevention operation level compensation factor at double speed	0 to 200%, 9999	0.1%	9999		273	
Multi-speed setting	24 to 27	D304 to D307	Multi-speed setting (4 speed to 7 speed)	0 to 590 Hz, 9999	0.01 Hz	9999		249	
—	28	D300	Multi-speed input compensation selection	0, 1	1	0		249	
—	29	F100	Acceleration/deceleration pattern selection	0 to 3, 6	1	0		219	
—	30	E300	Regenerative function selection	0 to 2, 10, 11, 20, 21, 100 to 102, 110, 111, 120, 121[*10]	1	0		539	
				2, 10, 11, 102, 110, 111[*11]	1	10			
				0, 2, 10, 20, 100, 102, 110, 120[*12]	1	0			
Frequency jump	31	H420	Frequency jump 1A	0 to 590 Hz, 9999	0.01 Hz	9999		272	
	32	H421	Frequency jump 1B	0 to 590 Hz, 9999	0.01 Hz	9999		272	
	33	H422	Frequency jump 2A	0 to 590 Hz, 9999	0.01 Hz	9999		272	
	34	H423	Frequency jump 2B	0 to 590 Hz, 9999	0.01 Hz	9999		272	
	35	H424	Frequency jump 3A	0 to 590 Hz, 9999	0.01 Hz	9999		272	
	36	H425	Frequency jump 3B	0 to 590 Hz, 9999	0.01 Hz	9999		272	
—	37	M000	Speed display	0, 1 to 9998	1	0		286	
Frequency detection	41	M441	Up-to-frequency sensitivity	0 to 100%	0.1%	10%		319	
	42	M442	Output frequency detection	0 to 590 Hz	0.01 Hz	6 Hz		319	
	43	M443	Output frequency detection for reverse rotation	0 to 590 Hz, 9999	0.01 Hz	9999		319	
Second function	44	F020	Second acceleration/ deceleration time	0 to 3600 s	0.1 s	5 s		216	
	45	F021	Second deceleration time	0 to 3600 s, 9999	0.1 s	9999		216	
	46	G010	Second torque boost	0 to 30%, 9999	0.1%	9999		527	
	47	G011	Second V/F (base frequency)	0 to 590 Hz, 9999	0.01 Hz	9999		528	
	48	H600	Second stall prevention operation level	0 to 400%	0.1%	120%	110%	273	
	49	H601	Second stall prevention operation frequency	0 to 590 Hz, 9999	0.01 Hz	0 Hz		273	
	50	M444	Second output frequency detection	0 to 590 Hz	0.01 Hz	30 Hz		319	
	51	H010 C203	Second electronic thermal O/L relay Rated second motor current	0 to 500 A, 9999[*2]	0.01 A[*2]	9999		252, 366, 375	
				0 to 3600 A, 9999[*3]	0.1 A[*3]				

上正科技有限公司
購買、維修 工手服零組件
電話： 03/4869393
Email: service@repairtw.com
Line id: @5500
www.repairtw.com

Function	Pr.	Pr. group	Name	Setting range	Minimum setting increments	Initial value FM	Initial value CA	Refer to page	Customer setting
Monitoring function	52	M100	Operation panel main monitor selection	0, 5 to 14, 17, 18, 20, 23 to 25, 34, 38, 40 to 45, 50 to 57, 61, 62, 64, 67 to 69, 81 to 96, 98, 100	1	0		288, 511	
	54	M300	FM/CA terminal function selection	1 to 3, 5 to 14, 17, 18, 21, 24, 34, 50, 52, 53, 61, 62, 67, 69, 70, 85, 87 to 90, 92, 93, 95, 98	1	1		297	
	55	M040	Frequency monitoring reference	0 to 590 Hz	0.01 Hz	60 Hz	50 Hz	297	
	56	M041	Current monitoring reference	0 to 500 A*2	0.01 A*2	Inverter rated current		297	
				0 to 3600 A*3	0.1 A*3				
Automatic restart	57	A702	Restart coasting time	0, 0.1 to 30 s, 9999	0.1 s	9999		446, 451	
	58	A703	Restart cushion time	0 to 60 s	0.1 s	1 s		446	
—	59	F101	Remote function selection	0 to 3, 11 to 13	1	0		222	
—	60	G030	Energy saving control selection	0, 4, 9	1	0		532	
—	65	H300	Retry selection	0 to 5	1	0		261	
—	66	H611	Stall prevention operation reduction starting frequency	0 to 590 Hz	0.01 Hz	60 Hz	50 Hz	273	
Retry	67	H301	Number of retries at fault occurrence	0 to 10, 101 to 110	1	0		261	
	68	H302	Retry waiting time	0.1 to 600 s	0.1 s	1 s		261	
	69	H303	Retry count display erase	0	1	0		261	
—	70	G107	Parameter for manufacturer setting. Do not set.						
—	71	C100	Applied motor	0 to 6, 13 to 16, 20, 23, 24, 40, 43, 44, 50, 53, 54, 70, 73, 74, 210, 213, 214, 240, 243, 244, 8090, 8093, 8094, 9090, 9093, 9094*10*11	1	0		169, 362, 366, 375	
				0 to 6, 13 to 16, 20, 23, 24, 40, 43, 44, 50, 53, 54, 70, 73, 74, 8090, 8093, 8094, 9090, 9093, 9094*12					
—	72	E600	PWM frequency selection	0 to 15*2	1	2		207	
				0 to 6, 25*3					
—	73	T000	Analog input selection	0 to 7, 10 to 17	1	1		330, 335	
—	74	T002	Input filter time constant	0 to 8	1	1		337	
—	75	—	Reset selection/ Disconnected PU detection/ PUStop selection	0 to 3, 14 to 17, 1000 to 1003, 1014 to 1017*2	1	14		188	
				0 to 3, 14 to 17, 100 to 103, 114 to 117, 1000 to 1003, 1014 to 1017, 1100 to 1103, 1114 to 1117*3					
		E100	Reset selection	0 to 3		0			
		E101	Disconnected PU detection	0, 1					
		E102	PUStop selection			1			
		E107	Reset limit	0*2	1	0			
				0, 1*3					
—	76	M510	Fault code output selection	0 to 2	1	0		327	
—	77	E400	Parameter write selection	0 to 2	1	0		196	

上揚科技有限公司
購買、維修 此手冊零組件
電話: 037-466333
Email: service@epanew.com
Line id: @zh22
www.repanew.com

Function	Pr.	Pr. group	Name	Setting range	Minimum setting increments	Initial value FM	Initial value CA	Refer to page	Customer setting
—	78	D020	Reverse rotation prevention selection	0 to 2	1	0		245	
—	79	D000	Operation mode selection Simple	0 to 4, 6, 7	1	0		228, 237	
Motor constant	80	C101	Motor capacity	0.4 to 55 kW, 9999*2	0.01 kW*2	9999		169, 366, 375	
				0 to 3600 kW, 9999*3	0.1 kW*3				
	81	C102	Number of motor poles	2, 4, 6, 8, 10, 12, 9999	1	9999		169, 366, 375	
	82	C125	Motor excitation current	0 to 500 A, 9999*2	0.01 A*2	9999		366	
				0 to 3600 A, 9999*3	0.1 A*3				
	83	C104	Rated motor voltage	0 to 1000 V	0.1 V	200 V*7		169, 366, 375	
						400 V*8			
	84	C105	Rated motor frequency	10 to 400 Hz, 9999	0.01 Hz	9999		169, 366, 375	
—	85	G201	Excitation current break point	0 to 400 Hz, 9999	0.01 Hz	9999		531	
—	86	G202	Excitation current low-speed scaling factor	0 to 300%, 9999	0.1%	9999		531	
Motor constant	89	G932	Speed control gain (Advanced magnetic flux vector)	0 to 200%, 9999	0.1%	9999		172	
	90	C120	Motor constant (R1)	0 to 50 Ω, 9999*2	0.001 Ω*2	9999		366, 375, 454	
				0 to 400 mΩ, 9999*3	0.01 mΩ*3				
	91	C121	Motor constant (R2)	0 to 50 Ω, 9999*2	0.001 Ω*2	9999		366	
				0 to 400 mΩ, 9999*3	0.01 mΩ*3				
	92	C122	Motor constant (L1)/d-axis inductance (Ld)	0 to 6000 mH, 9999*2	0.1 mH*2	9999		366, 375	
				0 to 400 mH, 9999*3	0.01 mH*3				
	93	C123	Motor constant (L2)/q-axis inductance (Lq)	0 to 6000 mH, 9999*2	0.1 mH*2	9999		366, 375	
				0 to 400 mH, 9999*3	0.01 mH*3				
	94	C124	Motor constant (X)	0 to 100%, 9999	0.1%*2	9999		366	
					0.01%*3				
	95	C111	Online auto tuning selection	0, 1	1	0		382	
	96	C110	Auto tuning setting/status	0, 1, 11, 101	1	0		366, 375, 454	
Adjustable 5 points V/F	100	G040	V/F1 (first frequency)	0 to 590 Hz, 9999	0.01 Hz	9999		533	
	101	G041	V/F1 (first frequency voltage)	0 to 1000 V	0.1 V	0 V		533	
	102	G042	V/F2 (second frequency)	0 to 590 Hz, 9999	0.01 Hz	9999		533	
	103	G043	V/F2 (second frequency voltage)	0 to 1000 V	0.1 V	0 V		533	
	104	G044	V/F3 (third frequency)	0 to 590 Hz, 9999	0.01 Hz	9999		533	
	105	G045	V/F3 (third frequency voltage)	0 to 1000 V	0.1 V	0 V		533	
	106	G046	V/F4 (fourth frequency)	0 to 590 Hz, 9999	0.01 Hz	9999		533	
	107	G047	V/F4 (fourth frequency voltage)	0 to 1000 V	0.1 V	0 V		533	
	108	G048	V/F5 (fifth frequency)	0 to 590 Hz, 9999	0.01 Hz	9999		533	
	109	G049	V/F5 (fifth frequency voltage)	0 to 1000 V	0.1 V	0 V		533	
—	111	F031	Check valve deceleration time	0 to 3600 s, 9999	0.1 s	9999		439	

上正科技有限公司
購買、維修此產品零組件
電話： 037-466333
Email: service@repairtw.com
Line id: @3333
www.repairtw.com

Function	Pr.	Pr. group	Name	Setting range	Minimum setting increments	Initial value FM	Initial value CA	Refer to page	Customer setting
PU connector communication	117	N020	PU communication station number	0 to 31	1	0		482	
	118	N021	PU communication speed	48, 96, 192, 384, 576, 768, 1152	1	192		482	
	119	—	PU communication stop bit length / data length	0, 1, 10, 11	1	1		482	
		N022	PU communication data length	0, 1		0			
		N023	PU communication stop bit length	0, 1		1			
	120	N024	PU communication parity check	0 to 2	1	2		482	
	121	N025	PU communication retry count	0 to 10, 9999	1	1		482	
	122	N026	PU communication check time interval	0, 0.1 to 999.8 s, 9999	0.1 s	9999		482	
	123	N027	PU communication waiting time setting	0 to 150 ms, 9999	1 ms	9999		482	
	124	N028	PU communication CR/LF selection	0 to 2	1	1		482	
—	125	T022	Terminal 2 frequency setting gain frequency Simple	0 to 590 Hz	0.01 Hz	60 Hz	50 Hz	339	
—	126	T042	Terminal 4 frequency setting gain frequency Simple	0 to 590 Hz	0.01 Hz	60 Hz	50 Hz	339	
PID operation	127	A612	PID control automatic switchover frequency	0 to 590 Hz, 9999	0.01 Hz	9999		401	
	128	A610	PID action selection	0, 10, 11, 20, 21, 50, 51, 60, 61, 70, 71, 80, 81, 90, 91, 100, 101, 1000, 1001, 1010, 1011, 2000, 2001, 2010, 2011	1	0		401	
	129	A613	PID proportional band	0.1 to 1000%, 9999	0.1%	100%		401	
	130	A614	PID integral time	0.1 to 3600 s, 9999	0.1 s	1 s		401	
	131	A601	PID upper limit	0 to 100%, 9999	0.1%	9999		401	
	132	A602	PID lower limit	0 to 100%, 9999	0.1%	9999		401	
	133	A611	PID action set point	0 to 100%, 9999	0.01%	9999		401	
	134	A615	PID differential time	0.01 to 10 s, 9999	0.01 s	9999		401	
Bypass	135	A000	Electronic bypass sequence selection	0, 1	1	0		387	
	136	A001	MC switchover interlock time	0 to 100 s	0.1 s	1 s		387	
	137	A002	Start waiting time	0 to 100 s	0.1 s	0.5 s		387	
	138	A003	Bypass selection at a fault	0, 1	1	0		387	
	139	A004	Automatic switchover frequency from inverter to bypass operation	0 to 60 Hz, 9999	0.01 Hz	9999		387	
Backlash measure	140	F200	Backlash acceleration stopping frequency	0 to 590 Hz	0.01 Hz	1 Hz		219	
	141	F201	Backlash acceleration stopping time	0 to 360 s	0.1 s	0.5 s		219	
	142	F202	Backlash deceleration stopping frequency	0 to 590 Hz	0.01 Hz	1 Hz		219	
	143	F203	Backlash deceleration stopping time	0 to 360 s	0.1 s	0.5 s		219	
—	144	M002	Speed setting switchover	0, 2, 4, 6, 8, 10, 12, 102, 104, 106, 108, 110, 112	1	4		286	
PU	145	E103	PU display language selection	0 to 7	1	—		191	
—	147	F022	Acceleration/deceleration time switching frequency	0 to 590 Hz, 9999	0.01 Hz	9999		216	

長流科技有限公司
購買、維修 PLC 伺服馬達
電話： 037-462833
Email: service@repairtw.com
Line id: @zzz
www.repairtw.com

Function	Pr.	Pr. group	Name	Setting range	Minimum setting increments	Initial value FM	Initial value CA	Refer to page	Customer setting
Current detection	148	H620	Stall prevention level at 0 V input	0 to 400%	0.1%	120%	110%	273	
	149	H621	Stall prevention level at 10 V input	0 to 400%	0.1%	150%	120%	273	
	150	M460	Output current detection level	0 to 400%	0.1%	120%	110%	321	
	151	M461	Output current detection signal delay time	0 to 10 s	0.1 s	0 s		321	
	152	M462	Zero current detection level	0 to 400%	0.1%	5%		321	
	153	M463	Zero current detection time	0 to 10 s	0.01 s	0.5 s		321	
—	154	H631	Voltage reduction selection during stall prevention operation	0, 1, 10, 11	1	1		273	
—	155	T730	RT signal function validity condition selection	0, 10	1	0		358	
—	156	H501	Stall prevention operation selection	0 to 31, 100, 101	1	0		273	
—	157	M430	OL signal output timer	0 to 25 s, 9999	0.1 s	0 s		273	
—	158	M301	AM terminal function selection	1 to 3, 5 to 14, 17, 18, 21, 24, 34, 50, 52 to 54, 61, 62, 67, 69, 70, 86 to 96, 98	1	1		297	
—	159	A005	Automatic switchover frequency range from bypass to inverter operation	0 to 10 Hz, 9999	0.01 Hz	9999		387	
—	160	E440	User group read selection *Simple*	0, 1, 9999	1	9999	0	204	
—	161	E200	Frequency setting/key lock operation selection	0, 1, 10, 11	1	0		192	
Automatic restart	162	A700	Automatic restart after instantaneous power failure selection	0 to 3, 10 to 13	1	0		446, 451, 454	
	163	A704	First cushion time for restart	0 to 20 s	0.1 s	0 s		446	
	164	A705	First cushion voltage for restart	0 to 100%	0.1%	0%		446	
	165	A710	Stall prevention operation level for restart	0 to 400%	0.1%	120%	110%	446	
Current detection	166	M433	Output current detection signal retention time	0 to 10 s, 9999	0.1 s	0.1 s		321	
	167	M464	Output current detection operation selection	0, 1, 10, 11	1	0		321	
—	168	E000	Parameter for manufacturer setting. Do not set.						
		E080							
—	169	E001							
		E081							
Cumulative monitor	170	M020	Watt-hour meter clear	0, 10, 9999	1	9999		288	
	171	M030	Operation hour meter clear	0, 9999	1	9999		288	
User group	172	E441	User group registered display/batch clear	9999, (0 to 16)	1	0		204	
	173	E442	User group registration	0 to 1999, 9999	1	9999		204	
	174	E443	User group clear	0 to 1999, 9999	1	9999		204	

上正科技有限公司
購買、維修、此手冊零組件
電話： 037-466333
Email: service@repairtw.com
Line Id: @3333
www.repairtw.com

Function	Pr.	Pr. group	Name	Setting range	Minimum setting increments	Initial value FM	Initial value CA	Refer to page	Customer setting
Input terminal function assignment	178	T700	STF terminal function selection	0 to 8, 10 to 14, 16, 18, 24, 25, 28, 37 to 40, 46 to 48, 50, 51, 57, 58, 60, 62, 64 to 67, 70 to 73, 77 to 81, 84, 94 to 98, 9999	1	60		355	
	179	T701	STR terminal function selection	0 to 8, 10 to 14, 16, 18, 24, 25, 28, 37 to 40, 46 to 48, 50, 51, 57, 58, 61, 62, 64 to 67, 70 to 73, 77 to 81, 84, 94 to 98, 9999	1	61		355	
	180	T702	RL terminal function selection	0 to 8, 10 to 14, 16, 18, 24, 25, 28, 37 to 40, 46 to 48, 50, 51, 57, 58, 62, 64 to 67, 70 to 73, 77 to 81, 84, 94 to 98, 9999	1	0		355	
	181	T703	RM terminal function selection		1	1		355	
	182	T704	RH terminal function selection		1	2		355	
	183	T705	RT terminal function selection		1	3		355	
	184	T706	AU terminal function selection		1	4		355	
	185	T707	JOG terminal function selection		1	5		355	
	186	T708	CS terminal function selection		1	9999		355	
	187	T709	MRS terminal function selection		1	24*10*12	10*11	355	
	188	T710	STOP terminal function selection		1	25		355	
	189	T711	RES terminal function selection		1	62		355	

上正科技有限公司
購買、維修 此手冊零組件
電話： 037-466333
Email: service@repairtw.com
Line id: @zzzz
www.repairtw.com

Function	Pr.	Pr. group	Name	Setting range	Minimum setting increments	Initial value FM	Initial value CA	Refer to page	Customer setting
Output terminal function assignment	190	M400	RUN terminal function selection	0 to 5, 7, 8, 10 to 19, 25, 26, 35, 39 to 42, 45 to 54, 57, 64 to 68, 70 to 80, 82, 85, 90 to 96, 98 to 105, 107, 108, 110 to 116, 125, 126, 135, 139 to 142, 145 to 154, 157, 164 to 168, 170 to 180, 182, 185, 190 to 196, 198 to 208, 211 to 213, 215, 217 to 220, 226, 228 to 230, 300 to 308, 311 to 313, 315, 317 to 320, 326, 328 to 330, 9999	1	0		312	
	191	M401	SU terminal function selection		1	1		312	
	192	M402	IPF terminal function selection		1	2*10*12	9999*11	312	
	193	M403	OL terminal function selection		1	3		312	
	194	M404	FU terminal function selection		1	4		312	
	195	M405	ABC1 terminal function selection	0 to 5, 7, 8, 10 to 19, 25, 26, 35, 39 to 42, 45 to 54, 57, 64 to 68, 70 to 80, 82, 85, 90, 91, 94 to 96, 98 to 105, 107, 108, 110 to 116, 125, 126, 135, 139 to 142, 145 to 154, 157, 164 to 168, 170 to 180, 182, 185, 190, 191, 194 to 196, 198 to 208, 211 to 213, 215, 217 to 220, 226, 228 to 230, 300 to 308, 311 to 313, 315, 317 to 320, 326, 328 to 330, 9999	1	99		312	
	196	M406	ABC2 terminal function selection		1	9999		312	
Multi-speed setting	232 to 239	D308 to D315	Multi-speed setting (8 speed to 15 speed)	0 to 590 Hz, 9999	0.01 Hz	9999		249	
—	240	E601	Soft-PWM operation selection	0, 1	1	1		207	
—	241	M043	Analog input display unit switchover	0, 1	1	0		339	
—	242	T021	Terminal 1 added compensation amount (terminal 2)	0 to 100%	0.1%	100%		335	
—	243	T041	Terminal 1 added compensation amount (terminal 4)	0 to 100%	0.1%	75%		335	
—	244	H100	Cooling fan operation selection	0, 1, 101 to 105	1	1		258	
Slip compensation	245	G203	Rated slip	0 to 50%, 9999	0.01%	9999		548	
	246	G204	Slip compensation time constant	0.01 to 10 s	0.01 s	0.5 s		548	
	247	G205	Constant output range slip compensation selection	0, 9999	1	9999		548	
—	248	A006	Self power management selection	0 to 2	1	0		393	
—	249	H101	Earth (ground) fault detection at start	0, 1	1	0		259	

上正科技有限公司
購買、維修三菱變頻器組件
電話： 03-4806333
Email: service@repairtw.com
Line id: @zzzz
www.repairtw.com

Function	Pr.	Pr. group	Name	Setting range	Minimum setting increments	Initial value FM	Initial value CA	Refer to page	Customer setting
—	250	G106	Stop selection	0 to 100 s, 1000 to 1100 s, 8888, 9999	0.1 s	9999		538	
—	251	H200	Output phase loss protection selection	0, 1	1	1		260	
Frequency compensation	252	T050	Override bias	0 to 200%	0.1%	50%		335	
	253	T051	Override gain	0 to 200%	0.1%	150%		335	
—	254	A007	Main circuit power OFF waiting time	1 to 3600 s, 9999	1 s	600 s		393	
Life check	255	E700	Life alarm status display	(0 to 15)	1	0		208	
	256*14	E701	Inrush current limit circuit life display	(0 to 100%)	1%	100%		208	
	257	E702	Control circuit capacitor life display	(0 to 100%)	1%	100%		208	
	258*14	E703	Main circuit capacitor life display	(0 to 100%)	1%	100%		208	
	259*14	E704	Main circuit capacitor life measuring	0, 1	1	0		208	
—	260	E602	PWM frequency automatic switchover	0, 1	1	1		207	
Power failure stop	261	A730	Power failure stop selection	0 to 2, 11, 12, 21, 22	1	0		458	
	262	A731	Subtracted frequency at deceleration start	0 to 20 Hz	0.01 Hz	3 Hz		458	
	263	A732	Subtraction starting frequency	0 to 590 Hz, 9999	0.01 Hz	60 Hz	50 Hz	458	
	264	A733	Power-failure deceleration time 1	0 to 3600 s	0.1 s	5 s		458	
	265	A734	Power-failure deceleration time 2	0 to 3600 s, 9999	0.1 s	9999		458	
	266	A735	Power failure deceleration time switchover frequency	0 to 590 Hz	0.01 Hz	60 Hz	50 Hz	458	
—	267	T001	Terminal 4 input selection	0 to 2	1	0		330	
—	268	M022	Monitor decimal digits selection	0, 1, 9999	1	9999		288	
—	269	E023	Parameter for manufacturer setting. Do not set.						
—	289	M431	Inverter output terminal filter	5 to 50 ms, 9999	1 ms	9999		312	
—	290	M044	Monitor negative output selection	0 to 7	1	0		288, 297	
—	291	D100	Pulse train I/O selection	[FM type] 0, 1, 10, 11, 20, 21, 100 [CA type] 0, 1	1	0		245, 297	
—	294	A785	UV avoidance voltage gain	0 to 200%	0.1%	100%		458	
—	295	E201	Frequency change increment amount setting	0, 0.01, 0.1, 1, 10,	0.01	0		193	
Password	296	E410	Password lock level	0 to 6, 99, 100 to 106, 199, 9999	1	9999		198	
	297	E411	Password lock/unlock	(0 to 5), 1000 to 9998, 9999	1	9999		198	
—	298	A711	Frequency search gain	0 to 32767, 9999	1	9999		366, 454	
—	299	A701	Rotation direction detection selection at restarting	0, 1, 9999	1	9999		446	

上正科技有限公司
購買、維修、此手冊零組件
電話：037-466333
Email: service@repairtw.com
Line id: @zzzz
www.repairtw.com

Function	Pr.	Pr. group	Name	Setting range	Minimum setting increments	Initial value FM	Initial value CA	Refer to page	Customer setting
PLC	313*15	M410	DO0 output selection	0 to 5, 7, 8, 10 to 19, 25, 26, 35, 39 to 42, 45 to 54, 57, 64 to 66, 68, 70 to 80, 85 to 96, 98 to 105, 107, 108, 110 to 116, 125, 126, 135, 139 to 142, 145 to 154, 157, 164 to 166, 168, 170 to 180, 185 to 196, 198 to 208, 211 to 213, 215, 217 to 220, 226, 228 to 230, 300 to 308, 311 to 313, 315, 317 to 320, 326, 328 to 330, 9999	1	9999		312	
	314*15	M411	DO1 output selection		1	9999		312	
	315*15	M412	DO2 output selection		1	9999		312	
	316*15	M413	DO3 output selection		1	9999		312	
	317*15	M414	DO4 output selection		1	9999		312	
	318*15	M415	DO5 output selection		1	9999		312	
	319*15	M416	DO6 output selection		1	9999		312	
	320*15	M420	RA1 output selection	0 to 5, 7, 8, 10 to 19, 25, 26, 35, 39 to 42, 45 to 54, 57, 64 to 66, 68, 70 to 80, 85 to 91, 94 to 96, 98, 99, 200 to 208, 211 to 213, 215, 217 to 220, 226, 228 to 230, 9999	1	9999		312	
	321*15	M421	RA2 output selection		1	9999		312	
	322*15	M422	RA3 output selection		1	9999		312	
RS-485 communication	331	N030	RS-485 communication station number	0 to 31 (0 to 247)	1	0		482, 511	
	332	N031	RS-485 communication speed	3, 6, 12, 24, 48, 96, 192, 384, 576, 768, 1152	1	96		482, 511	
	333	—	RS-485 communication stop bit length / data length	0, 1, 10, 11	1	1		482	
		N032	RS-485 communication data length	0, 1	1	0			
		N033	RS-485 communication stop bit length	0, 1	1	1			
	334	N034	RS-485 communication parity check selection	0 to 2	1	2		482	
	335	N035	RS-485 communication retry count	0 to 10, 9999	1	1		482	
	336	N036	RS-485 communication check time interval	0 to 999.8 s, 9999	0.1 s	0 s		482	
	337	N037	RS-485 communication waiting time setting	0 to 150 ms, 9999	1 ms	9999		482	
	338	D010	Communication operation command source	0, 1	1	0		239	
	339	D011	Communication speed command source	0 to 2	1	0		239	
	340	D001	Communication startup mode selection	0 to 2, 10, 12	1	0		237	
	341	N038	RS-485 communication CR/LF selection	0 to 2	1	1		482	
	342	N001	Communication EEPROM write selection	0, 1	1	0		478	
	343	N080	Communication error count	—	1	0		498	
—	374	H800	Overspeed detection level	0 to 590 Hz, 9999	0.01 Hz	9999		285	
Pulse train input	384	D101	Input pulse division scaling factor	0 to 250	1	0		245	
	385	D110	Frequency for zero input pulse	0 to 590 Hz	0.01 Hz	0 Hz		245	
	386	D111	Frequency for maximum input pulse	0 to 590 Hz	0.01 Hz	60 Hz	50 Hz	245	

上正科技有限公司
購買、維修電子零組件
電話： 037-466333
Email: service@repairtw.com
Line id: @zzzz
www.repairtw.com

Function	Pr.	Pr. group	Name	Setting range	Minimum setting increments	Initial value FM	Initial value CA	Refer to page	Customer setting
—	390	N054	% setting reference frequency	1 to 590 Hz	0.01 Hz	60 Hz	50 Hz	511	
PLC	414	A800	PLC function operation selection	0 to 2, 11, 12	1	0		462	
	415	A801	Inverter operation lock mode setting	0, 1	1	0		462	
	416	A802	Pre-scale function selection	0 to 5	1	0		462	
	417	A803	Pre-scale setting value	0 to 32767	1	1		462	
Second motor constant	450	C200	Second applied motor	0, 1, 3 to 6, 13 to 16, 20, 23, 24, 40, 43, 44, 50, 53, 54, 70, 73, 74, 210, 213, 214, 240, 243, 244, 8090, 8093, 8094, 9090, 9093, 9094, 9999	1	9999		362	
	453	C201	Second motor capacity	0.4 to 55 kW, 9999[*2] 0 to 3600 kW, 9999[*3]	0.01 kW[*2] 0.1 kW[*3]	9999		366, 375	
	454	C202	Number of second motor poles	2, 4, 6, 8, 10, 12, 9999	1	9999		366, 375	
	455	C225	Second motor excitation current	0 to 500 A, 9999[*2] 0 to 3600 A, 9999[*3]	0.01 A[*2] 0.1 A[*3]	9999		366	
	456	C204	Rated second motor voltage	0 to 1000 V	0.1 V	200 V[*7] 400 V[*8]		366, 375	
	457	C205	Rated second motor frequency	10 to 400 Hz, 9999	0.01 Hz	9999		366, 375	
	458	C220	Second motor constant (R1)	0 to 50 Ω, 9999[*2] 0 to 400 mΩ, 9999[*3]	0.001 Ω[*2] 0.01 mΩ[*3]	9999		366, 375, 454	
	459	C221	Second motor constant (R2)	0 to 50 Ω, 9999[*2] 0 to 400 mΩ, 9999[*3]	0.001 Ω[*2] 0.01 mΩ[*3]	9999		366	
	460	C222	Second motor constant (L1) / d-axis inductance (Ld)	0 to 6000 mH, 9999[*2] 0 to 400 mH, 9999[*3]	0.1 mH[*2] 0.01 mH[*3]	9999		366, 375	
	461	C223	Second motor constant (L2) / q-axis inductance (Lq)	0 to 6000 mH, 9999[*2] 0 to 400 mH, 9999[*3]	0.1 mH[*2] 0.01 mH[*3]	9999		366, 375	
	462	C224	Second motor constant (X)	0 to 100%, 9999	0.1%[*2] 0.01%[*3]	9999		366	
	463	C210	Second motor auto tuning setting/status	0, 1, 11, 101	1	0		366, 375, 454	
Remote output	495	M500	Remote output selection	0, 1, 10, 11	1	0		324	
	496	M501	Remote output data 1	0 to 4095	1	0		324	
	497	M502	Remote output data 2	0 to 4095	1	0		324	
—	498	A804	PLC function flash memory clear	0, 9696 (0 to 9999)	1	0		462	
—	502	N013	Stop mode selection at communication error	0 to 4	1	0		478	
Maintenance	503	E710	Maintenance timer 1	0 (1 to 9998)	1	0		212	
	504	E711	Maintenance timer 1 warning output set time	0 to 9998, 9999	1	9999		212	
—	505	M001	Speed setting reference	1 to 590 Hz	0.01 Hz	60 Hz	50 Hz	286	
—	514[*14]	H324	Emergency drive dedicated waiting time	0.1 to 600 s, 9999	0.1 s	9999		263	
—	515[*14]	H322	Emergency drive dedicated retry count	1 to 200, 9999	1	1		263	

上正科技有限公司
購買、維修、此手冊零組件
電話： 037-455333
Email: service@repairtw.com
Line id: @zzz
www.repairtw.com

Function	Pr.	Pr. group	Name	Setting range	Minimum setting increments	Initial value FM	Initial value CA	Refer to page	Customer setting
—	522	G105	Output stop frequency	0 to 590 Hz, 9999	0.01 Hz	9999		536	
—	523[*14]	H320	Emergency drive mode selection	100, 111, 112, 121 to 124, 200, 211, 212, 221 to 224, 300, 311, 312, 321 to 324, 400, 411, 412, 421 to 424, 9999	1	9999		263	
—	524[*14]	H321	Emergency drive running speed	0 to 590 Hz, 9999	0.01 Hz	9999		263	
—	539	N002	MODBUS RTU communication check time interval	0 to 999.8 s, 9999	0.1 s	9999		498	
USB	547	N040	USB communication station number	0 to 31	1	0		523	
	548	N041	USB communication check time interval	0 to 999.8 s, 9999	0.1 s	9999		523	
Communication	549	N000	Protocol selection	0, 1, 2	1	0		478, 511	
	550	D012	NET mode operation command source selection	0, 1, 9999	1	9999		239	
	551	D013	PU mode operation command source selection	1 to 3, 9999	1	9999		239	
—	552	H429	Frequency jump range	0 to 30 Hz, 9999	0.01 Hz	9999		272	
PID control	553	A603	PID deviation limit	0 to 100%, 9999	0.1%	9999		401	
	554	A604	PID signal operation selection	0 to 7, 10 to 17	1	0		401	
Current average value monitoring	555	E720	Current average time	0.1 to 1 s	0.1 s	1 s		213	
	556	E721	Data output mask time	0 to 20 s	0.1 s	0 s		213	
	557	E722	Current average value monitor signal output reference current	0 to 500 A[*2] 0 to 3600 A[*3]	0.01 A[*2] 0.1 A[*3]	Inverter rated current		213	
—	560	A712	Second frequency search gain	0 to 32767, 9999	1	9999		366, 454	
—	561	H020	PTC thermistor protection level	0.5 to 30 kΩ, 9999	0.01 kΩ	9999		252	
—	563	M021	Energization time carrying-over times	(0 to 65535)	1	0		288	
—	564	M031	Operating time carrying-over times	(0 to 65535)	1	0		288	
—	565	G301	Second motor excitation current break point	0 to 400 Hz, 9999	0.01 Hz	9999		531	
—	566	G302	Second motor excitation current low-speed scaling factor	0 to 300%, 9999	0.1%	9999		531	
Second motor constant	569	G942	Second motor speed control gain	0 to 200%, 9999	0.1%	9999		172	

上正科技有限公司
購買、維修此手冊零組件
電話： 037-466333
Email: service@repairtw.com
Line id: @zzzz
www.repairtw.com

Function	Pr.	Pr. group	Name	Setting range	Minimum setting increments	Initial value FM	Initial value CA	Refer to page	Customer setting
Multiple rating	570[*13]	E301	Multiple rating setting	0, 1	1	1	0	194	
—	571	F103	Holding time at a start	0 to 10 s, 9999	0.1 s	9999		225	
—	573	A680 T052	4 mA input check selection	1, 4, 9999	1	9999		350	
—	574	C211	Second motor online auto tuning	0, 1	1	0		382	
PID control	575	A621	Output interruption detection time	0 to 3600 s, 9999	0.1 s	1 s		401	
	576	A622	Output interruption detection level	0 to 590 Hz	0.01 Hz	0 Hz		401	
	577	A623	Output interruption cancel level	900 to 1100%	0.1%	1000%		401	
Multi-pump function	578	A400	Auxiliary motor operation selection	0 to 3	1	0		430	
	579	A401	Motor connection function selection	0 to 3	1	0		430	
	580	A402	MC switchover interlock time (multi-pump)	0 to 100 s	0.1 s	1 s		430	
	581	A403	Start waiting time (multi-pump)	0 to 100 s	0.1 s	1 s		430	
	582	A404	Auxiliary motor connection-time deceleration time	0 to 3600 s, 9999	0.1 s	1 s		430	
	583	A405	Auxiliary motor disconnection-time acceleration time	0 to 3600 s, 9999	0.1 s	1 s		430	
	584	A406	Auxiliary motor 1 starting frequency	0 to 590 Hz	0.01 Hz	60 Hz	50 Hz	430	
	585	A407	Auxiliary motor 2 starting frequency	0 to 590 Hz	0.01 Hz	60 Hz	50 Hz	430	
	586	A408	Auxiliary motor 3 starting frequency	0 to 590 Hz	0.01 Hz	60 Hz	50 Hz	430	
	587	A409	Auxiliary motor 1 stopping frequency	0 to 590 Hz	0.01 Hz	0 Hz		430	
	588	A410	Auxiliary motor 2 stopping frequency	0 to 590 Hz	0.01 Hz	0 Hz		430	
	589	A411	Auxiliary motor 3 stopping frequency	0 to 590 Hz	0.01 Hz	0 Hz		430	
	590	A412	Auxiliary motor start detection time	0 to 3600 s	0.1 s	5 s		430	
	591	A413	Auxiliary motor stop detection time	0 to 3600 s	0.1 s	5 s		430	
Traverse	592	A300	Traverse function selection	0 to 2	1	0		396	
	593	A301	Maximum amplitude amount	0 to 25%	0.1%	10%		396	
	594	A302	Amplitude compensation amount during deceleration	0 to 50%	0.1%	10%		396	
	595	A303	Amplitude compensation amount during acceleration	0 to 50%	0.1%	10%		396	
	596	A304	Amplitude acceleration time	0.1 to 3600 s	0.1 s	5 s		396	
	597	A305	Amplitude deceleration time	0.1 to 3600 s	0.1 s	5 s		396	
—	598	H102	Undervoltage level	175 to 215 VDC[*7]/350 to 430 VDC[*8], 9999	0.1 V	9999		260	
—	599	T721	X10 terminal input selection	0, 1	1	0[*10*12] 1[*11]		539	

科技有限公司
購買、維修 此手冊零組件
電話： 037-466333
Email: service@repairtw.com
Line id: @zzzz
www.repairtw.com

Function	Pr.	Pr. group	Name	Setting range	Minimum setting increments	Initial value FM	Initial value CA	Refer to page	Customer setting
Electronic thermal O/L relay	600	H001	First free thermal reduction frequency 1	0 to 590 Hz, 9999	0.01 Hz	9999		252	
	601	H002	First free thermal reduction ratio 1	1 to 100%	1%	100%		252	
	602	H003	First free thermal reduction frequency 2	0 to 590 Hz, 9999	0.01 Hz	9999		252	
	603	H004	First free thermal reduction ratio 2	1 to 100%	1%	100%		252	
	604	H005	First free thermal reduction frequency 3	0 to 590 Hz, 9999	0.01 Hz	9999		252	
—	606	T722	Power failure stop external signal input selection	0, 1	1	1		458	
—	607	H006	Motor permissible load level	110 to 250%	1%	150%		252	
—	608	H016	Second motor permissible load level	110 to 250%, 9999	1%	9999		252	
PID control	609	A624	PID set point/deviation input selection	1 to 5	1	2		401	
	610	A625	PID measured value input selection	1 to 5, 101 to 105	1	3		401	
—	611	F003	Acceleration time at a restart	0 to 3600 s, 9999	0.1 s	9999		446, 451	
—	617	G080	Reverse rotation excitation current low-speed scaling factor	0 to 300%, 9999	0.1%	9999		531	
Speed smoothing control	653	G410	Speed smoothing control	0 to 200%	0.1%	0%		549	
	654	G411	Speed smoothing cutoff frequency	0 to 120 Hz	0.01 Hz	20 Hz		549	
Analog remote output function	655	M530	Analog remote output selection	0, 1, 10, 11	1	0		325	
	656	M531	Analog remote output 1	800 to 1200%	0.1%	1000%		325	
	657	M532	Analog remote output 2	800 to 1200%	0.1%	1000%		325	
	658	M533	Analog remote output 3	800 to 1200%	0.1%	1000%		325	
	659	M534	Analog remote output 4	800 to 1200%	0.1%	1000%		325	
Increased magnetic excitation deceleration	660	G130	Increased magnetic excitation deceleration operation selection	0, 1	1	0		547	
	661	G131	Magnetic excitation increase rate	0 to 40%, 9999	0.1%	9999		547	
	662	G132	Increased magnetic excitation current level	0 to 300%	0.1%	100%		547	
—	663	M060	Control circuit temperature signal output level	0 to 100°C	1°C	0°C		329	
—	665	G125	Regeneration avoidance frequency gain	0 to 200%	0.1%	100%		545	
—	668	A786	Power failure stop frequency gain	0 to 200%	0.1%	100%		458	
—	673	G060	SF-PR slip amount adjustment operation selection	2 to 4, 6, 9999	1	9999		534	

上正科技有限公司
購買、維修 此手冊零組件
電話： 037456333
Email: service@repairtw.com
Line id: @zzzz
www.repairtw.com

Function	Pr.	Pr. group	Name	Setting range	Minimum setting increments	Initial value FM	Initial value CA	Refer to page	Customer setting
—	674	G061	SF-PR slip amount adjustment gain	0 to 500%	0.1%	100%		534	
—	675	A805	User parameter auto storage function selection	1, 9999	1	9999		462	
—	684	C000	Tuning data unit switchover	0, 1	1	0		366, 375	
Maintenance	686	E712	Maintenance timer 2	0 (1 to 9998)	1	0		212	
	687	E713	Maintenance timer 2 warning output set time	0 to 9998, 9999	1	9999		212	
	688	E714	Maintenance timer 3	0 (1 to 9998)	1	0		212	
	689	E715	Maintenance timer 3 warning output set time	0 to 9998, 9999	1	9999		212	
Electronic thermal O/L relay	692	H011	Second free thermal reduction frequency 1	0 to 590 Hz, 9999	0.01 Hz	9999		252	
	693	H012	Second free thermal reduction ratio 1	1 to 100%	1%	100%		252	
	694	H013	Second free thermal reduction frequency 2	0 to 590 Hz, 9999	0.01 Hz	9999		252	
	695	H014	Second free thermal reduction ratio 2	1 to 100%	1%	100%		252	
	696	H015	Second free thermal reduction frequency 3	0 to 590 Hz, 9999	0.01 Hz	9999		252	
—	699	T740	Input terminal filter	5 to 50 ms, 9999	1 ms	9999		355	
Motor constant	702	C106	Maximum motor frequency	0 to 400 Hz, 9999	0.01 Hz	9999		375	
	706	C130	Induced voltage constant (phi f)	0 to 5000 mV (rad/s), 9999	0.1 mV (rad/s)	9999		375	
	707	C107	Motor inertia (integer)	10 to 999, 9999	1	9999		375	
	711	C131	Motor Ld decay ratio	0 to 100%, 9999	0.1%	9999		375	
	712	C132	Motor Lq decay ratio	0 to 100%, 9999	0.1%	9999		375	
	717	C182	Starting resistance tuning compensation	0 to 200%, 9999	0.1%	9999		375	
	721	C185	Starting magnetic pole position detection pulse width	0 to 6000 μs, 10000 to 16000 μs, 9999	1 μs	9999		375	
	724	C108	Motor inertia (exponent)	0 to 7, 9999	1	9999		375	
	725	C133	Motor protection current level	100 to 500%, 9999	0.1%	9999		375	
BACnet MS/TP protocol	726	N050	Auto Baudrate/Max Master	0 to 255	1	255		511	
	727	N051	Max Info Frames	1 to 255	1	1		511	
	728	N052	Device instance number (Upper 3 digits)	0 to 419 (0 to 418)	1	0		511	
	729	N053	Device instance number (Lower 4 digits)	0 to 9999 (0 to 4302)	1	0		511	
Motor constant	738	C230	Second motor induced voltage constant (phi f)	0 to 5000 mV (rad/s), 9999	0.1 mV (rad/s)	9999		375	
	739	C231	Second motor Ld decay ratio	0 to 100%, 9999	0.1%	9999		375	
	740	C232	Second motor Lq decay ratio	0 to 100%, 9999	0.1%	9999		375	
	741	C282	Second starting resistance tuning compensation	0 to 200%, 9999	0.1%	9999		375	
	742	C285	Second motor magnetic pole detection pulse width	0 to 6000 μs, 10000 to 16000 μs, 9999	1 μs	9999		375	
	743	C206	Second motor maximum frequency	0 to 400 Hz, 9999	0.01 Hz	9999		375	
	744	C207	Second motor inertia (integer)	10 to 999, 9999	1	9999		375	
	745	C208	Second motor inertia (exponent)	0 to 7, 9999	1	9999		375	
	746	C233	Second motor protection current level	100 to 500%, 9999	0.1%	9999		375	

上正科技有限公司
購買、維修、出租、進口機電組件
電話: 037-466333
Email: service@repairtw.com
Line id: @z222
www.repairtw.com

Function	Pr.	Pr. group	Name	Setting range	Minimum setting increments	Initial value FM	Initial value CA	Refer to page	Customer setting
PID control	753	A650	Second PID action selection	0, 10, 11, 20, 21, 50, 51, 60, 61, 70, 71, 80, 81, 90, 91, 100, 101, 1000, 1001, 1010, 1011, 2000, 2001, 2010, 2011	1	0		401	
	754	A652	Second PID control automatic switchover frequency	0 to 590 Hz, 9999	0.01 Hz	9999		401	
	755	A651	Second PID action set point	0 to 100%, 9999	0.01%	9999		401	
	756	A653	Second PID proportional band	0.1 to 1000%, 9999	0.1%	100%		401	
	757	A654	Second PID integral time	0.1 to 3600 s, 9999	0.1 s	1 s		401	
	758	A655	Second PID differential time	0.01 to 10 s, 9999	0.01 s	9999		401	
	759	A600	PID unit selection	0 to 43, 9999	1	9999		423	
PID Pre-charge	760	A616	Pre-charge fault selection	0, 1	1	0		425	
	761	A617	Pre-charge ending level	0 to 100%, 9999	0.1%	9999		425	
	762	A618	Pre-charge ending time	0 to 3600 s, 9999	0.1 s	9999		425	
	763	A619	Pre-charge upper detection level	0 to 100%, 9999	0.1%	9999		425	
	764	A620	Pre-charge time limit	0 to 3600 s, 9999	0.1 s	9999		425	
	765	A656	Second pre-charge fault selection	0, 1	1	0		425	
	766	A657	Second pre-charge ending level	0 to 100%, 9999	0.1%	9999		425	
	767	A658	Second pre-charge ending time	0 to 3600 s, 9999	0.1 s	9999		425	
	768	A659	Second pre-charge upper detection level	0 to 100%, 9999	0.1%	9999		425	
	769	A660	Second pre-charge time limit	0 to 3600 s, 9999	0.1 s	9999		425	
Monitoring function	774	M101	Operation panel monitor selection 1	1 to 3, 5 to 14, 17, 18, 20, 23 to 25, 34, 38, 40 to 45, 50 to 57, 61, 62, 64, 67 to 69, 81 to 96, 98, 100, 9999	1	9999		288, 511	
	775	M102	Operation panel monitor selection 2		1	9999		288, 511	
	776	M103	Operation panel monitor selection 3		1	9999		288, 511	
—	777	A681 / T053	4 mA input fault operation frequency	0 to 590 Hz, 9999	0.01 Hz	9999		350	
—	778	A682 / T054	4 mA input check filter	0 to 10 s	0.01 s	0 s		350	
—	779	N014	Operation frequency during communication error	0 to 590 Hz, 9999	0.01 Hz	9999		478	
—	791	F070	Acceleration time in low-speed range	0 to 3600 s, 9999	0.1 s	9999		216	
—	792	F071	Deceleration time in low-speed range	0 to 3600 s, 9999	0.1 s	9999		216	
—	799	M520	Pulse increment setting for output power	0.1, 1, 10, 100, 1000 kWh	0.1 kWh	1 kWh		328	
—	800	G200	Control method selection	9, 20	1	20		169	

上揚科技有限公司
購買、維修、此手冊零組件
電話：03-1661883
Email: service@repairtw.com
Line id: @777
www.repairtw.com

Function	Pr.	Pr. group	Name	Setting range	Minimum setting increments	Initial value FM	Initial value CA	Refer to page	Customer setting
Adjustment	820	G211	Speed control P gain 1	0 to 1000%	1%	25%		182	
	821	G212	Speed control integral time 1	0 to 20 s	0.001 s	0.333 s		182	
	822	T003	Speed setting filter 1	0 to 5 s, 9999	0.001 s	9999		337	
	824	G213	Torque control P gain 1 (current loop proportional gain)	0 to 500%	1%	50%		182	
	825	G214	Torque control integral time 1 (current loop integral time)	0 to 500 ms	0.1 ms	40 ms		182	
	827	G216	Torque detection filter 1	0 to 0.1 s	0.001 s	0 s		185	
	828	G224	Parameter for manufacturer setting. Do not set.						
	830	G311	Speed control P gain 2	0 to 1000%, 9999	1%	9999		182	
	831	G312	Speed control integral time 2	0 to 20 s, 9999	0.001 s	9999		182	
	832	T005	Speed setting filter 2	0 to 5 s, 9999	0.001 s	9999		337	
	834	G313	Torque control P gain 2 (current loop proportional gain)	0 to 500%, 9999	1%	9999		182	
	835	G314	Torque control integral time 2 (current loop integral time)	0 to 500 ms, 9999	0.1 ms	9999		182	
	837	G316	Torque detection filter 2	0 to 0.1 s, 9999	0.001 s	9999		185	
Additional function	849	T007	Analog input offset adjustment	0 to 200%	0.1%	100%		337	
	858	T040	Terminal 4 function assignment	0, 4, 9999	1	0		273, 334	
	859	C126	Torque current/Rated PM motor current	0 to 500 A, 9999*2	0.01 A*2	9999		366, 375	
				0 to 3600 A, 9999*3	0.1 A*3				
	860	C226	Second motor torque current/ Rated PM motor current	0 to 500 A, 9999*2	0.01 A*2	9999		366, 375	
				0 to 3600 A, 9999*3	0.1 A*3				
	864	M470	Torque detection	0 to 400%	0.1%	150%		323	
Indication	866	M042	Torque monitoring reference	0 to 400%	0.1%	150%		297	
—	867	M321	AM output filter	0 to 5 s	0.01 s	0.01 s		302	
—	868	T010	Terminal 1 function assignment	0, 4, 9999	1	0		273, 334	
—	869	M334	Current output filter	0 to 5 s	0.01 s	—	0.02 s	302	
—	870	M440	Speed detection hysteresis	0 to 5 Hz	0.01 Hz	0 Hz		319	
Protective function	872*14	H201	Input phase loss protection selection	0, 1	1	0		260	
	874	H730	OLT level setting	0 to 400%	0.1%	120%	110%	273	
Regeneration avoidance	882	G120	Regeneration avoidance operation selection	0 to 2	1	0		545	
	883	G121	Regeneration avoidance operation level	300 to 1200 V	0.1 V	380 VDC*7		545	
						760 VDC*8			
	884	G122	Regeneration avoidance at deceleration detection sensitivity	0 to 5	1	0		545	
	885	G123	Regeneration avoidance compensation frequency limit value	0 to 590 Hz, 9999	0.01 Hz	6 Hz		545	
	886	G124	Regeneration avoidance voltage gain	0 to 200%	0.1%	100%		545	
Free parameter	888	E420	Free parameter 1	0 to 9999	1	9999		200	
	889	E421	Free parameter 2	0 to 9999	1	9999		200	

上正科技有限公司
購買、維修、昨士卅零組件
電話： 03/-466333
Email: service@repairtw.com
Line id: @zzzz
www.repairtw.com

Function	Pr.	Pr. group	Name	Setting range	Minimum setting increments	Initial value FM	Initial value CA	Refer to page	Customer setting
Energy saving monitoring	891	M023	Cumulative power monitor digit shifted times	0 to 4, 9999	1	9999		288, 306	
	892	M200	Load factor	30 to 150%	0.1%	100%		306	
	893	M201	Energy saving monitor reference (motor capacity)	0.1 to 55 kW[*2] 0 to 3600 kW[*3]	0.01 kW[*2] 0.1 kW[*3]	Inverter rated current		306	
	894	M202	Control selection during commercial power-supply operation	0 to 3	1	0		306	
	895	M203	Power saving rate reference value	0, 1, 9999	1	9999		306	
	896	M204	Power unit cost	0 to 500, 9999	0.01	9999		306	
	897	M205	Power saving monitor average time	0 to 1000 h, 9999	1 h	9999		306	
	898	M206	Power saving cumulative monitor clear	0, 1, 10, 9999	1	9999		306	
	899	M207	Operation time rate (estimated value)	0 to 100%, 9999	0.1%	9999		306	
Calibration parameter	C0 (900)[*9]	M310	FM/CA terminal calibration	—	—	—		302	
	C1 (901)[*9]	M320	AM terminal calibration	—	—	—		302	
	C2 (902)[*9]	T200	Terminal 2 frequency setting bias frequency	0 to 590 Hz	0.01 Hz	0 Hz		339	
	C3 (902)[*9]	T201	Terminal 2 frequency setting bias	0 to 300%	0.1%	0%		339	
	125 (903)[*9]	T202	Terminal 2 frequency setting gain frequency	0 to 590 Hz	0.01 Hz	60 Hz	50 Hz	339	
	C4 (903)[*9]	T203	Terminal 2 frequency setting gain	0 to 300%	0.1%	100%		339	
	C5 (904)[*9]	T400	Terminal 4 frequency setting bias frequency	0 to 590 Hz	0.01 Hz	0 Hz		339	
	C6 (904)[*9]	T401	Terminal 4 frequency setting bias	0 to 300%	0.1%	20%		339	
	126 (905)[*9]	T402	Terminal 4 frequency setting gain frequency	0 to 590 Hz	0.01 Hz	60 Hz	50 Hz	339	
	C7 (905)[*9]	T403	Terminal 4 frequency setting gain	0 to 300%	0.1%	100%		339	
	C12 (917)[*9]	T100	Terminal 1 bias frequency (speed)	0 to 590 Hz	0.01 Hz	0 Hz		339	
	C13 (917)[*9]	T101	Terminal 1 bias (speed)	0 to 300%	0.1%	0%		339	
	C14 (918)[*9]	T102	Terminal 1 gain frequency (speed)	0 to 590 Hz	0.01 Hz	60 Hz	50 Hz	339	
	C15 (918)[*9]	T103	Terminal 1 gain (speed)	0 to 300%	0.1%	100%		339	
	C16 (919)[*9]	T110	Terminal 1 bias command (torque)	0 to 400%	0.1%	0%		344	

上正科技有限公司
購買、維修 此手冊零組件
電話： 037-496333
Email: service@repairtw.com
Line Id: @3333
www.repairtw.com

Function	Pr.	Pr. group	Name	Setting range	Minimum setting increments	Initial value FM	Initial value CA	Refer to page	Customer setting
Calibration parameter	C17 (919)*9	T111	Terminal 1 bias (torque)	0 to 300%	0.1%	0%		344	
	C18 (920)*9	T112	Terminal 1 gain command (torque)	0 to 400%	0.1%	150%		344	
	C19 (920)*9	T113	Terminal 1 gain (torque)	0 to 300%	0.1%	100%		344	
	C8 (930)*9	M330	Current output bias signal	0 to 100%	0.1%	—	0%	302	
	C9 (930)*9	M331	Current output bias current	0 to 100%	0.1%	—	0%	302	
	C10 (931)*9	M332	Current output gain signal	0 to 100%	0.1%	—	100%	302	
	C11 (931)*9	M333	Current output gain current	0 to 100%	0.1%	—	100%	302	
	C38 (932)*9	T410	Terminal 4 bias command (torque)	0 to 400%	0.1%	0%		344	
	C39 (932)*9	T411	Terminal 4 bias (torque)	0 to 300%	0.1%	20%		344	
	C40 (933)*9	T412	Terminal 4 gain command (torque)	0 to 400%	0.1%	150%		344	
	C41 (933)*9	T413	Terminal 4 gain (torque)	0 to 300%	0.1%	100%		344	
	C42 (934)*9	A630	PID display bias coefficient	0 to 500, 9999	0.01	9999		423	
	C43 (934)*9	A631	PID display bias analog value	0 to 300%	0.1%	20%		423	
	C44 (935)*9	A632	PID display gain coefficient	0 to 500, 9999	0.01	9999		423	
	C45 (935)*9	A633	PID display gain analog value	0 to 300%	0.1%	100%		423	
—	977	E302	Input voltage mode selection	0 to 2	1	0		195	
—	989	E490	Parameter copy alarm release	10*2 100*3	1	10*2 100*3		552	
PU	990	E104	PU buzzer control	0, 1	1	1		191	
	991	E105	PU contrast adjustment	0 to 63	1	58		191	
Monitoring function	992	M104	Operation panel setting dial push monitor selection	0 to 3, 5 to 14, 17, 18, 20, 23 to 25, 34, 38, 40 to 45, 50 to 57, 61, 62, 64, 67 to 69, 81 to 96, 98, 100	1	0		288	
—	997	H103	Fault initiation	0 to 255, 9999	1	9999		260	
—	998	E430	PM parameter initialization Simple	0, 12, 14, 112, 114, 8009, 8109, 9009, 9109*10*11 0, 8009, 8109, 9009, 9109*12	1	0		174	
—	999	E431	Automatic parameter setting Simple	1, 2, 10 to 13, 20, 21, 9999	1	9999		200	
—	1000	E108	Direct setting selection	0 to 2	1	0		192	
—	1002	C150	Lq tuning target current adjustment coefficient	50 to 150%, 9999	0.1%	9999		375	
Clock	1006	E020	Clock (year)	2000 to 2099	1	2000		187	
	1007	E021	Clock (month, day)	Jan. 1 to Dec. 31	1	101		187	
	1008	E022	Clock (hour, minute)	0:00 to 23:59	1	0		187	
—	1013*14	H323	Emergency drive running speed after retry reset	0 to 590 Hz	0.01 Hz	60 Hz	50 Hz	263	

上正科技有限公司
購買、維修 此手冊零組件
電話：037-480399
Email: service@repairtw.com
Line Id: @zzzz
www.repairtw.com

Function	Pr.	Pr. group	Name	Setting range	Minimum setting increments	Initial value FM	Initial value CA	Refer to page	Customer setting
—	1015	A607	Integral stop selection at limited frequency	0 to 2, 10 to 12	1	0		401	
—	1016	H021	PTC thermistor protection detection time	0 to 60 s	1 s	0		252	
—	1018	M045	Monitor with sign selection	0, 9999	1	9999		288	
Trace	1020	A900	Trace operation selection	0 to 4	1	0		465	
	1021	A901	Trace mode selection	0 to 2	1	0		465	
	1022	A902	Sampling cycle	0 to 9	1	2		465	
	1023	A903	Number of analog channels	1 to 8	1	4		465	
	1024	A904	Sampling auto start	0, 1	1	0		465	
	1025	A905	Trigger mode selection	0 to 4	1	0		465	
	1026	A906	Number of sampling before trigger	0 to 100%	1%	90%		465	
	1027	A910	Analog source selection (1ch)	1 to 3, 5 to 14, 17, 18, 20, 23, 24, 34, 40 to 42, 52 to 54, 61, 62, 64, 67 to 69, 81 to 96, 98, 201 to 213, 230 to 232, 237, 238	1	201		465	
	1028	A911	Analog source selection (2ch)			202		465	
	1029	A912	Analog source selection (3ch)			203		465	
	1030	A913	Analog source selection (4ch)			204		465	
	1031	A914	Analog source selection (5ch)			205		465	
	1032	A915	Analog source selection (6ch)			206		465	
	1033	A916	Analog source selection (7ch)			207		465	
	1034	A917	Analog source selection (8ch)			208		465	
	1035	A918	Analog trigger channel	1 to 8	1	1		465	
	1036	A919	Analog trigger operation selection	0, 1	1	0		465	
	1037	A920	Analog trigger level	600 to 1400	1	1000		465	
	1038	A930	Digital source selection (1ch)	1 to 255	1	1		465	
	1039	A931	Digital source selection (2ch)			2		465	
	1040	A932	Digital source selection (3ch)			3		465	
	1041	A933	Digital source selection (4ch)			4		465	
	1042	A934	Digital source selection (5ch)			5		465	
	1043	A935	Digital source selection (6ch)			6		465	
	1044	A936	Digital source selection (7ch)			7		465	
	1045	A937	Digital source selection (8ch)			8		465	
	1046	A938	Digital trigger channel	1 to 8	1	1		465	
	1047	A939	Digital trigger operation selection	0, 1	1	0		465	
—	1048	E106	Display-off waiting time	0 to 60 min	1 min	0		191	
—	1049	E110	USB host reset	0, 1	1	0		192	
Monitoring function	1106	M050	Torque monitor filter	0 to 5 s, 9999	0.01 s	9999		288	
	1107	M051	Running speed monitor filter	0 to 5 s, 9999	0.01 s	9999		288	
	1108	M052	Excitation current monitor filter	0 to 5 s, 9999	0.01 s	9999		288	

上正科技有限公司
購買、維修 此手冊零組件
電話： 037-466333
Email: service@repairtw.com
Line id: @zzzz
www.repairtw.com

Function	Pr.	Pr. group	Name	Setting range	Minimum setting increments	Initial value FM	Initial value CA	Refer to page	Customer setting
PID control	1132	A626	Pre-charge change increment amount	0 to 100%, 9999	0.01%	9999		425	
	1133	A666	Second pre-charge change increment amount	0 to 100%, 9999	0.01%	9999		425	
	1136	A670	Second PID display bias coefficient	0 to 500, 9999	0.01	9999		423	
	1137	A671	Second PID display bias analog value	0 to 300%	0.1%	20%		423	
	1138	A672	Second PID display gain coefficient	0 to 500, 9999	0.01	9999		423	
	1139	A673	Second PID display gain analog value	0 to 300%	0.1%	100%		423	
	1140	A664	Second PID set point/ deviation input selection	1 to 5	1	2		401	
	1141	A665	Second PID measured value input selection	1 to 5, 101 to 105	1	3		401	
	1142	A640	Second PID unit selection	0 to 43, 9999	1	9999		401	
	1143	A641	Second PID upper limit	0 to 100%, 9999	0.1%	9999		401	
	1144	A642	Second PID lower limit	0 to 100%, 9999	0.1%	9999		401	
	1145	A643	Second PID deviation limit	0 to 100%, 9999	0.1%	9999		401	
	1146	A644	Second PID signal operation selection	0 to 7, 10 to 17	1	0		401	
	1147	A661	Second output interruption detection time	0 to 3600 s, 9999	0.1 s	1		401	
	1148	A662	Second output interruption detection level	0 to 590 Hz	0.01 Hz	0 Hz		401	
	1149	A663	Second output interruption cancel level	900 to 1100%	0.1%	1000%		401	
PLC	1150 to 1199	A810 to A859	PLC function user parameters 1 to 50	0 to 65535	1	0		462	
PID gain tuning	1211	A690	PID gain tuning timeout time	1 to 9999 s	1 s	100 s		417	
	1212	A691	Step manipulated amount	900 to 1100%	0.1%	1000%		417	
	1213	A692	Step responding sampling cycle	0.01 to 600 s	0.01 s	1 s		417	
	1214	A693	Timeout time after the maximum slope	1 to 9999 s	1 s	10 s		417	
	1215	A694	Limit cycle output upper limit	900 to 1100%	0.1%	1100%		417	
	1216	A695	Limit cycle output lower limit	900 to 1100%	0.1%	1000%		417	
	1217	A696	Limit cycle hysteresis	0.1 to 10%	0.1%	1%		417	
	1218	A697	PID gain tuning setting	0, 100 to 102, 111, 112, 121, 122, 200 to 202, 211, 212, 221, 222	1	0		417	
	1219	A698	PID gain tuning start/status	(0), 1, 8, (9, 90 to 96)	1	0		417	
—	1300 to 1343, 1350 to 1359	N500 to N543, N550 to N559	Communication option parameters. For details, refer to the Instruction Manual of the option.						

上正科技有限公司
購買、維修 此手冊零組件
電話： 037-466333
Email: service@repairtw.com
Line id: @zzzz
www.repairtw.com

Function	Pr.	Pr. group	Name	Setting range	Minimum setting increments	Initial value		Refer to page	Customer setting
						FM	CA		
PID control enhanced functions	1361	A440	Detection time for PID output hold	0 to 900 s	0.1 s	5 s		439	
	1362	A441	PID output hold range	0 to 50%, 9999	0.1%	9999		439	
	1363	A447	PID priming time	0 to 360 s, 9999	0.1 s	9999		439	
	1364	A448	Stirring time during sleep	0 to 3600 s	0.1 s	15 s		439	
	1365	A449	Stirring interval time	0 to 1000 h	0.1 h	0 h		439	
	1366	A627	Sleep boost level	0 to 100%, 9999	0.01%	9999		439	
	1367	A628	Sleep boost waiting time	0 to 360 s	0.1 s	0 s		439	
	1368	A629	Output interruption cancel time	0 to 360 s	0.1 s	0 s		439	
	1369	A446	Check valve closing completion frequency	0 to 120 Hz, 9999	0.01 Hz	9999		439	
	1370	A442	Detection time for PID limiting operation	0 to 900 s	0.1 s	0 s		439	
	1371	A443	PID upper/lower limit pre-warning level range	0 to 50%, 9999	0.1%	9999		439	
	1372	A444	PID measured value control set point change amount	0 to 50%	0.01%	5%		439	
	1373	A445	PID measured value control set point change rate	0 to 100%	0.01%	0%		439	
	1374	A450	Auxiliary pressure pump operation starting level	900 to 1100%	0.1%	1000%		439	
	1375	A451	Auxiliary pressure pump operation stopping level	900 to 1100%	0.1%	1000%		439	
	1376	A414	Auxiliary motor stopping level	0 to 100%, 9999	0.1%	9999		439	
	1377	A452	PID input pressure selection	1 to 3, 9999	1	9999		439	
	1378	A453	PID input pressure warning level	0 to 100%	0.1%	20%		439	
	1379	A454	PID input pressure fault level	0 to 100%, 9999	0.1%	9999		439	
	1380	A455	PID input pressure warning set point change amount	0 to 100%	0.01%	5%		439	
	1381	A456	PID input pressure fault operation selection	0, 1	1	0		439	
—	1410	A170	Starting times lower 4 digits	0 to 9999	1	0		395	
—	1411	A171	Starting times upper 4 digits	0 to 9999	1	0		395	
—	1412	C135	Motor induced voltage constant (phi f) exponent	0 to 2, 9999	1	9999		375	
—	1413	C235	Second motor induced voltage constant (phi f) exponent	0 to 2, 9999	1	9999		375	
PID gain tuning	1460	A683	PID multistage set point 1	0 to 100%, 9999	0.01%	9999		401	
	1461	A684	PID multistage set point 2	0 to 100%, 9999	0.01%	9999		401	
	1462	A685	PID multistage set point 3	0 to 100%, 9999	0.01%	9999		401	
	1463	A686	PID multistage set point 4	0 to 100%, 9999	0.01%	9999		401	
	1464	A687	PID multistage set point 5	0 to 100%, 9999	0.01%	9999		401	
	1465	A688	PID multistage set point 6	0 to 100%, 9999	0.01%	9999		401	
	1466	A689	PID multistage set point 7	0 to 100%, 9999	0.01%	9999		401	

上正科技有限公司
購買、維修、此手冊零組件
電話： 037-466333
Email: service@repairtw.com
Line id: @zzzz
www.repairtw.com

Function	Pr.	Pr. group	Name	Setting range	Minimum setting increments	Initial value FM	Initial value CA	Refer to page	Customer setting
Cleaning	1469	A420	Number of cleaning times monitor	0 to 255	1	0		398	
	1470	A421	Number of cleaning times setting	0 to 255	1	0		398	
	1471	A422	Cleaning trigger selection	0 to 15	1	0		398	
	1472	A423	Cleaning reverse rotation frequency	0 to 590 Hz	0.01 Hz	30 Hz		398	
	1473	A424	Cleaning reverse rotation operation time	0 to 3600 s	0.1 s	5 s		398	
	1474	A425	Cleaning forward rotation frequency	0 to 590 Hz, 9999	0.01 Hz	9999		398	
	1475	A426	Cleaning forward rotation operation time	0 to 3600 s, 9999	0.1 s	9999		398	
	1476	A427	Cleaning stop time	0 to 3600 s	0.1 s	5 s		398	
	1477	A428	Cleaning acceleration time	0 to 3600 s, 9999	0.1 s	9999		398	
	1478	A429	Cleaning deceleration time	0 to 3600 s, 9999	0.1 s	9999		398	
	1479	A430	Cleaning time trigger	0 to 6000 h	0.1 h	0 h		398	
Load characteristics fault detection	1480	H520	Load characteristics measurement mode	0, 1 (2 to 5, 81 to 85)	1	0		281	
	1481	H521	Load characteristics load reference 1	0 to 400%, 8888, 9999	0.1%	9999		281	
	1482	H522	Load characteristics load reference 2	0 to 400%, 8888, 9999	0.1%	9999		281	
	1483	H523	Load characteristics load reference 3	0 to 400%, 8888, 9999	0.1%	9999		281	
	1484	H524	Load characteristics load reference 4	0 to 400%, 8888, 9999	0.1%	9999		281	
	1485	H525	Load characteristics load reference 5	0 to 400%, 8888, 9999	0.1%	9999		281	
	1486	H526	Load characteristics maximum frequency	0 to 590 Hz	0.01 Hz	60 Hz	50 Hz	281	
	1487	H527	Load characteristics minimum frequency	0 to 590 Hz	0.01 Hz	6 Hz		281	
	1488	H531	Upper limit warning detection width	0 to 400%, 9999	0.1%	20%		281	
	1489	H532	Lower limit warning detection width	0 to 400%, 9999	0.1%	20%		281	
	1490	H533	Upper limit fault detection width	0 to 400%, 9999	0.1%	9999		281	
	1491	H534	Lower limit fault detection width	0 to 400%, 9999	0.1%	9999		281	
	1492	H535	Load status detection signal delay time / load reference measurement waiting time	0 to 60 s	0.1 s	1 s		281	
Clear parameters	Pr.CLR		Parameter clear	(0), 1	1	0		551	
	ALL.CL		All parameter clear	(0), 1	1	0		551	
	Err.CL		Fault history clear	(0), 1	1	0		564	
—	Pr.CPY		Parameter copy	(0), 1 to 3	1	0		552	
—	Pr.CHG		Initial value change list	—	1	0		559	
—	IPM		IPM initialization	0, 12, 14	1	0		174	
—	AUTO		Automatic parameter setting	—	—	—		200	
—	Pr.MD		Group parameter setting	(0), 1, 2	1	0		156	

上正科技有限公司
購買、維修 此手冊零組件
電話： 037-466333
Email: service@repairtw.com
Line id: @zzzz
www.repairtw.com

*1 Differs according to the capacity.
6%: FR-F820-00046(0.75K) or lower and FR-F840-00023(0.75K) or lower
4%: FR-F820-00077(1.5K) to FR-F820-00167(3.7K), FR-F840-00038(1.5K) to FR-F840-00083(3.7K)
3%: FR-F820-00250(5.5K), FR-F820-00340(7.5K), FR-F840-00126(5.5K), FR-F840-00170(7.5K)
2%: FR-F820-00490(11K) to FR-F820-01540(37K), FR-F840-00250(11K) to FR-F840-00770(37K)
1.5%: FR-F820-01870(45K), FR-F820-02330(55K), FR-F840-00930(45K), FR-F840-01160(55K)
1%: FR-F820-03160(75K) or higher and FR-F840-01800(75K) or higher

*2 The setting range or initial value for the FR-F820-02330(55K) or lower and FR-F840-01160(55K) or lower.
*3 The setting range or initial value for the FR-F820-03160(75K) or higher and FR-F840-01800(75K) or higher.
*4 The initial value for the FR-F820-00340(7.5K) or lower and FR-F840-00170(7.5K) or lower.
*5 The initial value for the FR-F820-00490(11K) or higher and FR-F840-00250(11K) or higher.
*6 Differs according to the capacity.
4%: FR-F820-00340(7.5K) or lower and FR-F840-00170(7.5K) or lower
2%: FR-F820-00490(11K) to FR-F820-02330(55K), FR-F840-00250(11K) to FR-F840-01160(55K)
1%: FR-F820-03160(75K) or higher and FR-F840-01800(75K) or higher
*7 The value for the 200 V class.
*8 The value for the 400 V class.
*9 The parameter number in parentheses is the one for use with the LCD operation panel and the parameter unit.
*10 The setting range or initial value for the standard model.
*11 The setting range or initial value for the separated converter type.
*12 The setting range or initial value for the IP55 compatible model.
*13 The setting is available for the standard structure model or the separated converter type.
*14 The setting is available for the standard structure model and the IP55 compatible model.
*15 The setting is available when the PLC function is enabled.

5.1.2 Use of a function group number for the identification of parameters

A parameter identification number shown on the PU can be switched from a parameter number to a function group number. As parameters are grouped by function and displayed by the group, the related parameters can be set continually at a time.

◆ Changing a parameter identification number to a function group number

Pr.MD setting	Description
0	The setting of parameter identification number remains the same as the last setting.
1	The parameter number is used for the identification of parameters, and displayed in numerical order.
2	The function group number is used for the identification of parameters, and displayed in alphanumeric order.

上禾科技有限公司
購買、維修、此手冊零組件
電話： 037-466333
Email: service@repairtw.com
Line id: @zzzz
www.repairtw.com

Operating procedure

1. Turning ON the power of the inverter
The operation panel is in the monitor mode.

2. Selecting the parameter setting mode

Press [MODE] to choose the parameter setting mode. (The parameter number read previously appears on the 12-segment LCD display.)

3. Selecting a parameter

Turn ⊛ until "Pr.Md" (Group parameter setting) appears.

Press [SET] to confirm the selection. The setting " 0 "(initial value) will appear.

4. Selecting the use of the function group number

Turn ⊛ to change the set value to " 2 " (function group number). Press [SET] to confirm the Group parameter setting. " 2 " and " Pr.Md " are displayed alternately after the setting is completed.

◆ Selecting a parameter by function group number to change its setting

The following shows the procedure to change the setting of **P.H400 (Pr.1) Maximum frequency**.

Operating procedure

1. Turning ON the power of the inverter

The operation panel is in the monitor mode.

2. Changing the operation mode

Press [PU/EXT] to choose the PU operation mode. [PU] indicator turns ON.

3. Selecting the parameter setting mode

Press [MODE] to choose the parameter setting mode. (The parameter number read previously appears on the 12-segment LCD display.)

4. Enabling the function group selection

Press [ESC] several times until "P.A0 . ." appears. Parameter groups can now be selected.

5. Enabling the function group selection

Turn ⊛ until "P.H4 . ." (Protective function parameter 4) appears. Press [SET] to confirm the selection. "P.H4-- --" will appear, which shows that the operation panel is ready for selection of a number in the group of Protective function parameter 4.

6. Selecting a parameter

Turn ⊛ until "P.H400" (**P.H400 Maximum frequency**) appears. Press [SET] to display the present set value. " 120.00 (initial value)" appears.

7. Changing the setting value

Turn ⊛ to change the set value to "60.00". Press [SET] to confirm the selection. " 60.00 " and " P.H400 " are displayed alternately after the setting is completed.

上正科技有限公司
購買、維修、此手冊零組件
電話：02-466333
Email: service@repairtw.com
Line Id: @ozz7
www.repairtw.com

5.1.3 Parameter list (by function group number)

◆ E: Environment setting parameters

Parameters for the inverter operating environment.

Pr. group	Pr.	Name	Refer to page
E000	168	Parameter for manufacturer setting. Do not set.	
E001	169	Parameter for manufacturer setting. Do not set.	
E020	1006	Clock (year)	187
E021	1007	Clock (month, day)	187
E022	1008	Clock (hour, minute)	187
E023	269	Parameter for manufacturer setting. Do not set.	
E080	168	Parameter for manufacturer setting. Do not set.	
E081	169	Parameter for manufacturer setting. Do not set.	
E100	75	Reset selection	188
E101	75	Disconnected PU detection	188
E102	75	PUStop selection	188
E103	145	PU display language selection	191
E104	990	PU buzzer control	191
E105	991	PU contrast adjustment	191
E106	1048	Display-off waiting time	191
E107	75	Reset limit	188
E108	1000	Direct setting selection	192
E110	1049	USB host reset	572
E200	161	Frequency setting/key lock operation selection	192
E201	295	Frequency change increment amount setting	193
E300	30	Regenerative function selection	539
E301	570	Multiple rating setting	194
E302	977	Input voltage mode selection	195
E400	77	Parameter write selection	196
E410	296	Password lock level	198
E411	297	Password lock/unlock	198
E420	888	Free parameter 1	200
E421	889	Free parameter 2	200
E430	998	PM parameter initialization Simple	174
E431	999	Automatic parameter setting Simple	200
E440	160	User group read selection Simple	204
E441	172	User group registered display/ batch clear	204
E442	173	User group registration	204
E443	174	User group clear	204
E490	989	Parameter copy alarm release	552
E600	72	PWM frequency selection	207
E601	240	Soft-PWM operation selection	207
E602	260	PWM frequency automatic switchover	207
E700	255	Life alarm status display	208
E701	256*3	Inrush current limit circuit life display	208
E702	257	Control circuit capacitor life display	208
E703	258*3	Main circuit capacitor life display	208
E704	259*3	Main circuit capacitor life measuring	208
E710	503	Maintenance timer 1	212
E711	504	Maintenance timer 1 warning output set time	212
E712	686	Maintenance timer 2	212
E713	687	Maintenance timer 2 warning output set time	212
E714	688	Maintenance timer 3	212
E715	689	Maintenance timer 3 warning output set time	212
E720	555	Current average time	213
E721	556	Data output mask time	213
E722	557	Current average value monitor signal output reference current	213

◆ F: Parameters for the settings of the acceleration/deceleration time and the acceleration/deceleration pattern

Parameters for the motor acceleration/deceleration characteristics.

Pr. group	Pr.	Name	Refer to page
F000	20	Acceleration/deceleration reference frequency	216
F001	21	Acceleration/deceleration time increments	216
F002	16	Jog acceleration/deceleration time	248
F003	611	Acceleration time at a restart	446, 451
F010	7	Acceleration time Simple	216
F011	8	Deceleration time Simple	216
F020	44	Second acceleration/deceleration time	216
F021	45	Second deceleration time	216
F022	147	Acceleration/deceleration time switching frequency	216
F031	111	Check valve deceleration time	439
F070	791	Acceleration time in low-speed range	216
F071	792	Deceleration time in low-speed range	216
F100	29	Acceleration/deceleration pattern selection	219
F101	59	Remote function selection	222
F102	13	Starting frequency	225, 226
F103	571	Holding time at a start	225
F200	140	Backlash acceleration stopping frequency	219
F201	141	Backlash acceleration stopping time	219
F202	142	Backlash deceleration stopping frequency	219
F203	143	Backlash deceleration stopping time	219

上正科技有限公司
購買、維修 此手冊零組件
電話：037-466333
Email: service@repairtw.com
Line id: @zzzz
www.repairtw.com

◆ D: Parameters for the setting of operation command and frequency command

Parameters for setting the command source to the inverter, and the motor driving frequency and torque.

Pr. group	Pr.	Name	Refer to page
D000	79	Operation mode selection Simple	228, 237
D001	340	Communication startup mode selection	237
D010	338	Communication operation command source	239
D011	339	Communication speed command source	239
D012	550	NET mode operation command source selection	239
D013	551	PU mode operation command source selection	239
D020	78	Reverse rotation prevention selection	245
D100	291	Pulse train I/O selection	245, 297
D101	384	Input pulse division scaling factor	245
D110	385	Frequency for zero input pulse	245
D111	386	Frequency for maximum input pulse	245
D200	15	Jog frequency	248
D300	28	Multi-speed input compensation selection	249
D301	4	Multi-speed setting (high speed) Simple	249
D302	5	Multi-speed setting (middle speed) Simple	249
D303	6	Multi-speed setting (low speed) Simple	249
D304 to D307	24 to 27	Multi-speed setting (4 speed to 7 speed)	249
D308 to D315	232 to 239	Multi-speed setting (8 speed to 15 speed)	249

◆ H: Protective function parameter

Parameters to protect the motor and the inverter.

Pr. group	Pr.	Name	Refer to page
H000	9	Electronic thermal O/L relay Simple	252, 366, 375
H001	600	First free thermal reduction frequency 1	252
H002	601	First free thermal reduction ratio 1	252
H003	602	First free thermal reduction frequency 2	252
H004	603	First free thermal reduction ratio 2	252
H005	604	First free thermal reduction frequency 3	252
H006	607	Motor permissible load level	252
H010	51	Second electronic thermal O/L relay	252, 366, 375
H011	692	Second free thermal reduction frequency 1	252
H012	693	Second free thermal reduction ratio 1	252
H013	694	Second free thermal reduction frequency 2	252
H014	695	Second free thermal reduction ratio 2	252
H015	696	Second free thermal reduction frequency 3	252
H016	608	Second motor permissible load level	252
H020	561	PTC thermistor protection level	252
H021	1016	PTC thermistor protection detection time	252
H100	244	Cooling fan operation selection	258
H101	249	Earth (ground) fault detection at start	259
H102	598	Undervoltage level	260
H103	997	Fault initiation	260
H200	251	Output phase loss protection selection	260
H201	872 *3	Input phase loss protection selection	260
H300	65	Retry selection	261
H301	67	Number of retries at fault occurrence	261
H302	68	Retry waiting time	261
H303	69	Retry count display erase	261
H320	523 *3	Emergency drive mode selection	263
H321	524 *3	Emergency drive running speed	263
H322	515 *3	Emergency drive dedicated retry count	263
H323	1013 *3	Emergency drive running speed after retry reset	263
H324	514 *3	Emergency drive dedicated waiting time	263
H400	1	Maximum frequency Simple	271
H401	2	Minimum frequency Simple	271
H402	18	High speed maximum frequency	271
H420	31	Frequency jump 1A	272
H421	32	Frequency jump 1B	272
H422	33	Frequency jump 2A	272
H423	34	Frequency jump 2B	272
H424	35	Frequency jump 3A	272
H425	36	Frequency jump 3B	272
H429	552	Frequency jump range	272
H500	22	Stall prevention operation level	273
H501	156	Stall prevention operation selection	273
H520	1480	Load characteristics measurement mode	281
H521	1481	Load characteristics load reference 1	281
H522	1482	Load characteristics load reference 2	281
H523	1483	Load characteristics load reference 3	281
H524	1484	Load characteristics load reference 4	281

上正科技有限公司
購買、維修 此手冊零組件
電話： 037-466333
Email: service@repairtw.com
Line id: @zzzz
www.repairtw.com

Pr. group	Pr.	Name	Refer to page
H525	1485	Load characteristics load reference 5	281
H526	1486	Load characteristics maximum frequency	281
H527	1487	Load characteristics minimum frequency	281
H531	1488	Upper limit warning detection width	281
H532	1489	Lower limit warning detection width	281
H533	1490	Upper limit fault detection width	281
H534	1491	Lower limit fault detection width	281
H535	1492	Load status detection signal delay time / load reference measurement waiting time	281
H600	48	Second stall prevention operation level	273
H601	49	Second stall prevention operation frequency	273
H610	23	Stall prevention operation level compensation factor at double speed	273
H611	66	Stall prevention operation reduction starting frequency	273
H620	148	Stall prevention level at 0 V input	273
H621	149	Stall prevention level at 10 V input	273
H631	154	Voltage reduction selection during stall prevention operation	273
H730	874	OLT level setting	273
H800	374	Overspeed detection level	285

◆M: Monitoring and its output signal

Parameters for the settings regarding the monitoring to check the inverter's operating status and the output signals for the monitoring.

Pr. group	Pr.	Name	Refer to page
M000	37	Speed display	286
M001	505	Speed setting reference	286
M002	144	Speed setting switchover	286
M020	170	Watt-hour meter clear	288
M021	563	Energization time carrying-over times	288
M022	268	Monitor decimal digits selection	288
M023	891	Cumulative power monitor digit shifted times	288, 306
M030	171	Operation hour meter clear	288
M031	564	Operating time carrying-over times	288
M040	55	Frequency monitoring reference	297
M041	56	Current monitoring reference	297
M042	866	Torque monitoring reference	297
M043	241	Analog input display unit switchover	339
M044	290	Monitor negative output selection	288, 297
M045	1018	Monitor with sign selection	288
M050	1106	Torque monitor filter	288
M051	1107	Running speed monitor filter	288
M052	1108	Excitation current monitor filter	288

Pr. group	Pr.	Name	Refer to page
M060	663	Control circuit temperature signal output level	329
M100	52	Operation panel main monitor selection	288, 511
M101	774	Operation panel monitor selection 1	288, 511
M102	775	Operation panel monitor selection 2	288, 511
M103	776	Operation panel monitor selection 3	288, 511
M104	992	Operation panel setting dial push monitor selection	288
M200	892	Load factor	306
M201	893	Energy saving monitor reference (motor capacity)	306
M202	894	Control selection during commercial power-supply operation	306
M203	895	Power saving rate reference value	306
M204	896	Power unit cost	306
M205	897	Power saving monitor average time	306
M206	898	Power saving cumulative monitor clear	306
M207	899	Operation time rate (estimated value)	306
M300	54	FM/CA terminal function selection	297
M301	158	AM terminal function selection	297
M310	C0 (900)*1	FM/CA terminal calibration	302
M320	C1 (901)*1	AM terminal calibration	302
M321	867	AM output filter	302
M330	C8 (930)*1	Current output bias signal	302
M331	C9 (930)*1	Current output bias current	302
M332	C10 (931)*1	Current output gain signal	302
M333	C11 (931)*1	Current output gain current	302
M334	869	Current output filter	302
M400	190	RUN terminal function selection	312
M401	191	SU terminal function selection	312
M402	192	IPF terminal function selection	312
M403	193	OL terminal function selection	312
M404	194	FU terminal function selection	312
M405	195	ABC1 terminal function selection	312
M406	196	ABC2 terminal function selection	312
M410	313*4	DO0 output selection	312
M411	314*4	DO1 output selection	312
M412	315*4	DO2 output selection	312
M413	316*4	DO3 output selection	312
M414	317*4	DO4 output selection	312
M415	318*4	DO5 output selection	312
M416	319*4	DO6 output selection	312
M420	320*4	RA1 output selection	312
M421	321*4	RA2 output selection	312
M422	322*4	RA3 output selection	312

上誠科技有限公司
購買、維修 此手冊零組件
電話： 037-466333
Email: service@repairtw.com
Line Id: @zzzz
www.repairtw.com

Pr. group	Pr.	Name	Refer to page
M430	157	OL signal output timer	273
M431	289	Inverter output terminal filter	312
M433	166	Output current detection signal retention time	321
M440	870	Speed detection hysteresis	319
M441	41	Up-to-frequency sensitivity	319
M442	42	Output frequency detection	319
M443	43	Output frequency detection for reverse rotation	319
M444	50	Second output frequency detection	319
M460	150	Output current detection level	321
M461	151	Output current detection signal delay time	321
M462	152	Zero current detection level	321
M463	153	Zero current detection time	321
M464	167	Output current detection operation selection	321
M470	864	Torque detection	323
M500	495	Remote output selection	324
M501	496	Remote output data 1	324
M502	497	Remote output data 2	324
M510	76	Fault code output selection	327
M520	799	Pulse increment setting for output power	286
M530	655	Analog remote output selection	325
M531	656	Analog remote output 1	325
M532	657	Analog remote output 2	325
M533	658	Analog remote output 3	325
M534	659	Analog remote output 4	325

◆ T: Multi-function input terminal parameters

Parameters for the setting of the input terminals via which commands are given to the inverter.

Pr. group	Pr.	Name	Refer to page
T000	73	Analog input selection	330, 335
T001	267	Terminal 4 input selection	330
T002	74	Input filter time constant	337
T003	822	Speed setting filter 1	337
T005	832	Speed setting filter 2	337
T007	849	Analog input offset adjustment	337
T010	868	Terminal 1 function assignment	273, 334
T021	242	Terminal 1 added compensation amount (terminal 2)	335
T022	125	Terminal 2 frequency setting gain frequency Simple	339
T040	858	Terminal 4 function assignment	273, 334
T041	243	Terminal 1 added compensation amount (terminal 4)	335
T042	126	Terminal 4 frequency setting gain frequency Simple	339
T050	252	Override bias	335
T051	253	Override gain	335
T052	573	4 mA input check selection	350

Pr. group	Pr.	Name	Refer to page
T053	777	4 mA input fault operation frequency	350
T054	778	4 mA input check filter	350
T100	C12 (917)*1	Terminal 1 bias frequency (speed)	339
T101	C13 (917)*1	Terminal 1 bias (speed)	339
T102	C14 (918)*1	Terminal 1 gain frequency (speed)	339
T103	C15 (918)*1	Terminal 1 gain (speed)	339
T110	C16 (919)*1	Terminal 1 bias command (torque)	344
T111	C17 (919)*1	Terminal 1 bias (torque)	344
T112	C18 (920)*1	Terminal 1 gain command (torque)	344
T113	C19 (920)*1	Terminal 1 gain (torque)	344
T200	C2 (902)*1	Terminal 2 frequency setting bias frequency	339
T201	C3 (902)*1	Terminal 2 frequency setting bias	339
T202	125 (903)*1	Terminal 2 frequency setting gain frequency	339
T203	C4 (903)*1	Terminal 2 frequency setting gain	339
T400	C5 (904)*1	Terminal 4 frequency setting bias frequency	339
T401	C6 (904)*1	Terminal 4 frequency setting bias	339
T402	126 (905)*1	Terminal 4 frequency setting gain frequency	339
T403	C7 (905)*1	Terminal 4 frequency setting gain	339
T410	C38 (932)*1	Terminal 4 bias command (torque)	344
T411	C39 (932)*1	Terminal 4 bias (torque)	344
T412	C40 (933)*1	Terminal 4 gain command (torque)	344
T413	C41 (933)*1	Terminal 4 gain (torque)	344
T700	178	STF terminal function selection	355
T701	179	STR terminal function selection	355
T702	180	RL terminal function selection	355
T703	181	RM terminal function selection	355
T704	182	RH terminal function selection	355
T705	183	RT terminal function selection	355
T706	184	AU terminal function selection	355
T707	185	JOG terminal function selection	355
T708	186	CS terminal function selection	355
T709	187	MRS terminal function selection	355
T710	188	STOP terminal function selection	355
T711	189	RES terminal function selection	355
T720	17	MRS input selection	357
T721	599	X10 terminal input selection	539

鴻運科技有限公司
購買、維修 此手冊零組件
電話： 037-466399
Email: service@repairtw.com
Line id: @zzzz
www.repairtw.com

Pr. group	Pr.	Name	Refer to page
T722	606	Power failure stop external signal input selection	458
T730	155	RT signal function validity condition selection	358
T740	699	Input terminal filter	355

◆ C: Motor constant parameters

Parameters for the applied motor setting.

Pr. group	Pr.	Name	Refer to page
C000	684	Tuning data unit switchover	366, 375
C100	71	Applied motor	362, 366, 375
C101	80	Motor capacity	169, 366, 375
C102	81	Number of motor poles	169, 366, 375
C103	9	Rated motor current Simple	252, 366, 375
C104	83	Rated motor voltage	169, 366, 375
C105	84	Rated motor frequency	169, 366, 375
C106	702	Maximum motor frequency	375
C107	707	Motor inertia (integer)	375
C108	724	Motor inertia (exponent)	375
C110	96	Auto tuning setting/status	366, 375, 454
C111	95	Online auto tuning selection	382
C120	90	Motor constant (R1)	366, 375, 454
C121	91	Motor constant (R2)	366
C122	92	Motor constant (L1)/d-axis inductance (Ld)	366, 375
C123	93	Motor constant (L2)/q-axis inductance (Lq)	366, 375
C124	94	Motor constant (X)	366
C125	82	Motor excitation current	366
C126	859	Torque current/Rated PM motor current	366, 375
C130	706	Induced voltage constant (phi f)	375
C131	711	Motor Ld decay ratio	375
C132	712	Motor Lq decay ratio	375
C133	725	Motor protection current level	375
C135	1412	Motor induced voltage constant (phi f) exponent	375
C150	1002	Lq tuning target current adjustment coefficient	375
C182	717	Starting resistance tuning compensation	375
C185	721	Starting magnetic pole position detection pulse width	375
C200	450	Second applied motor	362

Pr. group	Pr.	Name	Refer to page
C201	453	Second motor capacity	366, 375
C202	454	Number of second motor poles	366, 375
C203	51	Rated second motor current	252, 366, 375
C204	456	Rated second motor voltage	366, 375
C205	457	Rated second motor frequency	366, 375
C206	743	Second motor maximum frequency	375
C207	744	Second motor inertia (integer)	375
C208	745	Second motor inertia (exponent)	375
C210	463	Second motor auto tuning setting/status	366, 375, 454
C211	574	Second motor online auto tuning	382
C220	458	Second motor constant (R1)	366, 375, 454
C221	459	Second motor constant (R2)	366
C222	460	Second motor constant (L1) / d-axis inductance (Ld)	366, 375
C223	461	Second motor constant (L2) / q-axis inductance (Lq)	366, 375
C224	462	Second motor constant (X)	366
C225	455	Second motor excitation current	366
C226	860	Second motor torque current/Rated PM motor current	366, 375
C230	738	Second motor induced voltage constant (phi f)	375
C231	739	Second motor Ld decay ratio	375
C232	740	Second motor Lq decay ratio	375
C233	746	Second motor protection current level	375
C235	1413	Second motor induced voltage constant (phi f) exponent	375
C282	741	Second starting resistance tuning compensation	375
C285	742	Second motor magnetic pole detection pulse width	375

◆ A: Application parameters

Parameters for the setting of a specific application.

Pr. group	Pr.	Name	Refer to page
A000	135	Electronic bypass sequence selection	387
A001	136	MC switchover interlock time	387
A002	137	Start waiting time	387
A003	138	Bypass selection at a fault	387
A004	139	Automatic switchover frequency from inverter to bypass operation	387
A005	159	Automatic switchover frequency range from bypass to inverter operation	387
A006	248	Self power management selection	393
A007	254	Main circuit power OFF waiting time	393
A170	1410	Starting times lower 4 digits	395

上正科技有限公司
購買、維修 此為測試用
電話：037-466333
Email: service@repairtw.com
Line id: @zzzz
www.repairtw.com

Pr. group	Pr.	Name	Refer to page
A171	1411	Starting times upper 4 digits	395
A300	592	Traverse function selection	396
A301	593	Maximum amplitude amount	396
A302	594	Amplitude compensation amount during deceleration	396
A303	595	Amplitude compensation amount during acceleration	396
A304	596	Amplitude acceleration time	396
A305	597	Amplitude deceleration time	396
A400	578	Auxiliary motor operation selection	430
A401	579	Motor connection function selection	430
A402	580	MC switchover interlock time (multi-pump)	430
A403	581	Start waiting time (multi-pump)	430
A404	582	Auxiliary motor connection-time deceleration time	430
A405	583	Auxiliary motor disconnection-time acceleration time	430
A406	584	Auxiliary motor 1 starting frequency	430
A407	585	Auxiliary motor 2 starting frequency	430
A408	586	Auxiliary motor 3 starting frequency	430
A409	587	Auxiliary motor 1 stopping frequency	430
A410	588	Auxiliary motor 2 stopping frequency	430
A411	589	Auxiliary motor 3 stopping frequency	430
A412	590	Auxiliary motor start detection time	430
A413	591	Auxiliary motor stop detection time	430
A414	1376	Auxiliary motor stopping level	430
A420	1469	Number of cleaning times monitor	398
A421	1470	Number of cleaning times setting	398
A422	1471	Cleaning trigger selection	398
A423	1472	Cleaning reverse rotation frequency	398
A424	1473	Cleaning reverse rotation operation time	398
A425	1474	Cleaning forward rotation frequency	398
A426	1475	Cleaning forward rotation operation time	398
A427	1476	Cleaning stop time	398
A428	1477	Cleaning acceleration time	398
A429	1478	Cleaning deceleration time	398
A430	1479	Cleaning time trigger	398
A440	1361	Detection time for PID output hold	439
A441	1362	PID output hold range	439
A442	1370	Detection time for PID limiting operation	401, 439
A443	1371	PID upper/lower limit pre-warning level range	439
A444	1372	PID measured value control set point change amount	439
A445	1373	PID measured value control set point change rate	439

Pr. group	Pr.	Name	Refer to page
A446	1369	Check valve closing completion frequency	439
A447	1363	PID priming time	439
A448	1364	Stirring time during sleep	439
A449	1365	Stirring interval time	439
A450	1374	Auxiliary pressure pump operation starting level	439
A451	1375	Auxiliary pressure pump operation stopping level	439
A452	1377	PID input pressure selection	439
A453	1378	PID input pressure warning level	439
A454	1379	PID input pressure fault level	439
A455	1380	PID input pressure warning set point change amount	439
A456	1381	PID input pressure fault operation selection	439
A600	759	PID unit selection	423
A601	131	PID upper limit	401
A602	132	PID lower limit	401
A603	553	PID deviation limit	401
A604	554	PID signal operation selection	401
A607	1015	Integral stop selection at limited frequency	401
A610	128	PID action selection	401
A611	133	PID action set point	401
A612	127	PID control automatic switchover frequency	401
A613	129	PID proportional band	401
A614	130	PID integral time	401
A615	134	PID differential time	401
A616	760	Pre-charge fault selection	425
A617	761	Pre-charge ending level	425
A618	762	Pre-charge ending time	425
A619	763	Pre-charge upper detection level	425
A620	764	Pre-charge time limit	425
A621	575	Output interruption detection time	401
A622	576	Output interruption detection level	401
A623	577	Output interruption cancel level	401
A624	609	PID set point/deviation input selection	401
A625	610	PID measured value input selection	401
A626	1132	Pre-charge change increment amount	425
A627	1366	Sleep boost level	439
A628	1367	Sleep boost waiting time	439
A629	1368	Output interruption cancel time	439
A630	C42 (934)*1	PID display bias coefficient	423
A631	C43 (934)*1	PID display bias analog value	423
A632	C44 (935)*1	PID display gain coefficient	423
A633	C45 (935)*1	PID display gain analog value	423
A640	1142	Second PID unit selection	401
A641	1143	Second PID upper limit	401
A642	1144	Second PID lower limit	401
A643	1145	Second PID deviation limit	401

上正科技有限公司
購買、維修 此手冊零組件
電話： 037-466333
Email: service@repairtw.com
Line id: @zzzz
www.repairtw.com

Pr. group	Pr.	Name	Refer to page
A644	1146	Second PID signal operation selection	401
A650	753	Second PID action selection	401
A651	755	Second PID action set point	401
A652	754	Second PID control automatic switchover frequency	401
A653	756	Second PID proportional band	401
A654	757	Second PID integral time	401
A655	758	Second PID differential time	401
A656	765	Second pre-charge fault selection	425
A657	766	Second pre-charge ending level	425
A658	767	Second pre-charge ending time	425
A659	768	Second pre-charge upper detection level	425
A660	769	Second pre-charge time limit	425
A661	1147	Second output interruption detection time	401
A662	1148	Second output interruption detection level	401
A663	1149	Second output interruption cancel level	401
A664	1140	Second PID set point/deviation input selection	401
A665	1141	Second PID measured value input selection	401
A666	1133	Second pre-charge change increment amount	425
A670	1136	Second PID display bias coefficient	423
A671	1137	Second PID display bias analog value	423
A672	1138	Second PID display gain coefficient	423
A673	1139	Second PID display gain analog value	423
A680	573	4 mA input check selection	350
A681	777	4 mA input fault operation frequency	350
A682	778	4 mA input check filter	350
A683	1460	PID multistage set point 1	401
A684	1461	PID multistage set point 2	401
A685	1462	PID multistage set point 3	401
A686	1463	PID multistage set point 4	401
A687	1464	PID multistage set point 5	401
A688	1465	PID multistage set point 6	401
A689	1466	PID multistage set point 7	401
A690	1211	PID gain tuning timeout time	417
A691	1212	Step manipulated amount	417
A692	1213	Step responding sampling cycle	417
A693	1214	Timeout time after the maximum slope	417
A694	1215	Limit cycle output upper limit	417
A695	1216	Limit cycle output lower limit	417
A696	1217	Limit cycle hysteresis	417
A697	1218	PID gain tuning setting	417
A698	1219	PID gain tuning start/status	417
A700	162	Automatic restart after instantaneous power failure selection	446, 451, 454
A701	299	Rotation direction detection selection at restarting	446

Pr. group	Pr.	Name	Refer to page
A702	57	Restart coasting time	446, 451
A703	58	Restart cushion time	446
A704	163	First cushion time for restart	446
A705	164	First cushion voltage for restart	446
A710	165	Stall prevention operation level for restart	446
A711	298	Frequency search gain	366, 454
A712	560	Second frequency search gain	454
A730	261	Power failure stop selection	458
A731	262	Subtracted frequency at deceleration start	458
A732	263	Subtraction starting frequency	458
A733	264	Power-failure deceleration time 1	458
A734	265	Power-failure deceleration time 2	458
A735	266	Power failure deceleration time switchover frequency	458
A785	294	UV avoidance voltage gain	458
A786	668	Power failure stop frequency gain	458
A800	414	PLC function operation selection	462
A801	415	Inverter operation lock mode setting	462
A802	416	Pre-scale function selection	462
A803	417	Pre-scale setting value	462
A804	498	PLC function flash memory clear	462
A805	675	User parameter auto storage function selection	462
A810 to A859	1150 to 1199	PLC function user parameters 1 to 50	462
A900	1020	Trace operation selection	465
A901	1021	Trace mode selection	465
A902	1022	Sampling cycle	465
A903	1023	Number of analog channels	465
A904	1024	Sampling auto start	465
A905	1025	Trigger mode selection	465
A906	1026	Number of sampling before trigger	465
A910	1027	Analog source selection (1ch)	465
A911	1028	Analog source selection (2ch)	465
A912	1029	Analog source selection (3ch)	465
A913	1030	Analog source selection (4ch)	465
A914	1031	Analog source selection (5ch)	465
A915	1032	Analog source selection (6ch)	465
A916	1033	Analog source selection (7ch)	465
A917	1034	Analog source selection (8ch)	465
A918	1035	Analog trigger channel	465
A919	1036	Analog trigger operation selection	465
A920	1037	Analog trigger level	465
A930	1038	Digital source selection (1ch)	465
A931	1039	Digital source selection (2ch)	465
A932	1040	Digital source selection (3ch)	465
A933	1041	Digital source selection (4ch)	465
A934	1042	Digital source selection (5ch)	465
A935	1043	Digital source selection (6ch)	465
A936	1044	Digital source selection (7ch)	465
A937	1045	Digital source selection (8ch)	465
A938	1046	Digital trigger channel	465
A939	1047	Digital trigger operation selection	465

上正科技有限公司
購買、維修 此手冊零組件
電話：037-466333
Email: service@repairtw.com
Line id: @zzzz
www.repairtw.com

◆ N: Communication operation parameters

Parameters for the setting of communication operation such as the communication specifications or operating characteristics.

Pr. group	Pr.	Name	Refer to page
N000	549	Protocol selection	478, 511
N001	342	Communication EEPROM write selection	478
N002	539	MODBUS RTU communication check time interval	498
N013	502	Stop mode selection at communication error	478
N014	779	Operation frequency during communication error	478
N020	117	PU communication station number	482
N021	118	PU communication speed	482
N022	119	PU communication data length	482
N023	119	PU communication stop bit length	482
N024	120	PU communication parity check	482
N025	121	PU communication retry count	482
N026	122	PU communication check time interval	482
N027	123	PU communication waiting time setting	482
N028	124	PU communication CR/LF selection	482
N030	331	RS-485 communication station number	482, 511
N031	332	RS-485 communication speed	482, 511
N032	333	RS-485 communication data length	482
N033	333	RS-485 communication stop bit length	482
N034	334	RS-485 communication parity check selection	482
N035	335	RS-485 communication retry count	482
N036	336	RS-485 communication check time interval	482
N037	337	RS-485 communication waiting time setting	482
N038	341	RS-485 communication CR/LF selection	482
N040	547	USB communication station number	523
N041	548	USB communication check time interval	523
N050	726	Auto Baudrate/Max Master	511
N051	727	Max Info Frames	511
N052	728	Device instance number (Upper 3 digits)	511
N053	729	Device instance number (Lower 4 digits)	511
N054	390	% setting reference frequency	511
N080	343	Communication error count	498
N500 to N543, N550 to N559	1300 to 1343, 1350 to 1359	Communication option parameters. For details, refer to the Instruction Manual of the option.	

◆ G: Control parameters

Parameters for motor control.

Pr. group	Pr.	Name	Refer to page
G000	0	Torque boost Simple	527
G001	3	Base frequency Simple	528
G002	19	Base frequency voltage	528
G003	14	Load pattern selection	530
G010	46	Second torque boost	527
G011	47	Second V/F (base frequency)	528
G030	60	Energy saving control selection	532
G040	100	V/F1 (first frequency)	533
G041	101	V/F1 (first frequency voltage)	533
G042	102	V/F2 (second frequency)	533
G043	103	V/F2 (second frequency voltage)	533
G044	104	V/F3 (third frequency)	533
G045	105	V/F3 (third frequency voltage)	533
G046	106	V/F4 (fourth frequency)	533
G047	107	V/F4 (fourth frequency voltage)	533
G048	108	V/F5 (fifth frequency)	533
G049	109	V/F5 (fifth frequency voltage)	533
G060	673	SF-PR slip amount adjustment operation selection	534
G061	674	SF-PR slip amount adjustment gain	534
G080	617	Reverse rotation excitation current low-speed scaling factor	531
G100	10	DC injection brake operation frequency	535
G101	11	DC injection brake operation time	535
G105	522	Output stop frequency	536
G106	250	Stop selection	538
G107	70 *2	Parameter for manufacturer setting. Do not set.	
G110	12	DC injection brake operation voltage	535
G120	882	Regeneration avoidance operation selection	545
G121	883	Regeneration avoidance operation level	545
G122	884	Regeneration avoidance at deceleration detection sensitivity	545
G123	885	Regeneration avoidance compensation frequency limit value	545
G124	886	Regeneration avoidance voltage gain	545
G125	665	Regeneration avoidance frequency gain	545
G130	660	Increased magnetic excitation deceleration operation selection	547
G131	661	Magnetic excitation increase rate	547
G132	662	Increased magnetic excitation current level	547
G200	800	Control method selection	169
G201	85	Excitation current break point	531
G202	86	Excitation current low-speed scaling factor	531
G203	245	Rated slip	548
G204	246	Slip compensation time constant	548
G205	247	Constant output range slip compensation selection	548
G211	820	Speed control P gain 1	182

上正科技有限公司
購買、維修 此手冊零組件
電話： 037-466661
Email: service@repairtw.com
Line id: @zzzz
www.repairtw.com

Pr. group	Pr.	Name	Refer to page
G212	821	Speed control integral time 1	182
G213	824	Torque control P gain 1 (current loop proportional gain)	182
G214	825	Torque control integral time 1 (current loop integral time)	182
G216	827	Torque detection filter 1	185
G224	828	Parameter for manufacturer setting. Do not set.	
G301	565	Second motor excitation current break point	531
G302	566	Second motor excitation current low-speed scaling factor	531
G311	830	Speed control P gain 2	182
G312	831	Speed control integral time 2	182
G313	834	Torque control P gain 2 (current loop proportional gain)	182

Pr. group	Pr.	Name	Refer to page
G314	835	Torque control integral time 2 (current loop integral time)	182
G316	837	Torque detection filter 2	185
G410	653	Speed smoothing control	549
G411	654	Speed smoothing cutoff frequency	549
G932	89	Speed control gain (Advanced magnetic flux vector)	172
G942	569	Second motor speed control gain	172

*1 The parameter number in parentheses is the one for use with the LCD operation panel and the parameter unit.
*2 The setting is available for the standard structure model or the separated converter type.
*3 The setting is available for the standard structure model and the IP55 compatible model.
*4 The setting is available when the PLC function is enabled.

上正科技有限公司
購買、維修 此手冊零組件
電話： 037-466333
Email: service@repairtw.com
Line id: @zzzz
www.repairtw.com

5.2 Control method

V/F control (initial setting), Advanced magnetic flux vector control, and PM motor control are available with this inverter.

◆ V/F control

The inverter controls the output frequency (F) and the output voltage (V) so that the ratio of frequency to voltage (V/F) is kept constant when the frequency is changed.

◆ Advanced magnetic flux vector control

The inverter performs vector calculation and divide its output current into the excitation current and the torque current. The inverter compensates the frequency and the voltage to output a current that meets the load torque to the motor, which improves the motor torque at low speed. The output frequency is further compensated (slip compensation) to bring the actual motor speed closer to the commanded speed. This control method is useful when the load fluctuates are severe.

NOTE

- Advanced magnetic flux vector control requires the following conditions.
  If these conditions are not satisfied, select V/F control. Otherwise, malfunctions such as insufficient torque, uneven rotation may occur.
- For the motor capacity, the rated motor current should be equal to or less than the rated inverter current. (It must be 0.4 kW or higher.)
  If a motor with substantially low rated current compared with the inverter rated current, however, is used, speed and torque accuracies may deteriorate due to torque ripples, etc. Set the rated motor current to about 40% or higher of the inverter rated current.
- The motor described in the following table is used.

Motor	Condition
Mitsubishi Electric standard motor (SF-JR)	The offline auto tuning is not required.
Mitsubishi Electric high-efficiency motor (SF-HR)	
Mitsubishi Electric constant-torque motor (SF-JRCA 4P / SF-HRCA)	
Mitsubishi Electric high-performance energy-saving motor (SF-PR)	
Other motor (Mitsubishi motor SF-TH, etc. or other manufacturer's motor)	The offline auto tuning is required.

- Single-motor operation (one motor to one inverter) is performed.
- The wiring length from inverter to motor is 30 m or less. (When the wiring length exceeds 30 m, perform offline auto tuning with the wiring in place.)
- A sine wave filter (MT-BSL/BSC) is not used.

上正科技有限公司
購買、維修、此手冊零組件
電話： 05/-486333
Email: service@repairtw.com
Line Id: @3333
www.repairtw.com

◆ PM motor control

- The inverter enables highly efficient motor control and highly accurate motor speed control of a PM (permanent magnet embedded) motor, which is more efficient than an induction motor.
- A speed detector such as an encoder is not required as the inverter estimates the motor speed by the calculation from the inverter output voltage and current. The inverter drives the PM motor with the least required current for a load in order to achieve the highest motor efficiency.
- When using an IPM motor MM-EFS or MM-THE4, simply performing the motor parameter initialization (PM parameter initialization or IPM initialization) enables PM motor control.

PM motor control image

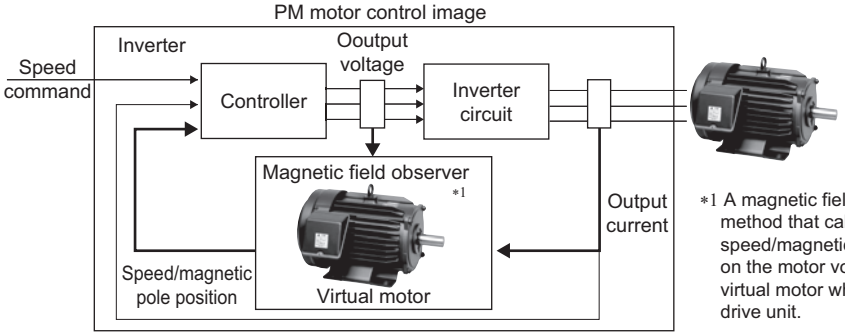

*1 A magnetic field observer is a control method that calculates the motor speed/magnetic pole position based on the motor voltage and current of a virtual motor which is set up in the drive unit.

NOTE

- The PM motor control requires the following conditions.
- The motor described in the following table is used.

Motor	Condition
Mitsubishi Electric IPM motor (MM-EFS or MM-THE4)	The offline auto tuning is not required.
IPM motor (other than MM-EFS or MM-THE4), SPM motor	The offline auto tuning is required.

上正科技有限公司
購買、維修、此手冊零組件
電話： 037-466333
Email: service@repairtw.com
Line id: @3333
www.repairtw.com

- For the motor capacity, the rated motor current should be equal to or less than the rated inverter current. (It must be 0.4 kW or higher.)
  If a motor with substantially low rated current compared with the inverter rated current, however, is used, speed and torque accuracies may deteriorate due to torque ripples, etc. Set the rated motor current to about 40% or higher of the inverter rated current.
- Single-motor operation (one motor to one inverter) is performed.
- The wiring length from the inverter to the motor is 100 m or less. (Refer to page 55.) (When the wiring length from the inverter to the IPM motor MM-EFS or MM-THE4 exceeds 30 m, perform offline auto tuning.)
- A surge voltage suppression filter (FR-ASF/FR-BMF) or sine wave filter (MT-BSL/BSC) is not used.

5.2.1 Changing the control method and mode

Set the control method.

V/F control, Advanced magnetic flux vector control, and PM motor control are the control methods available for selection.

When using an IPM motor MM-EFS or MM-THE4, simply performing the motor parameter initialization (PM parameter initialization or IPM initialization) enables PM motor control.

- The PM motor test operation can be performed by setting **Pr.800 Control method selection**.

Pr.	Name	Initial value	Setting range	Description
71 **C100**	**Applied motor**	0	0 to 6, 13 to 16, 20, 23, 24, 40, 43, 44, 50, 53, 54, 70, 73, 74, 210, 213, 214, 240, 243, 244, 8090, 8093, 8094, 9090, 9093, 9094	By selecting a standard motor or constant-torque motor, the thermal characteristic and motor constant of each motor are set.
80 **C101**	**Motor capacity**	9999	0.4 to 55 kW[*1]	Set the applied motor capacity.
			0 to 3600 kW[*2]	
			9999	V/F control
81 **C102**	**Number of motor poles**	9999	2, 4, 6, 8, 10, 12	Set the number of motor poles.
			9999	V/F control
83 **C104**	**Rated motor voltage**	200/400 V[*3]	0 to 1000 V	Set the rated motor voltage (V).
84 **C105**	**Rated motor frequency**	9999	10 to 400 Hz	Set the rated motor frequency (Hz).
			9999	The setting value of **Pr.3 Base frequency** is used.[*4]
800 **G200**	**Control method selection**	20	9	PM motor test operation (Motor is not driven even if it is connected.)
			20	Normal operation (Motor can be driven.)

*1 For the FR-F820-02330(55K) or lower and FR-F840-01160(55K) or lower.

*2 For the FR-F820-03160(75K) or higher and FR-F840-01800(75K) or higher.

*3 The initial value differs according to the inverter's voltage class (200/400 V class).

*4 When the IPM motor MM-EFS or MM-THE4 is selected in **Pr.71 Applied motor**, the rated frequency of the MM-EFS or MM-THE4 is used. When a PM motor other than the MM-EFS or MM-THE4 is selected in **Pr.71**, 75 Hz (for the motor capacity of 15 kW or lower) or 100 Hz (for 18.5 kW or higher) is used.

上正科技有限公司
購買、維修 此手冊零組件
電話: 0937 763 833
Email: service@repairtw.com
Line id: @zzzz
www.repairtw.com

◆ Setting the motor capacity and the number of motor poles (Pr.80, Pr.81)

- Motor specifications (the motor capacity and the number of motor poles) must be set to select Advanced magnetic flux vector control or PM motor control.
- Set the motor capacity (kW) in **Pr.80 Motor capacity** and set the number of motor poles in **Pr.81 Number of motor poles**.

NOTE

- Setting the number of motor poles in **Pr.81** automatically changes the setting of **Pr.144 Speed setting switchover**. (Refer to page 286.)

◆ PM motor test operation (Pr.800 = "9")

- A test operation for speed control is available without connecting a motor to the inverter.
  The speed calculation changes to track the speed command, and such speed changes can be checked on the operation panel or by outputting it as analog signals to terminal FM/CA or AM.

NOTE

- Since current is not detected and voltage is not output, monitors related to current and voltage such as output current and output voltage, etc. and output signals do not function.

◆ I/O signal status during the test operation

- During the test operation, the following signals are disabled.

■ Input terminal function selection (Pr.178 to Pr.189)

- V/F switchover (X18) signal

- Start-time tuning start external input (X28) signal

■ Output terminal function selection (Pr.190 to Pr.196)

- Electronic thermal O/L relay pre-alarm (THP) signal
- Start time tuning completion (Y39) signal

Parameters referred to
Pr.178 to Pr.189 (Input terminal function selection) ☞ page 355
Pr.190 to Pr.196 (Output terminal function selection) ☞ page 312

◆ Status of the monitoring during the test operation

○: Enabled

×: Disabled (0 is displayed at any time.)

Δ: A cumulative total before the test operation is displayed.

—: Not available

Monitor item	Monitoring on DU/PU	Output via terminal FM/CA/AM
Output frequency	○	○
Fault indication	○	—
Frequency setting value	○	○
Motor speed	○	○
Converter output voltage	○	○
Electronic thermal O/L relay load factor	×*2	×*2
Output current peak value	×*2	×*2
Converter output voltage peak value	○	○
Load meter	○	○
Cumulative energization time	○	—
Reference voltage output	—	○
Actual operation time	○	—
Cumulative energy	Δ	—
Trace status	○	×
Station number (RS-485 terminals)	○	—
Station number (PU connector)	○	—
Station number (CC-Link)	○	—
Energy saving effect	○	○
Cumulative energy saving	Δ	—
PID set point	○	○
PID measured value	○	○

Monitor item	Monitoring on DU/PU	Output via terminal FM/CA/AM
PID deviation	○	○*3
Input terminal status	○	—
Output terminal status	○	—
Option input terminal status	○	—
Option output terminal status	○	—
Motor thermal load factor	○*4	○*4
Inverter thermal load factor	○*4	○*4
PTC thermistor value	○	—
PID measured value 2	○	○
PID input pressure value	○	○
Remote output 1	○	○
Remote output 2	○	○
Remote output 3	○	○
Remote output 4	○	○
PID manipulated variable	○	○*3
Second PID set point	○	○
Second PID measured value	○	○
Second PID deviation	○	○*3
Second PID measured value 2	○	○
Second PID manipulated variable	○	○*3

上正科技有限公司
購買、維修 此手冊零組件
電話： 037-466233
Email: service@repairtw.com
Line id: @zzzz
www.repairtw.com

*1 The monitoring-enabled items differ depending on the output interface (operation panel, parameter unit, terminal FM/CA, or terminal AM). For the details, refer to page 297.

*2 When the inverter operation is switched to the test operation, the indication is changed to 0. When PM motor control is selected again after the test operation, the output current peak value and the electronic thermal relay load factor from the last operation are displayed.

*3 The output is enabled via terminal AM only.

*4 When the inverter operation is switched to the test operation, the accumulated thermal value is reduced because the output current is considered as 0.

Parameters referred to
Pr.52 Operation panel main monitor selection ☞ page 288
Pr.158 AM terminal function selection ☞ page 297

◆ Changing the control method with external terminals (RT signal, X18 signal)

- Control method (V/F control or Advanced magnetic flux vector control) can be switched using external terminals.
  The control method can be switched using either the Second function selection (RT) signal or the V/F switchover (X18) signal.
- When using the RT signal, set the second motor in **Pr.450 Second applied motor**. Turning ON the RT signal enables the second function, enabling the switchover of the control method.

- When using the X18 signal, turning ON the X18 signal switches the presently-selected control method (Advanced magnetic flux vector control) to the V/F control. Use this method to switch the control method for one motor. At this time, the second functions including the electronic thermal O/L relay characteristic are not changed. (To switch the second functions, use the RT signal.)
  To input the X18 signal, set "18" in any of **Pr.178 to Pr.189 (Input terminal function selection)** to assign the function to the terminal.

First motor control method	Second motor control method (RT signal-ON)	Pr.450 setting	Pr.453, Pr.454 settings
V/F control	V/F control	9999	—
		—	9999*2
	Advanced magnetic flux vector control	Induction motor	Other than 9999
	PM motor control	IPM/SPM motor	
Advanced magnetic flux vector control*1 PM motor control	Same control as the first motor*1	9999	—
	V/F control	—	9999*2
	Advanced magnetic flux vector control	Induction motor	Other than 9999
	PM motor control	IPM/SPM motor	

*1 V/F control is set by turning ON the X18 signal. If the X18 signal is unassigned, the RT signal performs the same function; Turning ON the RT signal selects V/F control.

*2 V/F control is set when **Pr.453** or **Pr.454** is set to "9999". When **Pr.450** is set to the IPM motor MM-EFS or MM-THE4, PM motor control is enabled even if **Pr.453** ≠ "9999" and **Pr.454** = "9999".

NOTE

- The RT signal is assigned to the terminal RT in the initial status. Set "3" in one of **Pr.178 to Pr.189 (Input terminal function selection)** to assign the RT signal to another terminal.
- The RT signal is the Second function selection signal. The RT signal also enables other second functions. (Refer to page 358.)
- The control method could be changed by external terminals (RT signal, X18 signal) while the inverter is stopped. If a signal is switched during the operation, the control method changes after the inverter stops.

上揚科技有限公司
購買、維修 此手冊零組件
電話： 037-466333
Email: service@repairtw.com
Line id: @zzzz
www.repairtw.com

Parameters referred to

Pr.178 to Pr.189 (Input terminal function selection) ☞ page 355
Pr.450 Second applied motor ☞ page 362

5.2.2 Selecting the Advanced magnetic flux vector control

Magnetic flux

Point

- To use the Advanced magnetic flux vector control, set the motor capacity, the number of motor poles, and the motor type using Pr.80 and Pr.81.

◆ Advanced magnetic flux vector control

Operating procedure

1. Perform secure wiring. (Refer to page 43.)

2. Make the motor setting (**Pr.71**).

Motor		Pr.71 setting[*1]	Remarks
Mitsubishi Electric standard motor Mitsubishi Electric high-efficiency motor	SF-JR	0 (initial value) (3, 4)	
	SF-JR 4P 1.5 kW or lower	20	
	SF-HR	40	
	Others	0 (3)	Offline auto tuning is required.[*2]
Mitsubishi Electric constant-torque motor	SF-JRCA 4P	1	
	SF-HRCA	50	
	Other (SF-JRC, etc.)	1 (13)	Offline auto tuning is required.[*2]
Mitsubishi Electric high-performance energy-saving motor	SF-PR	70	
Other manufacturer's standard motor	—	0 (3)	Offline auto tuning is required.[*2]
Other manufacturer's constant-torque motor	—	1 (13)	Offline auto tuning is required.[*2]

*1 For the other setting values of **Pr.71**, refer to page 362.
*2 For offline auto tuning, refer to page 366.

正正科技有限公司
購買、維修 此手冊零組件
電話： 037-46633
Email: service@repairtw.com
www.repairtw.com

3. Set the motor overheat protection (**Pr.9**). (Refer to page 252.)

4. Set the motor capacity and number of motor poles (**Pr.80, Pr.81**). (Refer to page 169.)
V/F control is performed when the setting is "9999" (initial value).

5. Set the rated motor voltage and frequency (**Pr.83, Pr.84**). (Refer to page 366.)

6. Set the operation command. (Refer to page 228.)
Select the start command and speed command.

7. Perform the test operation.

As required

- Perform the offline auto tuning (**Pr.96**). (Refer to page 366.)
- Select the online auto tuning (**Pr.95**). (Refer to page 382.)

NOTE

- Under this control, rotations are more likely to be uneven than under V/F control. (This control method is not suitable for grinder, wrapping machine, etc., which require even rotation at a low speed.)
- For the FR-F820-02330(55K) or lower and the FR-F840-01160(55K) or lower, the operation with a surge voltage suppression filter (FR-ASF-H/FR-BMF-H) installed between the inverter and the motor may reduce the output torque.
- The optional sine wave filter (MT-BSL/BSC) cannot be used between the inverter and the motor.
- Changing the terminal assignment using **Pr.178 to Pr.189 (Input terminal function selection)** may affect the other functions. Set parameters after confirming the function of each terminal.

◆ Keeping the motor speed constant when the load fluctuates (speed control gain)

Pr.	Name	Initial value	Setting range	Description
89 G932	**Speed control gain (Advanced magnetic flux vector)**	9999	0 to 200%	Makes adjustments to keep the motor speed constant during variable load operation under Advanced magnetic flux vector control. The reference value is 100%.
			9999	The gain set by **Pr.71**. (The gain set in accordance with the motor.)
569 G942	**Second motor speed control gain**	9999	0 to 200%	Makes adjustments to keep the second motor speed constant during variable load operation under Advanced magnetic flux vector control. The reference value is 100%.
			9999	The gain set by **Pr.450.** (The gain set in accordance with the motor.)

- Use **Pr.89** to keep the motor speed constant during variable load operation.
  (This parameter is useful to adjust the motor speed.)

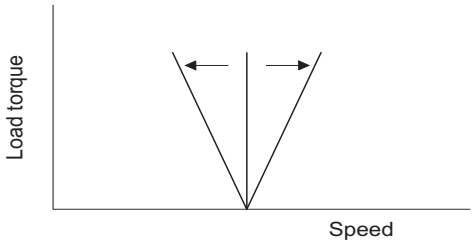

◆ Driving two motors under Advanced magnetic flux vector control

- Turning ON the Second function selection (RT) signal enables the second motor operation.
- Set a second motor in **Pr.450 Second applied motor**. (In the initial setting, "9999" (no second applied motor) is selected. Refer to page 362.)

上正科技有限公司
購買、維修 此手冊零組件
電話：037-466333
Email: service@repairtw.com
Line id: @zzzz
www.repairtw.com

Function	RT signal-ON (second motor)	RT signal-OFF (first motor)
Applied motor	**Pr.450**	**Pr.71**
Motor capacity	**Pr.453**	**Pr.80**
Number of motor poles	**Pr.454**	**Pr.81**
Speed control gain (Advanced magnetic flux vector)	**Pr.569**	**Pr.89**

NOTE

- The RT signal is the Second function selection signal. The RT signal also enables other second functions. (Refer to page 358.) The RT signal is assigned to terminal RT in the initial status. Set "3" in one of **Pr.178 to Pr.189 (Input terminal function selection)** to assign the RT signal to another terminal.
- Changing the terminal assignment using **Pr.178 to Pr.189 (Input terminal function selection)** may affect the other functions. Set parameters after confirming the function of each terminal.

Parameters referred to

Pr.71, Pr.450 Applied motor ☞ page 362
Pr.800 Control method selection ☞ page 169

5.2.3 Selecting the PM motor control

PM

◆ Setting for the PM motor control by selecting IPM initialization ("1 PM") on the operation panel

Point

- The parameters required to drive an IPM motor MM-EFS or MM-THE4 are automatically set by batch. (Refer to page 177.)
- [PM] indicator on the operation panel (FR-DU08) is turned ON when the PM motor control is set.

The following shows the procedure to perform the motor parameter initialization (change the parameter settings to the appropriate settings for an IPM motor MM-EFS (1500 r/min specification) or MM-THE4) by selecting IPM initialization on the operation panel.

Operating procedure

1. Turning ON the power of the inverter

The operation panel is in the monitor mode.

2. Changing the operation mode

Press [PU EXT] to choose the PU operation mode.

[PU] indicator turns ON.

上正科技有限公司
購買、維修 此手冊零組件
電話： 037-466333
Email: service@repairtw.com
Line id: @zzzz
www.repairtw.com

3. Selecting the parameter setting mode

Press [MODE] to choose the parameter setting mode.

[PRM] indicator is ON.

4. Selecting IPM initialization

Turn ⊛ until "1 PM" (IPM initialization) appears.

5. Displaying the set value

Press [SET] to read the present set value.

"0" (initial value) appears.

6. Changing the setting value

Turn ⊛ to change the value to " 12 ", and press [SET] to confirm it.

" 12 " and "1 PM" are displayed alternately. The setting is completed.

Setting	Description
0	Parameter settings for an induction motor
12*1	Parameter setting (in rotations per minute) for the IPM motor MM-EFS (1500 r/min specification) or MM-THE4
14*1	Parameter setting (in rotations per minute) for the IPM motor MM-EFS (3000 r/min specification)

*1 The setting is available for the standard structure model or the separated converter type.

NOTE

- If the motor parameter initialization is performed by using IPM initialization for the use of a PM motor, the setting of **Pr.998 PM parameter initialization** is also changed automatically.
- To set a speed by adjusting frequencies or to monitor it, use **Pr.998**. (Refer to page 175.)
- When **Pr.998** = "112 or 114", IPM initialization setting is displayed as "12 or 14".

◆ Motor parameter initialization for PM motor control (Pr.998)

- Use PM parameter initialization to set the parameters required for driving an IPM motor MM-EFS or MM-THE4.
- The offline auto tuning enables the operation with an IPM motor other than the MM-EFS or MM-THE4 and with SPM motors.
- Two methods of the motor parameter initialization are available for the use of MM-EFS or MM-THE4 motor; using **Pr.998 PM parameter initialization**, and using IPM initialization (1 PM).

Pr.	Name	Initial value	Setting range	Description	
998 E430	PM parameter initialization	0	0	Parameter setting (in frequencies) for an induction motor	The setting of the motor parameters is changed to the setting required to drive an induction motor.
			12*1	Parameter setting (in rotations per minute) for the IPM motor MM-EFS (1500 r/min specification) or MM-THE4	The setting of the motor parameters is changed to the setting required to drive an IPM motor.
			14*1	Parameter setting (in rotations per minute) for the IPM motor MM-EFS (3000 r/min specification)	
			112*1	Parameter setting (in frequencies) for the IPM motor MM-EFS (1500 r/min specification) or MM-THE4	
			114*1	Parameter setting (in frequencies) for the IPM motor MM-EFS (3000 r/min specification)	
			8009	Parameter setting (in rotations per minute) for an IPM motor other than the MM-EFS or MM-THE4 (after tuning)	The setting of the motor parameters is changed to the setting required to drive an IPM motor. (Set **Pr.71 Applied motor** and perform offline auto tuning in advance. (Refer to page 375.))
			8109	Parameter setting (in frequencies) for an IPM motor other than the MM-EFS or MM-THE4 (after tuning)	
			9009	Parameter setting (in rotations per minute) for an SPM motor (after tuning)	The setting of the motor parameters is changed to the setting required to drive an SPM motor. (Set **Pr.71 Applied motor** and perform offline auto tuning in advance. (Refer to page 375.))
			9109	Parameter setting (in frequencies) for an SPM motor (after tuning)	

*1 The setting is available for the standard structure model or the separated converter type.

上達科技有限公司
購買、維修、出售各種零組件
電話：03-466333
Email: service@repairtw.com
Line id: @zzzz
www.repairtw.com

- To use a motor capacity that is one rank lower than the inverter capacity, set **Pr.80 Motor capacity** before performing PM parameter initialization.
- When "12, 14, 8009, or 9009" is set in **Pr.998**, the motor speed which was set/monitored in frequencies is set/monitored in motor rotations per minute. To set/monitor in frequencies, set "112, 114, 8109, or 9109" in **Pr.998**.
- To change the setting of motor parameters for PM motor control to the setting required to drive an induction motor, set "0" in **Pr.998**.
- When using an IPM motor other than the MM-EFS or MM-THE4 or an SPM motor, set "8009, 8109, 9009, or 9109" in **Pr.998**.

NOTE

- Make sure to set **Pr.998** before setting other parameters. If the **Pr.998** setting is changed after setting other parameters, some of those parameters are initialized too. (Refer to page 177 for the parameters that are initialized.)
- To change back to the parameter settings required to drive an induction motor, perform Parameter clear or All parameter clear.
- Whenever the setting of **Pr.998 PM parameter initialization** is changed from "12, 14, 8009, or 9009" (setting/monitoring in rotations per minute) to "112, 114, 8109, 9109" (setting/monitoring in frequencies), and vice versa, the motor parameters are changed.
  The purpose of this parameter is not to change the setting/monitoring unit. Use **Pr.144 Speed setting switchover** just to change the unit between rotations per minute and frequencies. Using **Pr.144** enables switching the unit between rotations per minute and frequencies without initializing the setting of the motor parameters.
  Example) Changing the **Pr.144** setting between "6" and "106" switches the setting/monitoring unit between frequencies and rotations per minute.
- For an inverter out of the capacity range of the IPM motor MM-EFS or MM-THE4, the settings "12, 14, 112, and 114" are disabled. (Refer to page 615 and page 618 for the capacity of the MM-EFS or MM-THE4.)
- **PM parameter initialization (Pr.998)** is used for change of parameter settings for use of a PM motor as the first motor. When a PM motor is used as the second motor, the motor parameters for the second motor must be set individually.

上正科技有限公司
購買、維修 此手冊零組件
電話： 037-466333
Email: service@repairtw.com
Line id: @zzzz
www.repairtw.com

◆ List of the target parameters for the motor parameter initialization

- The setting of the parameters in the following table is changed to the setting for PM motor control by performing the motor parameter initialization using IPM initialization or **Pr.998 PM parameter initialization**. The changed settings differ according to the specification (capacity) of the PM motor used.
- Performing Parameter clear or All parameter clear resets these parameter settings to the settings required to drive an induction motor.

Pr.	Name	Setting								Setting increments	
		Induction motor		PM motor (setting in rotations per minute)			PM motor (setting in frequencies)				
		0 (initial value)		12	14	8009 9009	112	114	8109 9109	12, 14, 8009, 9009	0, 112, 114, 8109, 9109,
		FM	CA								
1	Maximum frequency	120 Hz[*1] 60 Hz[*2]		Maximum motor rotations per minute		Maximum motor rotations per minute[*6]	Maximum motor frequency		Maximum motor frequency[*6]	1 r/min	0.01 Hz
4	Multi-speed setting (high speed)	60 Hz	50 Hz	Rated motor rotations per minute		**Pr.84**	Rated motor frequency		**Pr.84**	1 r/min	0.01 Hz
9	Electronic thermal O/L relay	Inverter rated current		Rated motor current[*8]		—	Rated motor current[*8]		—	0.01 A[*1] 0.1 A[*2]	
13	Starting frequency	0.5 Hz		Minimum rotations per minute		**Pr.84** × 10%	Minimum frequency		**Pr.84** × 10%	1 r/min	0.01 Hz
15	Jog frequency	5 Hz		Minimum rotations per minute		**Pr.84** × 10%	Minimum frequency		**Pr.84** × 10%	1 r/min	0.01 Hz
18	High speed maximum frequency	120 Hz[*1] 60 Hz[*2]		Maximum motor rotations per minute		—	Maximum motor frequency		—	1 r/min	0.01 Hz
20	Acceleration/deceleration reference frequency	60 Hz	50 Hz	Rated motor rotations per minute		**Pr.84**	Rated motor frequency		**Pr.84**	1 r/min	0.01 Hz
22	Stall prevention operation level	120%[*5]	110%[*5]	Short-time motor torque						0.1%	
37	Speed display	0		0						1	
55	Frequency monitoring reference	60 Hz	50 Hz	Rated motor rotations per minute		**Pr.84**	Rated motor frequency		**Pr.84**	1 r/min	0.01 Hz
56	Current monitoring reference	Inverter rated current		Rated motor current[*8]		**Pr.859**	Rated motor current[*8]		**Pr.859**	0.01 A[*1] 0.1 A[*2]	
71	Applied motor	0		210[*3]	240[*3]	—	210[*3]	240[*3]	—	1	
80	Motor capacity	9999		Inverter capacity[*4]		—	Inverter capacity[*4]		—	0.01 kW[*1] 0.1 kW[*2]	
81	Number of motor poles	9999		Number of motor poles[*4]		—	Number of motor poles[*4]		—	1	
84	Rated motor frequency	9999		Rated motor rotations per minute[*4]		—	Rated motor frequency[*4]		—	1 r/min	0.01 Hz
125 (903)	Terminal 2 frequency setting gain frequency	60 Hz	50 Hz	Rated motor rotations per minute		**Pr.84**	Rated motor frequency		**Pr.84**	1 r/min	0.01 Hz
126 (905)	Terminal 4 frequency setting gain frequency	60 Hz	50 Hz	Rated motor rotations per minute		**Pr.84**	Rated motor frequency		**Pr.84**	1 r/min	0.01 Hz
144	Speed setting switchover	4		Number of motor poles + 100		**Pr.81** +100	Number of motor poles		**Pr.81**	1	
240	Soft-PWM operation selection	1		0						1	

上正科技有限公司
購買、維修 此手冊零組件
電話： 037-466333
Email: sample@repairtw.com
Line id: @zzzz
www.repairtw.com

Pr.	Name	Setting								Setting increments	
		Induction motor		PM motor (setting in rotations per minute)			PM motor (setting in frequencies)				
		0 (initial value)		12	14	8009 9009	112	114	8109 9109	12, 14, 8009, 9009	0, 112, 114, 8109, 9109,
		FM	CA								
263	Subtraction starting frequency	60 Hz	50 Hz	Rated motor rotations per minute		**Pr.84**	Rated motor frequency		**Pr.84**	1 r/min	0.01 Hz
266	Power failure deceleration time switchover frequency	60 Hz	50 Hz	Rated motor rotations per minute		**Pr.84**	Rated motor frequency		**Pr.84**	1 r/min	0.01 Hz
374	Overspeed detection level	9999		Motor rotations per minute at overspeed detection level		Maximum motor rotations per minute + 10 Hz*6*7	Motor frequency at overspeed detection level		Maximum motor frequency + 10 Hz*6	1 r/min	0.01 Hz
390	% setting reference frequency	60 Hz	50 Hz	Rated motor rotations per minute		**Pr.84**	Rated motor frequency		**Pr.84**	1 r/min	0.01 Hz
505	Speed setting reference	60 Hz	50 Hz	Rated motor frequency		**Pr.84**	Rated motor frequency		**Pr.84**	0.01 Hz	
557	Current average value monitor signal output reference current	Inverter rated current		Rated motor current*8		**Pr.859**	Rated motor current*8		**Pr.859**	0.01 A*1 0.1 A*2	
870	Speed detection hysteresis	0 Hz		Motor rotations per minute at speed detection hysteresis		0.5 Hz*7	Motor frequency at speed detection hysteresis		0.5 Hz	1 r/min	0.01 Hz
885	Regeneration avoidance compensation frequency limit value	6 Hz		Minimum rotations per minute		**Pr.84** × 10%	Minimum frequency		**Pr.84** × 10%	1 r/min	0.01 Hz
893	Energy saving monitor reference (motor capacity)	Inverter rated capacity		Motor capacity (**Pr.80**)						0.01 kW*1 0.1 kW*2	
C14 (918)	Terminal 1 gain frequency (speed)	60 Hz	50 Hz	Rated motor rotations per minute		**Pr.84**	Rated motor frequency		**Pr.84**	1 r/min	0.01 Hz

—: Not changed

*1 Initial value for the FR-F820-02330(55K) or lower and FR-A840-01160(55K) or lower.

*2 Initial value for the FR-F820-03160(75K) or higher and FR-F840-01800(75K) or higher.

*3 When **Pr.71 Applied motor** = "213, 214, 243, 244, 8093, 8094, 9093, or 9094", the **Pr.71** setting is not changed.

*4 When a value other than "9999" is set, the set value is not changed.

*5 110% for SLD rating and 120% for LD rating (Refer to **Pr.570 Multiple rating setting** on page 194.)

*6 Use **Pr.702 Maximum motor frequency** to set the maximum motor frequency or rotations per minute. When **Pr.702** ="9999 (initial value)", the setting of **Pr.84 Rated motor frequency** is used as the maximum motor frequency or rotations per minute.

*7 The setting value is converted from frequency to rotations per minute. (It differs according to the number of motor poles.)

*8 Refer to page 615 for the rated motor current of MM-EFS/MM-THE4.

NOTE

- When the motor parameter initialization is performed with the setting in units of rotations per minute (**Pr.998** = "12, 14, 8009, or 9009"), the parameters not listed in the table and the monitor items are also set and displayed in rotations per minute.

■ IPM motor specification list

Item	MM-EFS 1500 r/min spec. (15 kW or lower)	MM-EFS 1500 r/min spec. (18.5 to 55 kW))	MM-THE4 (75 to 160 kW)
Rated motor frequency (rotations per minute)	75 Hz (1500 r/min)	100 Hz (1500 r/min)	75 Hz (1500 r/min)
Maximum motor frequency (rotations per minute)	112.5 Hz (2250 r/min)	150 Hz (2250 r/min)	90 Hz (1800 r/min)
Number of motor poles	6	8	6
Short-time motor torque	110% for SLD rating, 120% for LD rating		
Minimum frequency (rotations per minute)	7.5 Hz (150 r/min)	10 Hz (150 r/min)	7.5 Hz (150 r/min)
Speed detection hysteresis frequency (rotations per minute)	0.5 Hz (10 r/min)	0.5 Hz (8 r/min)	0.5 Hz (10 r/min)
Overspeed detection level frequency (rotations per minute)	122.5 Hz (2450 r/min)	160 Hz (2400 r/min)	100 Hz (2000 r/min)

上海科技有限公司
購買 維修 此手冊零組件
電話 0975 033
Email: service@repairtw.com
Line id: @zzzz
www.repairtw.com

Item	MM-EFS 3000 r/min spec. (15 kW or lower)
Rated motor frequency (rotations per minute)	150 Hz (3000 r/min)
Maximum motor frequency (rotations per minute)	200 Hz (4000 r/min)
Number of motor poles	6
Short-time motor torque	110% for SLD rating, 120% for LD rating
Minimum frequency (rotations per minute)	15 Hz (300 r/min)
Speed detection hysteresis frequency (rotations per minute)	0.5 Hz (10 r/min)
Overspeed detection level frequency (rotations per minute)	210 Hz (4200 r/min)

上正科技有限公司
購買、維修 此手冊零組件
電話： 037-466333
Email: service@repairtw.com
Line id: @zzzz
www.repairtw.com

5.3 Speed control under PM motor control

Purpose	Parameter to set			Refer to page
To adjust the gain for PM motor control	Speed control gain adjustment	P.G211 to P.G214, P.G311 to P.G314	Pr.820, Pr.821, Pr.824, Pr.825, Pr.830, Pr.831, Pr.834, Pr.835	182
To stabilize torque feedback signal	Torque detection filter	P.G216, P.G316	Pr.827, Pr.837	185

Speed control performs control so that the speed command and the actual motor rotation speed match.

5.3.1 Setting procedure of PM motor control

PM

This inverter is set for a general-purpose motor in the initial setting. Follow the following procedure to change the setting for the PM motor control.

◆ Driving the IPM motor MM-EFS or MM-THE4 (standard structure models)

Operating procedure

1. Performing the motor parameter initialization (Refer to page 174.)

Set "12, 14, 112, or 114" in **Pr.998 PM parameter initialization**, or select "I PM" (IPM initialization) and set "12 or 14" on the operation panel.

上正科技有限公司
購買、維修 此手冊參考用
電話: 0972-103-203
Email: service@repairtw.com
Line id: @2222
www.repairtw.com

Setting	Description
12	Parameter setting (in rotations per minute) for the IPM motor MM-EFS (1500 r/min specification) or MM-THE4
112	Parameter setting (in frequencies) for the IPM motor MM-EFS (1500 r/min specification) or MM-THE4
14	Parameter setting (in rotations per minute) for the IPM motor MM-EFS (3000 r/min specification)
114	Parameter setting (in frequencies) for the IPM motor MM-EFS (3000 r/min specification)

2. Parameter setting (acceleration/deceleration time, multi-speed setting, etc.)

Set parameters such as the acceleration/deceleration time and multi-speed setting as required.

3. Operation command setting (Refer to page 228.)

Select the start command and speed command.

4. Perform the test operation.

When using the MM-EFS or MM-THE4, perform offline auto tuning for a PM motor as required. (Refer to page 375)

◆ Driving a PM motor other than the MM-EFS or MM-THE4

Operating procedure

1. Motor settings (**Pr.9, Pr.71, Pr.80, Pr.81, Pr.83**, and Pr.84) (Refer to page 362, page 375.)
Set "8093 (IPM motor other than MM-EFS or MM-THE4) or 9093 (SPM motor)" in **Pr.71 Applied motor**. Set **Pr.9 Rated motor current, Pr.80 Motor capacity, Pr.81 Number of motor poles, Pr.83 Rated motor voltage**, and **Pr.84 Rated motor frequency** according to the motor specifications.

2. Performing the offline auto tuning for a PM motor (**Pr.96**) (Refer to page 375.)
Set "1" (offline auto tuning without rotating motor (for other than MM-EFS or MM-THE4)) in **Pr.96**, and perform tuning.

3. Initial setting for the PM motor control using **Pr.998** (Refer to page 175.)
When the setting for the PM motor is selected in **Pr.998 PM parameter initialization**, the settings for PM motor control is enabled. [PM] on the operation panel (FR-DU08) turns ON when PM parameter initialization is set.

Setting	Description
8009	Parameter setting (in rotations per minute) for an IPM motor other than the MM-EFS or MM-THE4
8109	Parameter setting (in frequencies) for an IPM motor other than the MM-EFS or MM-THE4
9009	Parameter settings (in rotations per minute) for an SPM motor
9109	Parameter settings (in frequencies) for an SPM motor

4. Parameter setting (acceleration/deceleration time, multi-speed setting, etc.)
Set parameters such as the acceleration/deceleration time and multi-speed setting as required.

5. Operation command setting (Refer to page 228.)
Select the start command and speed command.

6. Perform the test operation.

上正科技有限公司
購買、維修 此手冊零組件
電話： 037-466333
Email: service@repairtw.com
Line id: @zzzz
www.repairtw.com

NOTE

- To change to the PM motor control, perform PM parameter initialization at first. If the parameter initialization is performed after setting other parameters, some of those parameters are initialized too. (Refer to page 177 for the parameters that are initialized.)
- Constant-speed operation cannot be performed in the low-speed range of 150 r/min or less.
- During PM motor control, the RUN signal is output about 100 ms after turning ON the start command (STF/STR). The delay is due to the magnetic pole detection.
- During PM motor control, the function of the automatic restart after instantaneous power failure works only when an IPM motor MM-EFS or MM-THE4 is connected.
  When a regeneration unit is used, the frequency search may not be available if the rotation speed is about 10% higher than the rated speed.

5.3.2 Performing high-accuracy, fast-response control (gain adjustment for PM motor control)

PM

Manual gain adjustment is useful for achieving optimum machine performance or improving unfavorable conditions, such as vibration and acoustic noise during operation with high load inertia or gear backlash.

Pr.	Name	Initial value	Setting range	Description
820 G211	**Speed control P gain 1**	25%	0 to 1000%	The proportional gain during speed control is set. (Setting this parameter higher improves the trackability for speed command changes. It also reduces the speed fluctuation caused by external disturbance.)
821 G212	**Speed control integral time 1**	0.333 s	0 to 20 s	The integral time during speed control is set. (Setting this parameter lower shortens the return time to the original speed when the speed fluctuates due to external disturbance.)
824 G213	**Torque control P gain 1 (current loop proportional gain)**	50%	0 to 500%	The proportional gain of the current controller is set.
825 G214	**Torque control integral time 1 (current loop integral time)**	40 ms	0 to 500 ms	The integral time of the current controller is set.
830 G311	**Speed control P gain 2**	9999	0 to 1000%	Second function of **Pr.820** (enabled when the RT signal is ON)
			9999	The **Pr.820** setting is applied to the operation.
831 G312	**Speed control integral time 2**	9999	0 to 20 s	Second function of **Pr.821** (enabled when the RT signal is ON)
			9999	The **Pr.821** setting is applied to the operation.
834 G313	**Torque control P gain 2 (current loop proportional gain)**	9999	0 to 500%	Second function of **Pr.824** (enabled when the RT signal is ON)
			9999	The **Pr.824** setting is applied to the operation.
835 G314	**Torque control integral time 2 (current loop integral time)**	9999	0 to 500 ms	Second function of **Pr.825** (enabled when the RT signal is ON)
			9999	The **Pr.825** setting is applied to the operation.

上正科技有限公司
購買、維修、代工零組件
電話： 037-466333
Email: service@repairtw.com
Line id: @zzzz
www.repairtw.com

◆ Adjusting the speed control gain manually

- The speed control gain can be adjusted for the conditions such as abnormal machine vibration, acoustic noise, slow response, and overshoot.
- Setting 25% (initial value) in **Pr.820 Speed control P gain 1** is equivalent to 50 rad/s (speed response of a single motor). (Equivalent to the half the rad/s value with the FR-F820-03160(75K) or higher and FR-F840-01800(75K) or higher.) Setting this parameter higher speeds up the response, but setting this too high causes vibration and acoustic noise.
- Setting **Pr.821 Speed control integral time 1** lower shortens the return time to the original speed during speed fluctuation, but setting it too low causes overshoot.

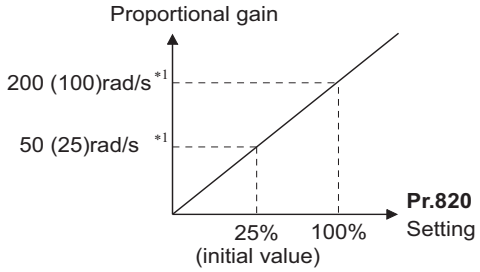

*1 The value in parentheses is applicable with the FR-F820-03160(75K) or higher and FR-F840-01800(75K) or higher.

- Actual speed gain is calculated as follows when load inertia is applied.

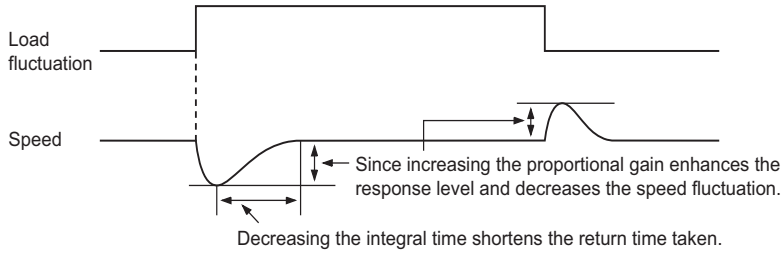

$$\text{Actual speed gain} = \text{Speed gain of a single motor} \times \frac{JM}{JM+JL}$$

JM: Motor inertia
JL: Load inertia converted as the motor axis inertia

◆ Adjustment procedure

1. Change the **Pr.820** setting while checking the conditions.
2. If it cannot be adjusted well, change **Pr.821** setting, and perform step *1* again.

No.	Movement / condition	Adjustment method	
1	Load inertia is too high.	Set **Pr.820 and Pr.821** higher.	
		Pr.820	If acceleration is slow, raise the setting by 10% and then set the value to 80 to 90% of the setting immediately before vibration/noise starts occurring.
		Pr.821	If overshoots occur, set about 80 to 90% of the maximum value without overshooting while increasing the setting value by twice.
2	Vibration or acoustic noise are generated from machines.	Set **Pr.820** lower and **Pr.821** higher.	
		Pr.820	Set about 80 to 90% of the maximum value without any vibration/noise while decreasing the setting value by 10%.
		Pr.821	If overshoots occur, set about 80 to 90% of the maximum value without overshooting while increasing the setting value by twice.
3	Response is slow.	Set **Pr.820** higher.	
		Pr.820	If acceleration is slow, set about 80 to 90% of the maximum value without any vibration/ acoustic noise while increasing the setting value by 5%.
4	Return time (response time) is long.	Set **Pr.821** lower.	
		Set about 80 to 90% of the maximum value without overshooting or unstable movements while decreasing the setting value of **Pr.821** by half.	
5	Overshoots or unstable movements occur.	Set **Pr.821** higher.	
		Set about 80 to 90% of the maximum value without overshooting or unstable movements while increasing the setting value of **Pr.821** by double.	

NOTE

- **Pr.830 Speed control P gain 2** and **Pr.831 Speed control integral time 2** are enabled when terminal RT is ON. In this case, replace them for **Pr.820 and Pr.821** in the description above.

上正科技有限公司
購買、維修、出售零組件
電話： 037-466333
Email: sales@sanjeng.com.tw
Line Id: @2222
www.sanjeng.com

◆ Gain adjustment of current controllers for the d axis and the q axis

- Use **Pr.824 Torque control P gain 1 (current loop proportional gain)** to adjust the proportional gain of current controllers for the d axis and the q axis. The 100% gain is equivalent to 1000 rad/s. Setting this parameter higher improves the trackability for current command changes. It also reduces the current fluctuation caused by external disturbances.
- Use **Pr.825 Torque control integral time 1 (current loop integral time)** to set the integral time of current controllers for the d axis and the q axis. If the setting value is small, it produces current fluctuation against external disturbances, decreasing time until it returns to original current value.

NOTE

- **Pr.834 Torque control P gain 2 (current loop proportional gain)** and **Pr.835 Torque control integral time 2 (current loop integral time)** are enabled when terminal RT is ON. In this case, replace them for **Pr.824** and **Pr.825** in the description above.

5.3.3 Troubleshooting in the speed control

PM

No.	Condition	Possible cause	Countermeasure
1	Motor does not run at the correct speed. (Command speed and actual speed differ.)	Speed command from the controller is different from the actual speed. The speed command is affected by noise.	• Check that the speed command sent from the controller is correct. (Take EMC measures.) • Set **Pr.72 PWM frequency selection** lower.
		The command speed and the speed recognized by the inverter are different.	• Adjust the bias and gain of the speed command again in **Pr.125, Pr.126, C2 to C7**, and **C12 to C15**.
2	The speed does not accelerate to the command speed.	Torque shortage. Stall prevention function is activated.	• Raise the stall prevention operation level. (Refer to page 273.) • Increase the capacity.
		Only P (proportional) control is performed.	• Speed deviation occurs under P (proportional) control when the load is heavy. Select PI control.
3	Motor speed fluctuates.	Speed command varies.	• Check that the speed command sent from the controller is correct. (Take EMC measures.) • Set **Pr.72** lower. • Set **Pr.822 Speed setting filter 1** higher. (Refer to page 337.)
		Torque shortage.	• Raise the stall prevention operation level. • (Refer to page 273.)
		Speed control gain is not suitable for the machine. (Resonance occurs.)	• Adjust **Pr.820 Speed control P gain 1 and Pr.821 Speed control integral time 1**.
4	Hunting (vibration or acoustic noise) occurs in the motor or the machine.	Speed control gain is too high.	• Set **Pr.820** lower and **Pr.821** higher.
		Torque control gain is too high.	• Set **Pr.824 Torque control P gain 1 (current loop proportional gain)** lower.
		Motor wiring is incorrect.	• Check the wiring.
5	Acceleration/ deceleration time is different from the setting.	Torque shortage.	• Raise the stall prevention operation level. (Refer to page 273.)
		Load inertia is too high.	• Set acceleration/deceleration time suitable for the load.
6	Machine movement is unstable.	Speed control gain is not suitable for the machine.	• Adjust **Pr.820** and **Pr.821**.
		Response is slow because of the inverter's acceleration/ deceleration time setting.	• Set the optimum acceleration/deceleration time.
7	Rotation ripple occurs during the low-speed operation.	High carrier frequency is affecting the motor rotation.	• Set **Pr.72** lower.
		Speed control gain is too low.	• Set **Pr.820** higher.

上揚科技有限公司
購買、維修、出手冊零組件
電話： 07-4613388
Email: service@repairtw.com
Line Id: @zzzz
www.repairtw.com

Parameters referred to

Pr.3 Base frequency, Pr.19 Base frequency voltage ☞ page 528
Pr.72 PWM frequency selection ☞ page 207
Pr.80 Motor capacity, Pr.81 Number of motor poles ☞ page 169
Pr.125 Terminal 2 frequency setting gain frequency, Pr.126 Terminal 4 frequency setting gain frequency ☞ page 339
Pr.822 Speed setting filter 1 ☞ page 337

5.3.4 Torque detection filter

PM

Set the time constant of primary delay filter torque feedback signal.

Speed loop response is reduced. Under ordinary circumstances, therefore, use the initial value as it is.

Pr.	Name	Initial value	Setting range	Description
827 G216	Torque detection filter 1	0 s	0	Without filter
			0.001 to 0.1 s	Set the time constant of primary delay filter torque feedback signal.
837 G316	Torque detection filter 2	9999	0 to 0.1 s	Second function of **Pr.827** (enabled when the RT signal is ON)
			9999	Same as **Pr.827** setting

◆ Stabilizing torque detection (Pr.827, Pr.837)

- Current loop response is reduced. Under ordinary circumstances, therefore, use the initial value as it is.
  If there is torque ripple due to high frequency disturbance, adjust until speed stabilizes by gradually raising the setting. Speed is oppositely destabilized if the setting value is too large.

◆ Employing multiple primary delay filters

- Use **Pr.833** and **Pr.837** if changing filter according to application. **Pr.837** is enabled when the Second function selection (RT) signal is turned ON.

NOTE

- The RT signal is a second function selection signal which also enables other second functions. (Refer to page 358.)
- The RT signal is assigned to the terminal RT in the initial status. Set "3" in one of **Pr.178 to Pr.189 (Input terminal function selection)** to assign the RT signal to another terminal.

上正科技有限公司
購買、維修 此手冊零組件
電話： 037-466333
Email: service@repairtw.com
Line id: @zzzz
www.repairtw.com

5.4 (E) Environment setting parameters

Purpose	Parameter to set			Refer to page
To set the time	Real time clock function	P.E020 to P.E022	Pr.1006 to Pr.1008	187
To set a limit for the reset function. To shut off output if the operation panel disconnects. To force deceleration to a stop on the operation panel.	Reset selection/ disconnected PU detection/PU stop selection/reset limit	P.E100 to P.E102, P.E107	Pr.75	188
To select the display language of the parameter unit	PU display language selection	P.E103	Pr.145	191
To control the buzzer of the parameter unit and operation panel	PU buzzer control	P.E104	Pr.990	191
To adjust the LCD contrast of the parameter unit	PU contrast adjustment	P.E105	Pr.991	191
To turn OFF the operation panel when not using it for a certain period of time	Display-off setting	P.E106	Pr.1048	191
To switch the monitor display of the operation panel to the PID set point setting screen by simply turning the setting dial	Direct setting	P.E108	Pr.1000	192
To use the USB memory	USB host reset	P.E110	Pr.1049	192
To use the setting dial of the operation panel like a potentiometer to set the frequency. To disable the operation panel.	Operation panel operation selection	P.E200	Pr.161	192
To change the frequency change increments which changes when using the setting dial of the operation panel	Frequency change increment amount setting	P.E201	Pr.295	193
To use the regeneration unit to increase the motor braking torque	Regenerative brake selection	P.E300	Pr.30	539
To change the overload current rating specification	Multiple rating setting	P.E301	Pr.570	194
To input a voltage between 480 V and 500 V	Input voltage mode selection	P.E302	Pr.977	195
To prevent parameter rewriting	Parameter write disable selection	P.E400	Pr.77	196
To restrict parameters with a password	Password	P.E410, P.E411	Pr.296, Pr.297	198
To use parameters freely	Free parameter	P.E420, P.E421	Pr.888, Pr.889	200
To change parameter settings for an IPM motor as a batch	PM parameter initialization	P.E430	Pr.998	175
To set multiple parameters by batch	Automatic parameter setting	P.E431	Pr.999	200
To display the required parameters	Applicable parameter display and user group function	P.E440 to P.E443	Pr.160, Pr.172 to Pr.174	204
To release the parameter copy warning (CP)	Parameter copy alarm release	P.E490	Pr.989	552
To reduce the motor noise and EMI	PWM carrier frequency changing	P.E600 to P.E602	Pr.72, Pr.240, Pr.260	207
To understand the maintenance time of inverter parts and peripheral devices	Inverter parts life display	P.E700 to P.E704	Pr.255 to Pr.259	208
	Maintenance output function	P.E710 to P.E715	Pr.503 to Pr.504, Pr.686 to Pr.689	212
	Current average value monitor signal	P.E720 to P.E722	Pr.555 to Pr.557	213

上正科技有限公司
購買、維修 IC 半導零組件
電話: 037-466333
Email: service@repairtw.com
Line id: @zzzz
www.repairtw.com

5.4.1 Real time clock function

The time can be set. The time can only be updated while the inverter power is ON.
The real time clock function is enabled using an optional LCD operation panel (FR-LU08).

Pr.	Name	Initial value	Setting range	Description
1006 **E020**	**Clock (year)**	2000 (year)	2000 to 2099	Set the year.
1007 **E021**	**Clock (month, day)**	101 (January 1)	101 to 131, 201 to 228 (229), 301 to 331, 401 to 430, 501 to 531, 601 to 630, 701 to 731, 801 to 831, 901 to 930, 1001 to 1031, 1101 to 1130, 1201 to 1231	Set the month and day. 1000's and 100's digits: Month (1 (January) to 12 (December)). 10's and 1's digits: Day (1 to the last day of the month (28, 29, 30, or 31)). For December 31, set "1231".
1008 **E022**	**Clock (hour, minute)**	0 (00:00)	0 to 59, 100 to 159, 200 to 259, 300 to 359, 400 to 459, 500 to 559, 600 to 659, 700 to 759, 800 to 859, 900 to 959, 1000 to 1059, 1100 to 1159, 1200 to 1259, 1300 to 1359, 1400 to 1459, 1500 to 1559, 1600 to 1659, 1700 to 1759, 1800 to 1859, 1900 to 1959, 2000 to 2059, 2100 to 2159, 2200 to 2259, 2300 to 2359	Set the hour and minute using the 24-hour clock. 1000's and 100's digits: 0 to 23 hours, 10's and 1's digits: 0 to 59 minutes. For 23:59, set "2359".

◆ Simple clock function

- When the current year, month, day, hour and minute are set in the parameters above, the inverter internal clock starts ticking. The set date and time can be checked by reading the parameters.

NOTE

- The time data of the internal clock is saved in the inverter's EEPROM every 10 minutes.
- The clock does not run while the control circuit power is OFF. The clock needs to be set every time after turning ON the inverter power. Prepare separate power supply, such as an external 24 V power supply, to supply power continuously to the control circuit for the simple clock function.
- However, if the power to the main circuit of the inverter is turned ON with the control circuit power already ON, the clock data is reset to the data stored in EEPROM because the Inverter reset is performed whenever the power is supplied to the main circuit of the inverter in the initial setting. To prevent the clock from resetting, set **Pr.30 Regenerative function selection**. (Refer to page 539.)
- The set time is used for functions such as the Fault history.

上正科技有限公司
購買、維修 此手冊零組件
電話： 037-466333
Email: service@repairtw.com
Line id: @zzzz
www.repairtw.com

◆ Real time clock function

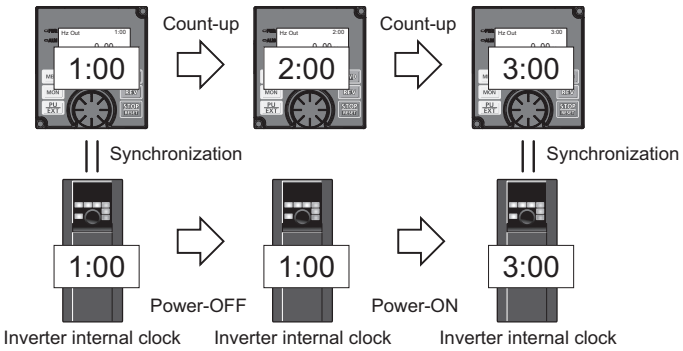

- When the FR-LU08 is connected to the inverter, the internal clock of the inverter can be synchronized with the clock in the FR-LU08 (Real time clock function). The FR-LU08 with battery (CR1216) backup can keep its clock function running even if the main power of the inverter is turned OFF. (The inverter internal clock stops running when the inverter power is turned OFF.)
- To adjust the clock in the FR-LU08, set **Pr.1006 to Pr.1008** on the FR-LU08.

NOTE

- Time synchronization between the inverter internal clock and the clock in the FR-LU08 is performed every one minute.
- If the FR-LU08 clock is reset due to dead battery for example, the data in the inverter internal clock is used.

5.4.2 Reset selection / disconnected PU detection / PU stop selection

The acceptance of reset command, the inverter operation in the event of detection of the PU (operation panel / parameter unit) disconnected, and the acceptance of stop command from the PU (PU stop function) can be selected using Pr.E100 (Reset selection), Pr.E101 (Disconnected PU detection), and Pr.E102 (PU stop selection), respectively, or using Pr.75 alone.

Pr.	Name	Initial value	Setting range	Description
75	**Reset selection/ Disconnected PU detection/PU stop selection**	14	0 to 3, 14 to 17, 1000 to 1003, 1014 to 1017*1	In the initial setting, the reset command input is always enabled, the inverter operation continues even when PU is disconnected, and the operation can be stopped on the PU.
			0 to 3, 14 to 17, 100 to 103, 114 to 117, 1000 to 1003, 1014 to 1017, 1100 to 1103, 1114 to 1117*2	
E100	**Reset selection**	0	0	Reset input is always enabled.
			1	Reset input is enabled only when the protective function is activated.
			2	Reset input is enabled only when the start signal is OFF.
			3	Reset input is enabled when the protective function is activated and the start signal is OFF.
E101	**Disconnected PU detection**	0	0	Operation continues even when the PU is disconnected.
			1	The inverter output is shut off when the PU is disconnected.
E102	**PU stop selection**	1	0	The inverter decelerates to a stop when the STOP key on the PU is pressed in PU operation mode.
			1	The inverter decelerates to a stop when the STOP key on the PU is pressed in any operation mode of the PU, external, or Network.
E107	**Reset limit**	0	0	Reset limit is disabled.
			1*2	Reset limit is enabled.

The parameters above do not return to their initial values even if Parameter clear/All parameter clear is executed.

*1 The setting range of the FR-F820-02330(55K) or lower and the FR-F840-01160(55K) or lower

*2 The setting range of the FR-F820-03160(75K) or higher and the FR-F840-01800(75K) or higher

上正科技有限公司
購買、維修 此手冊零組件
電話： 037-466333
Email: service@repairtw.com
Line id: @zzzz
www.repairtw.com

Pr.75 setting*3	Reset selection	Disconnected PU detection	PU stop selection
0, 100	Reset command input always enabled.	Operation continues even when PU is disconnected.	The inverter decelerates to a stop only when STOP RESET is pressed in the PU operation mode.
1, 101	Reset command input enabled only when the protective function activated.		
1000, 1100	Reset input enabled only when the start signal is OFF.		
1001, 1101	Reset input enabled only when the protective function is activated and the start signal is OFF.		
2, 102	Reset command input always enabled.	Inverter output shut off when PU is disconnected.	
3, 103	Reset command input enabled only when the protective function activated.		
1002, 1102	Reset input enabled only when the start signal is OFF.		
1003, 1103	Reset input enabled only when the protective function is activated and the start signal is OFF.		
14 (initial value), 114	Reset command input always enabled.	Operation continues even when PU is disconnected.	The inverter decelerates to a stop when STOP RESET is pressed in any operation mode of the PU, External, or Network.
15, 115	Reset command input enabled only when the protective function activated.		
1014, 1114	Reset input enabled only when the start signal is OFF.		
1015, 1115	Reset input enabled only when the protective function is activated and the start signal is OFF.		
16, 116	Reset command input always enabled.	Inverter output shut off when PU is disconnected.	
17, 117	Reset command input enabled only when the protective function activated.		
1016, 1116	Reset input enabled only when the start signal is OFF.		
1017, 1117	Reset input enabled only when the protective function is activated and the start signal is OFF.		

*3 When any of "100 to 103, 114 to 117, 1100 to 1103, or 1114 to 1117" is set in **Pr.75**, the reset limit function is enabled. (The setting is available for the FR-F820-03160(75K) or higher and FR-F840-01800(75K) or higher.)

◆ Reset selection (P.E100)

- While **P.E100** = "1", or **Pr.75** = "1, 3, 15, 17, 101, 103, 115, or 117", the reset command input is enabled (using the RES signal or through communication) only when the protective function is activated.
- While **P.E100** = "2" or **Pr.75** = "1000, 1002, 1014, 1016, 1100, 1102, 1114, or 1116", the reset command input is enabled (using the RES signal or through communication) only when the start signal is OFF.
- While **P.E100** = "3" or **Pr.75**="1001, 1003, 1015, 1017, 1101, 1103, 1115, or 1117", the reset command input is enabled (using the RES signal or through communication) only when the protective function is activated with the start signal OFF.

NOTE

- When the RES signal is input during operation, the motor coasts since the inverter being reset shuts off the output. Also, the cumulative value of the electronic thermal relay is cleared.
- When "reset input always enabled" is selected, the reset key on the PU is enabled only when the protective function is activated.
- The following table shows applicable start commands. (When both the STF and STR signals are ON, the start signal status is OFF.)

Start signal input interface	Applicable start signal
External terminal	X13, X28, JOGF, JOGR, STF, or STR
PU	Forward/reverse rotation command given by pressing the FWD/REV key
Communication	X13, X28, STF, or STR

- During emergency drive operation, reset input is always enabled regardless of the reset selection setting.

◆ Disconnected PU detection (P.E101)

- When the inverter detects that the PU (FR-DU08/FR-PU07) is disconnected from the inverter for 1 second or more while **P.E101** or **Pr.75** is set to shut off the inverter output upon disconnection of the PU, the PU disconnection ("E.PUE") indication is displayed and the inverter output is shut off.

上正科技有限公司
購買、維修、比手冊零組件
電話： 037-466333
Email: service@repairtw.com
Line id: @ccz
www.repairtw.com

NOTE

- When the PU has been disconnected before power-ON, the output is not shut off.
- To restart the inverter operation, confirm that the PU is connected before reset.
- When the inverter detects that the PU is disconnected during PU JOG operation while **P.E101** or **Pr.75** is set to continue the inverter operation even when the PU is disconnected, the inverter decelerates the motor to a stop.
- During RS-485 communication operation via the PU connector, the Reset selection function and the PU stop selection function are enabled but the Disconnected PU detection function is disabled. (The communication is checked according to **Pr.122 PU communication check time interval**.)

◆ PU stop selection (P.E102)

- The inverter operation can be stopped in any operation mode (PU, External, or Network) by pressing STOP RESET on the PU (PU stop function).
- When the operation is stopped by using the PU stop function, the indication "PS" is displayed on the PU. The Fault signal is not output.
- When **P.E102** = "0", or **Pr.75** = any of "0 to 3, or 100 to 103", only the inverter in the PU operation mode decelerates to a stop by pressing STOP RESET.

NOTE

- When **Pr.551 PU mode operation command source selection** = "1" (PU mode RS-485 terminal), deceleration stop (PU stop) is performed even when STOP RESET is pressed during operation in PU operation mode via RS-485 communication.

◆ How to restart the inverter which has been stopped in the External operation mode by using STOP RESET on the PU ("PS" (PU stop) warning reset method)

- For the operation panel (FR-DU08)

1. After completion of deceleration stop, turn OFF the STF and STR signals.

2. Press PU EXT three times ("PS" is cleared)
when **Pr.79 Operation mode selection** = "0 (initial value) or 6".
When **Pr.79** = "2, 3, or 7", the PU stop warning can be cleared with one keystroke.

- For the parameter unit (FR-PU07)

1. After completion of deceleration stop, turn OFF the STF or STR signal.

2. Press EXT ("PS" is cleared).

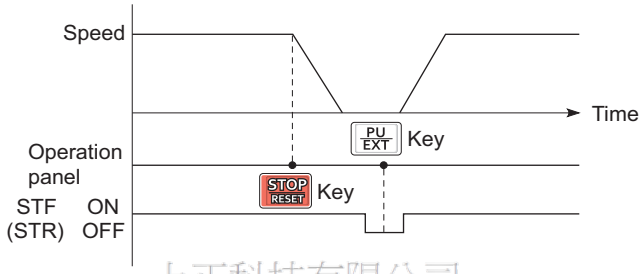

Stop/restart example for External operation

上正科技有限公司
購買、維修此手冊零組件
電話： 037-466333
Email: service@repairtw.com
Line id: @zzzz
www.repairtw.com

- The inverter can be restarted by performing the reset operation (by turning OFF and ON the power or inputting the RES signal).

NOTE

- Even when **Pr.250 Stop selection** ≠ "9999" is set and coasting stop is selected, using the PU stop function in the External operation mode does not provide coasting stop but deceleration stop.

◆ Reset limit (P.E107)

- Setting **P.E107** = "1" or **Pr.75** = any of "100 to 103, or 114 to 117" will make the inverter to refuse any reset operation (RES signal input, etc.) for 3 minutes after the first activation of an electronic thermal O/L relay or protective function (E.THM, E.THT, E.OC[]).
- The reset limit function is available with the FR-F820-03160(75K) or higher and the FR-F840-01800(75K) or higher.

NOTE

- Resetting the inverter power (turning OFF the control power) clears the accumulated thermal value.
- When the retry function is set enabled (**Pr.67 Number of retries at fault occurrence** ≠ "0"), the reset limit function is disabled.

⚠ CAUTION

- **Do not perform a reset while a start signal is being input. Doing so will cause a sudden start of the motor, which is dangerous.**

Parameters referred to

Pr.67 Number of retries at fault occurrence ☞ page 261
Pr.79 Operation mode selection ☞ page 228
Pr.250 Stop selection ☞ page 538
Pr.551 PU mode operation command source selection ☞ page 239

5.4.3 PU display language selection

You can switch the display language of the parameter unit (FR-PU07) to another.

Pr.	Name	Initial value	Setting range	Description
145 E103	PU display language selection	—	0	Japanese
			1	English
			2	German
			3	French
			4	Spanish
			5	Italian
			6	Swedish
			7	Finnish

5.4.4 Beep control

The key operation beep (buzzer) of the PU (operation panel or parameter unit) can be turned ON/OFF.

Pr.	Name	Initial value	Setting range	Description
990 E104	PU buzzer control	1	0	Beep (buzzer) is OFF.
			1	Beep (buzzer) is ON.

NOTE

- When the beep (buzzer) is set to ON, the inverter sounds a warning beep when a fault occurs.

5.4.5 PU contrast adjustment

Contrast of the LCD display on the LCD operation panel (FR-LU08) or the parameter unit (FR-PU07) can be adjusted. Decreasing the setting value lowers the contrast.

上正科技有限公司
購買、維修 此手冊零組件
電話： 037-466333
Email: service@repairtw.com
Line Id: @zzzz
www.repairtw.com

Pr.	Name	Initial value	Setting range	Description
991 E105	PU contrast adjustment	58	0 to 63	0: Low → 63: High

This parameter can be selected from among simple mode parameters only when the LCD operation panel (FR-LU08) or the parameter unit (FR-PU07) is connected to the inverter.

5.4.6 Display-off setting

The LED display of the operation panel (FR-DU08) can be turned OFF when the operation panel has not been used for a certain period of time.

Pr.	Name	Initial value	Setting range	Description
1048 E106	Display-off waiting time	0	0	Display-off setting is disabled.
			1 to 60 (minutes)	Set time until the LED of the operation panel is turned OFF.

- When the operation panel has not been operated for the time set in **Pr.1048**, the display-off setting is activated and the LED display turns OFF.
- In the display-off state, the [MON] indicator blinks slowly.
- The time interval counting for display-off is reset at removal/reinstallation of the operation panel, power-ON/OFF of the inverter, or the Inverter reset.
- The triggers for display-on are as follows:
  - Operation of the operation panel,
  - Occurrence of a warning, alarm, or fault,
  - Removal/reinstallation of the operation panel, power-ON/OFF of the inverter, or the Inverter reset,
  - Connection/disconnection at the USB A connector.

NOTE

- The [P.RUN] indicator is ON even if the operation panel is in the display-off state (while the PLC function is enabled).

5.4.7 Direct setting

The PID set point setting screen (direct setting screen) can be displayed first on the LCD operation panel (FR-LU08) according to the parameter setting.

Pr.	Name	Initial value	Setting range	Description
1000 **E108**	**Direct setting selection**	0	0	Displays the Frequency setting screen.
			1	Displays the direct setting screen (for set point setting).
			2	Displays the direct setting screen (for set point setting) and the frequency setting screen.

- This function is useful for setting the PID set point on the LCD operation panel.
- The monitor display can be switched from the main monitor screen to the set point setting screen for the PID action simply by turning , according to the setting of **Pr.1000 Direct setting selection**. On each setting screen, turn to input a setting value, and press F2 (SET) to confirm the setting.

Example of screen switching and shifting when the PID control is enabled (**Pr.128** ≠ "0")

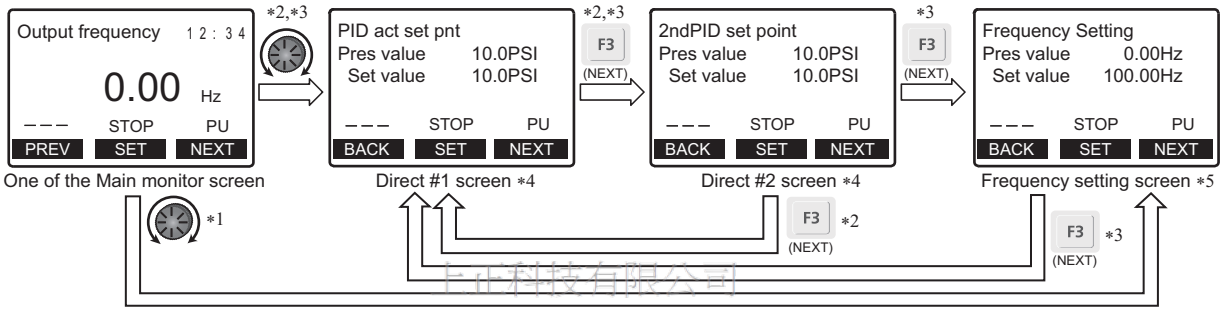

*1 When **Pr.1000** = "0"
*2 When **Pr.1000** = "1"
*3 When **Pr.1000** = "2"
*4 Not displayed when PID control is disabled (**Pr.128** = "0").
*5 Indication of "NEXT" is not displayed when **Pr.1000** = "0".

上正科技有限公司
購買、維修 此手冊零組件
電話： 037-466333
Email: service@repairtw.com
Line id: @zzzz
www.repairtw.com

- To switch back the monitor display from the Extended direct screen or the Frequency setting screen to the Main monitor screen, press F1 (BACK).

Parameters referred to

Pr.128 PID action selection ☞ page 401

5.4.8 Resetting USB host errors

When a USB device is connected to the USB connector (connector A), the USB host error can be canceled without performing the Inverter reset.

Pr.	Name	Initial value	Setting range	Description
1049 **E110**	**USB host reset**	0	0	Read only
			1	Resets the USB host.

- Parameter copy (refer to page 552) or the trace function (refer to page 465) is available when a USB device (such as a USB memory) is connected to the USB connector (connector A).
- When a device such as a USB charger is connected to the USB connector and an excessive current (500 mA or higher) flows, USB host error "UF" (UF warning) is displayed on the operation panel.
- When the UF warning appears, the USB error can be canceled by removing the USB device and setting **Pr.1049** = "1". (The UF warning can also be canceled by resetting the inverter power or resetting with the RES signal.)

5.4.9 Easy frequency setting (Volume-knob-like setting) and key lock function selection

The frequency can be easily set with the setting dial on the operation panel (FR-DU08) like a volume knob.

The key operation of the operation panel can be disabled.

Pr.	Name	Initial value	Setting range	Description	
161 E200	**Frequency setting/key lock operation selection**	0	0	Normal frequency setting	Key lock function disabled.
			1	Easy frequency setting (Volume-knob-like setting)	
			10	Normal frequency setting	Key lock function enabled.
			11	Easy frequency setting (Volume-knob-like setting)	

◆ Setting the frequency by turning the setting dial like a volume knob

- The frequency can be set by simply turning the setting dial on the operation panel (FR-DU08) during operation (Volume-knob-like setting). SET needs not to be pressed. (For the details of the operation method, refer to page 117.)

NOTE

- If the display changes from blinking "60.00" to "0.00", the setting value of **Pr.161** may not be "1".
- The newly-set frequency is be saved as the set frequency in EEPROM after 10 seconds.
- When setting the frequency by turning the setting dial, the frequency goes up to the set value of **Pr.1 Maximum frequency**. Be aware of what frequency **Pr.1** is set to, and adjust the setting of **Pr.1** according to the application.

◆ Disabling the setting dial and keys on the operation panel (by holding down the MODE key for 2 seconds)

- The setting dial and keys on the operation panel (FR-DU08) can be disabled to prevent parameter changes, unexpected starts or frequency changes.
- Set **Pr.161** to "10 or 11" and then press MODE for 2 seconds to disable setting dial and keys.
- When setting dial and keys are disabled, "HOLd" appears on the operation panel. If setting dial or key operation is attempted while dial and keys are disabled, "HOLd" appears. (After no setting dial or key operation for 2 seconds, the display returns to the monitoring screen.)
- To enable the setting dial and keys again, press MODE for 2 seconds.

上正科技有限公司
購買、維修 此手冊零組件
電話： 037-466333
Email: service@repairtw.com
Line id: @zzzz
www.repairtw.com

NOTE

- Even if setting dial and keys are disabled, the monitor indicator and STOP RESET are enabled.
- The PU stop warning cannot be reset by using keys while the key lock function is enabled.

Parameters referred to

Pr.1 Maximum frequency ☞ page 271

5.4.10 Frequency change increment amount setting

When setting the set frequency with the setting dial of the operation panel (FR-DU08), the frequency changes in 0.01 Hz increments in the initial status. Setting this parameter to increase the frequency increment amount that changes when the setting dial is rotated can improve usability.

Pr.	Name	Initial value	Setting range	Description
295 E201	**Frequency change increment amount setting**	0	0	Function disabled
			0.01	The minimum change width when the set frequency is changed with the setting dial can be set.
			0.10	
			1.00	
			10.00	

◆ Basic operation

- When **Pr.295** ≠ "0", the minimum increment when the set frequency is changed with the setting dial can be set.
  For example, when **Pr.295** = 1.00 Hz, one click (one dial gauge) of the setting dial changes the frequency in increments of 1.00 Hz, such as 1.00 Hz → 2.00 Hz → 3.00 Hz.

When **Pr.295**="1"

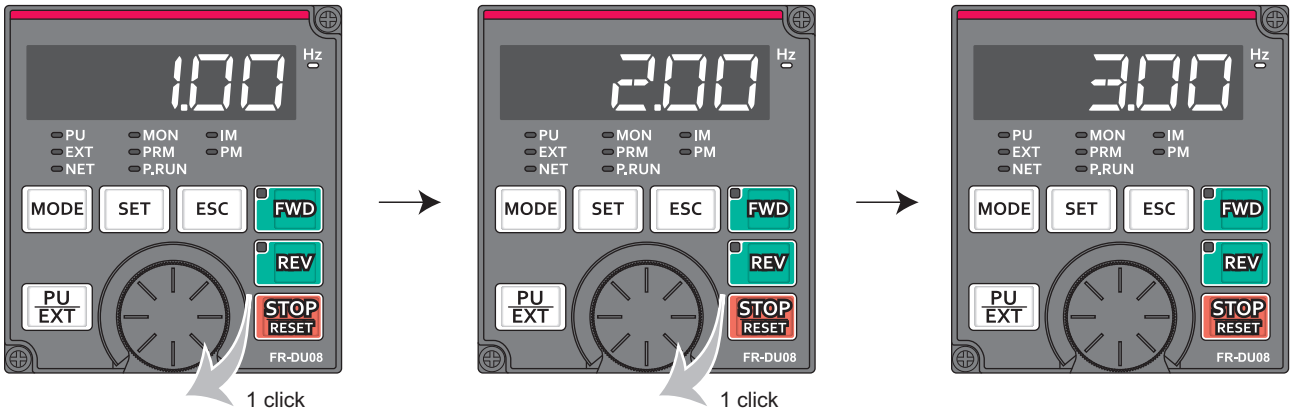

NOTE

- When machine speed display is selected in **Pr.37 Speed display**, the minimum increments of change are determined by **Pr.295** as well. Note that the setting value may differ as speed setting changes the set machine speed and converts it to the speed display again.
- For **Pr.295**, the increments are not displayed.
- The **Pr.295** setting is enabled only for the changes to the set frequency. It does not apply to the settings of other parameters related to frequency.
- When 10 is set, the frequency setting changes in 10 Hz increments. Be cautious of excessive speed (in potentiometer mode).

上正科技有限公司
購買、維修 此手冊零組件
電話： 037-466333
Email: service@repairtw.com
Line Id: @zzzz
www.repairtw.com

Parameters referred to
Pr.37 Speed display ☞ page 286

5.4.11 Multiple rating setting

Two rating types of different rated current and permissible load can be selected. The optimal inverter rating can be chosen in accordance with the application, enabling equipment size to be reduced. (The setting is available for the standard structure model or the separated converter type.)

Pr.	Name	Initial value		Setting range	Description (overload current rating, surrounding air temperature)
		FM	CA		
570 **E301**	**Multiple rating setting**	1	0	0	SLD rating. 110% for 60 seconds, 120% for 3 seconds (inverse-time characteristics) at surrounding air temperature of 40°C.
				1	LD rating. 120% for 60 seconds, 150% for 3 seconds (inverse-time characteristics) at surrounding air temperature of 50°C.

◆ Changing the parameter initial values and setting ranges

- When the **Pr.570** setting is changed, initial values of the following parameters will be changed according to each rating by performing an inverter reset and All parameter clear.

Pr.	Name	Pr.570 setting		Refer to
		0	1	
9	Electronic thermal O/L relay	SLD rated current*1	LD rated current*1	252
22	Stall prevention operation level	110%	120%	273
48	Second stall prevention operation level	110%	120%	273
56	Current monitoring reference	SLD rated current*1	LD rated current*1	297
148	Stall prevention level at 0 V input	110%	120%	273
149	Stall prevention level at 10 V input	120%	150%	273
150	Output current detection level	110%	120%	321
165	Stall prevention operation level for restart	110%	120%	446
557	Current average value monitor signal output reference current	SLD rated current*1	LD rated current*1	213
874	OLT level setting	110%	120%	273
893	Energy saving monitor reference (motor capacity)	SLD rated motor capacity*1	LD rated motor capacity*1	306

*1 The rated current and motor capacity differ depending on the inverter capacity. Refer to the inverter rated specifications (page 612).

NOTE

- When **Pr.570** = "0" (SLD rating), carrier frequency automatic reduction is enabled regardless of the setting in **Pr.260 PWM frequency automatic switchover**.
- Setting **Pr.570** is not available for the IP55 compatible model. The LD rating is applied.

Parameters referred to

Pr.260 PWM frequency automatic switchover ☞ page 207

上正科技有限公司
購買、維修 此手冊零組件
電話： 037-466333
Email: service@repairtw.com
Line id: @zzzz
www.repairtw.com

5.4.12 Using the power supply exceeding 480 VAC

To input a voltage between 480 VAC and 500 VAC to the 400 V class inverter, change the voltage protection level.

Pr.	Name	Initial value	Setting range	Description
977 E302	**Input voltage mode selection**	0	0	400 V class voltage protection level
			1	500 V class voltage protection level
			2	For manufacturer setting. Do not set.

- To use a voltage between 480 VAC and 500 VAC, set **Pr.977 Input voltage mode selection** = "1". The setting is applied after a reset.
- Setting **Pr.977** = "1" changes the voltage protection level to the one for the 500 V class.
- The increased magnetic excitation deceleration operation level is 740 V. Use **Pr.660 Increased magnetic excitation deceleration operation selection** to select the increased magnetic excitation deceleration.)

NOTE

- Stand-alone options (except line noise filter) cannot be used when inputting a voltage between 480 VAC and 500 VAC.
- The voltage protection level of the 200 V class inverters is not affected by the **Pr.977** setting.

Parameters referred to

Pr.660 Increased magnetic excitation deceleration operation selection ☞ page 547

5.4.13 Parameter write selection

Whether to enable the writing to various parameters or not can be selected. Use this function to prevent parameter values from being rewritten by misoperation.

Pr.	Name	Initial value	Setting range	Description
77 **E400**	**Parameter write selection**	0	0	Parameter write is enabled only during stop.
			1	Parameter writing is disabled.
			2	Parameter writing is enabled in any operation mode regardless of the operation status.

- **Pr.77** can be set at any time regardless of the operation mode or operation status. (Setting through communication is unavailable.)

◆ Parameter write enabled only during stop (Pr.77 = "0 (initial value)")

- Parameters can be written only during a stop in the PU operation mode.
- The following parameters can always be written regardless of the operation mode or operation status.

Pr.	Name
4 to 6	(Multi-speed setting high-speed, middle-speed, low-speed)
22	Stall prevention operation level
24 to 27	(Multi-speed setting speed 4 to speed 7)
52	Operation panel main monitor selection
54	FM/CA terminal function selection
55	Frequency monitoring reference
56	Current monitoring reference
72*1	PWM frequency selection
75	Reset selection/Disconnected PU detection/PU stop selection
77	Parameter write selection
79*2	Operation mode selection
129	PID proportional band
130	PID integral time
133	PID action set point
134	PID differential time
158	AM terminal function selection
160	User group read selection
232 to 239	(Multi-speed setting speed 8 to speed 15)
240*1	Soft-PWM operation selection
241	Analog input display unit switchover
268	Monitor decimal digits selection
290	Monitor negative output selection
295	Frequency change increment amount setting
296, 297	(Password setting)
306	Analog output signal selection
310	Analog meter voltage output selection
340*2	Communication startup mode selection
345, 346	(DeviceNet communication)
416, 417	(PLC)
434, 435	(CC-Link communication)
496, 497	(Remote output)
498	PLC function flash memory clear
550*2	NET mode operation command source selection
551*2	PU mode operation command source selection

Pr.	Name
555 to 557	(Current average value monitoring)
656 to 659	(Analog remote output)
663	Control circuit temperature signal output level
675	User parameter auto storage function selection
755 to 758	(Second PID control)
759	PID unit selection
774 to 776	(PU/DU monitor selection)
866	Torque monitoring reference
888, 889	(Free parameter)
891 to 899	(Energy saving monitoring)
C0 (900)	FM/CA terminal calibration
C1(901)	AM terminal calibration
C8 (930)	Current output bias signal
C9 (930)	Current output bias current
C10 (931)	Current output gain signal
C11 (931)	Current output gain current
990	PU buzzer control
991	PU contrast adjustment
992	Operation panel setting dial push monitor selection
997	Fault initiation
998*2	PM parameter initialization
999*2	Automatic parameter setting
1000	Direct setting selection
1006	Clock (year)
1007	Clock (month, day)
1008	Clock (hour, minute)
1019	Analog meter voltage negative output selection
1048	Display-off waiting time
1142	Second PID unit selection
1150 to 1199	(PLC function user parameters)
1211 to 1219	(PID gain tuning)
1460 to 1466	(PID multistage set point 1 to 7)
1480 to 1485	(Load characteristics fault detection)

*1 Writing during operation is enabled in PU operation mode, but disabled in External operation mode.
*2 Writing during operation is disabled. To change the parameter setting value, stop the operation.

上正科技有限公司
購買、維修 此手冊零組件
電話： 037-466333
Email: service@repairtw.com
Line id: @zzzz
www.repairtw.com

◆ Parameter write disabled (Pr.77 = "1")

- Parameter write, Parameter clear, and All parameter clear are disabled. (Parameter read is enabled.)
- The following parameters can be written even if **Pr.77** = "1".

Pr.	Name
22	Stall prevention operation level
75	Reset selection/Disconnected PU detection/PU stop selection
77	Parameter write selection
79	Operation mode selection*1
160	User group read selection
296	Password lock level

297	Password lock/unlock
345, 346	(DeviceNet communication)
496, 497	(Remote output)
656 to 659	(Analog remote output)
997	Fault initiation

*1 Writing during operation is disabled. To change the parameter setting value, stop the operation.

◆ Parameter write enabled during operation (Pr.77 = "2")

- These parameters can always be written.
- The following parameters cannot be written during operation even if **Pr.77** = "2". To change the parameter setting value, stop the operation.

Pr.	Name
23	Stall prevention operation level compensation factor at double speed
48	Second stall prevention operation level
49	Second stall prevention operation frequency
60	Energy saving control selection
66	Stall prevention operation reduction starting frequency
71	Applied motor
79	Operation mode selection
80	Motor capacity
81	Number of motor poles
82	Motor excitation current
83	Rated motor voltage
84	Rated motor frequency
90 to 94	(Motor constant)
95	Online auto tuning selection
96	Auto tuning setting/status
135 to 139	(Electronic bypass sequence parameter)
178 to 196	(Input and output terminal function selection)
248	Self power management selection
254	Main circuit power OFF waiting time
261	Power failure stop selection
289	Inverter output terminal filter
291	Pulse train I/O selection
298	Frequency search gain
313 to 322	(Extended output terminal function selection)
329	Digital input unit selection
414	PLC function operation selection
415	Inverter operation lock mode setting
418	Extension output terminal filter
450	Second applied motor
453	Second motor capacity

Pr.	Name
454	Number of second motor poles
455	Second motor excitation current
456	Rated second motor voltage
457	Rated second motor frequency
458 to 462	(Second motor constant)
463	Second motor auto tuning setting/status
541	Frequency command sign selection
560	Second frequency search gain
561	PTC thermistor protection level
570	Multiple rating setting
574	Second motor online auto tuning
578	Auxiliary motor operation selection
579	Motor connection function selection
598	Undervoltage level
606	Power failure stop external signal input selection
660 to 662	Increased magnetic excitation deceleration
673	SF-PR slip amount adjustment operation selection
699	Input terminal filter
702	Maximum motor frequency
706, 707, 711, 712, 717, 721, 724, 725, 1412	(PM motor tuning)
738 to 746, 1413	(Second PM motor tuning)
800	Control method selection
858	Terminal 4 function assignment
859	Torque current/Rated PM motor current
860	Second motor torque current/Rated PM motor current
868	Terminal 1 function assignment
977	Input voltage mode selection
998	PM parameter initialization
999	Automatic parameter setting
1002	Lq tuning target current adjustment coefficient

上揚科技有限公司
購買、維修 此手冊零組件
電話： 037-466333
Email: service@repairtw.com
Line id: @zzzz
www.repairtw.com

5.4.14 Password

Registering a 4-digit password can restrict access to parameters (reading/writing).

Pr.	Name	Initial value	Setting range	Description
296 **E410**	**Password lock level**	9999	0 to 6, 99, 100, 106, 199	Password protection enabled. Setting the access (reading/writing) restriction level to parameters locked with a password enables writing to **Pr.297**.
			9999	No password protection
297 **E411**	**Password lock/unlock**	9999	1000 to 9998	Input a 4-digit password to lock parameters, or input the valid password to unlock the locked parameters.
			(0 to 5)*1	Number of failed password attempts (read only, displayed after any of "100 to 106, or 199" is set in **Pr.296** and a password to lock parameters is input).
			9999*1	No password protection

These parameters can be set when **Pr.160 User group read selection** = "0". However, when **Pr.296** ≠ 9999 (Password protection enabled), **Pr.297** can always be set, regardless of the setting in **Pr.160**.

*1 Although "0 or 9999" can be input in **Pr.297**, the value is invalid. (The display cannot be changed.)

◆ Parameter reading/writing restriction level (Pr.296)

- The access (reading/writing) restriction level to parameters in the PU operation mode or NET operation mode can be selected with **Pr.296**.

Pr.296 setting	Access to parameters in the PU operation mode*3		Access to parameters in the NET operation mode*4			
			via RS-485 terminals / using PLC function*7		via communication option	
	Read*1	Write*2	Read	Write*2	Read	Write*2
9999	○	○	○	○	○	○
0, 100*6	×	×	×	×	×	×
1, 101	○	×	○	×	○	×
2, 102	○	×	○	○	○	○
3, 103	○	○	○	×	○	×
4, 104	×	×	×	×	○	×
5, 105	×	×	○	○	○	○
6, 106	○	○	×	×	○	×
99, 199	Only the parameters registered in the user group can be read/written (For the parameters not registered in the user group, the restriction level when "4 or 104" is set applies.)*5					

上正科技有限公司
購買、維修 此手冊零組件
電話： 037-466333
Email: service@repairtw.com
Line id: @zzzz
www.repairtw.com

○: Enabled, ×: Disabled

*1 If the parameter reading is restricted by the setting of **Pr.160 User group read selection**, those parameters cannot be read even when "○" is indicated.

*2 If the parameter writing is restricted by the setting of **Pr.77 Parameter write selection**, those parameters cannot be written even when "○" is indicated.

*3 Access from the command source in the PU operation mode (the operation panel (FR-DU08) or the parameter unit in the initial setting) is restricted. (For the PU operation mode command source selection, refer to page 239.)

*4 Access from the command source in the Network operation mode (the RS-485 terminals or a communication option in the initial setting) is restricted. (For the NET operation mode command source selection, refer to page 239.)

*5 Read/write is enabled only for the simple mode parameters registered in the user group when **Pr.160** = "9999". **Pr.296 and Pr.297** are always read/write enabled whether registered to a user group or not.

*6 If a communication option is installed, the Option fault (E.OPT) occurs, and the inverter output shuts off. (Refer to page 579.)

*7 The PLC function user parameters (**Pr.1150 to Pr.1199**) can be written and read by the PLC function regardless of the **Pr.296** setting.

◆ Locking parameters with a password (Pr.296, Pr.297)

- The procedure of locking parameters with a password is as follows.

1. Set the parameter reading/writing restriction level to enable the password protection. (Set a value other than "9999" in **Pr.296**.)

Pr.296 setting	Allowable number of failed password attempts	Pr.297 readout
0 to 6 or 99	Unlimited	Always 0
100 to 106 or 199*1	Limited to 5 times	Number of failed password attempts (0 to 5)

*1 If an invalid password is input 5 times while any of "100 to 106, or 199" is set in **Pr.296**, the password is locked up afterward (the locked parameters cannot be unlocked even with the valid password). All parameter clear is required to reset the password. (After All parameter clear is performed, the parameters are returned to their initial values.)

2. Write a four-digit number (1000 to 9998) to **Pr.297** as a password (writing is disabled when **Pr.296** = "9999"). After a password is set, parameters are locked and access (reading/writing) to the parameters is limited at the level set in **Pr.296** until the valid password is input to unlock the locked parameters.

NOTE

- After a password is set, the **Pr.297** readout is always any of "0 to 5".
- "LOCd" appears when a password-protected parameter is attempted to be read/written.
- Even if a password is set, the parameters which are written by the inverter, such as parameters related to the life check of inverter parts, are overwritten as needed.
- Even if a password is set, **Pr.991 PU contrast adjustment** can be read/written when the parameter unit (FR-PU07) is connected.

◆ Unlocking the locked parameters (Pr.296, Pr.297)

- There are two ways to unlock the locked parameters.
- Enter the password in **Pr.297**. When a valid password is input, the locked parameters can be unlocked. When an invalid password is input, an error indication appears and the parameters cannot be unlocked. If an invalid password is input 5 times while any of "100 to 106, or 199" is set in **Pr.296**, the locked parameters cannot be unlocked afterward even with the valid password (the password is locked up).
- Perform All parameter clear.

NOTE

- If the password is forgotten, it can be reset by performing All parameter clear, but the other parameters are also reset.
- All parameter clear cannot be performed during the inverter operation.
- When using FR Configurator2 in the PU operation mode, do not set "0, 4, 5, 99, 100, 104, 105, or 199" (parameter read is disabled) in **Pr.296**. Doing so may cause abnormal operation.
- The means to reset the password varies according to how the reset command is sent (from the PU, through RS-485 communication, or via a communication option).

E-Mail: service@repairtw.com

	PU (operation panel or parameter unit)	RS-485 communication	Communication option
All parameter clear	○	○	○
Parameter clear	×	×	○

○: Password reset enabled, ×: Password reset disabled

- For the information how to perform Parameter clear or All parameter clear with the parameter unit or via a communication option, refer to the Instruction Manual of the parameter unit or the option. (For the operation panel (FR-DU08), refer to page 551. For RS-485 communication using the Mitsubishi inverter protocol, refer to page 484. For RS-485 communication using the MODBUS-RTU communication protocol, refer to page 498.)

◆ Access to parameters according to the password status

Parameter		Password protection disabled / Parameters unlocked		Parameters locked	Password locked up
		Pr.296 = 9999 Pr.297 = 9999	Pr.296 ≠ 9999 Pr.297 = 9999	Pr.296 ≠ 9999 Pr.297 = any of 0 to 4 (read only)	Pr.296 = 100 to 106, or 199 Pr.297 = 5 (read only)
Pr.296	Read	○*1	○	○	○
	Write	○*1	○*1	×	×
Pr.297	Read	○*1	○	○	○
	Write	×	○	○	○*3
Pr.CLR write (Parameter clear)		○	○	×*4	×*4
ALL.C All write (All parameter clear)		○	○	○*2	○*2
Pr.CPY write (Parameter copy)		○	○	×	×

○: Enabled, ×: Disabled

*1 Reading/writing is disabled if reading is restricted by the **Pr.160** setting. (Reading is available in the Network operation mode regardless of the **Pr.160** setting.)

*2 All parameter clear cannot be performed during the operation.
*3 Inputting a password is possible but the locked-up password cannot be unlocked or reset even with the valid password.
*4 Parameter clear can be performed only via a communication option.

NOTE

- When "4, 5, 104, or 105" is set in **Pr.296** and a password is set, **Pr.15 Jog frequency** is not listed on the parameter unit (FR-PU07).
- When a password has been set and parameters are locked, Parameter copy cannot be performed using the operation panel, parameter unit, or a USB memory device .

Parameters referred to

Pr.77 Parameter write selection ☞ page 196
Pr.160 User group read selection ☞ page 204
Pr.550 NET mode operation command source selection ☞ page 239
Pr.551 PU mode operation command source selection ☞ page 239

5.4.15 Free parameter

Any number within the setting range of 0 to 9999 can be input.
For example, these numbers can be used:

- As a unit number when multiple units are used.
- As a pattern number for each operation application when multiple units are used.
- As the year and month of introduction or inspection.

Pr.	Name	Initial value	Setting range	Description
888 **E420**	**Free parameter 1**	9999	0 to 9999	Any value can be input. The settings are retained even if the inverter power is turned OFF.
889 **E421**	**Free parameter 2**	9999	0 to 9999	

上正科技有限公司
購買、維修 此手冊零組件
電話： 037-406633
Email: service@repairtw.com
Line id: @zzzz
www.repairtw.com

NOTE

- **Pr.888** and **Pr.889** do not influence the operation of the inverter.

5.4.16 Setting multiple parameters by batch

The setting of particular parameters is changed by batch, such as communication parameters for connection with the Mitsubishi Electric human machine interface (GOT), the parameters for the rated frequency (50/60 Hz) setting, or the parameters for acceleration/deceleration time increment.
Multiple parameters are changed automatically. Users do not have to consider each parameter number (automatic parameter setting).

Pr.	Name	Initial value	Setting range	Description	
999 **E431**	**Automatic parameter setting**	9999*1	1	Standard PID display setting	
			2	Extended PID display setting	
			10	GOT initial setting (PU connector)	"Controller Type" in GOT: FREQROL 500/700/800, SENSORLESS SERVO
			11	GOT initial setting (RS-485 terminal)	
			12	GOT initial setting (PU connector)	"Controller Type" in GOT: FREQROL 800 (Automatic Negotiation)
			13	GOT initial setting (RS-485 terminal)	
			20	50 Hz rated frequency	
			21	60 Hz rated frequency	
			9999	No action	

*1 The read value is always "9999".

◆ Automatic parameter setting (Pr.999)

- Select which parameters to automatically set from the following table, and set them in **Pr.999**. Multiple parameter settings are changed automatically. Refer to page 202 for the list of parameters that are changed automatically.

Pr.999 setting	Description		Operation in the automatic parameter setting mode
1	Sets the standard monitor indicator setting of PID control.		"AUTO" (AUTO) → "PID" (PID) → Write "1".
2	Automatically sets the monitor indicator for PID control.		"AUTO" (AUTO) → "PID" (PID) → Write "2".
10	Automatically sets the communication parameters for the GOT connection with PU connector ("Controller Type" in GOT: FREQROL 500/700/800, SENSORLESS SERVO)		"AUTO" (AUTO) → "GOT" (GOT) → Write "1".
11	Automatically sets the communication parameters for the GOT connection with RS-485 terminals ("Controller Type" in GOT: FREQROL 500/700/800, SENSORLESS SERVO)		—
12	Automatically sets the communication parameters for the GOT connection with a PU connector ("Controller Type" in GOT: FREQROL 800 (Automatic Negotiation))		"AUTO" (AUTO) → "GOT" (GOT) → Write "2".
13	Automatically sets the communication parameters for the GOT connection with RS-485 terminals ("Controller Type" in GOT: FREQROL 800 (Automatic Negotiation))		—
20	50 Hz rated frequency	Sets the related parameters of the rated frequency according to the power supply frequency	"AUTO" (AUTO) → "F50" (F50) → Write "1".
21	60 Hz rated frequency		—

上正科技有限公司
購買、維修 此手冊零組件
電話: 02-2914 6838
Email: service@repairtw.com
www.repairtw.com

NOTE

- If the automatic setting is performed with **Pr.999** or the automatic parameter setting mode, the settings including the changed parameter settings (changed from the initial setting) will be automatically changed. Before performing the automatic setting, confirm that changing the parameters will not cause any problem.

◆ PID monitor indicator setting (Pr.999 = "1 or 2")

Pr.	Name	Initial value	Pr.999 = "1"	Pr.999 = "2"	Refer to page
759	PID unit selection	9999	9999	4	423
1142	Second PID unit selection	9999	9999	4	
774	Operation panel monitor selection 1	9999	9999	52	288
775	Operation panel monitor selection 2	9999	9999	53	
776	Operation panel monitor selection 3	9999	9999	54	
C42 (934)	PID display bias coefficient	9999	9999	0	423
C44 (935)	PID display gain coefficient	9999	9999	100	
1136	Second PID display bias coefficient	9999	9999	0	
1138	Second PID display gain coefficient	9999	9999	100	
—	3-line monitor setting	—	Invalid	Enabled*1*2*3	—
—	Direct setting	—	Invalid	Enabled*3	—
—	Dedicated parameter list function	—	Invalid	Enabled*3	—

*1 Enabled when the FR-LU08 (-01) is used.
*2 Enabled when the FR-PU07 is used.
*3 Enabled when the FR-PU07-01 is used.

■ 3-line monitor setting

On the operation panel or parameter unit, the 3-line monitor is used as the first monitor.

■ Direct setting

Pressing the [FUNC] key on the FR-PU07-01 displays the direct setting screen. The PID action set point can be directly set regardless of the operation mode or **Pr.77 Parameter write selection** setting.

Pressing the [FUNC] key on the direct setting screen displays the function menu.

Direct setting	Parameter to be set
Direct setting 1	**Pr.133 PID action set point**
Direct setting 2	**Pr.755 Second PID action set point**

■ Dedicated parameter list function

Pressing the [PrSET] key of the FR-PU07-01 displays the dedicated parameter list. Parameters that need to be set first for the PID extended display setting are listed.

Dedicated parameter list	Parameter to be set
No.1	**Pr.999 Automatic parameter setting**
No.2	**Pr.934 PID display bias coefficient**
No.3	**Pr.935 PID display bias analog value**

NOTE

- The display of parameters other than the above may be changed due to changes in **C42 or C44**. Set the PID monitor indicator before changing the settings of other parameters.
- To use the direct setting on the LCD operation panel, set **Pr.1000Direct setting selection**. (Refer to page 192.)

◆ GOT initial setting (PU connector) (Pr.999 = "10, 12")

Pr.	Name	Initial value	Pr.999 = "10"	Pr.999 = "12"	Refer to page
79	Operation mode selection	0	1	1	228
118	PU communication speed	192	192	1152	482
119	PU communication stop bit length / data length	1	10	0	
120	PU communication parity check	2	1	1	
121	PU communication retry count	1	9999	9999	
122	PU communication check time interval	9999	9999	9999	
123	PU communication waiting time setting	9999	0 ms	0 ms	
124	PU communication CR/LF selection	1	1	1	
340	Communication startup mode selection	0	0	0	237
414	PLC function operation selection	0	—	2 *1	462

*1 When **Pr.414** = "1", the setting value is not changed.

上正科技有限公司
購買、維修 此主機零組件
電話： 037-466333
Email: service@repairtw.com
Line id: @zzzz
www.repairtw.com

■ Initial setting with the GOT2000 series

- When "FREQROL 500/700/800, SENSORLESS SERVO" is selected for "Controller Type" in the GOT setting, set **Pr.999** = "10" to configure the GOT initial setting.
- When "FREQROL 800 (Automatic Negotiation)" is selected for "Controller Type" in the GOT setting, the GOT automatic connection can be used. When "FREQROL 800 (Automatic Negotiation)" is selected for "Controller Type" in the GOT setting and the GOT automatic connection is not used, set **Pr.999** = "12" to configure the GOT initial setting. (Refer to page 523.)

■ Initial setting with the GOT1000 series

- Set **Pr.999** = "10" to configure the GOT initial setting.

NOTE

- Always perform an inverter reset after the initial setting.
- For the details of connection with GOT, refer to the Instruction Manual of GOT.

◆ GOT initial setting (RS-485 terminals) (Pr.999 = "11, 13")

Pr.	Name	Initial value	Pr.999 = "11"	Pr.999 = "13"	Refer to page
79	Operation mode selection	0	0	0	228
332	RS-485 communication speed	96	192	1152	482
333	RS-485 communication stop bit length / data length	1	10	0	
334	RS-485 communication parity check selection	2	1	1	
335	RS-485 communication retry count	1	9999	9999	
336	RS-485 communication check time interval	0 s	9999	9999	
337	RS-485 communication waiting time setting	9999	0 ms	0 ms	
340	Communication startup mode selection	0	1	1	237
341	RS-485 communication CR/LF selection	1	1	1	482
414	PLC function operation selection	0	—	2*1	462
549	Protocol selection	0	0	0	498

*1 When **Pr.414** = "1", the setting value is not changed.

■ Initial setting with the GOT2000 series

- When "FREQROL 500/700/800, SENSORLESS SERVO" is selected for "Controller Type" in the GOT setting, set **Pr.999** = "11" to configure the GOT initial setting.
- When "FREQROL 800 (Automatic Negotiation)" is selected for "Controller Type" in the GOT setting, the GOT automatic connection can be used. When "FREQROL 800 (Automatic Negotiation)" is selected for "Controller Type" in the GOT setting and the GOT automatic connection is not used, set **Pr.999** = "13" to configure the GOT initial setting. (Refer to page 523.)

■ Initial setting with the GOT1000 series

- Set **Pr.999** = "11" to configure the GOT initial setting.

上市科技有限公司
購買、維修 此手冊零組件
電話： 037-466333
Email: service@repairtw.com
Line id: @zzzz
www.repairtw.com

NOTE

- Always perform an inverter reset after the initial setting.
- For the details of connection with GOT, refer to the Instruction Manual of GOT.

◆ Rated frequency (Pr.999 = "20" (50 Hz) or "21" (60 Hz))

Pr.	Name	Initial value		Pr.999 = "21"	Pr.999 = "20"	Refer to page
		FM type	CA type			
3	Base frequency	60 Hz	50 Hz	60 Hz	50 Hz	528
4	Multi-speed setting (high speed)	60 Hz	50 Hz	60 Hz	50 Hz	249
20	Acceleration/deceleration reference frequency	60 Hz	50 Hz	60 Hz	50 Hz	216
37	Speed display	0		0		286
55	Frequency monitoring reference	60 Hz	50 Hz	60 Hz	50 Hz	297
66	Stall prevention operation reduction starting frequency	60 Hz	50 Hz	60 Hz	50 Hz	273
125 (903)	Terminal 2 frequency setting gain frequency	60 Hz	50 Hz	60 Hz	50 Hz	339
126 (905)	Terminal 4 frequency setting gain frequency	60 Hz	50 Hz	60 Hz	50 Hz	
263	Subtraction starting frequency	60 Hz	50 Hz	60 Hz	50 Hz	458
266	Power failure deceleration time switchover frequency	60 Hz	50 Hz	60 Hz	50 Hz	
386	Frequency for maximum input pulse	60 Hz	50 Hz	60 Hz	50 Hz	245
390	% setting reference frequency	60 Hz	50 Hz	60 Hz	50 Hz	511
505	Speed setting reference	60 Hz	50 Hz	60 Hz	50 Hz	286
584	Auxiliary motor 1 starting frequency	60 Hz	50 Hz	60 Hz	50 Hz	430
585	Auxiliary motor 2 starting frequency	60 Hz	50 Hz	60 Hz	50 Hz	
586	Auxiliary motor 3 starting frequency	60 Hz	50 Hz	60 Hz	50 Hz	
C14 (918)	Terminal 1 gain frequency (speed)	60 Hz	50 Hz	60 Hz	50 Hz	339
1013	Emergency drive running speed after retry reset	60 Hz	50 Hz	60 Hz	50 Hz	263

5.4.17 Extended parameter display and user group function

This function restricts the parameters that are read by the operation panel and parameter unit.

Pr.	Name	Initial value		Setting range	Description
		FM	CA		
160 **E440**	**User group read selection**	9999	0	9999	Only simple mode parameters are displayed.
				0	Displays simple mode and extended parameters.
				1	Only parameters registered in user groups are displayed.
172 **E441**	**User group registered display/batch clear**	0		(0 to 16)	Displays the number of parameters that are registered in the user groups. (Read-only)
				9999	Batch clear of user group registrations
173 **E442**	**User group registration**	9999*1		0 to 1999, 9999	Sets the parameter number to register for the user group.
174 **E443**	**User group clear**	9999*1		0 to 1999, 9999	Sets the parameter number to clear from the user group.

*1 The read value is always "9999".

◆ Display of simple mode parameters and extended parameters (Pr.160)

- When **Pr.160** = "9999", only the simple mode parameters are displayed on the operation panel (FR-DU08) and parameter unit (FR-PU07). (For the simple mode parameters, refer to the parameter list on page 132.)
- With the initial value (**Pr.160** = "0", simple mode parameters and extended parameters can be displayed.

NOTE

- When a plug-in option in installed on the inverter, the option parameters can also be read.
- Every parameter can be read regardless of the **Pr.160** setting when reading parameters via a communication option.
- When reading the parameters using the RS-485 terminals, all parameters can be read regardless of the **Pr.160** setting by setting **Pr.550 NET mode operation command source selection** and **Pr.551 PU mode operation command source selection**.

上正科技有限公司
購買、維修 工業電子零組件
電話： 037-466333
Email: service@regalrly.com
Line id: @zzzz
www.regalrly.com

Pr.551	Pr.550	Pr.160 enabled/disabled
1 (RS-485)	—	Enabled
2 (PU), 3 (USB), 9999 (Automatic determination) (initial value)	0 (Communication option)	Enabled
	1 (RS-485)	Disabled (All can be read)
	9999 (Automatic determination) (initial value)	With communication option: Enabled
		Without communication option: Disabled (All can be read)

- When the LCD operation panel (FR-LU08) or the parameter unit (FR-PU07) is installed, **Pr.15 Jog frequency**, **Pr.16 Jog acceleration/deceleration time**, **C42(Pr.934) PID display bias coefficient**, **C43(Pr.934) PID display bias analog value**, **C44(Pr.935) PID display gain coefficient**, **C45(Pr.935) PID display gain analog value**, and **Pr.991 PU contrast adjustment** are displayed as simple mode parameters.

◆ User group function (Pr.160, Pr.172 to Pr.174)

- The user group function is a function for displaying only the parameters required for a setting.
- A maximum of 16 parameters from any of the parameters can be registered in a user group. When **Pr.160** = "1", reading/writing is enabled only for the parameters registered in user groups. (Parameters not registered in user groups can no longer be read.)
- To register a parameter in a user group, set the parameter number in **Pr.173**.
- To clear a parameter from a user group, set the parameter number in **Pr.174**. To batch clear all the registered parameters, set **Pr.172** = "9999".

◆ Registering a parameter in a user group (Pr.173)

- To register **Pr.3** in a user group

Operating procedure

1. Power ON

Make sure the motor is stopped.

2. Changing the operation mode

Press [PU/EXT] to choose the PU operation mode. [PU] indicator turns ON.

3. Selecting the parameter setting mode

Press [MODE] to choose the parameter setting mode. (The parameter number read previously appears)

4. Selecting a parameter

Turn ⊛ until "P. 173" (**Pr.173**) appears.

5. Parameter read

Press [SET]. "9999" appears.

6. Parameter registration

Turn ⊛ until "3" (**Pr.3**) appears. Press [SET] to register the parameter.

"P. 173" and "3" are displayed alternately.

To continue adding parameters, repeat steps 5 and 6.

上正科技有限公司
購買、維修 此手冊零組件
電話： 037-466333
Email: service@repairtw.com
Line id: @zzzz
www.repairtw.com

◆ Clearing a parameter from a user group (Pr.174)

- To delete **Pr.3** from a user group.

Operating procedure

1. Power ON

Make sure the motor is stopped.

2. Changing the operation mode

Press [PU EXT] to choose the PU operation mode. [PU] indicator turns ON.

3. Selecting the parameter setting mode

Press [MODE] to choose the parameter setting mode. (The parameter number read previously appears)

4. Selecting a parameter

Turn ⊛ until "P. 174" (**Pr.174**) appears.

5. Parameter read

Press [SET]. "9999" appears.

6. Clearing the parameter

Turn ⊛ until "3" (**Pr.3**) appears. Press [SET] to delete the parameter.

"P. 174" and "3" are displayed alternately.

To continue deleting parameters, repeat steps 5 and 6.

上正科技有限公司
購買、維修 此手冊零組件
電話： 037-466333
Email: service@repairtw.com
Line id: @2222
www.repairtw.com

NOTE

- **Pr.77 Parameter write selection, Pr.160, Pr.296 Password lock level, Pr.297 Password lock/unlock and Pr.991 PU contrast adjustment** can always be read regardless of the user group setting. (For **Pr.991**, only when the FR-LU08 or the FR-PU07 is connected.)
- **Pr.77, Pr.160, Pr.172 to Pr.174, Pr.296, and Pr.297** cannot be registered in a user group.
- When **Pr.174** is read, "9999" is always displayed. "9999" can be written, but it does not function.
- **Pr.172** is disabled if set to a value other than "9999".

Parameters referred to

Pr.15 Jog frequency, Pr.16 Jog acceleration/deceleration time ☞ page 248
Pr.77 Parameter write selection ☞ page 196
Pr.296 Password lock level, Pr.297 Password lock/unlock ☞ page 198
Pr.550 NET mode operation command source selection ☞ page 239
Pr.551 PU mode operation command source selection ☞ page 239
Pr.991 PU contrast adjustment ☞ page 191

5.4.18 PWM carrier frequency and Soft-PWM control

The motor sound can be changed.

Pr.	Name	Initial value	Setting range	Description
72 **E600**	**PWM frequency selection**	2	0 to 15*1	The PWM carrier frequency can be changed. The setting value represents the frequency in kHz. However, "0" indicates 0.7 kHz, "15" indicates 14.5 kHz, and "25" indicates 2.5 kHz. (The setting value "25" is for the sine wave filter only.)
			0 to 6, 25*2	
240 **E601**	**Soft-PWM operation selection**	1	0	Soft-PWM control disabled.
			1	Soft-PWM control enabled.
260 **E602**	**PWM frequency automatic switchover**	1	0	PWM carrier frequency automatic reduction function disabled (for the LD, ND, or HD rating).
			1	PWM carrier frequency automatic reduction function enabled.

*1 The setting range of the FR-F820-02330(55K) or lower and the FR-F840-01160(55K) or lower

*2 The setting range of the FR-F820-03160(75K) or higher and the FR-F840-01800(75K) or higher

5

◆ Changing the PWM carrier frequency (Pr.72)

- The PWM carrier frequency of the inverter can be changed.
- Changing the PWM carrier frequency can be effective for avoiding the resonance frequency of the mechanical system or motor, as a countermeasure against EMI generated from the inverter, or for reducing leakage current caused by PWM switching.
- Under PM motor control, the following carrier frequencies are used.

Pr.72 setting	Carrier frequency (kHz)
0 to 5	2
6 to 9	6*1
10 to 13	10*1
14, 15	14*1

上正科技有限公司
購買、維修 此手冊零組件
電話： 037-466333
Email: service@repairtw.com
Line Id: @2222
www.repairtw.com

*1 In the low-speed range (less than 10% of the rated motor frequency), the carrier frequency is automatically changed to 2 kHz (for the FR-F820-00490(11K) or lower and the FR-F840-00250(11K) or lower).

- When using an optional sine wave filter (MT-BSL/BSC), set "25" (2.5 kHz) in **Pr.72** (for the FR-F820-03160(75K) or higher and FR-F840-01800(75K) or higher).

NOTE

- In the low-speed range (about 10 Hz or lower), the carrier frequency may be automatically lowered. Motor noise increases, but not to the point of failure.
- When **Pr.72** = "25", the following limitations apply.
  - V/F control is forcibly set.
  - Soft-PWM control is disabled.
  - The maximum output frequency is 60 Hz.

◆ Soft-PWM control (Pr.240)

- Soft-PWM control is a function that changes the motor noise from a metallic sound into an inoffensive, complex tone.
- Setting **Pr.240** = "1" will enable the Soft-PWM control.
- To enable the Soft-PWM control, set **Pr.72** to 5 kHz or less for the FR-F820-02330(55K) or lower or the FR-F840-01160(55K) or lower. For the FR-F820-03160(75K) or higher or the FR-F840-01800(75K) or higher, set **Pr.72** to 4 kHz or less.

NOTE

- While a sine wave filter (**Pr.72** = "25") is being used, the Soft-PWM control is disabled.

◆ PWM carrier frequency automatic reduction function (Pr.260)

- Setting **Pr.260** = "1 (initial value)" will enable the PWM carrier frequency auto-reduction function. If a heavy load is continuously applied while the inverter carrier frequency is set to 3 kHz or higher (**Pr.72** ≥ "3"), the carrier frequency is automatically reduced to prevent occurrence of the Inverter overload trip (electronic thermal relay function) (E.THT). The carrier frequency is reduced to as low as 2 kHz. Motor noise increases, but not to the point of failure.
- When the carrier frequency automatic reduction function is used, operation with the carrier frequency set to 3 kHz or higher (**Pr.72** ≥ 3) automatically reduces the carrier frequency for heavy-load operation as shown below.

Pr.260 setting	Pr.570 setting	Carrier frequency automatic reduction operation
1	0 (SLD), 1 (LD)	The carrier frequency will reduce automatically with continuous operation of 85% of the inverter rated current or higher.
0	0 (SLD)	The carrier frequency will reduce automatically with continuous operation of 85% of the inverter rated current or higher.
	1 (LD)	Without carrier frequency automatic reduction (Perform continuous operation with the carrier frequency set to 2 kHz or lower or with less than 85% of the inverter rated current for the ND rating.)

NOTE

- Reducing the PWM carrier frequency is effective as a countermeasure against EMI from the inverter or for reducing leakage current, but doing so increases the motor noise.
- When the PWM carrier frequency is set to 1 kHz or lower (**Pr.72** ≤ 1), the increase in the harmonic current causes the fast-response current limit to activate before the stall prevention operation, which may result in torque shortage. In this case, disable the fast-response current limit in **Pr.156 Stall prevention operation selection**.

Parameters referred to

Pr.156 Stall prevention operation selection ☞ page 273
Pr.570 Multiple rating setting ☞ page 194
Pr.800 Control method selection ☞ page 169

上正科技有限公司
購買、維修 此手冊零組件
電話： 037-466333
Email: service@repairtw.com
Line Id: @2222
www.repairtw.com

5.4.19 Inverter parts life display

The degree of deterioration of the control circuit capacitor, main circuit capacitor, cooling fan, and inrush current limit circuit can be diagnosed on the monitor.

When a part approaches the end of its life, an alarm can be output by self diagnosis to prevent a fault.

(Note that the life diagnosis of this function should be used as a guideline only, because with the exception of the main circuit capacitor, the life values are theoretical calculations.)

Pr.	Name	Initial value	Setting range	Description
255 **E700**	**Life alarm status display**	0	(0 to 15)*1	Displays whether or not the parts of the control circuit capacitor, main circuit capacitor, cooling fan, and inrush current limit circuit have reached the life alarm output level. Read-only.
256 **E701***2	**Inrush current limit circuit life display**	100%	(0 to 100%)	Displays the deterioration degree of the inrush current limit circuit. Read-only.
257 **E702**	**Control circuit capacitor life display**	100%	(0 to 100%)	Displays the deterioration degree of the control circuit capacitor. Read-only.
258 **E703***2	**Main circuit capacitor life display**	100%	(0 to 100%)	Displays the deterioration degree of the main circuit capacitor. Read-only. The value measured by **Pr.259** is displayed.
259 **E704***2	**Main circuit capacitor life measuring**	0	0, 1 (2, 3, 8, 9)	Setting "1" and turning the power supply OFF starts the measurement of the main circuit capacitor life. If the setting value of **Pr.259** becomes "3" after turning the power supply ON again, it means that the measurement is completed. The deterioration degree is read to **Pr.258**.

*1 Valid values (read only) for separated converter type inverters are "0, 1, 4, and 5". The setting range (reading only) for IP55 compatible modes is "0 to 31".

*2 The setting is available only for standard models and IP55 compatible models.

◆ Life alarm display and signal output (Y90 signal, Pr.255)

Point

- In the life diagnosis of the main circuit capacitor, the Life alarm (Y90) signal is not output unless measurement by turning OFF the power supply is performed.

- Whether or not the parts of the control circuit capacitor, main circuit capacitor, cooling fan, inrush current limit circuit or internal air circulation fans have reached the life alarm output level can be checked with **Pr.255 Life alarm status display** and the Life alarm (Y90) signal. (Internal air circulation fans are equipped with IP55 compatible models.)

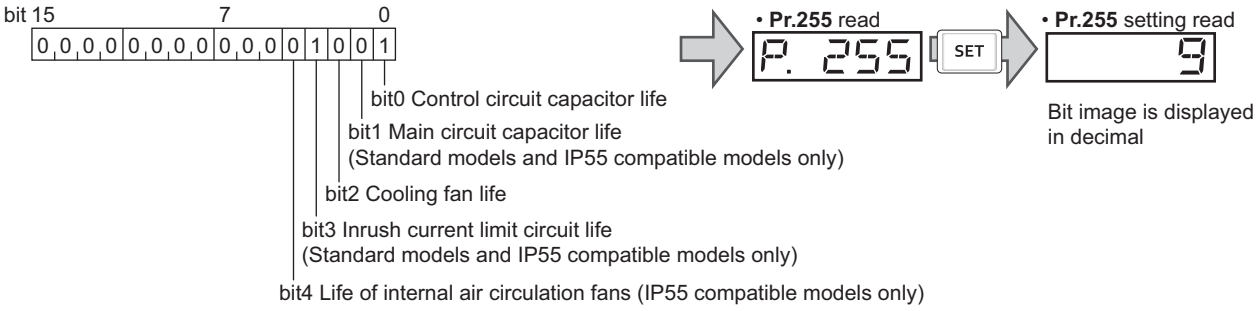

Pr.255		bit4	bit3:	bit 2	bit 1	bit 0	Pr.255		bit4	bit3:	bit 2	bit 1	bit 0
Decimal	Binary						Decimal	Binary					
15	1111	×	○	○	○	○	31	11111	○	○	○	○	○
14	1110	×	○	○	○	×	30	11110	○	○	○	○	×
13	1101	×	○	○	×	○	29	11101	○	○	○	×	○
12	1100	×	○	○	×	×	28	11100	○	○	○	×	×
11	1011	×	○	×	○	○	27	11011	○	○	×	○	○
10	1010	×	○	×	○	×	26	11010	○	○	×	○	×
9	1001	×	○	×	×	○	25	11001	○	○	×	×	○
8	1000	×	○	×	×	×	24	11000	○	○	×	×	×
7	0111	×	×	○	○	○	23	10111	○	×	○	○	○
6	0110	×	×	○	○	×	22	10110	○	×	○	○	×
5	0101	×	×	○	×	○	21	10101	○	×	○	×	○
4	0100	×	×	○	×	×	20	10100	○	×	○	×	×
3	0011	×	×	×	○	○	19	10011	○	×	×	○	○
2	0010	×	×	×	○	×	18	10010	○	×	×	○	×
1	0001	×	×	×	×	○	17	10001	○	×	×	×	○
0	0000	×	×	×	×	×	16	10000	○	×	×	×	×

○: Parts reaching alarm output level ×: Parts not reaching alarm output level

上正科技有限公司
購買、維修 此手冊零件
電話： 037-466333
Email: service@repairtw.com
Line id: @zzzz
www.repairtw.com

- The Life alarm (Y90) signal turns ON when any of the control circuit capacitor, main circuit capacitor, cooling fan, inrush current limit circuit or internal air circulation fans reaches the life alarm output level.
- For the terminal used for the Y90 signal, set "90" (positive logic) or "190" (negative logic) in any of **Pr.190 to Pr.196 (output terminal function selection)**.

NOTE

- When using an option (FR-A8AY, FR-A8AR, FR-A8NC, FR-A8NCE), the life can be output separately to the Control circuit capacitor life (Y86) signal, Main circuit capacitor life (Y87) signal, Cooling fan life (Y88) signal, and Inrush current limit circuit life (Y89) signal.
- Changing the terminal assignment using **Pr.190 to Pr.196 (Output terminal function selection)** may affect the other functions. Set parameters after confirming the function of each terminal.

◆ Life display of the inrush current limit circuit (Pr.256) (Standard models and IP55 compatible models)

- The life of the inrush current limit circuit (relay, contactor and inrush resistor) is displayed in **Pr.256**.

- The number of contact (relay, contactor, thyristor) ON times is counted, and it is counted down from 100% (0 time) every 1%/10,000 times. When the counter reaches 10% (900,000 times), bit 3 of **Pr.255** is turned ON (set to 1) and the Y90 signal is also output as an alert.

◆ Life display of the control circuit capacitor (Pr.257)

- The deterioration degree of the control circuit capacitor is displayed in **Pr.257**.
- In the operating status, the control circuit capacitor life is calculated from the energization time and temperature, and is counted down from 100%. When the counter goes down from 10%, bit 0 of **Pr.255** is turned ON (set to 1) and the Y90 signal is also output as an alert.

◆ Life display of the main circuit capacitor (Pr.258, Pr.259) (Standard models and IP55 compatible models)

Point

- For accurate life measurement of the main circuit capacitor, wait three hours or longer after turning OFF. The temperature left in the main circuit capacitor affects measurement.

- The deterioration degree of the main circuit capacitor is displayed in **Pr.258**.
- With the main circuit capacitor capacity at factory shipment as 100%, the capacitor life is displayed in **Pr.258** every time measurement is made. When the measured value falls to 85% or lower, bit 1 of **Pr.255** is turned ON (set to 1) and the Y90 signal is also output as an alert.
- Measure the capacitor capacity according to the following procedure and check the deterioration degree of the capacitor capacity.

1. Check that the motor is connected and at a stop.
2. Set "1" (measuring start) in **Pr.259**.
3. Switch the power OFF. The inverter applies DC voltage to the motor to measure the capacitor capacity while the inverter is OFF.
4. After confirming that the power lamp is OFF, turn ON the power again.
5. Check that "3" (measurement complete) is set in **Pr.259**, read **Pr.258**, and check the deterioration degree of the main circuit capacitor.

上正科技有限公司
購買、維修 此手冊零組件
電話: 037-466333
Email: service@repairtw.com
Line id: @zzzz
www.repairtw.com

Pr.259	Description	Remarks
0	No measurement	Initial value
1	Start measurement	Measurement starts when the power supply is switched OFF.
2	During measurement	Only displayed and cannot be set.
3	Measurement complete	
8	Forced end	
9	Measurement error	

NOTE

- When the main circuit capacitor life is measured under the following conditions, "forced end" (**Pr.259** = "8"), or "measurement error" (**Pr.259** = "9") may occur, or the status may remain in "measurement start" (**Pr.259** = "1"). To perform measurement, first eliminate the following conditions. Under the following conditions, even if "measurement complete" (**Pr.259** = "3") is reached, measurement cannot be performed correctly.
  - FR-HC2, FR-CV, MT-RC, or a sine wave filter is connected.
  - Terminals R1/L11, S1/L21 or DC power supply is connected to terminals P/+ and N/-.
  - The power supply is switched ON during measurement.
  - The motor is not connected to the inverter.
  - The motor is running (coasting).
  - The motor capacity is smaller than the inverter capacity by two ranks or more.
  - The inverter output is shut off or a fault occurred while the power was OFF.
  - The inverter output is shut off with the MRS signal.
  - The start command is given while measuring.
  - The applied motor setting is incorrect.
- Operation environment: Surrounding air temperature (annual average of 40°C (free from corrosive gas, flammable gas, oil mist, dust and dirt)).
  Output current: 80% of the inverter rating
- Since repeated inrush currents at power ON will shorten the life of the converter circuit, frequent starts and stops of the magnetic contactor must be avoided.

5

⚠WARNING

- When measuring the main circuit capacitor capacity (**Pr.259** = "1"), the DC voltage is applied to the motor for about 1 second at power OFF. Never touch the motor terminal, etc. right after powering OFF to prevent an electric shock.

上正科技有限公司
購買 維修 此手冊零組件
電話： 037-466333
Email: service@repairtw.com
Line id: @777
www.repairtw.com

◆ Life display of the cooling fan

- If a cooling fan speed of less than the specified speed (refer below) is detected, the indication of the Fan alarm "FN" (FN) is displayed on the operation panel or the parameter unit. As an alert output, bit 2 of **Pr.255** is turned ON (set to 1), and the Y90 signal and Alarm (LF) signal are also output.
- For the terminal used for the LF signal, set "98" (positive logic) or "198" (negative logic) in any of **Pr.190 to Pr.196 (Output terminal function selection)**.

Capacity	Fan alarm output level
FR-F820-00250(5.5K) or lower, FR-F820-03160(75K) or higher, FR-F840-00126(5.5K) or lower	Less than 50% of the rated rotations per minute
FR-F820-00340(7.5K) to FR-F820-02330(55K) FR-F840-00170(7.5K) to FR-F840-03610(160K) FR-F846-00023(0.75K) to FR-F846-03610(160K)	Less than 70% of the rated rotations per minute
FR-F840-04320(185K) or higher, FR-F842-07700(355K) or higher	Less than 1700 r/min

NOTE

- When the inverter is mounted with two or more cooling fans, "FN" is displayed even only one of the fans is detected.
- Changing the terminal assignment using **Pr.190 to Pr.196 (Output terminal function selection)** may affect the other functions. Set parameters after confirming the function of each terminal.
- For replacement of each part, contact the nearest Mitsubishi FA center.

◆ Life display of internal air circulation fans (IP55 compatible models)

- IP55 compatible models are equipped with the internal air circulation fan inside the inverter other than the cooling fan. The internal fan fault "FN2" (FN2) appears on the operation panel (FR-DU08) when the rotations per minute is less than 70% of the rated value for the internal air circulation fan. (FN is displayed on the parameter unit (FR-PU07).) As an alarm display, **Pr.255** bit 4 is turned ON and also a warning is output to the Y90 signal and Alarm (LF) signal.
- For the terminal used for the LF signal, set "98" (positive logic) or "198" (negative logic) in any of **Pr.190 to Pr.196 (Output terminal function selection)**.

NOTE

- Changing the terminal assignment using **Pr.190 to Pr.196 (Output terminal function selection)** may affect the other functions. Set parameters after confirming the function of each terminal.
- For replacement of each part, contact the nearest Mitsubishi FA center.

5.4.20 Maintenance timer alarm

The Maintenance timer signal (Y95) signal is output when the inverter's cumulative energization time reaches the time period set with the parameter.

MT1, MT2 or MT3 is displayed on the operation panel.

This can be used as a guideline for the maintenance time of peripheral devices.

Pr.	Name	Initial value	Setting range	Description
503 **E710**	**Maintenance timer 1**	0	0 (1 to 9998)	Displays the inverter's cumulative energization time in increments of 100 h (read-only). Writing the setting of "0" clears the cumulative energization time while **Pr.503** = "1 to 9998". (Writing is disabled when **Pr.503** = "0".)
504 **E711**	**Maintenance timer 1 warning output set time**	9999	0 to 9998	Set the time until the Maintenance timer signal (Y95) signal is output. "MT1" is displayed on the operation panel.
			9999	Without the function
686 **E712**	**Maintenance timer 2**	0	0 (1 to 9998)	The same function as **Pr.503**.
687 **E713**	**Maintenance timer 2 warning output set time**	9999	0 to 9998	The same function as **Pr.504**. "MT2" is displayed on the operation panel.
			9999	
688 **E714**	**Maintenance timer 3**	0	0 (1 to 9998)	The same function as **Pr.503**.
689 **E715**	**Maintenance timer 3 warning output set time**	9999	0 to 9998	The same function as **Pr.504**. "MT3" is displayed on the operation panel.
			9999	

上正科技有限公司
購買、維修 此手冊適用
電話： 037-466333
Email: service@repairtw.com
Line id: @zzzz
www.repairtw.com

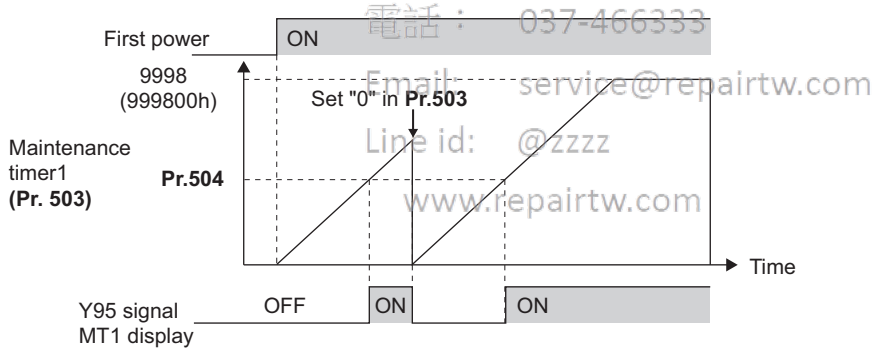

Operation example of the maintenance timer 1 (**Pr.503, Pr.504**) (with both MT2 and MT3 OFF)

- The cumulative energization time of the inverter is stored in the EEPROM every hour and displayed in **Pr.503 (Pr.686, Pr.688)** in 100 h increments. **Pr.503 (Pr.686, Pr.688)** is clamped at 9998 (999800 h).
- When the value in **Pr.503 (Pr.686, Pr.688)** reaches the time (100 h increments) set in **Pr.504 (Pr.687, Pr.689)**, the Maintenance timer (Y95) signal is output, and also "MT 1" (MT1), "MT 2" (MT2), or "MT 3" (MT3) is displayed on the operation panel.
- For the terminal used for the Y95 signal output, assign the function by setting "95 (positive logic)" or "195 (negative logic)" in any of **Pr.190 to Pr.196 (Output terminal function selection)**.

NOTE

- The Y95 signal turns ON when any of MT1, MT2 or MT3 is activated. It does not turn OFF unless all of MT1, MT2 and MT3 are cleared.
- If all of MT1, MT2 and MT3 are activated, they are displayed in the priority of "MT1 > MT2 > MT3".
- The cumulative energization time is counted every hour. Energization time of less than 1 h is not counted.
- Changing the terminal assignment using **Pr.190 to Pr.196 (Output terminal function selection)** may affect the other functions. Set parameters after confirming the function of each terminal.

Parameters referred to
Pr.190 to Pr.196 (Output terminal function selection) page 312

5.4.21 Current average value monitor signal

The output current average value during constant-speed operation and the maintenance timer value are output to the Current average monitor signal (Y93) signal as a pulse. The output pulse width can be used in a device such as the I/O unit of a programmable controller as a guideline for the maintenance time for mechanical wear, belt stretching, or deterioration of devices with age.

The pulse is repeatedly output during constant-speed operation in cycles of 20 seconds to the Current average value monitor (Y93) signal.

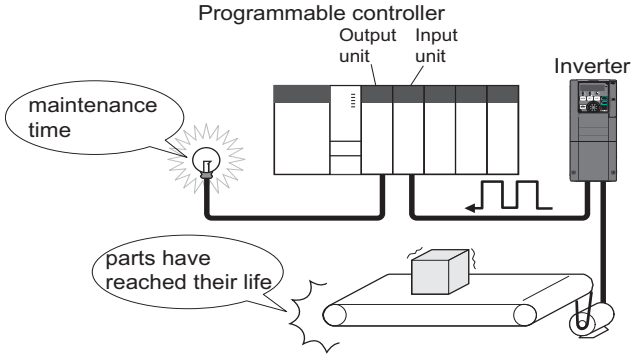

Pr.	Name	Initial value	Setting range	Description
555 **E720**	**Current average time**	1 s	0.1 to 1 s	Set the time for calculating the average current during start pulse output (1 second).
556 **E721**	**Data output mask time**	0 s	0 to 20 s	Set the time for not obtaining (masking) transitional state data.
557 **E722**	**Current average value monitor signal output reference current**	Inverter rated current	0 to 500 A*1 0 to 3600 A*2	Set the reference (100%) for outputting the output current average value signal.

*1 For the FR-F820-02330(55K) or lower, and FR-F840-01160(55K) or lower.
*2 For the FR-F820-03160(75K) or higher, and FR-F840-01800(75K) or higher.

上正科技有限公司
購買、維修 此手冊零組件
電話： 037-466333
Email: service@repairtw.com
Line id: @zzzz
www.repairtw.com

◆ Operation example

- The pulse output of the Current average monitor signal (Y93) signal is indicated below.
- For the terminal used for the Y93 signal output, assign the function by setting "93 (positive logic)" or "193 (negative logic)" in any of **Pr.190 to Pr.194 (Output terminal function selection)**. (This cannot be assigned by setting in **Pr.195 ABC1 terminal function selection or Pr.196 ABC2 terminal function selection**.)

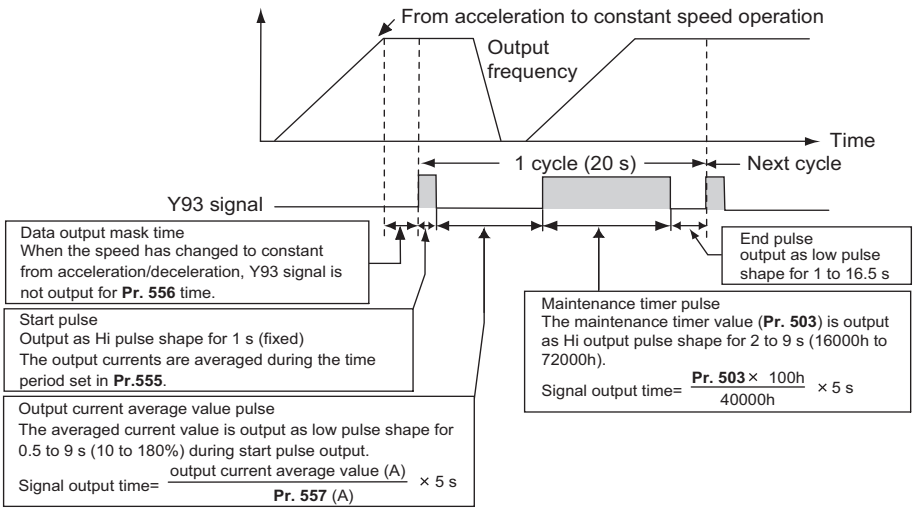

◆ Pr.556 Data output mask time setting

- Immediately after acceleration/deceleration is shifted to constant-speed operation, the output current is unstable (transitional state). Set the time for not obtaining (masking) transitional state data in **Pr.556**.

◆ Pr.555 Current average time setting

- The output current average is calculated during start pulse (1 second) HIGH output. Set the time for calculating the average current during start pulse output in **Pr.555**.

◆ Pr.557 Current average value monitor signal output reference current setting

Set the reference (100%) for outputting the output current average value signal. The signal output time is calculated with the following formula.

$$\frac{\text{Output current average value}}{\textbf{Pr.557}\text{ setting value}} \times 5\text{ s} \quad \text{(Output current average value 100\%/5 s)}$$

The output time range is 0.5 to 9 seconds. When the output current average value is less than 10% of the setting value in **Pr.557**, the output time is 0.5 seconds, and when it is more than 180%, the output time is 9 seconds.
For example, when **Pr.557** = 10 A and the output current average value is 15 A:
15 A/10 A × 5 s = 7.5 s, thus the Current average monitor signal signal is Low output in 7.5 seconds intervals.

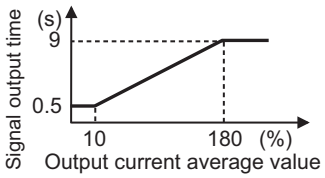

◆ Pr.503 Maintenance timer 1 output

上正科技有限公司
購買、維修 此手冊零組件
電話： 037-466333
Email: service@repairtw.com
Line id: @zzzz
www.repairtw.com

After LOW output of the output current value is performed, HIGH output of the maintenance timer value is performed. The maintenance timer value output time is calculated with the following formula.

$$\frac{\textbf{Pr.530} \times 100}{40000\text{h}} \times 5\text{ s} \quad \text{(Maintenance timer value 100\%/5 s)}$$

The output time range is 2 to 9 seconds. When **Pr.503** is less than 16000 hours, the output time is 2 seconds. When it is more than 72000 hours, the output time is 9 seconds.

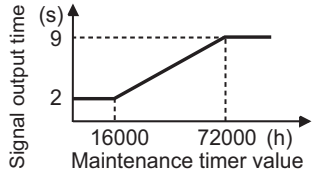

NOTE

- Masking of the data output and sampling of the output current are not performed during acceleration/deceleration.
- If constant speed changes to acceleration or deceleration during start pulse output, it is judged as invalid data, and HIGH output in 3.5 seconds intervals is performed for the start pulse and LOW output in 16.5 seconds intervals is performed for the end signal. After the start pulse output is completed, minimum 1-cycle signal output is performed even if acceleration/deceleration is performed.

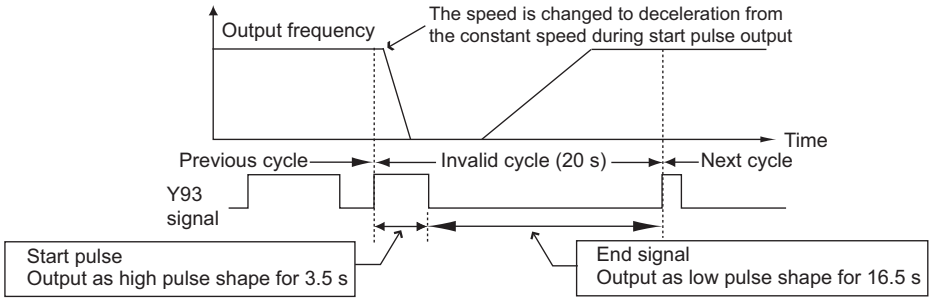

- If the output current value (inverter output current monitor) is 0 A at the completion of the 1-cycle signal output, no signal is output until the next constant-speed state.
- Under the following conditions, the Y93 signal is output with LOW output in 20 seconds intervals (no data output).
  - When acceleration or deceleration is operating at the completion of the 1-cycle signal output
  - When automatic restart after instantaneous power failure (**Pr.57 Restart coasting time** ≠ "9999") is set, and the 1-cycle signal output is completed during the restart operation.
  - When automatic restart after instantaneous power failure (**Pr.57** ≠ "9999") is set, and the restart operation was being performed at the completion of data output masking.
- **Pr.686 Maintenance timer 2 and Pr.688 Maintenance timer 3** cannot be output.
- Changing the terminal assignment using **Pr.190 to Pr.196 (Output terminal function selection)** may affect the other functions. Set parameters after confirming the function of each terminal.

版權所有翌揚企業
購買、維修 此手冊零組件
電話： 037-466333
Email: service@repairtw.com
Line id: @zzzz
www.repairtw.com

Parameters referred to

Pr.57 Restart coasting time ☞ page 446, page 451
Pr.190 to Pr.196 (Output terminal function selection) ☞ page 312
Pr.503 Maintenance timer 1, Pr.686 Maintenance timer 2, Pr.688 Maintenance timer 3 ☞ page 212

5.5 (F) Setting of acceleration/deceleration time and acceleration/deceleration pattern

Purpose	Parameter to set			Refer to page
To set the motor acceleration/deceleration time	Acceleration/deceleration time	P.F000 to P.F003, P.F010, P.F011, P.F020 to P.F022, P.F070, P.F071	Pr.7, Pr.8, Pr.16, Pr.20, Pr.21, Pr.44, Pr.45, Pr.147, Pr.611, Pr.791, Pr.792	216
To set the acceleration/deceleration pattern suitable for an application	Acceleration/deceleration pattern and backlash measures	P.F100, P.F200 to P.F203	Pr.29, Pr.140 to Pr.143	219
To command smooth speed transition with terminals	Remote setting function	P.F101	Pr.59	222
Starting frequency	Starting frequency and start-time hold	P.F102, P.F103	Pr.13, Pr.571	225, 226

5.5.1 Setting the acceleration and deceleration time

The following parameters are used to set motor acceleration/deceleration time.

Set a larger value for a slower acceleration/deceleration, or a smaller value for a faster acceleration/deceleration.

For the acceleration time at automatic restart after instantaneous power failure, refer to **Pr.611 Acceleration time at a restart** (on page 446 and page 451).

上正科技有限公司
購買、維修、此手冊零組件
電話： 037-466333
Email: service@repairtw.com
Line id: @zzzz
www.repairtw.com

Pr.	Name	Initial value FM	Initial value CA	Setting range	Description
20 F000	Acceleration/deceleration reference frequency	60 Hz	50 Hz	1 to 590 Hz	Set the frequency that is the basis of acceleration/deceleration time. As acceleration/deceleration time, set the time required to change the frequency from a stop status (0 Hz) to the frequency set in **Pr.20** and vice versa.
21 F001	Acceleration/deceleration time increments	0		0 1	Increment: 0.1 s Increment: 0.01 s Select the increment for the acceleration/deceleration time setting.
16 F002	Jog acceleration/deceleration time	0.5 s		0 to 3600 s	Set the acceleration/deceleration time (time required to change the frequency from a stop status (0 Hz) to the frequency set in **Pr.20** and vice versa) for JOG operation. (Refer to page 248.)
611 F003	Acceleration time at a restart	9999		0 to 3600 s	Set the acceleration time for restart (from stop status to **Pr.20**).
				9999	Standard acceleration time (for example, **Pr.7**) is applied as the acceleration time at restart. (Refer to page 446 and page 451.)
7 F010	Acceleration time	5 s*1 15 s*2		0 to 3600 s	Set the motor acceleration time (time required to change the frequency from a stop status (0 Hz) to the frequency set in **Pr.20**).
8 F011	Deceleration time	10 s*1 30 s*1		0 to 3600 s	Set the motor deceleration time (time required to change the frequency from the frequency set in **Pr.20** to stop status (0 Hz)).
44 F020	Second acceleration/deceleration time	5 s		0 to 3600 s	Set the acceleration/deceleration time used while the RT signal is ON.
45 F021	Second deceleration time	9999		0 to 3600 s	Set the deceleration time used while the RT signal is ON.
				9999	The acceleration time applies to the deceleration time.
147 F022	Acceleration/deceleration time switching frequency	9999		0 to 590 Hz	Set the frequency where the acceleration/deceleration time switches to the time set in **Pr.44** and/or **Pr.45**.
				9999	Function disabled.
791 F070	Acceleration time in low-speed range	9999		0 to 3600 s	Set the acceleration time in a low-speed range (less than 1/10 of the rated motor frequency).
				9999	The acceleration time set in **Pr.7** is applied. (While the RT signal is ON, the second function is enabled.)

Pr.	Name	Initial value		Setting range	Description
		FM	CA		
792 **F071**	**Deceleration time in low-speed range**	9999		0 to 3600 s	Set the deceleration time in a low-speed range (less than 1/10 of the rated motor frequency).
				9999	The deceleration time set in **Pr.8** is applied. (While the RT signal is ON, the second function is enabled.)

*1 For the FR-F820-00340(7.5K) or lower, and FR-F840-00170(7.5K) or lower.
*2 For the FR-F820-00490(11K) or higher, and FR-F840-00250(11K) or higher.

◆ Control block diagram

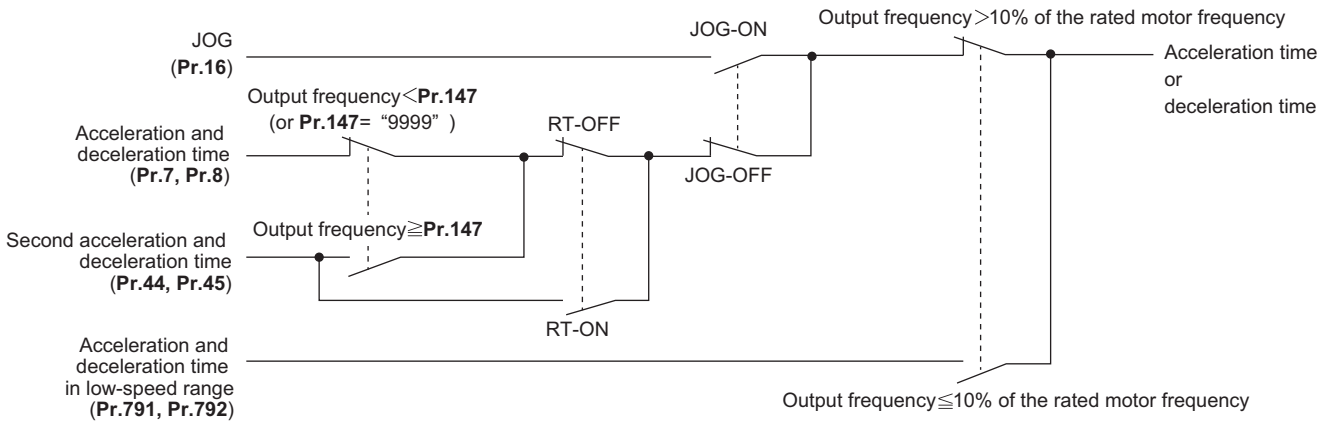

◆ Acceleration time setting (Pr.7, Pr.20)

上正科技有限公司
購買、維修、此手冊零組件
電話： 037-466333
Email: service@repairtw.com
Line Id: @zzzz
www.repairtw.com

- Use **Pr.7 Acceleration time** to set the acceleration time required to change the frequency to the frequency set in **Pr.20 Acceleration/deceleration reference frequency** from stop status.
- Set the acceleration time according to the following formula.

Acceleration time setting = **Pr.20** setting × (Acceleration time to change the frequency from stop status to maximum frequency) / (Maximum frequency - **Pr.13** setting)

- For example, the following calculation is performed to find the setting value for **Pr.7** when increasing the output frequency to the maximum frequency of 50 Hz in 10 seconds with **Pr.20** = 60 Hz (initial value) and **Pr.13** = 0.5 Hz.

Pr.7 setting = 60 Hz × 10 s / (50 Hz - 0.5 Hz) ≈ 12.1 s

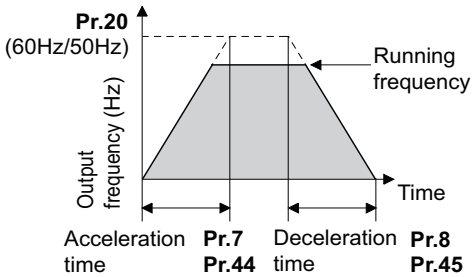

◆ Acceleration time setting (Pr.8, Pr.20)

- Use **Pr.8 Deceleration time** to set the deceleration time required to change the frequency to a stop status from the frequency set in **Pr.20 Acceleration/deceleration reference frequency**.
- Set the deceleration time according to the following formula.

Deceleration time setting = **Pr.20** setting × (Deceleration time to change the frequency from maximum frequency to stop status) / (Maximum frequency - **Pr.10** setting)

- For example, the following calculation is used to find the setting value for **Pr.8** when increasing the output frequency to the maximum frequency of 50 Hz in 10 seconds with **Pr.20** = 120 Hz and **Pr.10** = 3 Hz.

Pr.8 setting = 120 Hz × 10 s / (50 Hz - 3 Hz) ≈ 25.5 s

NOTE

- If the acceleration/deceleration time is set, the actual motor acceleration/deceleration time cannot be made shorter than the shortest acceleration/deceleration time determined by the mechanical system J (moment of inertia) and motor torque.
- If the **Pr.20** setting is changed, the **Pr.125** and **Pr.126** (frequency setting signal gain frequency) settings do not change. Set **Pr.125** and **Pr.126** to adjust the gains.
- Under PM motor control, if the protective function (E.OLT) is activated due to insufficient torque in the low-speed range, set longer acceleration/deceleration times only in the low-speed range in **Pr.791 Acceleration time** in low-speed range and **Pr.792 Deceleration time in low-speed range**.

◆ Changing the minimum increment of the acceleration/deceleration time (Pr.21)

- Use **Pr.21** to set the minimum increment of the acceleration/deceleration time.
  Setting value "0 (initial value)": minimum increment 0.1 second
  Setting value "1": minimum increment 0.01 second
- **Pr.21** setting allows the minimum increment of the following parameters to be changed.
  Pr.7, Pr.8, Pr.16, Pr.44, Pr.45, Pr.111, Pr.264, Pr.265, Pr.582, Pr.583, Pr.791, Pr.792, Pr.1477, Pr.1478

NOTE

- **Pr.21** setting does not affect the minimum increment setting of **Pr.611 Acceleration time at a restart**.
- The FR-DU08 and the FR-PU07 provide a five-digit readout (including the number of decimal places) on a value of parameters. Therefore, a value of "1000" or larger is set/displayed only in increments of 0.1 second even if **Pr.21** = "1".

◆ Setting multiple acceleration/deceleration times (RT signal, Pr.44, Pr.45, Pr.147)

上正科技有限公司
購買、維修、此手冊零組件
電話： 037-466333
Email: service@repairtw.com
Line id: @zzzz
www.repairtw.com

- **Pr.44** and **Pr.45** are applied when the RT signal is ON or when the output frequency is equal to or higher than the frequency set in **Pr.147 Acceleration/deceleration time switching frequency**.
- Even at the frequency lower than the **Pr.147** setting, turning ON the RT signal switches the acceleration/deceleration time to the second acceleration/deceleration time. The priority of the signals and settings is as follows: RT signal > **Pr.147** setting.
- When "9999" is set in **Pr.45**, the deceleration time becomes equal to the acceleration time (time set in **Pr.44**).
- While the **Pr.147** setting is equal to or less than the setting of **Pr.10 DC injection brake operation frequency** or the **Pr.13 Starting frequency**, the time used as the acceleration/deceleration time switches to the time set in **Pr.44 (Pr.45)** when the output frequency reaches or exceeds the **Pr.10** or **Pr.13** setting.

Pr.147 setting	Setting applied to the acceleration/deceleration time	Description
9999 (initial value)	**Pr.7, Pr.8**	Acceleration/deceleration time is not automatically changed.
0.00 Hz	**Pr.44, Pr.45**	Second acceleration/deceleration time is applied from the start.
0.01 Hz ≤ **Pr.147** setting ≤ Set frequency	Output frequency < **Pr.147** setting: **Pr.7, Pr.8** **Pr.147** setting ≤ Output frequency: **Pr.44, Pr.45**	Acceleration/deceleration time is automatically changed.
Set frequency < **Pr.147** setting	**Pr.7, Pr.8**	Not changed as the frequency has not reached the switchover frequency.

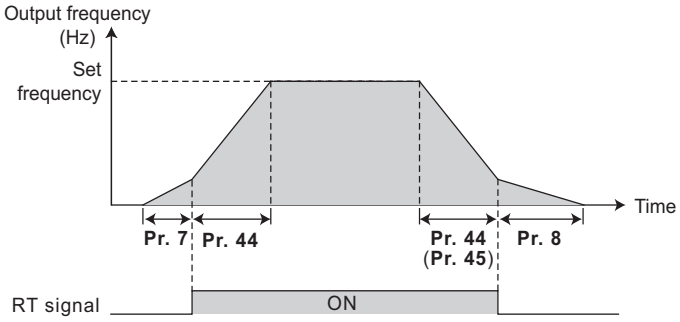

NOTE

- The reference frequency during acceleration/deceleration depends on the setting of **Pr.29 Acceleration/deceleration pattern selection**. (Refer to page 219.)
- The RT signal can be assigned to an input terminal by setting **Pr.178 to Pr.189 (Input terminal function selection)**. Changing the terminal assignment may affect other functions. Set parameters after confirming the function of each terminal.
- The RT signal is the Second function selection signal. The RT signal also enables other second functions. (Refer to page 358.)
- The RT signal is assigned to terminal RT in the initial status. Set "3" in one of **Pr.178 to Pr.189 (Input terminal function selection)** to assign the RT signal to another terminal.

◆ Setting the acceleration/deceleration time in the low-speed range (Pr.791, Pr.792)

- If torque is required in the low-speed range (less than 10% of the rated motor frequency) under PM motor control, set a value larger than the setting of **Pr.7 Acceleration time (Pr.8 Deceleration time)** in **Pr.791 Acceleration time in low-speed range (Pr.792 Deceleration time in low-speed range)** so that the mild acceleration/deceleration is performed in the low-speed range. (When the RT signal is turned ON, the second acceleration/deceleration time is prioritized.)

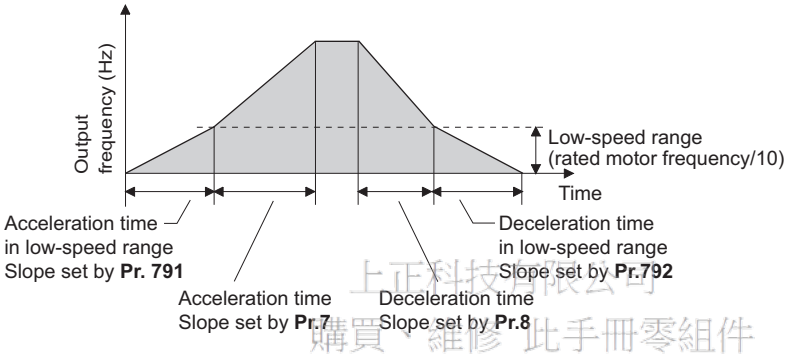

上正科技有限公司
購買、維修 此手冊零組件
電話： 037-466333
Email: service@repairtw.com
Line id: @zzzz
www.repairtw.com

NOTE

- Set **Pr.791 (Pr.792)** to a value larger than the **Pr.7 (Pr.8)** setting. If a value smaller than **Pr.7 (Pr.8)** is set in **Pr.791 (Pr.792)**, the **Pr.791 (Pr.792)** setting is regarded as the same setting as the **Pr.7 (Pr.8)** setting.
- Refer to page 615 for the rated motor frequency of the MM-EFS or MM-THE4 motor.

Parameters referred to

Pr.3 Base frequency ☞ page 528
Pr.10 DC injection brake operation frequency ☞ page 535
Pr.29 Acceleration/deceleration pattern selection ☞ page 219
Pr.125, Pr.126 (frequency setting gain frequency) ☞ page 339
Pr.178 to Pr.189 (Input terminal function selection) ☞ page 355
Pr.264 Power-failure deceleration time 1, Pr.265 Power-failure deceleration time 2 ☞ page 458

5.5.2 Acceleration/deceleration pattern

The acceleration/deceleration pattern can be set according to the application.

In addition, the backlash measures that stop acceleration/deceleration by the frequency or time set with parameters at acceleration/deceleration can be set.

Pr.	Name	Initial value	Setting range	Description
29 **F100**	**Acceleration/deceleration pattern selection**	0	0	Linear acceleration/deceleration
			1	S-pattern acceleration/deceleration A
			2	S-pattern acceleration/deceleration B
			3	Backlash measure
			6	Variable-torque acceleration/deceleration
140 **F200**	**Backlash acceleration stopping frequency**	1 Hz	0 to 590 Hz	Set the stopping frequency and time during backlash measures. Valid by backlash measures (**Pr.29** = "3").
141 **F201**	**Backlash acceleration stopping time**	0.5 s	0 to 360 s	
142 **F202**	**Backlash deceleration stopping frequency**	1 Hz	0 to 590 Hz	
143 **F203**	**Backlash deceleration stopping time**	0.5 s	0 to 360 s	

◆ Linear acceleration/deceleration (Pr.29 = "0 (initial value)")

- When the frequency is changed for acceleration, deceleration, etc. during inverter operation, the output frequency is changed linearly (linear acceleration/deceleration) to reach the set frequency without straining the motor and inverter. Linear acceleration/deceleration has a uniform frequency/time slope.

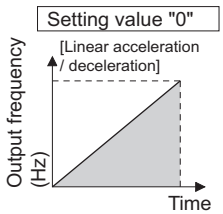

◆ S-pattern acceleration/deceleration A (Pr.29 = "1")

- Use this when acceleration/deceleration is required for a short time until a high-speed area equal to or higher than the base frequency, such as for the main shaft of the machine.
- The acceleration/deceleration pattern has the **Pr.3 Base frequency** (**Pr.84 Rated motor frequency** under PM motor control) (fb) as the point of inflection in an S-pattern curve, and the acceleration/deceleration time can be set to be suitable for the motor torque reduction in the constant-power operation range at the base frequency (fb) or more.

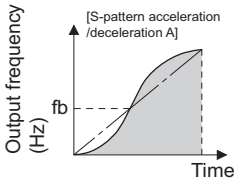

上正科技有限公司
購買、維修 此手冊零組件
電話： 037-460333
Email: service@repairtw.com
Line id: @ezzz
www.repairtw.com

- Acceleration/deceleration time calculation method when the set frequency is equal to or higher than the base frequency

Acceleration time $t = (4/9) \times (T/fb^2) \times f^2 + (5/9) \times T$
Where T is the acceleration/deceleration time (s), f is the set frequency (Hz), and fb is the base frequency (rated motor frequency)

- Reference (0 Hz to set frequency) of acceleration/deceleration time when **Pr.3** = 60 Hz

Acceleration/deceleration time (s)	Set frequency (Hz)			
	60	120	200	400
5	5	12	27	102
15	15	35	82	305

NOTE

- For the acceleration/deceleration time setting of the S-pattern acceleration/deceleration A, set the time to **Pr.3** (**Pr.84** under PM motor control) instead of **Pr.20 Acceleration/deceleration reference frequency**.

◆ S-pattern acceleration/deceleration B (Pr.29 = "2")

- This is useful for preventing collapsing stacks such as on a conveyor. S-pattern acceleration/deceleration B can reduce the impact during acceleration/deceleration by accelerating/decelerating while maintaining an S-pattern from the present frequency (f2) to the target frequency (f1).

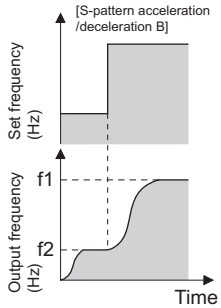

NOTE

- When the RT signal turns ON during acceleration or deceleration with the S-pattern acceleration/deceleration B enabled, a pattern of acceleration or deceleration changes to linear at the moment.

◆ Backlash measures (Pr.29 = "3", Pr.140 to Pr.143)

- Reduction gears have an engagement gap and have a dead zone between forward rotation and reverse rotation. This dead zone is called backlash, and this gap disables a mechanical system from following motor rotation. More specifically, a motor shaft develops excessive torque when the direction of rotation changes or when constant-speed operation shifts to deceleration, resulting in a sudden motor current increase or regenerative status.
- To avoid backlash, acceleration/deceleration is temporarily stopped. Set the acceleration/deceleration stopping frequency and time in **Pr.140 to Pr.143**.

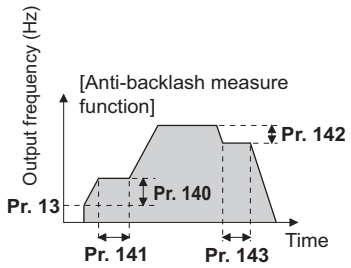

NOTE

- Setting the backlash measures increases the acceleration/deceleration time by the stopping time.

上正科技有限公司
購買、維修 此手冊零組件
電話： 037-466333
Email: service@repairtw.com
Line id: @zzzz
www.repairtw.com

◆ Variable-torque acceleration/deceleration (Pr.29 = "6")

- This function is useful for variable-torque load such as a fan and blower to accelerate/decelerate in short time. Linear acceleration/deceleration is performed in the area where the output frequency > base frequency.

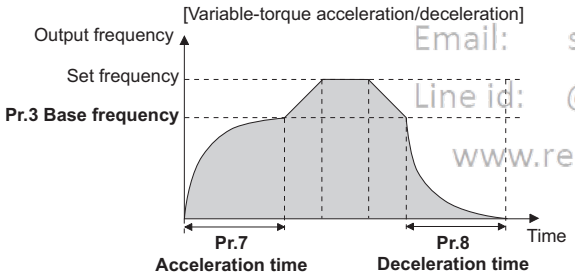

NOTE

- When the base frequency is out of the range 45 to 65 Hz, the linear acceleration/deceleration is performed even if **Pr.29** = "6".
- Even if **Pr.14 Load pattern selection** = "1 (variable torque load)", variable torque acceleration/deceleration setting is prioritized and the inverter operates as **Pr.14** = "0 (constant torque load)".
- For the variable torque acceleration/deceleration time setting, set the time period to reach **Pr.3 Base frequency**. (Not the time period to reach **Pr.20 Acceleration/deceleration reference frequency**.)
- The variable torque acceleration/deceleration is disabled during PM motor control. (Linear acceleration/deceleration is performed.)

Parameters referred to

Pr.3 Base frequency ☞ page 528
Pr.7 Acceleration time, Pr.8 Deceleration time, Pr.20 Acceleration/deceleration reference frequency ☞ page 216
Pr.10 DC injection brake operation frequency ☞ page 535
Pr.14 Load pattern selection ☞ page 530
Pr.178 to Pr.189 (Input terminal function selection) ☞ page 355

5.5.3 Remote setting function

Even if the operation panel is located away from the enclosure, contact signals can be used to perform continuous variable-speed operation, without using analog signals.

Pr.	Name	Initial value	Setting range	Description		
				RH, RM, RL signal function	Frequency setting storage	Deceleration to the main speed or lower
59 **F101**	**Remote function selection**	0	0	Multi-speed setting	—	Not available
			1	Remote setting	Enabled	
			2	Remote setting	Disabled	
			3	Remote setting	Disabled (Turning the STF/STR signal OFF clears remotely-set frequency.)	
			11	Remote setting	Enabled	Available
			12	Remote setting	Disabled	
			13	Remote setting	Disabled (Turning the STF/STR signal OFF clears remotely-set frequency.)	

◆ Remote setting function

- When **Pr.59** ≠ "0" (remote setting enabled), the functions of the signals are as shown in the following table.

Signal name	Function	Description
STF/STR	Forward/Reverse	The inverter accelerates the motor in the forward or reverse direction up to the main speed or to the frequency stored by the remote setting function.
RH	Acceleration	The set frequency increases according to the **Pr.44** setting.
RM	Deceleration	The set frequency decreases according to the **Pr.45** setting.
RL	Clear	The set frequency is cleared and the main speed is applied.
Terminal 2 (analog signal)	Main speed	The setting of the main speed is used as a base. The main speed is increased by the RH signal and decreased by the RM signal.

上正科技有限公司
購買、維修 您的需要選擇
電話： 037-466333
Email: service@repairtw.com
Line id: @zzzz
www.repairtw.com

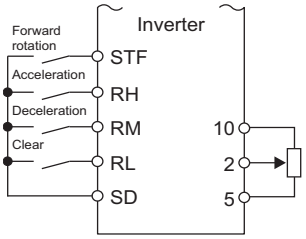

Connection diagram for remote setting

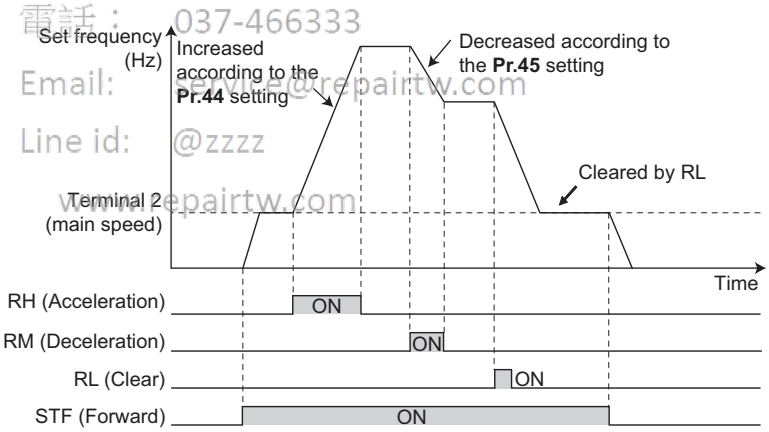

◆ Main speed

- The main speed used in the remote setting corresponds with each of the following operation modes.

Operation mode	Main speed
PU operation mode / NET operation mode	Digital setting
External operation mode / PU/External combined operation mode 2 (**Pr.79** = "4")	Analog input*1
PU/External combined operation mode 1 (**Pr.79** = "3")	Analog input via terminal 4 (AU signal ON)*1

*1 Set **Pr.28 Multi-speed input compensation selection** to "1" when enabling compensation for input via terminal 1.

◆ Acceleration/deceleration operation

- The running frequency changes as follows when the set frequency is changed by the remote setting function.

Frequency	Time setting	Description
Set frequency	**Pr.44**/**Pr.45**	The set frequency increases/decreases by remote setting according to the **Pr.44**/**Pr.45** setting.
Running frequency	**Pr.7**/**Pr.8**	The running frequency increases/decreases by the set frequency according to the **Pr.7**/**Pr.8** setting.

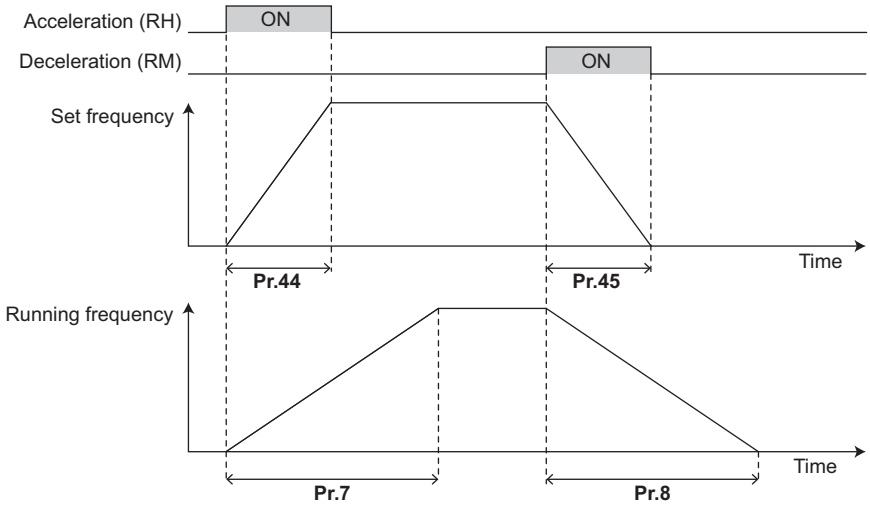

NOTE

- If the time setting of the running frequency is longer than the time setting of the set frequency, the motor accelerates/decelerates according to the time setting of the running frequency.

- Deceleration to the main speed or lower

  By setting **Pr.59** = "11 to 13", the speed can be decelerated to the frequency lower than the main speed (set by the External operation frequency (except multi-speed setting) or PU operation frequency).

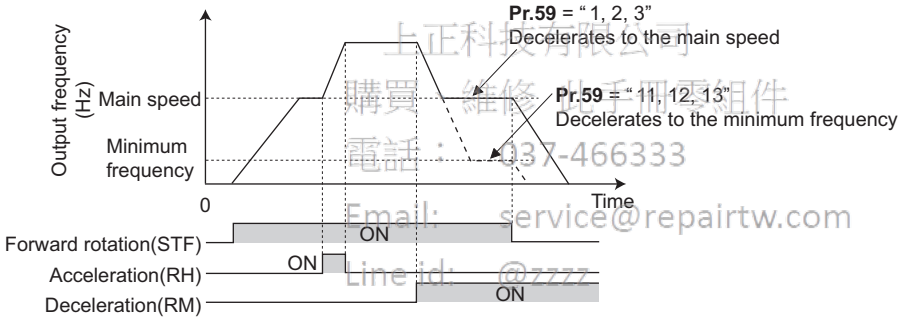

上正科技有限公司
購買、維修、技術諮詢組件
電話：037-466333
Email: service@repairtw.com
Line id: @zzzz
www.repairtw.com

- Regardless of whether the remote setting is enabled or disabled, the acceleration/deceleration time set for the running frequency can be changed to the second acceleration/deceleration time by turning ON the RT signal.
- The acceleration/deceleration time setting of the set frequency is fixed at the **Pr.44**/**Pr.45** setting.

◆ Frequency setting storage

- The remotely set frequency is stored, held, or cleared according to the **Pr.59** setting. When the inverter is turned ON again and the operation is resumed, the setting shown in the parentheses will be applied.

Pr.59 setting	Power OFF	STF/STR signal OFF
1, 11	Stored (stored frequency)	Held (stored frequency)
2, 12	Cleared (main speed)	Held (stored frequency)
3, 13	Cleared (main speed)	Cleared (main speed)

- Storage conditions

  The remotely-set frequency is stored at the point when the start signal (STF or STR) turns OFF. The remotely-set frequency is stored every minute after turning OFF (ON) the RH and RM signals together. Every minute, the frequency is overwritten in the EEPROM if the latest frequency is different from the previous one when comparing the two. This cannot be written using the RL signal.

NOTE

- When switching the start signal from ON to OFF, or changing frequency by the RH or RM signal frequently, set the frequency setting value storage function (write to EEPROM) invalid (**Pr.59** = "2, 3, 12, 13"). If the frequency setting value storage function is valid (**Pr.59** = "1, 11"), the frequency is written to EEPROM frequently, and this will shorten the life of the EEPROM.
- The range of frequency changeable using the acceleration (RH) signal and the deceleration (RM) signal is 0 to the maximum frequency (set in **Pr.1** or **Pr.18**). Note that the maximum value of set frequency is equal to the total of the main speed and the maximum frequency.

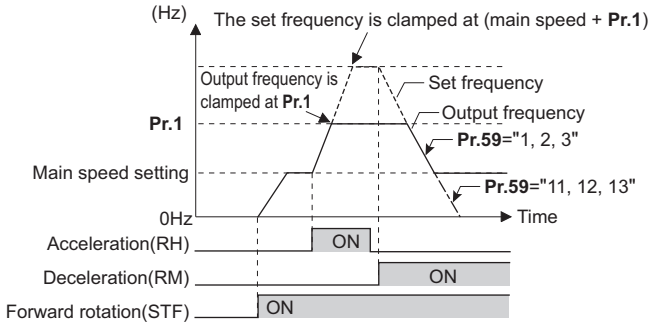

- Even if the start signal (STF or STR) is OFF, turning ON the RH or RM signal varies the preset frequency.
- The RH, RM, or RL signal can be assigned to an input terminal by setting **Pr.178 to Pr.189 (Input terminal function selection)**. Changing the terminal assignment may affect other functions. Set parameters after confirming the function of each terminal.
- The inverter can be used in the Network operation mode.
- The remote setting function is invalid during JOG operation and PID control operation.
- The multi-speed operation function is invalid when remote setting function is selected.

When setting frequency is "0"

上正科技有限公司
購買、維修、此手冊電線
電話： 037-466333
Email: service@repairtw.com
Line id: @zzzz
www.repairtw.com

- Even when the remotely-set frequency is cleared by turning ON the clear (RL) signal after turning OFF (ON) both the RH and RM signals, the inverter operates at the remotely-set frequency stored in the last operation if power is reapplied before one minute has elapsed since turning OFF (ON) both the RH and RM signals.

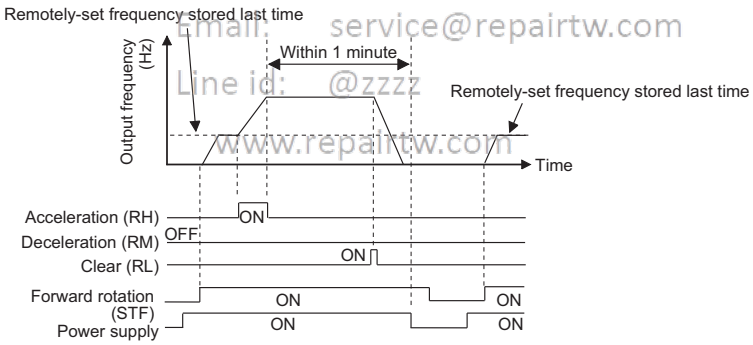

- When the remotely-set frequency is cleared by turning ON the clear (RL) signal after turning OFF (ON) both the RH and RM signals, the inverter operates at the frequency in the remotely-set frequency cleared state if power is reapplied before one minute has elapsed since turning OFF (ON) both the RH and RM signals.

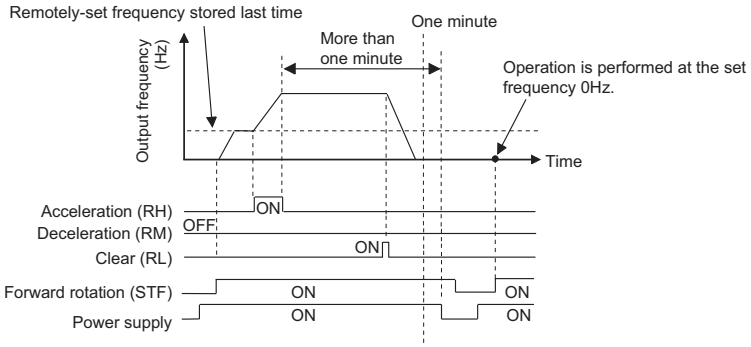

5

⚠ CAUTION

- When using the remote setting function, set the maximum frequency again according to the machine.

Parameters referred to

Pr.1 Maximum frequency, Pr.18 High speed maximum frequency ☞ page 271
Pr.7 Acceleration time, Pr.8 Deceleration time, Pr.44 Second acceleration/deceleration time, Pr.45 Second deceleration time ☞ page 216
Pr.28 Multi-speed input compensation selection ☞ page 249
Pr.178 to Pr.189 (Input terminal function selection) ☞ page 355

5.5.4 Starting frequency and start-time hold function

V/F Magnetic flux

上正科技有限公司
購買 維修 此手冊零組件
電話： 037-466333
Email: service@repairtw.com
Line id: @2222
www.repairtw.com

It is possible to set the starting frequency and hold the set starting frequency for a certain period of time.
Set these functions when a starting torque is needed or the motor drive at start needs smoothing.

Pr.	Name	Initial value	Setting range	Description
13 **F102**	**Starting frequency**	0.5 Hz	0 to 60 Hz	Set the starting frequency at which the start signal is turned ON.
571 **F103**	**Holding time at a start**	9999	0 to 10 s	Set the holding time of the frequency set in **Pr.13**.
			9999	The holding function at start is disabled.

◆ Starting frequency setting (Pr.13)

- The frequency at start can be set in the range of 0 to 60 Hz.
- Set the starting frequency at which the start signal is turned ON.

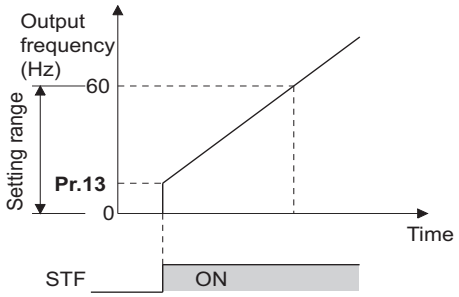

NOTE

- The inverter does not start if the frequency setting signal has a value lower than that of **Pr.13**.
  For example, while **Pr.13** = 5 Hz, the inverter output starts when the frequency setting signal reaches 5 Hz.

◆ Start-time hold function (Pr.571)

- This function holds during the period set in **Pr.571** and the output frequency set in **Pr.13 Starting frequency**.

- This function performs initial excitation to smooth the motor drive at a start.

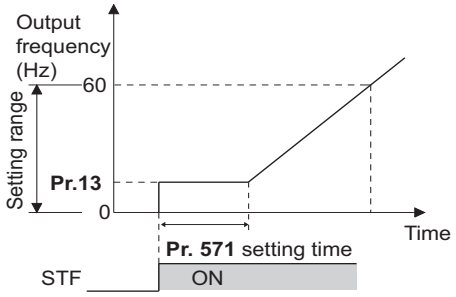

NOTE

- When **Pr.13** = 0 Hz, the starting frequency is held at 0.01 Hz.
- When the start signal was turned OFF during start-time hold, deceleration is started at that point.
- At switching between forward rotation and reverse rotation, the starting frequency is valid but the start-time hold function is disabled.

⚠CAUTION

- Note that when **Pr.13** is set to a value equal to or lower than the setting of **Pr.2 Minimum frequency**, simply turning ON the start signal runs the motor at the frequency set in **Pr.2** even if the command frequency is not given.

Parameters referred to

Pr.2 Minimum frequency ☞ page 271

5.5.5 Minimum motor speed frequency at the motor start up

上正科技有限公司
購買、維修 此手冊零組件
電話： 037-466333
Email: service@repairtw.com
Line Id: @222
www.repairtw.com

PM

Set the frequency where the PM motor starts running.

Set the deadband in the low-speed range to eliminate noise and offset deviation when setting a frequency with analog input.

Pr.	Name	Initial value	Setting range	Description
13 **F102**	**Starting frequency**	Minimum frequency / Minimum rotations per minute	0 to 60 Hz	Set the frequency where the motor starts running.

◆ Starting frequency setting (Pr.13)

- The frequency where the IPM motor starts running can be set in the range of 0 to 60 Hz.
- When the frequency command specifies the frequency less than the one set in **Pr.13 Starting frequency**, the PM motor is stopped.
  When the frequency command specifies the frequency equal to the set frequency or higher, the PM motor accelerates according to the setting of **Pr.7 Acceleration time**.

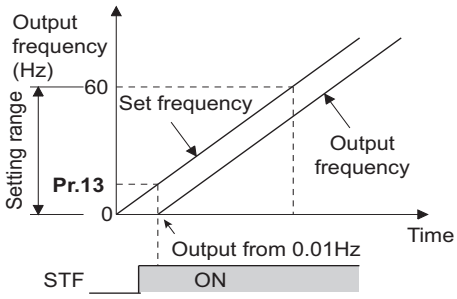

NOTE

- Under induction motor control (under V/F control or Advanced magnetic flux vector control), the output starts at the frequency set in **Pr.13**. Under PM motor control, the output always starts at 0.01 Hz.
- The inverter does not start if the frequency setting signal has a value lower than that of **Pr.13**. For example, while **Pr.13** = 20 Hz, the inverter output starts when the frequency setting signal reaches 20 Hz.

⚠CAUTION

- Note that when **Pr.13** is set to a value equal to or lower than **Pr.2 Minimum frequency**, simply turning ON the start signal runs the motor at the frequency set in **Pr.2** even if the command frequency is not given.

Parameters referred to

Pr.2 Minimum frequency ☞ page 271
Pr.7 Acceleration time ☞ page 216

5

上正科技有限公司
購買、維修 此手冊零組件
電話： 037-466333
Email: service@repairtw.com
Line id: @zzzz
www.repairtw.com

5.6 (D) Operation command and frequency command

Purpose	Parameter to set			Refer to page
To select the operation mode	Operation mode selection	P.D000	Pr.79	228
To start up the inverter in Network operation mode at power-ON	Communication startup mode selection	P.D000, P.D001	Pr.79, Pr.340	237
To select the command source during communication operation	Operation and speed command sources during communication operation, command source selection	P.D010 to P.D013	Pr.338, Pr.339, Pr.550, Pr.551	239
To prevent the motor from rotating reversely	Reverse rotation prevention selection	P.D020	Pr.78	245
To set the frequency using pulse train input	Pulse train input	P.D100, P.D101, P.D110, P.D111	Pr.291, Pr.384 to Pr.386	245
To perform JOG (inching) operation	JOG operation	P.D200, P.F002	Pr.15, Pr.16	248
To control the frequency with combinations of terminals	Multi-speed operation	P.D300 to P.D315	Pr.28, Pr.4 to Pr.6, Pr.24 to Pr.27, Pr.232 to Pr.239	249

5.6.1 Operation mode selection

Select the operation mode of the inverter.

The mode can be changed among operations using external signals (External operation), operation by the operation panel or the parameter unit (PU operation), combined operation of PU operation and External operation (External/PU combined operation), and Network operation (when RS-485 terminals or a communication option is used).

上正科技有限公司
購買、維修 此手冊零組件
電話: 03-3286383
Email: service@repairtw.com
Line Id: @2222
www.repairtw.com

Pr.	Name	Initial value	Setting range	Description
79 D000	Operation mode selection	0	0 to 4, 6, 7	Selects the operation mode.

The following table lists valid and invalid commands in each operation mode.

Pr.79 setting	Description			LED indicator : OFF : ON	Refer to page
0 (initial value)	PU/EXT key selection of the operation mode. The inverter operation mode can be selected by pressing [PU/EXT]. At power ON, the inverter is in the External operation mode.			PU operation mode PU EXT NET External operation mode PU EXT NET NET operation mode PU EXT NET	232
	Operation mode	**Frequency command**	**Start command**		
1	Fixed at PU operation mode.	Sent from the operation panel or parameter unit.	Sent by pressing [FWD] or [REV] on operation panel or parameter unit.	PU operation mode PU EXT NET	233
2	Fixed at External operation mode. However, the inverter operation mode can also be changed to the Network operation mode.	Sent using external signals (input via terminal 2 or 4, using the JOG signal, using the multi-speed setting function, etc.).	Sent using external signals (via terminal STF or STR).	External operation mode PU EXT NET NET operation mode PU EXT NET	232
3	External/PU combined operation mode 1	Sent from the operation panel or parameter unit or sent using external signals (input using the multi-speed setting function or via terminal 4).*1	Sent using external signals (via terminal STF or STR).	External/PU combined operation mode PU EXT NET	233
4	External/PU combined operation mode 2	Sent using external signals (input via terminal 2 or 4, using the JOG signal, using the multi-speed setting function, etc.).	Sent by pressing [FWD] or [REV] on operation panel or parameter unit.		234
6	Operation mode switchover during operation. Switching from among the PU, External, and NET operation modes can be performed during operation.			PU operation mode PU EXT NET External operation mode PU EXT NET NET operation mode PU EXT NET	234
7	External operation mode (PU operation interlock). X12 signal ON: Switchover to PU operation mode enabled (signal is OFF during External operation). X12 signal OFF: Switchover to PU operation mode disabled.				234

*1 The following is the frequency commands listed in descending order of priority when "3" is set in **Pr.79**: Multi-speed setting function (RL/RM/RH/REX signal) > PID control (X14 signal) > terminal 4 analog input (AU signal) > digital input from the operation panel.

上正科技有限公司
購買、維修 此手冊零組件
電話： 037-466333
Email: service@repairtw.com
Line id: @ccc
www.repairtw.com

◆ Operation mode basics

- The operation mode specifies the source of the start command and the frequency command for the inverter.

- Basic operation modes are as follows.

External operation mode: For giving a start command and a frequency command with an external potentiometer or switches which are connected to the control circuit terminal.

PU operation mode : For giving a start command and a frequency command from the operation panel, parameter unit, or through RS-485 communication via the PU connector.

Network operation mode (NET operation mode) : For giving a start command and a frequency command via the RS-485 terminals or communication option.

- The operation mode can be selected from the operation panel or with the communication instruction code.

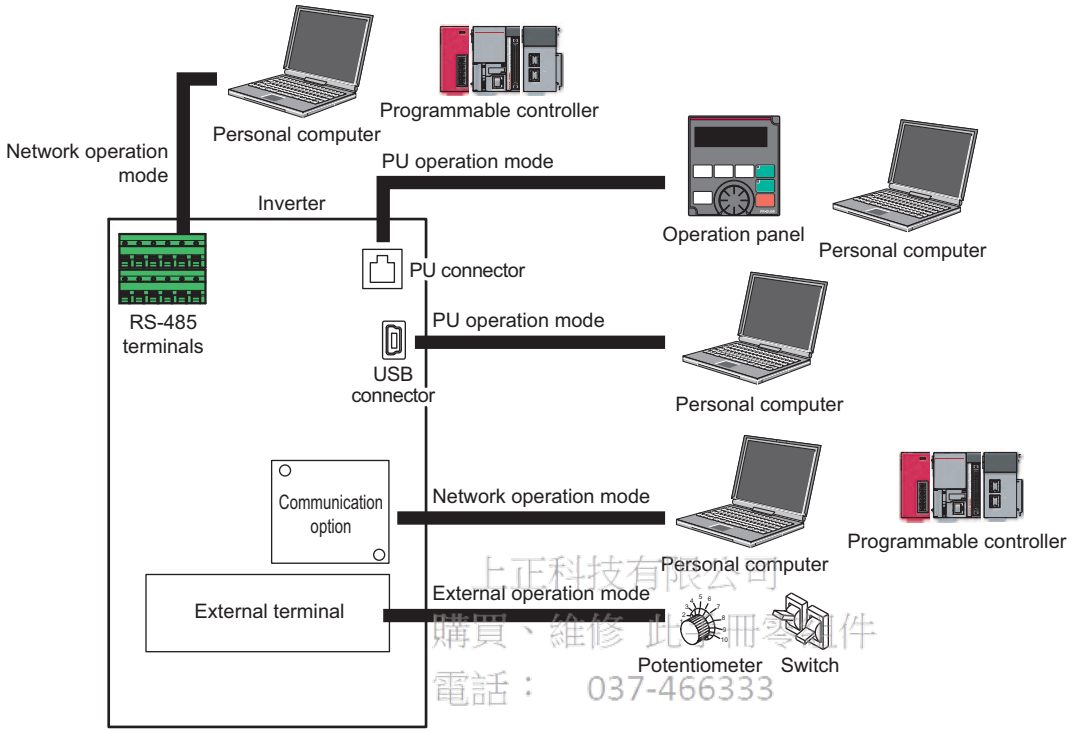

上正科技有限公司
購買、維修 此冊零件
電話： 037-466333
Email: service@repairtw.com
Line id: @mzz
www.repairtw.com

NOTE

- There is a choice of two settings, "3" and "4", for the External/PU combined operation mode. The startup method differs according to the setting value.
- In the initial setting, the PU Stop selection (function to stop the inverter operation by pressing STOP RESET on the operation panel or the parameter unit) is enabled even in the operation mode other than the PU operation mode. (Refer to **Pr.75** on page 188.)

◆ Operation mode switching method

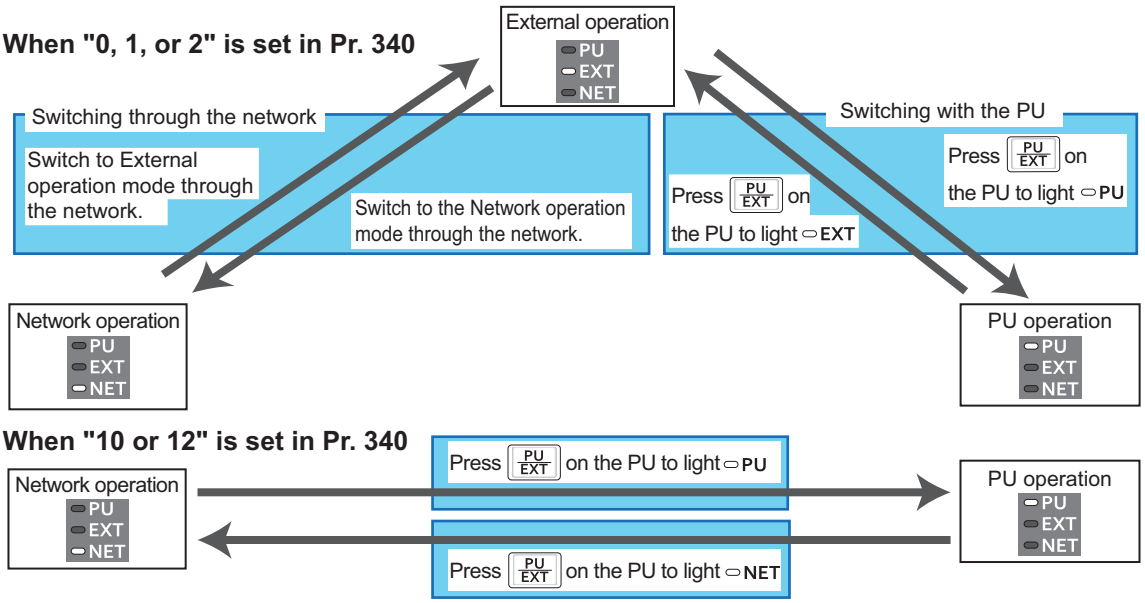

NOTE

- For details on switching by external terminals, refer to the following pages.

  PU operation external interlock (X12 signal) ☞ page 234

  PU/External operation switchover (X16 signal) ☞ page 235

  PU/NET operation switchover (X65 signal), External/NET operation switchover (X66 signal) ☞ page 236

  Pr.340 Communication startup mode selection ☞ page 237

上達科技有限公司
購買、維修 此手冊零組件
電話： 037-466333
Email: service@repairtw.com
Line id: @zzzz
www.repairtw.com

◆ Operation mode selection flow

Referring to the following table, select the basic parameter settings or terminal wiring related to the operation mode.

Method to give start command	Method to give frequency setting command	Input interface	Parameter setting	Operation method
Using external signals (via terminal STF/STR)	Using external signals (input via terminal 2/4, using the JOG signal, using the multi-speed setting function, etc.)	Terminals STF (forward rotation)/STR (reverse rotation) (refer to page 359), 2/4 (analog), RL, RM, RH, JOG, etc.	**Pr.79** = "2" (Fixed at External operation mode)	• Frequency setting: Turn ON a terminal used for frequency setting. • Start command: Turn ON terminal STF/STR.
	From PU (digital setting)	Terminal STF (forward rotation)/STR (reverse rotation) (refer to page 359)	**Pr.79** = "3" (External/PU combined operation mode 1)	• Frequency setting: Use the DU (digital setting). • Start command: Turn ON terminal STF/STR.
	Through communication (via RS-485 terminals)	Terminal STF (forward rotation)/STR (reverse rotation) (refer to page 359), RS-485 terminals (refer to page 475)	**Pr.338** = "1" **Pr.340** = "1 or 2"	• Frequency setting: Transmit a frequency command through communication. • Start command: Turn ON terminal STF/STR.
	Through communication (via communication option)	Terminals on communication option (refer to the Instruction Manual of the option)	**Pr.338** = "1" **Pr.340** = "1"	• Frequency setting: Transmit a frequency command through communication. • Start command: Turn ON terminal STF/STR.
From PU (using FWD/REV key)	Using external signals (input via terminal 2/4, using the JOG signal, using the multi-speed setting function, etc.)	Terminals 2/4 (analog), RL, RM, RH, JOG, etc.	**Pr.79** = "4" (External/PU combined operation mode 2)	• Frequency setting: Turn ON a terminal used for frequency setting. • Start command: Press the FWD/REV key.
	From PU (digital setting)	–	**Pr.79** = "1" (Fixed at PU operation mode)	• Frequency setting: Use the PU (digital setting). • Start command: Press the FWD/REV key.
	Through communication (via RS-485 terminals / communication option)	Not available.		
Through communication (via RS-485 terminals)	Using external signals (input via terminal 2/4, using the JOG signal, using the multi-speed setting function, etc.)	RS-485 terminals (refer to page 475), terminals 2/4 (analog), RL, RM, RH, JOG, etc.	**Pr.339** = "1" **Pr.340** = "1 or 2"	• Frequency setting: Turn ON a terminal used for frequency setting. • Start command: Transmit a start command through communication.
	From PU (digital setting)	Not available.		
	Through communication (via RS-485 terminals)	RS-485 terminals (refer to page 475)	**Pr.340** = "1 or 2"	• Frequency setting: Transmit a frequency command through communication. • Start command: Transmit a start command through communication.
Through communication (via communication option)	Using external signals (input via terminal 2/4, using the JOG signal, using the multi-speed setting function, etc.)	Terminals on communication option (refer to the Instruction Manual of the option), terminals 2/4 (analog), RL, RM, RH, JOG, etc.	**Pr.339** = "1" **Pr.340** = "1"	• Frequency setting: Turn ON a terminal used for frequency setting. • Start command: Transmit a start command through communication.
	From PU (digital setting)	Not available.		
	Through communication (via communication option)	Terminals on communication option (refer to the Instruction Manual of the option)	**Pr.340** = "1"	• Frequency setting: Transmit a frequency command through communication. • Start command: Transmit a start command through communication.

上正科技有限公司
購買、維修 此手冊電子檔
電話： 037-466333
Email: service@repairtw.com
Line id: @377
www.repairtw.com

◆ External operation mode (Pr.79 = "0 (initial value) or 2")

- Select the External operation mode when the start command and the frequency command are applied from a frequency setting potentiometer, start switch, etc. which are provided externally and connected to the control circuit terminals of the inverter.

- Generally, parameter change cannot be performed in the External operation mode. (Some parameters can be changed. Refer to **Pr.77** on page 196.)
- When **Pr.79** = "0 or 2", the inverter starts up in the External operation mode at power-ON. (When using the Network operation mode, refer to page 237.)
- When parameter changing is seldom necessary, setting "2" fixes the operation mode to the External operation mode.
  When frequent parameter changing is necessary, setting "0 (initial value)" allows the operation mode to be changed easily to the PU operation mode by pressing [PU EXT] on the operation panel. After switching to the PU operation mode, always return to the External operation mode.
- The STF or STR signal is used as a start command. The input voltage or current via terminal 2 or 4, multi-speed setting signal, or JOG signal is used as a frequency command.

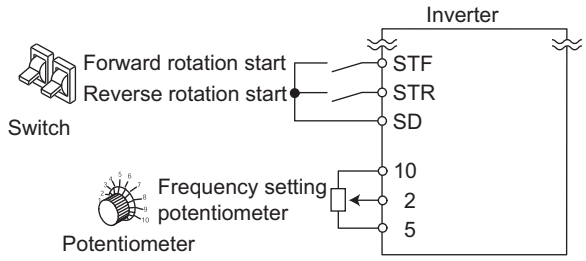

◆ PU operation mode (Pr.79 = "1")

- Select the PU operation mode when giving start and frequency commands by only the key operation of the operation panel or the parameter unit.
  Also select the PU operation mode when giving commands through communication via the PU connector.
- When **Pr.79** ="1", the inverter starts up in the PU operation mode at power-ON. The mode cannot be changed to other operation modes.
- The frequency can also be set by simply turning the setting dial on the operation panel like a volume knob. (Refer to **Pr.161 Frequency setting/key lock operation selection** on page 192.)
- When the PU operation mode is selected, the PU operation mode (PU) signal can be output.
  For the terminal used for the PU signal, set "10 (positive logic)" or "110 (negative logic)" in any of **Pr.190 to Pr.196 (Output terminal function selection)** to assign the function.

上止科技有限公司
購買、維修 此手冊零組件
電話： 037-466333
Email: service@repairtw.com
Line id: @zzzz
www.repairtw.com

Operation panel (FR-DU08)

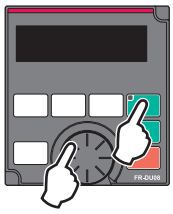

◆ PU/External combined operation mode 1 (Pr.79 = "3")

- Select the PU/External combined operation mode 1 when giving a frequency command from the operation panel or the parameter unit and giving a start command with the external start switches.
- Set "3" in **Pr.79** . The mode cannot be changed to other operation modes.
- When the frequency commands are given using the multi-speed setting signals (external signals), they have a higher priority than the frequency commands given from the PU. When the AU signal is ON, inputting the command signals via terminal 4 is enabled.

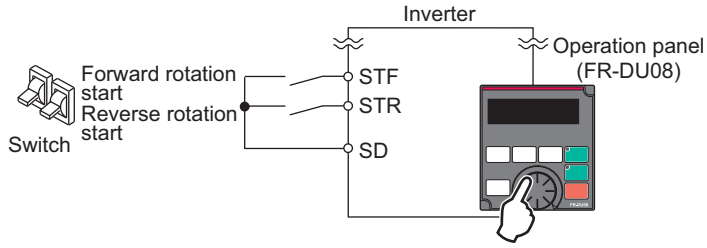

◆ PU/External combined operation mode 2 (Pr.79 = "4")

- Select the PU/External combined operation mode 2 when giving a frequency command from the external potentiometer, or using the multi-speed setting signals or the JOG signal, and giving a start command by key operation of the operation panel or the parameter unit.
- Set "4" in **Pr.79**. The mode cannot be changed to other operation modes.

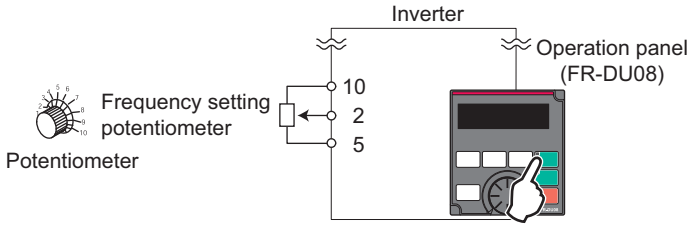

◆ Operation mode switchover during operation (Pr.79 = "6")

- During operation, the inverter operation mode can be switched from among the PU, External, and Network (Network operation mode is selectable when RS-485 terminals or communication option is used).

Operation mode switchover	Operation/operating status
External operation→PU operation	Use the operation panel or parameter unit to change to the PU operation mode. • The direction of motor rotation does not change due to the operation mode change from the External operation mode. • The previous setting of frequency which has been set using a potentiometer (frequency command) is taken over. (However, note that the setting disappears when the power is turned OFF or when the inverter is reset.)
External operation→NET operation	Give the command through communication to change the operation mode to the Network operation mode. • The direction of motor rotation does not change due to the operation mode change from the External operation mode. • The previous setting of frequency which has been set using a potentiometer (frequency command) is taken over. (However, note that the setting disappears when the power is turned OFF or when the inverter is reset.)
PU operation→External operation	Press the key on the operation panel or parameter unit to change the operation mode to the External operation mode. • The direction of operation is determined by external input signals used in the External operation mode. • The setting frequency is determined by the external frequency command signal.
PU operation→NET operation	Give the command through communication to change the operation mode to the Network operation mode. • The direction of motor rotation and the frequency setting does not change due to the operation mode change from the PU operation mode.
NET operation→External operation	Give the command through communication to change the operation mode to the External operation mode. • The direction of operation is determined by external input signals used in the External operation mode. • The setting frequency is determined by the external frequency command signal.
NET operation→PU operation	Use the operation panel or parameter unit to change to the PU operation mode. • The direction of motor rotation and the frequency setting does not change due to the operation mode change from the Network operation mode.

上正科技有限公司
電話： 037-466333
Email: service@repairtw.com
www.repairtw.com

◆ PU operation interlock (Pr.79 = "7")

- The operation mode can be forcibly switched to the External operation mode by turning OFF the PU operation external interlock (X12) signal. This function will be usable in a case where the inverter does not reply to external command signals during operation due to the operation mode accidentally unswitched from the PU operation mode to the External operation mode.
- To input the X12 signal, set "12" in any of **Pr.178 to Pr.189 (Input terminal function selection)** to assign the function. (For details on **Pr.178 to Pr.189**, refer to page 355.)
- Set **Pr.79** = "7" (PU operation interlock).

- If the X12 signal is not assigned, the function of the MRS signal is switched to the PU operation interlock signal from MRS (output stop).

X12 (MRS) signal	Function/Operation	
	Operation mode	Parameter writing*1
ON	Switching of the operation mode (External, PU, and NET) is enabled. The signal is OFF during External operation.	Enabled.
OFF	Operation mode is forcefully changed to the External operation mode. External operation is enabled. Switching to the PU or NET operation mode from the External operation mode is disabled.	Disabled except for **Pr.79**.

*1 Depends on the **Pr.77 Parameter write selection** setting and other parameter write conditions. (Refer to page 196.)

- Functions/operations by X12 (MRS) signal ON/OFF

Operating status		X12 (MRS) signal	Operation mode	Operating status	Switching to PU or NET operation mode
Operation mode	Status				
PU/NET	During stop	ON→OFF*1	External*2	If frequency and start commands are given from external source, the inverter runs by those commands.	Disabled
	During running	ON→OFF*1			Disabled
External	During stop	OFF→ON	External*2	During stop	Enabled
		ON→OFF			Disabled
	During running	OFF→ON		Running→Output stop	Disabled
		ON→OFF		Output stop→Running	Disabled

*1 The mode is switched to the External operation mode regardless of the ON/OFF state of the start signal (STF/STR). Thus, the motor runs under the External operation mode when the X12 (MRS) signal turns OFF while the STF or STR signal is ON.

*2 When a fault occurs, the inverter can be reset by pressing STOP RESET on the operation panel.

上亞科技有限公司
購買、維修 此手冊零組件
電話： 037-466333
Email: service@repairtw.com
Line id: @zzzz
www.repairtw.com

NOTE

- The operation mode cannot be switched to the PU operation mode with the start signal (STF/STR) ON state even if the X12 (MRS) signal turns ON.
- If the MRS signal is ON and **Pr.79** is written to a value other than "7" when the MRS signal is used as the PU interlock signal, the MRS signal will act as a regular MRS function (output stop). Also, when **Pr.79** = "7", the MRS signal becomes the PU interlock signal.
- The logic of the signal follows the setting of **Pr.17 MRS input selection** also when the MRS signal is used as the PU operation interlock signal. When **Pr.17** = "2", ON and OFF in the above explanation are reversed.
- Changing the terminal assignment using **Pr.178 to Pr.189 (Input terminal function selection)** may affect the other functions. Set parameters after confirming the function of each terminal.

◆ Switching operation mode by external signal (X16 signal)

- When External operation and the operation from the operation panel are used together, the PU operation mode and External operation mode can be switched during a stop (during motor stop, start command OFF) by using the PU/External operation switchover (X16) signal.
- When **Pr.79** = "0, 6, or 7", switching between the PU operation mode and External operation mode is possible. (When **Pr.79** ="6", switchover is enabled during operation.)

- To input the X16 signal, set "16" in any of **Pr.178 to Pr.189 (Input terminal function selection)** to assign the function to a terminal.

Pr.79 setting		X16 signal status and operation mode		Remarks
		ON (External)	OFF (PU)	
0 (initial value)		External operation mode	PU operation mode	Switching among the External, PU, and NET operation modes is enabled.
1		PU operation mode		Fixed at PU operation mode.
2		External operation mode		Fixed at External operation mode (Switching to NET operation mode enabled).
3, 4		External/PU combined operation mode		Fixed at External/PU combined operation mode.
6		External operation mode	PU operation mode	Switching among the External, PU, and NET operation mode is enabled during operation.
7	X12 (MRS) signal ON	External operation mode	PU operation mode	Switching among the External, PU, and NET operation mode is enabled (signal is OFF in the External operation mode).
	X12 (MRS) signal OFF	External operation mode		Fixed at External operation mode (forcibly switched to External operation mode).

NOTE

- The operation mode is determined by the setting of **Pr.340 Communication startup mode selection** and the ON/OFF state of the X65 and X66 signals. (For the details, refer to page 236.)
- The priority of **Pr.79** and **Pr.340** and signals is **Pr.79** > X12 > X66 > X65 > X16 > **Pr.340**.
- Changing the terminal assignment using **Pr.178 to Pr.189 (Input terminal function selection)** may affect the other functions. Set parameters after confirming the function of each terminal.

◆ Switching the operation mode by external signals (X65, X66 signals)

- When **Pr.79** = "0, 2 or 6", the PU operation mode and External operation modes can be changed to the Network operation mode during a stop (during motor stop, start command OFF) by the PU/NET operation switchover (X65) signal, or the External/NET operation switchover (X66) signal. (When **Pr.79** = "6", switchover is enabled during operation.)
- To switch between the Network operation mode and the PU operation mode

上正科技有限公司
購買、維修、此手冊零組件
電話： 037-466333
Email: service@repairtw.com
Line id: @zzzz
www.repairtw.com

1. Set **Pr.79** = "0 (initial value) or 6".

2. Set **Pr.340 Communication startup mode selection** = "10 or 12".

3. Set "65" in any of **Pr.178 to Pr.189** to assign the PU/NET operation switchover (X65) signal to a terminal.

4. When the X65 signal is ON, the PU operation mode is selected. When the X65 signal is OFF, the NET operation mode is selected.

Pr.340 setting	Pr.79 setting		X65 signal state		Remarks
			ON (PU)	OFF (NET)	
10, 12	0 (initial value)		PU operation mode*1	NET operation mode*2	—
	1		PU operation mode		Fixed at PU operation mode.
	2		NET operation mode		Fixed at NET operation mode.
	3, 4		External/PU combined operation mode		Fixed at External/PU combined operation mode.
	6		PU operation mode*1	NET operation mode*2	The operation mode can be changed during operation.
	7	X12 (MRS) signal ON	Switching between the External operation mode and PU operation mode is enabled.*2		The signal is OFF during operation in the External operation mode.
		X12 (MRS) signal OFF	External operation mode		The operation mode is forcibly switched to the External operation mode.

*1 When the X66 signal is ON, the NET operation mode is selected.
*2 When the X16 signal is OFF, the PU operation mode is selected. Also, when "0" is set for **Pr.550 NET mode operation command source selection** and the communication option is not connected (communication option is the command source), the PU operation mode is selected. When the X16 signal is ON, the External operation mode is selected.

- To switch between the Network operation mode and the External operation mode

1. Set **Pr.79** = "0 (initial value), 2, 6, or 7". (When **Pr.79** = "7" and the X12 (MRS) signal is ON, the operation mode can be switched.)

2. Set **Pr.340 Communication startup mode selection** = "0" (initial value), "1" or "2".

3. Set "66" in one of **Pr.178 to Pr.189** to assign the NET-External operation switching signal (X66) to a terminal.

4. When the X66 signal is ON, the NET operation mode is selected. When the X66 signal is OFF, the External operation mode is selected.

Pr.340 setting	Pr.79 setting		X66 signal state		Remarks
			ON (NET)	OFF (External)	
0 (initial value), 1, 2	0 (initial value)		NET operation mode*1	External operation mode*2	—
	1		PU operation mode		Fixed at PU operation mode.
	2		NET operation mode*1	External operation mode	Switching to PU operation mode is disabled.
	3, 4		External/PU combined operation mode		Fixed at External/PU combined operation mode.
	6		NET operation mode*1	External operation mode*2	The operation mode can be changed during operation.
	7	X12 (MRS) signal ON	NET operation mode*1	External operation mode*2	The signal is OFF during operation in the External operation mode.
		X12 (MRS) signal OFF	External operation mode		The operation mode is forcibly switched to the External operation mode.

*1 When **Pr.550 NET mode operation command source selection** = "0" (communication option control source) and no communication option is connected, the External operation mode is selected.

*2 When the X16 signal is OFF, the PU operation mode is selected. Also, when the X65 signal is assigned, the operation mode follows the ON/OFF state of the X65 signal.

NOTE

- The priority of **Pr.79** and **Pr.340** and signals is as follows: **Pr.79** > X12 > X66 > X65 > X16 > **Pr.340**.
- Changing the terminal assignment using **Pr.178 to Pr.189 (Input terminal function selection)** may affect the other functions. Set parameters after confirming the function of each terminal.

上正科技有限公司
購買、維修 此手冊零組件
電話：0934 456333
Email: service@repairtw.com
Line ID: @zzzz
www.repairtw.com

Parameters referred to

Pr.15 Jog frequency ☞ page 248
Pr.4 to Pr.6, Pr.24 to 27, Pr.232 to Pr.239 multi-speed operation ☞ page 249
Pr.75 Reset selection/disconnected PU detection/PU stop selection ☞ page 188
Pr.161 Frequency setting/key lock operation selection ☞ page 192
Pr.178 to Pr.189 (Input terminal function selection) ☞ page 355
Pr.190 to Pr.196 (Output terminal function selection) ☞ page 312
Pr.340 Communication startup mode selection ☞ page 237
Pr.550 NET mode operation command source selection ☞ page 239

5.6.2 Startup of the inverter in Network operation mode at power-ON

When power is switched ON or when power comes back ON after an instantaneous power failure, the inverter can be started up in the Network operation mode.

After the inverter starts up in the Network operation mode, parameter writing and operation can be commanded from programs. Set this mode when performing communication operation using the RS-485 terminals or a communication option.

Pr.	Name	Initial value	Setting range	Description
79 **D000**	**Operation mode selection**	0	0 to 4, 6, 7	Selects the operation mode. (Refer to page 228.)
340 **D001**	**Communication startup mode selection**	0	0	The inverter starts up in an operation mode selected in **Pr.79**.
			1, 2	The inverter starts up in the Network operation mode. If an instantaneous power failure occurs when "2" is set, the operating status before the instantaneous power failure is maintained.
			10, 12	The inverter starts up in the Network operation mode. The operation mode can be changed between the PU operation mode and Network operation mode from the operation panel. If an instantaneous power failure occurs when "12" is set, running is continued at the condition before the instantaneous power failure.

◆ Selecting the operation mode for power-ON (Pr.340)

- Depending on the **Pr.79** and **Pr.340** settings, the operation mode at power-ON (reset) changes as described below.

Pr.340 setting	Pr.79 setting	Operation mode at power-ON, at power restoration, or after a reset	Operation mode switching
0 (initial value)	0 (initial value)	External operation mode	Switching among the External, PU, and NET operation modes is enabled.*2
	1	PU operation mode	Fixed at PU operation mode.
	2	External operation mode	Switching between the External and NET operation modes is enabled. Switching to PU operation mode is disabled.
	3, 4	External/PU combined operation mode	Operation mode switching is disabled.
	6	External operation mode	Switching among the External, PU, and NET operation mode is enabled while running.
	7	X12 (MRS) signal ON: External operation mode	Switching among the External, PU, and NET operation modes is enabled.*2
		X12 (MRS) signal OFF: External operation mode	Fixed at External operation mode (forcibly switched to External operation mode).
1, 2*1	0	NET operation mode	Same as **Pr.340** = "0".
	1	PU operation mode	
	2	NET operation mode	
	3, 4	External/PU combined operation mode	
	6	NET operation mode	
	7	X12 (MRS) signal ON: NET operation mode	
		X12 (MRS) signal OFF: External operation mode	
10, 12*1	0	NET operation mode	Switching between the PU and NET operation mode is enabled.*3
	1	PU operation mode	Same as **Pr.340** = "0".
	2	NET operation mode	Fixed at NET operation mode.
	3, 4	External/PU combined operation mode	Same as **Pr.340** = "0".
	6	NET operation mode	Switching between the PU and NET operation mode is enabled during operation.*3
	7	External operation mode	Same as **Pr.340** = "0".

*1 Use **Pr.340** = "2 or 12" setting to perform communication with the RS-485 terminals. Even if an instantaneous power failure occurs while **Pr.57 Restart coasting time** ≠ "9999", the inverter continues running at the condition before the instantaneous failure. When **Pr.340** = "1 or 10", if a power failure occurs while the start signal is being input through communication, the start signal is OFF at power restoration.

*2 The operation mode cannot be directly changed between the PU operation mode and Network operation mode.

*3 Switching between the PU and NET operation modes is available with the PU/EXT key on the operation panel and the X65 signal.

上正科技有限公司
購買、維修、昇級程式軟件
電話： 037-466333
email: service@repairtw.com
Line id: @222
www.repairtw.com

Parameters referred to

Pr.57 Restart coasting time ☞ page 446, page 451
Pr.79 Operation mode selection ☞ page 228

5.6.3 Start command source and frequency command source during communication operation

The start and frequency commands given from an external device can be made valid when using the RS-485 terminals or the communication option. The command source in the PU operation mode can also be selected.

Pr.	Name	Initial value	Setting range	Description
338 D010	**Communication operation command source**	0	0	Start command source is communication.
			1	Start command source is external.
339 D011	**Communication speed command source**	0	0	Frequency command source is communication.
			1	Frequency command source is external.
			2	Frequency command source is external. (When there is no external input, the frequency command given via communication is valid, and the frequency command given via terminal 2 is invalid.)
550 D012	**NET mode operation command source selection**	9999	0	The communication option is the command source when in the NET operation mode.
			1	The RS-485 terminals are the command source when in the NET operation mode.
			9999	Communication option is recognized automatically. Normally, the RS-485 terminals are the command source. When the communication option is mounted, the communication option is the command source.
551 D013	**PU mode operation command source selection**	9999	1	The RS-485 terminals are the command source when in the PU operation mode.
			2	The PU connector is the command source when in the PU operation mode.
			3	The USB connector is the command source when in the PU operation mode.
			9999	USB automatic recognition Normally, the PU connector is the command source. When the USB is connected, the USB connector is the command source.

上正科技有限公司
購買、維修 此上帝會計
電話： 037-466333
Email: service@repairtw.com
Line id: @zzzz
www.repairtw.com

◆ Selection of command source in the network (NET) operation mode (Pr.550)

- Either of the RS-485 terminals or the communication option can be specified for the command source in the Network operation mode.
- For example, whether or not the communication option is installed, set **Pr.550** = "1" to write parameters or give the start and frequency commands via RS-485 terminals in the Network operation mode.

NOTE

- In the initial setting, "9999" (communication option automatic recognition) is set for **Pr.550**. Thus, if the communication option is mounted, parameters cannot be written or the start and frequency commands cannot be sent by communications that use the RS-485 terminals. (Monitoring or parameter reading can be performed.)

◆ Selection of the command source of the PU operation mode (Pr.551)

- Any of the PU connector, RS-485 terminals, or USB connector can be specified as the command source in the PU operation mode.
- To write parameters or execute the start and frequency commands through communication in the PU operation mode, set **Pr.551** = "1" for communication via the RS-485 terminals, or set **Pr.551** = "3" or "9999" for communication via the USB connector.

NOTE

- When **Pr.550** = "1" (NET mode RS-485 terminals) and **Pr.551** ="1" (PU mode RS-485 terminals), the PU operation mode has a precedence. For this reason, if the communication option is not mounted, switching to the Network operation mode is no longer possible.
- Changed setting values are enabled at power-ON or inverter reset.

Pr.550 setting	Pr.551 setting	Command source				Remarks
		PU connector	USB connector	RS-485 terminals	Communication option	
0	1	×	×	PU operation mode *1	NET operation mode *2	
	2	PU operation mode	×	×	NET operation mode *2	
	3	×	PU operation mode	×	NET operation mode *2	
	9999 (initial value)	PU operation mode *3	PU operation mode *3	×	NET operation mode *2	
1	1	×	×	PU operation mode *1	×	Switching to NET operation mode disabled
	2	PU operation mode	×	NET operation mode	×	
	3	×	PU operation mode	NET operation mode	×	
	9999 (initial value)	PU operation mode *3	PU operation mode *3	NET operation mode	×	
9999 (initial value)	1	×	×	PU operation mode *1	NET operation mode *2	
	2	PU operation mode	×	×	NET operation mode *2	With communication option
				NET operation mode	×	Without communication option
	3	×	PU operation mode	×	NET operation mode *2	With communication option
				NET operation mode	×	Without communication option
	9999 (initial value)	PU operation mode *3	PU operation mode *3	×	NET operation mode *2	With communication option
				NET operation mode	×	Without communication option

上正科技有限公司
購買、維修 此手冊零組件
電話：037-466333
Email: service@repairtw.com
Line id: @zzzz
www.repairtw.com

*1 The MODBUS RTU protocol cannot be used in the PU operation mode. To use the MODBUS RTU protocol, set **Pr.551** = "2".
*2 If the communication option is not mounted, switching to the NET operation mode is not possible.
*3 When **Pr.551** = "9999", the priority of the PU command source is USB connector > PU connector.

◆ Controllability through communication

Command interface	Conditions (Pr.551 setting)	Item	Controllability in each operation mode					
			PU operation	External operation	Combined operation mode 1 (Pr.79 = "3")	Combined operation mode 2 (Pr.79 = "4")	NET operation (via RS-485 terminals)[*7]	NET operation (via option)[*8]
PU connector[*1]	2 (PU connector), 9999 (automatic recognition, without USB connection)	Operation (start) command	○	×	×	○	×	
		Operation (stop) command	○	Δ[*4]	Δ[*4]	○	Δ[*4]	
		Running frequency	○	×	○	×	×	
		Monitor	○	○	○	○	○	
		Parameter writing	○[*5]	×[*6]	○[*5]	○[*5]	×[*6]	
		Parameter read	○	○	○	○	○	
		Inverter reset	○	○	○	○	○	
	Terminals other than the above	Operation (start) command	×	×	×	×	×	
		Operation (stop) command	Δ[*4]	Δ[*4]	Δ[*4]	Δ[*4]	Δ[*4]	
		Running frequency	×	×	×	×	×	
		Monitor	○	○	○	○	○	
		Parameter writing	×[*6]	×[*6]	×[*6]	×[*6]	×[*6]	
		Parameter read	○	○	○	○	○	
		Inverter reset	○	○	○	○	○	
RS-485 terminals	1 (RS-485 terminals)	Operation command (start, stop)	○	×	×	○	×	
		Running frequency	○	×	○	×	×	
		Monitor	○	○	○	○	○	
		Parameter writing	○[*5]	×[*6]	○[*5]	○[*5]	×[*6]	
		Parameter read	○	○	○	○	○	
		Inverter reset	○	○	○	○	○	
	Terminals other than the above	Operation command (start, stop)	×	×	×	×	○[*2]	×
		Running frequency	×	×	×	×	○[*2]	×
		Monitor	○	○	○	○	○	○
		Parameter writing	×[*6]	×[*6]	×[*6]	×[*6]	○[*5]	×[*6]
		Parameter read	○	○	○	○	○	○
		Inverter reset	×	×	×	×	○[*3]	×
USB connector	3 (USB connector), 9999 (automatic recognition, with USB connection)	Operation command (start, stop)	○	×	×	○	×	
		Running frequency	○	×	○	×	×	
		Monitor	○	○	○	○	○	
		Parameter writing	○[*5]	×[*6]	×[*6]	×[*6]	×[*6]	
		Parameter read	○	○	○	○	○	
		Inverter reset	○	○	○	○	○	
	Terminals other than the above	Operation command (start, stop)	×	×	×	×	×	
		Running frequency	×	×	×	×	×	
		Monitor	○	○	○	○	○	
		Parameter writing	×[*6]	×[*6]	×[*6]	×[*6]	×[*6]	
		Parameter read	○	○	○	○	○	
		Inverter reset	○	○	○	○	○	
Option	—	Operation command (start, stop)	×	×	×	×	×	○[*2]
		Running frequency	×	×	×	×	×	○[*2]
		Monitor	○	○	○	○	○	○
		Parameter writing	×[*6]	×[*6]	×[*6]	×[*6]	×[*6]	○[*5]
		Parameter read	○	○	○	○	○	○
		Inverter reset	×	×	×	×	×	○[*3]

上正科技有限公司
購買、維修、比手冊零組件
電話： 037-466333
Email: service@repairtw.com
Line id: @zzzz
www.repairtw.com

Command interface	Conditions (Pr.551 setting)	Item	Controllability in each operation mode					
			PU operation	External operation	Combined operation mode 1 (Pr.79 = "3")	Combined operation mode 2 (Pr.79 = "4")	NET operation (via RS-485 terminals)*7	NET operation (via option)*8
External control circuit terminal	—	Inverter reset	○	○	○	○	○	
		Operation command (start, stop)	×	○	○	×	×*2	
		Frequency setting	×	○	×	○	×*2	

○: Valid, ×: Invalid, Δ: Partially valid

*1 RS-485 communication via PU connector
*2 Follows the **Pr.338 Communication operation command source** and **Pr.339 Communication speed command source** settings. (Refer to page 239.)
*3 At occurrence of RS-485 communication error, the inverter cannot be reset from the computer.
*4 Only PU stop is enabled. "PS" is displayed on the operation panel during PU stop. Follows the **Pr.75 Reset selection/Disconnected PU detection/PUStop selection** setting. (Refer to page 188.)
*5 Writing of some parameters may be disabled by the **Pr.77 Parameter write selection** setting and the operating condition. (Refer to page 196.)
*6 Some parameters are write-enabled independently of the operation mode and command source presence/absence. Writing is also enabled when **Pr.77** = "2"
(refer to page 196). Parameter clear is disabled.
*7 When **Pr.550 NET mode operation command source selection** = "1" (RS-485 terminals enabled), or **Pr.550 NET mode operation command source selection** = "9999" with no communication option connected.
*8 When **Pr.550 NET mode operation command source selection** = "0" (communication option enabled), or **Pr.550 NET mode operation command source selection** = "9999" with communication option connected.

◆ Operation when a communication error occurs

上正科技有限公司
購買、維修、特價、租賃
電話： 037-461035
Email: service@repairtw.com
Line id: @zzzz
www.repairtw.com

Fault type	Conditions (Pr.551 setting)	Operation in each operation mode at error occurrences					
		PU operation	External operation	Combined operation mode 1 (Pr.79 = "3")	Combined operation mode 2 (Pr.79 = "4")	NET operation (via RS-485 terminals)*5	NET operation (via option)*6
Inverter fault	—	Stop					
PU connector disconnection	2 (PU connector), 9999 (automatic recognition)	Stop/continued*1*4					
	Other than 2	Stop/continued*1					
Communication error at PU connector	2 (PU connector)	Stop/ continued*2	Continued		Stop/ continued*2	Continued	
	Other than 2	Continued					
Communication error at RS-485 terminals	1 (RS-485 terminals)	Stop/ continued*2	Continued		Stop/ continued*2	Continued	
	Other than 1	Continued				Stop/ continued*2	Continued
Communication error at USB connector	3 (USB connector), 9999 (automatic recognition)	Stop/ continued*2	Continued				
	Other than 3	Continued					
Communication error at communication option	—	Continued					Stop/ continued*3

*1 Selectable with **Pr.75 Reset selection/disconnected PU detection/PU stop selection**.
*2 Selectable with **Pr.122 PU communication check time interval, Pr.336 RS-485 communication check time interval**, and **Pr.548 USB communication check time interval**.
*3 The operation depends on the communication option setting.
*4 In the PU JOG operation mode, operation always stops when the PU is disconnected. The operation of PU disconnection (E.PUE) follows the **Pr.75 Reset selection/Disconnected PU detection/PUStop selection** setting.
*5 When **Pr.550 NET mode operation command source selection** = "1" (RS-485 terminals enabled), or **Pr.550 NET mode operation command source selection** = "9999" with no communication option connected.
*6 When **Pr.550 NET mode operation command source selection** = "0" (communication option enabled), or **Pr.550 NET mode operation command source selection** = "9999" with communication option connected.

◆ Selecting the command interface in the Network operation mode (Pr.338, Pr.339)

- Selecting a command interface is required for the following two types of commands: the operation command using the start signals and the signals related to the inverter function selection, and the speed command using signals related to the frequency setting.
- The following table shows the command interface for each function in the Network operation mode, determined by the parameter settings: an external terminal or a communication interface (RS-485 terminals or communication option).

Pr.338 Communication operation command source		0 (NET)			1 (External)			Remarks
Pr.339 Communication speed command source		0: NET	1: EXT	2: EXT	0: NET	1: EXT	2: EXT	
Running frequency command given through communication		NET	—	NET	NET	—	NET	
Terminal 2		—	EXT	—	—	EXT	—	
Terminal 4		—	EXT		—	EXT		
Terminal 1		Compensation						
RL*1	Low-speed operation command / Remote setting (setting clear)	NET	External		NET	External		**Pr.59** ="0": multi-speed setting function. **Pr.59** ≠ "0": remote function.
RM*1	Middle-speed operation command / Remote setting (deceleration)	NET	External		NET	External		
RH*1	High-speed operation command / Remote setting (acceleration)	NET	External		NET	External		
RT*1	Second function selection	NET			External			
AU*1	Terminal 4 input selection	—	Combined		—	Combined		
JOG*1	Jog operation selection	—			External			
CS*1	Selection of automatic restart after instantaneous power failure / flying start	External						
OH*1	External thermal relay input	External						
REX*1	15-speed selection	NET	External		NET	External		**Pr.59** ="0" (multi-speed)
X10*1	Inverter run enable	External						
X11*1	FR-HC2/FR-CC2 connection, instantaneous power failure detection	External						
X12*1	PU operation external interlock	External						
X13*1	External DC injection brake operation start	NET			External			
X14*1	PID control valid	NET	External		NET	External		
X16*1	PU/External operation switchover	External						
X18*1	V/F switchover	NET			External			
MRS*1	Output stop	Combined			External			When **Pr.79** ≠ "7"
	PU operation interlock	External						When **Pr.79** = "7", or when the X12 signal is not assigned.
STP (STOP)*1	Start self-holding selection	—			External			
X28*1	Start-time tuning start external input	NET			External			
X37*1	Traverse function selection	NET			External			
PDI1*1	PID multistage set point setting 1	NET	External		NET	External		
PDI2*1	PID multistage set point setting 2	NET	External		NET	External		
PDI3*1	PID multistage set point setting 3	NET	External		NET	External		
TRG*1	Trace trigger input	Combined			External			
TRC*1	Trace sampling start/end	Combined			External			
X48*1	Power failure stop external	External						
SQ*1	Sequence start	External or NET*			External			*When **Pr.414** = "1", the interface used for signal input is enabled. When **Pr.414** = "2", External is enabled.
X51*1	Fault clear	Combined			External			
JOGF*1	JOG forward rotation command	—			EXT			

上正科技有限公司
購買、維修 此手冊零組件
電話： 037-466333
Email: service@repairtw.com
Line id: @zzzz
www.repairtw.com

Pr.338 Communication operation command source		0 (NET)			1 (External)			Remarks
Pr.339 Communication speed command source		0: NET	1: EXT	2: EXT	0: NET	1: EXT	2: EXT	
JOGR[*1]	JOG reverse rotation command	—			EXT			
STF[*1]	Forward rotation command	NET			External			
STR[*1]	Reverse rotation command	NET			External			
RES[*1]	Inverter reset	External						
X64[*1]	PID forward/reverse action switchover	NET	External		NET	External		
X65[*1]	PU/NET operation switchover	External						
X66[*1]	External/NET operation switchover	External						
X67[*1]	Command source switchover	External						
X70[*1]	DC feeding operation permission signal	NET			External			
X71[*1]	DC feeding cancel signal	NET			External			
X72[*1]	PID P control switchover	NET	External		NET	External		
X73[*1]	Second PID P control switchover	NET	External		NET	External		
X77[*1]	Pre-charge end command	NET	External		NET	External		
X78[*1]	Second pre-charge end command	NET	External		NET	External		
X79[*1]	Second PID forward/reverse action switchover	NET	External		NET	External		
X80[*1]	Second PID control valid	NET	External		NET	External		
PGT[*1]	PID gain tuning start/forced end	NET	External		NET	External		
X84[*1]	Emergency drive execution command	Combined						
X94[*1]	Control signal input for main circuit power supply MC	External						
X95[*1]	Converter unit fault input	External						
X96[*1]	Converter unit fault (E.OHT, E.CPU) input	External						
X97[*1]	Cleaning valid	NET			External			
X98[*1]	Cleaning trigger	NET			External			

*1 Use **Pr.178 to Pr.189 (Input terminal function selection)** to assign the function to an input terminal. (Refer to page 355.)

上耀科技有限公司
購買 維修 此手冊零組件
電話： 037-466333
Email: service@repairtw.com
Line id: @zzzz
www.repairtw.com

[Explanation of Terms in Table]
EXT: External terminal only
NET: Communication interface only
Combined: Either external terminal or communication interface
—: Neither external terminal nor communication interface
Compensation: Only commands given via the external terminal are valid when **Pr.28 Multi-speed input compensation selection** = "1".

NOTE

- The communication interface selection is determined by the setting of **Pr.550** and **Pr.551**.
- The setting of **Pr.338** and **Pr.339** can be changed during operation when **Pr.77** = "2". Note that the changed setting is applied after the inverter has stopped. Until the inverter has stopped, the previous setting of the interface for the operation command and the speed command in the Network operation mode is valid.

◆ Changing the command interface using a signal input via external terminal (X67 signal)

- In the Network operation mode, the command interface for the operation command and the speed command can be changed using the Command source switchover (X67) signal. This method may be useful to use both external terminal and communication interface by using a different interface according to the command type.
- For the X67 signal, set "67" to any of **Pr.178 to Pr.189 (Input terminal function selection)** to assign the function to a control terminal.

- When the X67 signal is OFF, the command interface for the operation command and the speed command is the control terminal.

X67 signal state	Interface for the operation command	Interface for the speed command
Signal not assigned	Determined by **Pr.338** setting	Determined by **Pr.339** setting
ON		
OFF	Control terminal only	

NOTE

- The ON/OFF state of the X67 signal is applied only during a stop. When the terminals are switched during operation, the ON/OFF state is reflected after a stop.
- When the X67 is OFF, a reset via communication is disabled.
- Changing the terminal assignment using **Pr.178 to Pr.189 (Input terminal function selection)** may affect the other functions. Set parameters after confirming the function of each terminal.

Parameters referred to

Pr.28 Multi-speed input compensation selection ☞ page 249
Pr.59 Remote function selection ☞ page 216
Pr.79 Operation mode selection ☞ page 228

5.6.4 Reverse rotation prevention selection

This function can prevent reverse rotation fault resulting from the incorrect input of the start signal.

Pr.	Name	Initial value	Setting range	Description
78 D020	**Reverse rotation prevention selection**	0	0	Both forward and reverse rotations allowed
			1	Reverse rotation disabled
			2	Forward rotation disabled

- Set this parameter to limit the motor rotation to only one direction.
- This parameter is valid for all of the reverse rotation and forward rotation keys of the operation panel and of the parameter unit, the start signals (STF, STR signals) via external terminals, and the forward and reverse rotation commands through communication.

上正科技有限公司
購買、維修、此手冊零組件
電話： 037-466333
Email: service@repairtw.com
Line id: @zzzz
www.repairtw.com

5.6.5 Frequency setting using pulse train input

A pulse train input via terminal JOG can be used to set the inverter's speed command.
Moreover, speed synchronized operation of an inverter can be performed by using the pulse train input and output together.

Pr.	Name	Initial value		Setting range	Description	
		FM	CA		Pulse train input (Terminal JOG)	Pulse train output (Terminal FM)
291 D100	**Pulse train I/O selection**	0		0	JOG signal*1	FM output*2
				1	Pulse train input	FM output*2
				10*2	JOG signal*1	High-speed pulse train output (50% duty)
				11*2	Pulse train input	High-speed pulse train output (50% duty)
				20*2	JOG signal*1	High-speed pulse train output (ON width fixed)
				21*2	Pulse train input	High-speed pulse train output (ON width fixed)
				100*2	Pulse train input	High-speed pulse train output (ON width fixed). Output the pulse train input without changes.
384 D101	**Input pulse division scaling factor**	0		0	Pulse train input disabled	
				1 to 250	Division ratio on the input pulse. The frequency resolution on the input pulse changes according to this setting.	
385 D110	**Frequency for zero input pulse**	0 Hz		0 to 590 Hz	Set the frequency applicable to the time when the input pulse is zero (bias).	
386 D111	**Frequency for maximum input pulse**	60 Hz	50 Hz	0 to 590 Hz	Set the frequency applicable to the time when the input pulse is maximum (gain).	

*1 Function assigned to **Pr.185 JOG terminal function selection**.
*2 Valid only for the FM type inverters.

◆ Selection of pulse train input (Pr.291)

- Setting **Pr.291 Pulse train I/O selection** = "1, 11, 21, or 100" and **Pr.384 Input pulse division scaling factor** ≠ "0" allows the function of terminal JOG to change into a pulse train input for setting of the inverter frequency. In the initial setting, the JOG signal is assigned to terminal JOG. A maximum pulse train of 100k pulses/s can be input.
- Connection with an open collector output system pulse generator

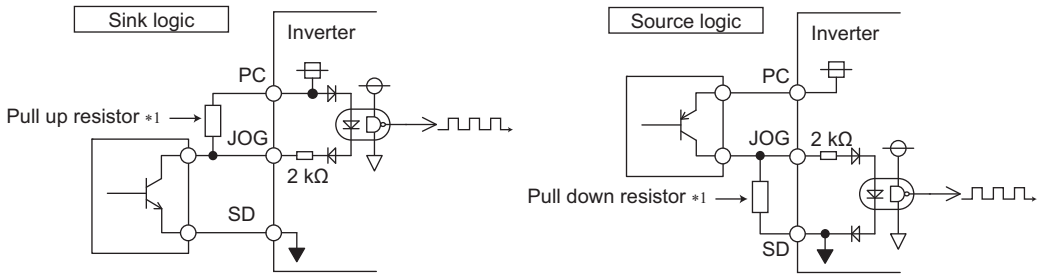

*1 When the wiring length is long with open collector outputs, the influence of stray capacitance causes the pulse to flatten out and prevents the input pulse from being recognized.
When the wiring length is long (10 m or longer of shielded twisted pair cable with a recommended cable gauge of 0.75 mm^2), connect the open collector output signal to the power supply by an external pull-up resistor. The following table shows the reference resistance values for wiring length. The stray capacitance of the wiring changes considerably according to how the cable is laid, thus the above wiring lengths are not guaranteed values. When using a pull-up/down resistor, check the permissible power of the resistor and the permissible load current of the output transistor, and use within the permissible range.

Wiring length	Less than 10 m	10 to 50 m	50 to 100 m
Pull-up/down resistor	Not required	1 kΩ	470 Ω
Load current (reference)	10 mA	35 mA	65 mA

上揚科技有限公司
購買、維修 此手冊零組件
電話： 037-466333
Email: service@repairtw.com
Line id: @zzzz
www.repairtw.com

- Connection with a complementary output system pulse generator

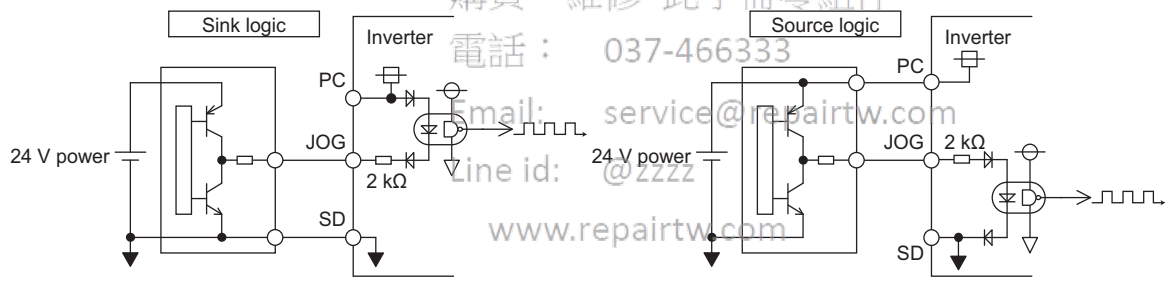

NOTE

- When pulse train input is selected, the function assigned to terminal JOG using **Pr.185 JOG terminal function selection** is disabled.
- **Pr.291** is the selection parameter for pulse train output / FM output. Thus, before changing the setting, check the specifications of the device connected to the terminal FM. (For the pulse train output, refer to page 300.)

◆ Pulse train input specification

Item		Specification
Supported pulse method		Open collector output / Complementary output (24 V power supply voltage)
HIGH input level		20 V or more (voltage between JOG and SD)
LOW input level		5 V or less (voltage between JOG and SD)
Maximum input pulse rate		100k pulses/s
Minimum input pulse width		2.5 μs
Input resistance/load current		2 kΩ (typ) / 10 mA (typ)
Maximum wiring length (reference value)	Open collector output method	10 m (0.75 mm^2/twisted pair)
	Complementary output method	100 m (output resistance 50 Ω)*1
Detection resolution		1/3750

*1 The wiring length of complementary output is dependent on the output wiring specification of the complementary output unit. The stray capacitance of the wiring changes considerably according to how the cable is laid, so the maximum wiring length is not a guaranteed value.

◆ Adjustment of pulse train and frequency (Pr.385, Pr.386)

- The frequency during zero input pulse and maximum input pulse can be set with **Pr.385 Frequency for zero input pulse** and **Pr.386 Frequency for maximum input pulse**, respectively.

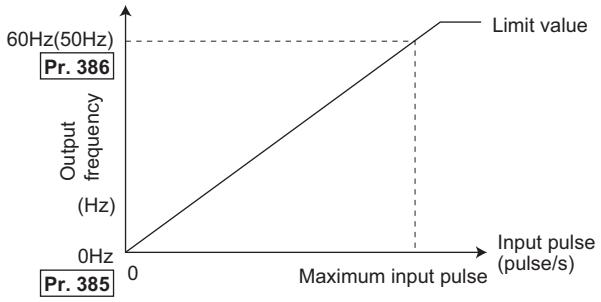

*1 Limit value = (**Pr.386** - **Pr.385**) × 1.1 + **Pr.385**

◆ How to calculate the input pulse division scaling factor (Pr.384)

The maximum number of input pulses can be calculated by the following formula with **Pr.384 Input pulse division scaling factor**:

Maximum number of pulses (pulse/s) = **Pr.384** × 400 (maximum 100k pulses/s)

(number of detectable pulses = 11.45 pulses/s)

For example, to run the invert at 0 Hz when pulse train input is zero and at 30 Hz when pulse train is 4000 pulses/sec, set the inverter as follows:

Pr.384 = 10 (maximum number of input pulses 4000 pulses/s)

Pr.385 = 0 Hz, **Pr.386** = 30 Hz (pulse train limit value 33 Hz)

上正科技有限公司
購買、維修、此手冊零組件
電話: 037-466333
Email: service@repairtw.com
Line id: @zzzz
www.repairtw.com

NOTE

- The priority of the frequency command given by the external signals is as follows: JOG operation > multi-speed operation > terminal 4 analog input > pulse train input. When pulse train input is enabled (**Pr.291** = "1, 11, 21, or 100" and **Pr.384** ≠ "0"), terminal 2 analog input becomes disabled.

◆ Speed synchronized operation by pulse input/output

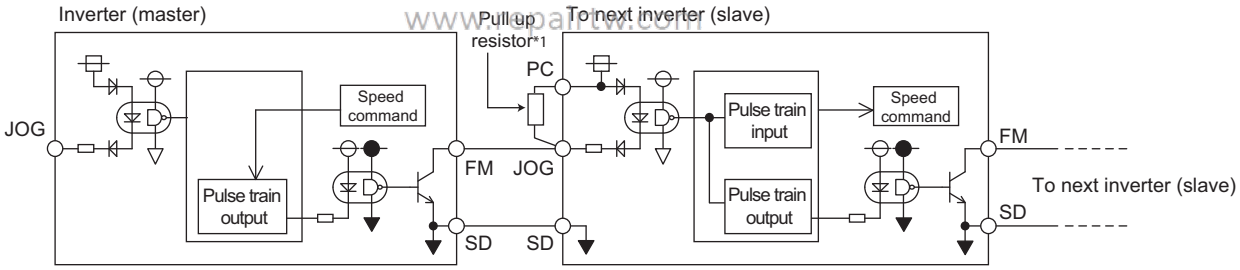

*1 When the wiring length between FM and JOG is long, the influence of stray capacitance causes the pulse to flatten out and prevents the input pulse from being recognized. When the wiring length is long (10 m or longer of shielded twisted pair cable with a recommended cable size of 0.75 mm^2), connect between terminal JOG and terminal PC with an external pull-up resistor. The following table shows the reference resistance values for wiring length.

Wiring length	Less than 10 m	10 to 50 m	50 to 100 m
Pull-up resistor	Not required	1 kΩ	470 Ω
Load current (reference)	10 mA	35 mA	65 mA

The stray capacitance of the wiring changes considerably according to how the cable is laid, thus the above wiring lengths are not guaranteed values.

When using a pull-up/down resistor, check the permissible power of the resistor and the permissible load current (terminal PC: 100 mA, high-speed pulse train output: 85 mA), and use within the permissible range.

- Setting "100" in **Pr.291** allows the use of the entire pulse train input for the pulse train output (via terminal FM) just as they are.

  Connecting in a daisy chain enables speed synchronized operation of multiple inverters.
- Set **Pr.384** to "125" for inverters that receive pulse train since the maximum pulse train output is 50k pulses/s.
- The maximum number of input pulses should be 50k pulses/s.

- When performing synchronized operation, wire according to the following procedure. (This is to prevent contact input of 24 V being applied to terminal FM.)

1. Set pulse train output (setting other than "0 or 1") to **Pr.291** on the master side inverter.
2. Inverter power OFF
3. Wire the slave side terminal JOG-SD to the master side terminal FM-SD.
4. Turn the inverter power supply ON.

NOTE

- After changing the **Pr.291** setting, connect the JOG terminal to the terminal FM-SD. When FM output (voltage output) is taken as the pulse train, take caution to prevent voltage from being applied to the terminal FM.
- Use sink logic (factory setting) for the slave side inverter. The inverter does not operate properly with source logic.

◆ Speed synchronized operation specification

Item	Specification
Output pulse format	Pulse width fixed (10 μs)
Pulse rate	0 to 50k pulses/s
Pulse propagation delay	1 to 2 μs per unit*1

*1 A pulse propagation delay of about 1 to 2 μs in the slave occurs and further increases when the wiring length is long.

Parameters referred to

Pr.291 (Pulse train I/O selection) ☞ page 297

5.6.6 JOG operation

上正科技有限公司
購買、維修 此手冊零組件
電話：037-166833
Email: service@repairtw.com
Line id: @zzzz
www.repairtw.com

The frequency and acceleration/deceleration time for JOG operation can be set. JOG operation is possible in both External operation and PU.

JOG operation can be used for conveyor positioning, test operation, etc.

Pr.	Name	Initial value	Setting range	Description
15 **D200**	**Jog frequency**	5 Hz	0 to 590 Hz	Set the frequency for JOG operation.
16 **F002**	**Jog acceleration/ deceleration time**	0.5 s	0 to 3600 s	Set the motor acceleration/deceleration time during JOG operation. For the acceleration/deceleration time, set the time until the frequency*1 set in **Pr.20 Acceleration/deceleration reference frequency** is reached. The acceleration/deceleration times cannot be set separately.

Note that these parameters are categorized as a simple mode parameter when the LCD operation panel (FR-LU08) or the parameter unit (FR-PU07) is used. Setting of this parameter is enabled when the operation panel (FR-DU08) is connected and "0" is set to **Pr.160 User group read selection**. (Refer to page 204.)

*1 The **Pr.20** initial value is set to 60 Hz for the FM type and to 50 Hz for the CA type.

◆ JOG operation using the external signals

- Operation can be started and stopped by the start signals (STF and STR signals) when the Jog operation selection (JOG) signal is ON. (For the operation method, refer to page 129.)
- While the JOGF or JOGR signal is input, Jog frequency setting (**Pr.15**) is used for operation. The rotation is forward while the JOGF signal is input, and the rotation is reverse while the JOGR signal is input. (Direct JOG function)
- Use the JOG acceleration/deceleration time function (**Pr.16**) to set the acceleration/deceleration time for JOG operation.
- To use each signal, set the corresponding number selected from the following table in any of **Pr.178 to Pr.189 (Input terminal function selection)** to assign the function to an output terminal.

Input signal	Pr.178 to Pr.189 settings
JOG	5 (**Pr.185** initial value)
JOGF	57
JOGR	58

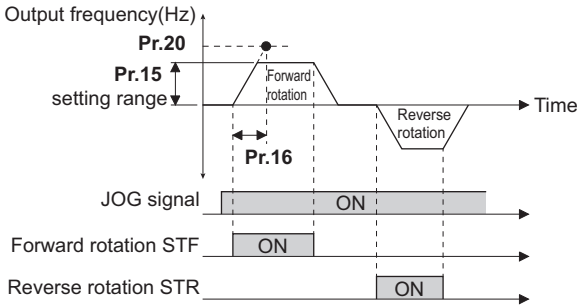

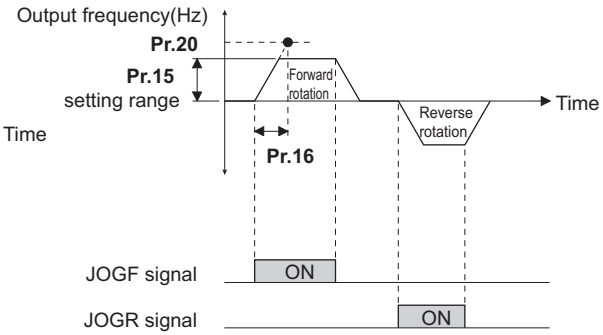

◆ JOG operation using the PU

- When the operation panel or parameter unit is in the JOG operation mode, the motor jogs only while the start button is pressed. (For the operation method, refer to page 130.)

NOTE

- The reference frequency during acceleration/deceleration depends on the **Pr.29 Acceleration/deceleration pattern selection** setting. (Refer to page 219.)
- The **Pr.15** setting should be equal to or higher than the **Pr.13 Starting frequency** setting.
- Changing the terminal assignment using **Pr.178 to Pr.189 (input terminal function selection)** may affect the other functions. Set parameters after confirming the function of each terminal.
- During JOG operation, the second acceleration/deceleration function using the RT signal is disabled. (Other second functions are enabled (refer to page 358).)
- When the JOGR or STR signal is input while the JOGF signal is input, the motor is decelerated to stop.
- When the JOGF or STF signal is input while the JOGR signal is input, the motor is decelerated to stop.
- The three-wire type connection is not available for the JOGF and JOGR signals.
- When **Pr.79 Operation mode selection** = "4", JOG operation is started by one push of FWD / REV on the operation panel and stopped by STOP RESET.
- This function is invalid when **Pr.79** = "3".
- To perform the JOG operation using the external signals, select the setting of "JOG signal" for the input via terminal JOG in **Pr.291 Pulse train I/O selection**. (Refer to page 245.)

福利技術有限公司
購買、維修 此手冊零組件
電話： 037-466333
Email: service@repairtw.com
Line id: @zzzz
www.repairtw.com

Parameters referred to

Pr.13 Starting frequency ☞ page 225
Pr.20 Acceleration/deceleration reference frequency, Pr.21 Acceleration/deceleration time increments ☞ page 216
Pr.29 Acceleration/deceleration pattern selection ☞ page 219
Pr.79 Operation mode selection ☞ page 228
Pr.178 to Pr.189 (Input terminal function selection) ☞ page 355

5.6.7 Operation by multi-speed setting

Use these parameters to change among pre-set operation speeds with the terminals. The speeds are pre-set with parameters.

Any speed can be selected by simply turning ON/OFF the contact signals (RH, RM, RL, and REX signals).

Pr.	Name	Initial value		Setting range	Description
		FM	CA		
28 **D300**	**Multi-speed input compensation selection**	0		0	Without compensation
				1	With compensation
4 **D301**	**Multi-speed setting (high speed)**	60 Hz	50 Hz	0 to 590 Hz	Sets the frequency when RH is ON.
5 **D302**	**Multi-speed setting (middle speed)**	30 Hz		0 to 590 Hz	Sets the frequency when RM is ON.
6 **D303**	**Multi-speed setting (low speed)**	10 Hz		0 to 590 Hz	Sets the frequency when RL is ON.
24 **D304**	**Multi-speed setting (speed 4)**	9999		0 to 590 Hz, 9999	Frequency from 4th speed to 15th speed can be set according to the combination of the RH, RM, RL and REX signals. 9999: Not selected
25 **D305**	**Multi-speed setting (speed 5)**				
26 **D306**	**Multi-speed setting (speed 6)**				
27 **D307**	**Multi-speed setting (speed 7)**				
232 **D308**	**Multi-speed setting (speed 8)**				
233 **D309**	**Multi-speed setting (speed 9)**				
234 **D310**	**Multi-speed setting (speed 10)**				
235 **D311**	**Multi-speed setting (speed 11)**				
236 **D312**	**Multi-speed setting (speed 12)**				
237 **D313**	**Multi-speed setting (speed 13)**				
238 **D314**	**Multi-speed setting (speed 14)**				
239 **D315**	**Multi-speed setting (speed 15)**				

上正科技有限公司
購買、維修 此手冊零組件
電話： 037-466333
Email: service@repairtw.com
www.repairtw.com

◆ Multi-speed setting (Pr.4 to Pr.6)

- The inverter operates at frequencies set in **Pr.4** when the RH signal is ON, **Pr.5** when the RM signal is ON, or **Pr.6** when the RL signal is ON.

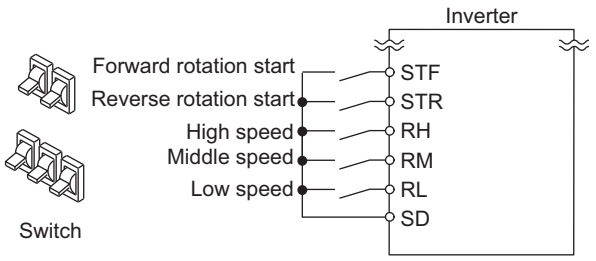

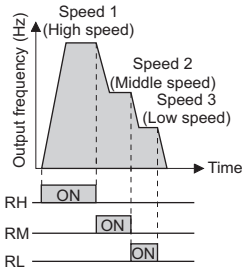

NOTE

- In the initial setting, if two or more speed switches (signals) are simultaneously turned ON, priority is given to the switch (signal) for the lower speed. For example, when both RH and RM signals turn ON, the RM signal (**Pr.5**) has the higher priority.
- The RH, RM and RL signals are assigned to the terminals RH, RM and RL, respectively, in the initial status. To assign each signal to a different terminal, set "0" (RL signal), "1" (RM signal), or "2" (RH signal) in any of **Pr.178 to Pr.189 (Input terminal function selection)**.

◆ Multi-speed setting for 4th speed or more (Pr.24 to Pr.27, Pr.232 to Pr.239)

- The frequency from 4th speed to 15th speed can be set according to the combination of the RH, RM, RL, and REX signals. Set the running frequencies in **Pr.24 to Pr.27, Pr.232 to Pr.239**. (In the initial status, 4th to 15th speeds are invalid.)

- For the terminal used for REX signal input, set "8" in any of **Pr.178 to Pr.189 (Input terminal function selection)** to assign the function.

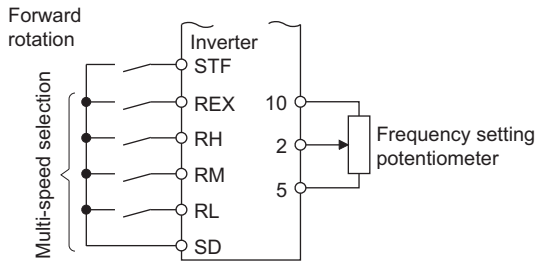

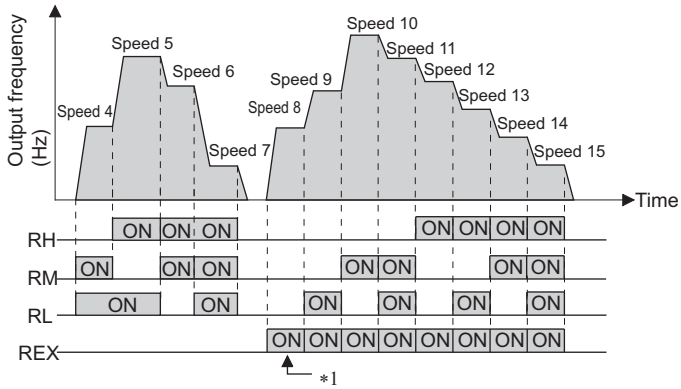

*1 When the RH, RM and RL signals are OFF and the REX signal is ON while "9999" is set to **Pr.232 Multi-speed setting (8 speed)**, the inverter operates at the frequency set in **Pr.6**.

5

◆ Input compensation of multi-speed setting (Pr.28)

- Speed (frequency) can be compensated for the multi-speed setting and the remote setting by inputting the frequency setting compensation signal (terminals 1, 2).

NOTE

- The priority of the frequency commands given by the external signals are as follows: JOG operation > multi-speed operation > terminal 4 analog input > pulse train input > terminal 2 analog input. (For details on frequency commands given by analog input, refer to page 339.)
- The input compensation of multi-speed setting is enabled when the inverter is in the External operation mode or PU/External combined operation mode (**Pr.79** = "3 or 4").
- Multi-speed parameters can also be set during PU operation or External operation.
- The **Pr.24 to Pr.27 and Pr.232 to Pr.239** settings have no priority among them.
- When **Pr.59 Remote function selection** ≠ "0", the multi-speed setting is invalid since the RH, RM, and RL signals are for remote setting.
- When performing analog input compensation, set **Pr.28 Multi-speed input compensation selection** to "1".
- Select the terminals (terminals 1, 2) to use for compensation input voltage (0 to ± 5 V, 0 to ± 10 V) at **Pr.73 Analog input selection**.
- When using terminal 1 for compensation input, set **Pr.868 Terminal 1 function assignment** = "0 (initial value)".
- Changing the terminal assignment using **Pr.178 to Pr.189 (Input terminal function selection)** may affect the other functions. Set parameters after confirming the function of each terminal.

上正科技有限公司
購買、維修、出手用零組件
電話： 037-466333
Email: service@repairtw.com
Line id: @2222
www.repairtw.com

Parameters referred to

Pr.15 Jog frequency ☞ page 248
Pr.59 Remote function selection ☞ page 222
Pr.73 Analog input selection ☞ page 330
Pr.79 Operation mode selection ☞ page 228
Pr.178 to Pr.189 (Input terminal function selection) ☞ page 355
Pr.868 Terminal 1 function assignment ☞ page 334

5.7 (H) Protective function parameter

Purpose	Parameter to set			Refer to page
To protect the motor from overheating	Electronic thermal O/L relay	P.H000, P.H006, P.H010, P.H016, P.H020, P.H021	Pr.9, Pr.51, Pr.561, Pr.607, Pr.608, Pr.1016	252
To set the overheat protection characteristics for the motor	Free thermal O/L relay	P.H001 to P.H005, P.H011 to P.H015	Pr.600 to Pr.604, Pr.692 to Pr.696	258
To extend the life of the cooling fan	Cooling fan operation selection	P.H100	Pr.244	258
To detect an earth (ground) fault at start	Earth (ground) fault detection at start	P.H101	Pr.249	259
To vary the operating level of the undervoltage protective function	Undervoltage level	P.H102	Pr.598	260
To initiate an inverter protective function	Fault initiation	P.H103	Pr.997	260
To disable the I/O phase loss protective function	I/O phase loss protection selection	P.H200, P.H201	Pr.251, Pr.872	260
To restart using the retry function when the protective function is activated	Retry operation	P.H300 to P.H303	Pr.65, Pr.67 to Pr.69	261
To operate without activating protective functions in case of emergency	Emergency drive	P.H320 to P.H324	Pr.514, Pr.515, Pr.523, Pr.524, Pr.1013	263
To set the upper and lower limits of the output frequency	Maximum/minimum frequency	P.H400 to P.H402	Pr.1, Pr.2, Pr.18	271
To operate avoiding resonance points	Frequency jump	P.H420 to P.H425, P.H429	Pr.31 to Pr.36, Pr.552	272
To limit the output current so that the inverter protective function does not activate	Stall prevention	P.H500, P.H501, P.H600, P.H601, P.H610, P.H611, P.H620, P.H621, P.H631, P.M430, P.T010, P.T040	Pr.22, Pr.23, Pr.48, Pr.49, Pr.66, Pr.148, Pr.149, Pr.154, Pr.156, Pr.157, Pr.858, Pr.868	273
To monitor for load faults	Load characteristics fault detection	P.H520 to P.H527, P.H531 to P.H535	Pr.1480 to Pr.1492	281
To shut off output if the operation panel disconnects	Overspeed detection level	P.H800	Pr.374	285

上正科技有限公司
購買、維修 此手冊零組件
電話： 037-466333
Email: service@repairtw.com
Line Id: @2222
www.repairtw.com

5.7.1 Motor overheat protection (electronic thermal O/L relay)

Set the current of the electronic thermal relay function to protect the motor from overheating. Such settings provide the optimum protective characteristic considering the low cooling capability of the motor during low-speed operation.

Pr.	Name	Initial value	Setting range	Description
9 H000	Electronic thermal O/L relay	Inverter rated current	0 to 500 A[*1] 0 to 3600 A[*2]	Set the rated motor current.
600 H001	First free thermal reduction frequency 1	9999	0 to 590 Hz 9999	The electronic thermal O/L relay operation level can be changed to match the motor temperature characteristics with the combination of these three points (**Pr.600, Pr.601**), (**Pr.602, Pr.603**), (**Pr.604, Pr.9**). 9999: Free thermal O/L relay invalid
601 H002	First free thermal reduction ratio 1	100%	1 to 100% 9999	
602 H003	First free thermal reduction frequency 2	9999	0 to 590 Hz 9999	
603 H004	First free thermal reduction ratio 2	100%	1 to 100% 9999	
604 H005	First free thermal reduction frequency 3	9999	0 to 590 Hz 9999	
607 H006	Motor permissible load level	150%	110 to 250%	Set the permissible load according to the motor characteristics.

Pr.	Name	Initial value	Setting range	Description
51 **H010**	**Second electronic thermal O/L relay**	9999	0 to 500 A*1	Enabled when the RT signal is ON. Set the rated motor current.
			0 to 3600 A*2	
			9999	Second electronic thermal O/L relay invalid
692 **H011**	**Second free thermal reduction frequency 1**	9999	0 to 590 Hz	The electronic thermal O/L relay operation level can be changed to match the second motor temperature characteristics with the combination of these three points (**Pr.692, Pr.693**), (**Pr.694, Pr.695**), (**Pr.696, Pr.51**) when the RT signal is ON. 9999: Second free thermal O/L relay invalid
			9999	
693 **H012**	**Second free thermal reduction ratio 1**	100%	1 to 100%	
			9999	
694 **H013**	**Second free thermal reduction frequency 2**	9999	0 to 590 Hz	
			9999	
695 **H014**	**Second free thermal reduction ratio 2**	100%	1 to 100%	
			9999	
696 **H015**	**Second free thermal reduction frequency 3**	9999	0 to 590 Hz	
			9999	
608 **H016**	**Second motor permissible load level**	9999	110 to 250%	Set the permissible frequency when the RT signal is ON.
			9999	The **Pr.607** setting is applied even when the RT signal is ON.
561 **H020**	**PTC thermistor protection level**	9999	0.5 to 30 kΩ	Set the PTC thermistor protection level (resistance).
			9999	PTC thermistor protection disabled
1016 **H021**	**PTC thermistor protection detection time**	0 s	0 to 60 s	Set the time from when the resistance of the PTC thermistor reaches the protection level until the protective function is activated.

*1 The setting range for the FR-F820-02330(55K) or lower and FR-F840-01160(55K) or lower. The minimum setting increment is 0.01 A.
*2 The setting range for the FR-F820-03160(75K) or higher and FR-F840-01800(75K) or higher. The minimum setting increment is 0.1 A.

◆ Electronic thermal O/L relay operation characteristic for induction motor (Pr.9)

上正科技有限公司
購買、維修、此手冊零組件
電話： 037-466333
Email: service@repairman.com
Line id: @zzzz
www.repairman.com

- This function detects the overload (overheat) of the motor and shut off the inverter output by stopping the operation of the transistor at the inverter output side.
- Set the rated current (A) of the motor in **Pr.9 Electronic thermal O/L relay**. (If the motor has both 50 Hz and 60 Hz ratings and the **Pr.3 Base frequency** is set to 60 Hz, set to 1.1 times the 60 Hz rated motor current.)
- Set "0" in **Pr.9** to avoid activating the electronic thermal relay function; for example, when using an external thermal relay for the motor.
  (Note that the output transistor protection of the inverter is activated. (E.THT))
- When using the Mitsubishi Electric constant-torque motor, set **Pr.71 Applied motor** = "1, 13 to 16, 50, 53, 54". (This setting enables the 100% constant-torque characteristic in the low-speed range.)

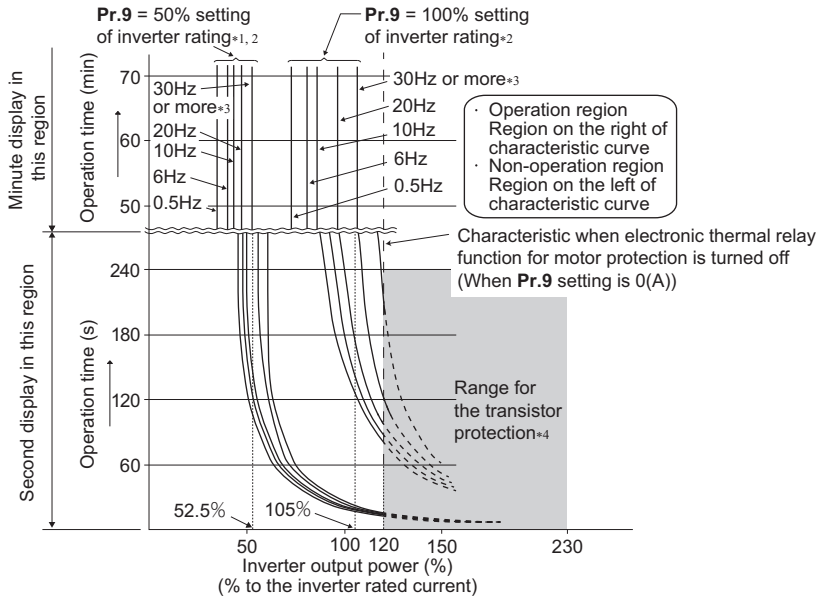

*1 When setting **Pr.9** to a value (current value) of 50% of the inverter rated current
*2 The % value denotes the percentage to the rated inverter current. It is not the percentage to the rated motor current.

*3 When the electronic thermal O/L relay of the Mitsubishi Electric constant-torque motor is set, the characteristic curve is as shown in this diagram at 6 Hz or higher. (For selection of the operation characteristic , refer to page 362.)

*4 Transistor protection is activated depending on the temperature of the heatsink. The protection may be activated even with less than 120% depending on the operating conditions.

NOTE

- The internal accumulated heat value of the electronic thermal relay function is reset to the initial value by the inverter's power reset or reset signal input. Avoid unnecessary reset and power-OFF.
- Install an external thermal relay (OCR) between the inverter and motors to operate several motors, a multi-pole motor or a dedicated motor with one inverter. When setting an external thermal relay, note that the current indicated on the motor rating plate is affected by the line-to-line leakage current. (Refer to page 84.) The cooling effect of the motor drops during low-speed operation. Use a thermal protector or a motor with built-in thermistor.
- The protective characteristic of the electronic thermal O/L relay is degraded when there is a large difference in capacity between the inverter and motor, and when the set value is small. In such case, use an external thermal relay.
- A dedicated motor cannot be protected by an electronic thermal O/L relay. Use an external thermal relay.
- The transistor protection thermal O/L relay is activated early when the **Pr.72 PWM frequency selection** setting is increased.

◆ Electronic thermal O/L relay when using IPM motor (Pr.9)

- This function detects the overload (overheat) of the motor and shut off the inverter output by stopping the operation of the transistor at the inverter output side.
- Set the rated current (A) of the motor in **Pr.9 Electronic thermal O/L relay**. Performing IPM parameter initialization automatically sets the rated current of the IPM motor. (Refer to page 177.)
- Set "0" in **Pr.9** to avoid activating the electronic thermal relay function; for example, when using an external thermal relay for the motor.
  (Note that the output transistor protection of the inverter is activated. (E.THT))
- The following figures show the electronic thermal O/L relay operation characteristics when Mitsubishi Electric IPM motors are used. The area left of the characteristic curve is the normal operation area, and the area right of the characteristic curve is the protective function activated area.

上環科技有限公司
購買、維修 此手冊零組件
電話： 037-466333
Email: service@repairtw.com
Line id: @zzz
www.repairtw.com

MM-EFS (1500 r/min specification), MM-THE4

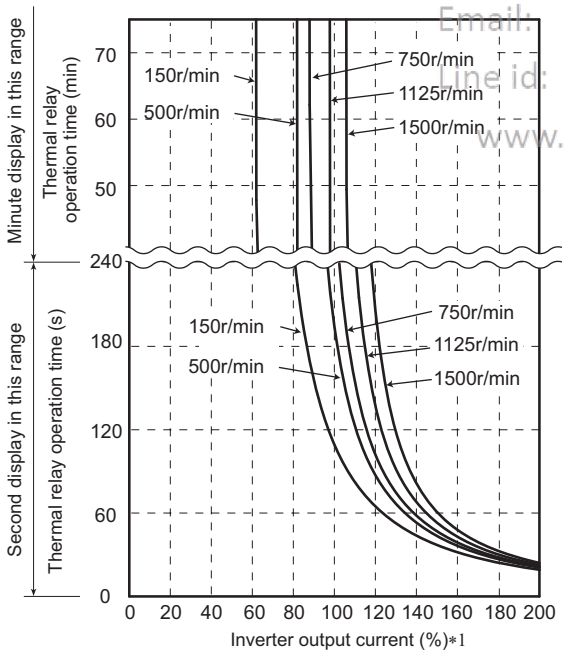

MM-EFS (3000 r/min specification)

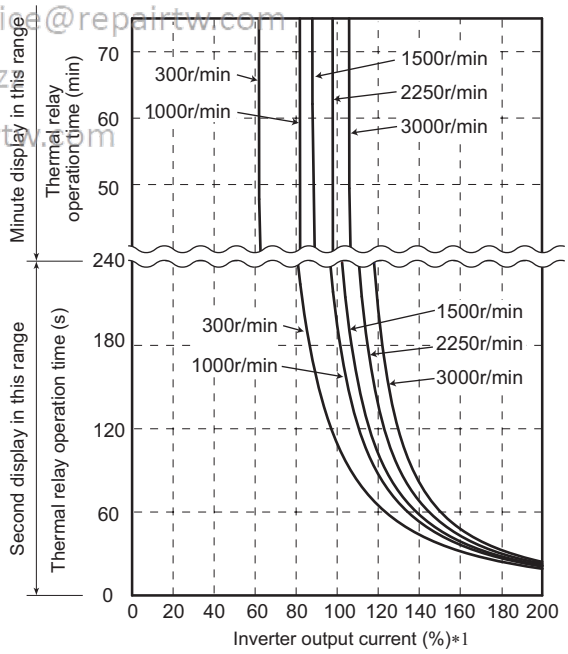

*1 The % value denotes the percentage to the rated motor current.

NOTE

- The internal accumulated heat value of the electronic thermal relay function is reset to the initial value by the inverter's power reset or reset signal input. Avoid unnecessary reset and power-OFF.
- When using a PM motor other than MM-CF, set the free thermal parameters (**Pr.600 to Pr.604**) in accordance with the motor characteristic.
- The transistor protection thermal O/L relay is activated early when the **Pr.72 PWM frequency selection** setting is increased.

◆ Set two types of electronic thermal O/L relays (Pr.51)

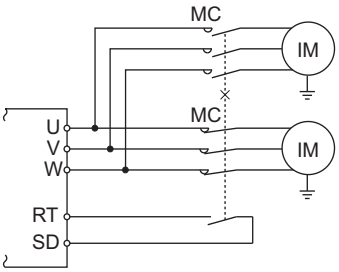

- These settings are used when rotating two motors with different rated current separately by a single inverter. (When rotating two motors together, use an external thermal relay.)
- Set the rated motor current for the second motor in **Pr.51 Second electronic thermal O/L relay**.
- While the RT signal is ON, the setting values of **Pr.51** is referred to provide thermal protection.

Pr.450 Second applied motor	Pr.9 Electronic thermal O/L relay	Pr.51 Second electronic thermal O/L relay	RT signal OFF		RT signal ON	
			First motor	Second monitor	First motor	Second monitor
9999	0	9999	×	×	×	×
		0	×	×	×	×
		0.01 to 500 (0.1 to 3600)	×	Δ	×	○
9999	Other than 0	9999	○	×	○	×
		0	○	×	Δ	×
		0.01 to 500 (0.1 to 3600)	○	Δ	Δ	○
Other than 9999	0	9999	×	×	×	×
		0	×	×	×	×
		0.01 to 500 (0.1 to 3600)	×	Δ	×	○
Other than 9999	Other than 0	9999	○	Δ	Δ	○
		0	○	×	Δ	×
		0.01 to 500 (0.1 to 3600)	○	Δ	Δ	○

上正科技有限公司
購買、維修 此手冊零組件
電話： 037-466333
Email: service@repairtw.com
line id: @zzzz
www.repairtw.com

○: Values are accumulated by using the output current.
Δ: Values are accumulated by assuming the output current is "0 A" (cooling processing).
×: Electronic thermal O/L relay does not operate.

NOTE

- The RT signal is the Second function selection signal. The RT signal also enables other second functions. (Refer to page 358.)
- The RT signal is assigned to the terminal RT in the initial status. Set "3" in one of **Pr.178 to Pr.189 (Input terminal function selection)** to assign the RT signal to another terminal.

◆ Acceleration time setting (Pr.607, Pr.608)

The electronic thermal O/L relay operation characteristic can be changed by setting the permissible load level according to the motor characteristics.

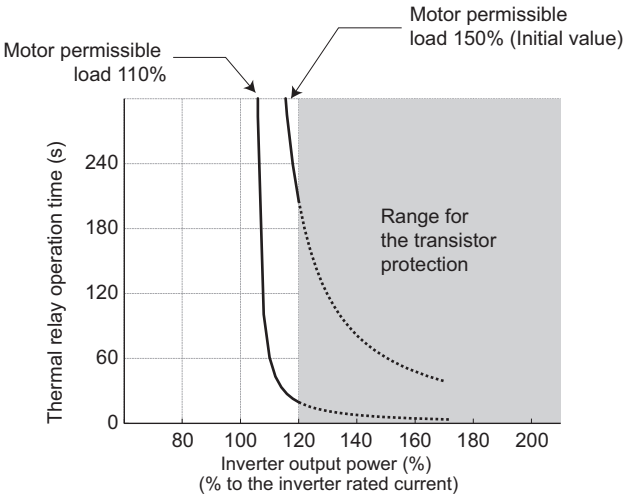

Example of motor permissible load setting (when Pr.9="100% of the inverter rating")

◆ Electronic thermal O/L relay pre-alarm (TH) and warning signal (THP signal)

- If the accumulated electronic thermal value reaches 85% of the **Pr.9** or **Pr.51** setting, electronic thermal O/L relay function pre-alarm (TH) is displayed and the electronic thermal O/L relay pre-alarm (THP) signal is output. If the value reaches 100% of the **Pr.9** setting, the motor thermal protection (E.THM/E.THT) is activated to shut off the inverter output. The inverter output is not shut off with the TH display.
- For the terminal used for the THP signal output, assign the function by setting "8 (positive logic) or 108 (negative logic)" in any of **Pr.190 to Pr.196 (Output terminal function selection)**.

上正科技有限公司
購買、維修此手冊零組件
電話： 037-466333
Email: service@repairtw.com
Line id: @zzzz
www.repairtw.com

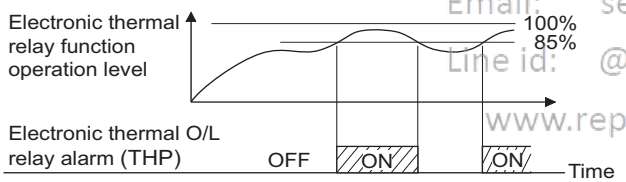

NOTE

- Changing the terminal assignment using **Pr.190 to Pr.196 (Output terminal function selection)** may affect the other functions. Set parameters after confirming the function of each terminal.

◆ External thermal relay input (OH signal, E.OHT)

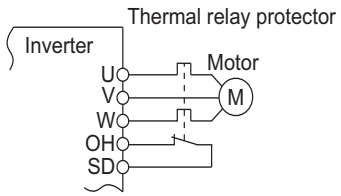

External thermal relay input connection diagram

- The External thermal relay input (OH) signal is used when using the external thermal relay or the thermal protector built into the motor to protect the motor from overheating.
- When the thermal relay is activated, the inverter output is shut off by the external thermal relay (E.OHT).
- For the terminal used for the OH signal input, set "7" in any of **Pr.178 to Pr.189 (Input terminal function selection)** to assign the function.

NOTE

- Changing the terminal assignment using **Pr.178 to Pr.189 (input terminal function selection)** may affect the other functions. Set parameters after confirming the function of each terminal.

◆ PTC thermistor input (Pr.561, Pr.1016, E.PTC)

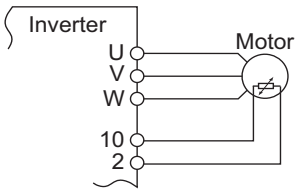

PTC thermistor input connection diagram

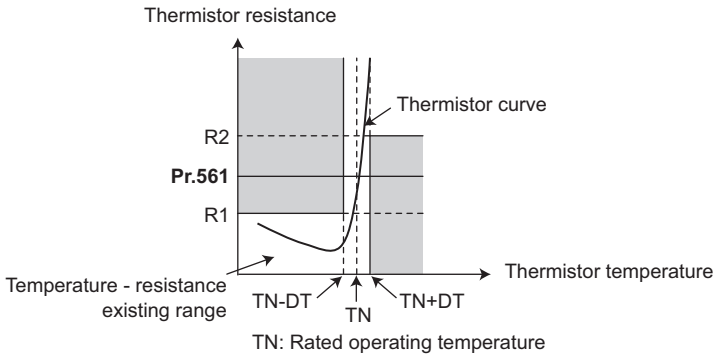

Example of PTC thermistor characteristics

- Output from the PTC thermistor, which is built into the motor, can be input to the terminals 2 and 10. If the input from the PTC thermistor reaches the resistor value set in **Pr.561 PTC thermistor protection level**, the PTC thermistor operation (E.PTC) shuts off the inverter output.
- Confirm the characteristic of the PTC thermistor to be used, and set the resistance for **Pr.561** around the center of the R1 and R2 values shown on the figure above so that it does not deviate from the protective function activating temperature TN. If the **Pr.561** setting becomes too close to R1 or R2, the protective function activating temperature may be too hot (protection is delayed), or too cold (too much protection).
- When the PTC thermistor protection is enabled (**Pr.561** ≠ "9999"), the resistance value for the PTC thermistor can be displayed on the operation panel or via RS-485 communication. (Refer to page 288.)
- When the PTC thermistor protection level setting is used, use **Pr.1016 PTC thermistor protection detection time** to set the time from when the resistance of the PTC thermistor reaches the protection level until the protective function (E.PTC) is activated.
- If the resistance of the PTC thermistor falls below the protection level within the protection detection time, the elapsed time count is cleared.

上正科技有限公司
購買、維修 此手冊零組件
電話： 037-466338
Email: service@repairtw.com
Line id: @zzzz
www.repairtw.com

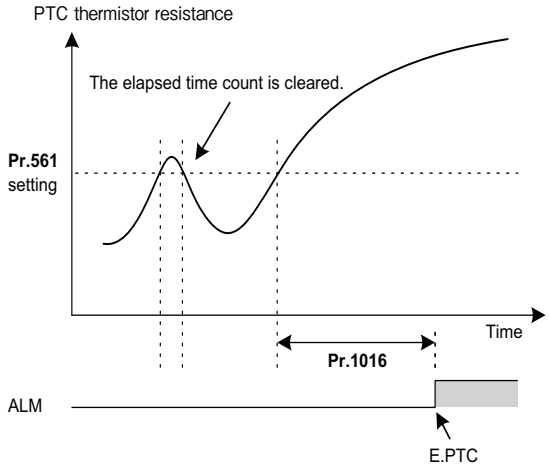

NOTE

- When using terminal 2 for PTC thermistor input (**Pr.561** ≠ "9999"), the terminal 2 does not operate as an analog frequency command terminal. The PID and dancer control functions assigned to the terminal 2 is also disabled. Use **Pr.133 PID** action set point to set the set point for the PID function.
- To input power to the PTC thermistor power supply, always use the terminal 10 and do not use any other terminals or an external power supply. Otherwise, the PTC thermistor protection (E.PTC) does not operate properly.
- When E.PTC is activated, the alarm display, "External protection (AU terminal)", may appear on the parameter unit (FRPU07), but it is not a fault.

◆ Overheat protection to match the characteristic of the motor (Pr.600 to Pr.604, Pr.692 to Pr.696)

- The activation level of the electronic thermal O/L relay can be varied to match the motor temperature characteristic.
- The electronic thermal O/L relay operation level can be set with the combination of three points (**Pr.600, Pr.601**), (**Pr.602, Pr.603**), (**Pr.604, Pr.9**). Two or more points are required for setting.
- The electronic thermal O/L relay operation level can be set with the combination of three points (**Pr.692, Pr.693**), (**Pr.694, Pr.695**), (**Pr.696, Pr.51**) when the RT signal is ON.

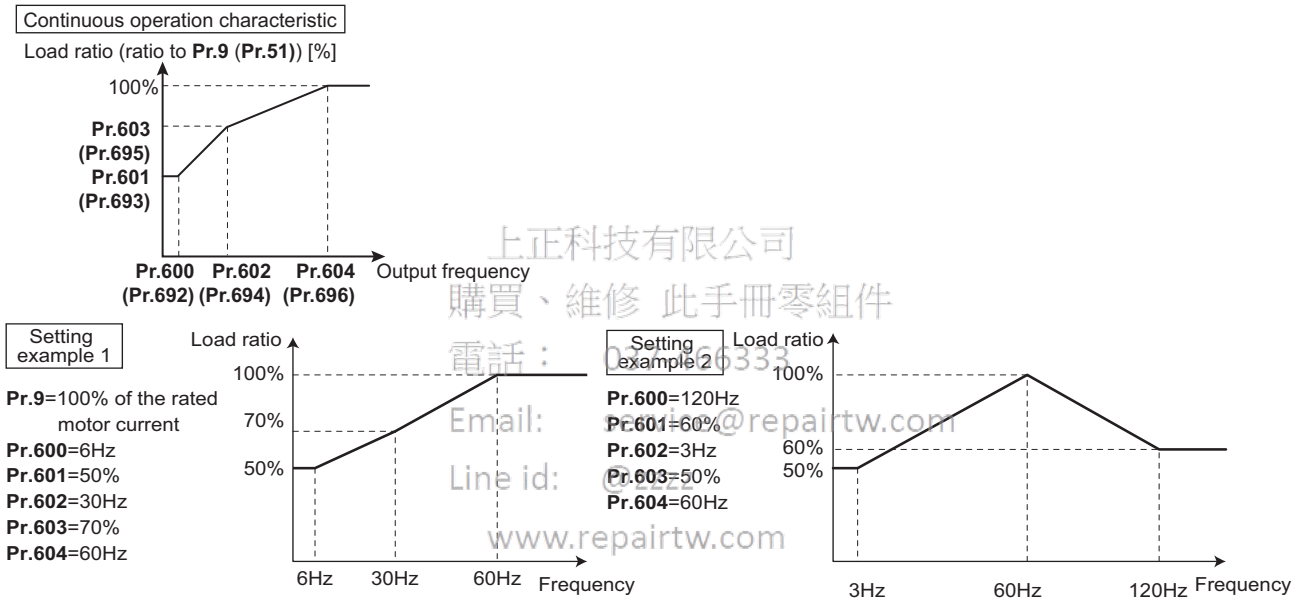

上正科技有限公司
購買、維修 此手冊零組件
電話： 02-2926333
Email: service@repairtw.com
Line id: @2222
www.repairtw.com

- When setting **Pr.600, Pr.602, Pr.604** (**Pr.692, Pr.694, Pr.696**) to the same frequency, the following graph's upper level is applied.

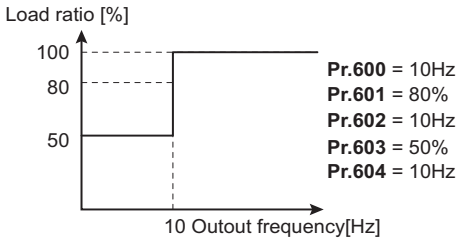

NOTE

- Make sure to set the parameters according to the temperature characteristic of the motor used.

Parameters referred to

Pr.71 Applied motor ☞ page 362
Pr.72 PWM frequency selection ☞ page 207
Pr.178 to Pr.189 (Input terminal function selection) ☞ page 355
Pr.190 to Pr.196 (Output terminal function selection) ☞ page 312

5.7.2 Cooling fan operation selection

A cooling fan is built into the inverter and its operation can be controlled.

Pr.	Name	Initial value	Setting range	Description
244 H100	Cooling fan operation selection	1	0	Cooling fan ON/OFF control disabled. (The cooling fan is always ON at power ON.) A cooling fan operates at power ON.
			1	Cooling fan ON/OFF control enabled. The fan is always ON while the inverter is running. During a stop, the inverter status is monitored and the fan switches ON/OFF according to the temperature.
			101 to 105	Cooling fan ON/OFF control enabled. Set the cooling fan stop delay time within 1 to 5 s.

◆ Cooling fan always ON (Pr.244 = "0")

- When **Pr.244** = "0", the cooling fan operates at power ON. If the fan stops at this time, the inverter finds that the fan operation is faulty and "FN" (FN), the indication of the Fan alarm, is displayed on the operation panel. The Fan fault output (FAN) signal and the Alarm (LF) signal are output.
- For the terminal used for the FAN signal output, set "25 (positive logic)" or "125 (negative logic)" in any of **Pr.190 to Pr.196 (Output terminal function selection)** and for LF signal, set "98 (positive logic)" or "198 (negative logic)".

◆ Cooling fan operation control (Pr.244 = "1" (initial value), "101 to 105")

- The cooling fan operation is controlled when **Pr.244** = "1". When the inverter is running, the cooling fan operates constantly. When the inverter is stopped, the cooling fan operates depending on the temperature of the inverter heatsink. If the fan stops although it meets the conditions for running, fan operation is regarded as faulty, [FN] is displayed on the operation panel, and the fan signal and LF signals are output.
- To prevent the cooling fan from turning ON and OFF repeatedly during frequent starts/stops (inching), the cooling fan stop waiting time can be set. The waiting time when **Pr.244** = "101 to 105" is **Pr.244** - 100 (or 1 s, if the **Pr.244** = "101").

◆ Cooling fan operation command (Y206) signal

- The Cooling fan operation command (Y206) signal can be output when the inverter cooling fan meets the conditions for running. The function can be used when the fan installed on the enclosure is synchronized with the inverter cooling fan.
- The Y206 signal indicates the operating command condition of the inverter cooling fan depending on the power supply ON/OFF or the **Pr.244** settings. The signal does not indicate the actual operation of the cooling fan. (The signal is output even if the cooling fan is stopped due to a fault.)
- To use the Y206 signal, set "206 (positive logic) or 306 (negative logic)" in one of **Pr.190 to Pr.196 (Output terminal function selection)** to assign function to an output terminal.

上正科技有限公司
購買、維修 電子零件及組件
電話： 037-466333
Email: service@repairtw.com
Line id: @zzzz
www.repairtw.com

NOTE

- The cooling fan is installed on the FR-F820-00105(2.2K) or higher and the FR-F840-00083(3.7K) or higher.
- Changing the terminal assignment using **Pr.190 to Pr.196 (Output terminal function selection)** may affect the other functions. Set parameters after confirming the function of each terminal.

Parameters referred to

Pr.190 to Pr.196 (Output terminal function selection) ☞ page 312

5.7.3 Earth (ground) fault detection at start

V/F Magnetic flux

Select whether to make earth (ground) fault detection at start. When enabled, earth (ground) fault detection is performed immediately after a start signal input to the inverter.

Pr.	Name	Initial value	Setting range	Description
249 H101	Earth (ground) fault detection at start	0	0	Without the earth (ground) fault detection at start
			1	With the earth (ground) fault detection at start

- If a ground fault is detected at start while **Pr.249** = "1", the output-side earth (ground) fault overcurrent (E.GF) is displayed and the outputs are shut off. (Refer to page 579.)
- **Pr.249** setting is enabled during V/F control and Advanced magnetic flux vector control.

- When the **Pr.72 PWM frequency selection** setting is high, enable the ground fault detection at start.

NOTE

- Because the detection is performed at start, output is delayed for approx. 20 ms every start.
- Use **Pr.249** to enable/disable ground fault detection at operation start. Ground faults are detected always during operation regardless of the **Pr.249** setting.

5.7.4 Varying the activation level of the undervoltage protective function

If the undervoltage protection (E.UVT) activates due to unstable voltage in the power supply, the undervoltage level (DC bus voltage value) can be changed.

Pr.	Name	Initial value	Setting range	Description
598 **H102**	**Undervoltage level**	9999	175 to 215 VDC*1	Set the DC voltage value at which E.UVT occurs.
			350 to 430 VDC*2	
			9999	E.UVT occurs at 215 VDC (200 V class) / 430 VDC (400 V class).

*1 For the 200 V class
*2 For the 400 V class

NOTE

- Do not use this function when switching to an external battery, since the inrush current when power is restored increases, as the undervoltage level is decreased.
- For the 200 V class inverters, the setting is available for the FR-F820-02330(55K) or lower.
- The **Pr.598** setting is valid for induction motors. When either of the first or second motor is a PM motor, the **Pr.598** setting is invalid.

上正科技有限公司
購買、維修 此手冊零組件
電話: 02-2263-6460
Email: service@repairtw.com
Line id: @zzzz
www.repairtw.com

5.7.5 Initiating a protective function

A fault (protective function) is initiated by setting the parameter.
This function can be used to check how the system operates at activation of a protective function.

Pr.	Name	Initial value	Setting range	Description
997 **H103**	**Fault initiation**	9999	16 to 253	The setting range is same with the one for fault data codes of the inverter (which can be read through communication). Written data is not stored in EEPROM.
			9999	The read value is always "9999". The protective function is not activated with this setting.

- To initiate a fault (protective function), set the assigned number of the protective function to be initiated in **Pr.997**.
- The value set in **Pr.997** is not stored in EEPROM.
- When a protective function activates, the inverter output is shut off, a fault is displayed, and a fault signal (ALM, ALM2) is output.
- The latest fault in the fault history is displayed while the fault initiation function is in operation. After a reset, the fault history goes back to the previous status. (The protective function generated by the fault is not saved in the fault history.)
- Perform inverter reset to cancel the protective function.
- For the selectable parameter by **Pr.997** and the corresponding protective functions, refer to page 566.

NOTE

- If a protective function is already operating, no fault can be activated by **Pr.997**.
- The retry function is disabled when a protective function has been initiated by the fault initiation function.
- If a fault occurs after a protective function has been activated, the protective function indication does not change. The fault is not saved in the fault history either.

5.7.6 I/O phase loss protection selection

The output phase loss protection function, which stops the inverter output if one of the three phases (U, V, W) on the inverter's output side (load side) is lost, can be disabled.

The input phase loss protective function on the inverter input side (R/L1, S/L2, T/L3) can be enabled.

Pr.	Name	Initial value	Setting range	Description
251 **H200**	**Output phase loss protection selection**	1	0	Output phase loss protection disabled
			1	Output phase loss protection enabled
872 **H201**[*1]	**Input phase loss protection selection**	0	0	Input phase loss protection disabled
			1	Input phase loss protection enabled

*1 The setting is available for the standard structure model and the IP55 compatible model.

◆ Output phase loss protection selection (Pr.251)

- When **Pr.251** is set to "0", output phase loss protection (E.LF) becomes invalid.

◆ Input phase loss protection selection (Pr.872) (Standard models and IP55 compatible models)

- When **Pr.872** is set to "1", Input phase loss (E.ILF) protection is activated if one of three phases is detected to be lost for 1 s continuously.

5

NOTE

- When several motors are connected, output phase loss cannot be detected even if the wiring to one motor loses phase.
- If an input phase is lost while **Pr.872** = "1" (with input phase loss protection), **Pr.261 Power failure stop selection** ≠ "0" (power failure stop function enabled), the motor decelerates to stop without outputting E.ILF.
- In the case of R/L1, S/L2 phase loss, the input phase loss protection does not operate, and the inverter output is shut off.
- If an input phase loss continues for a long time, the lives of converter section and capacitor of the inverter become shorter.

Parameters referred to

Pr.261 Power failure stop selection ☞ page 458

上正科技有限公司
購買、維修 此手冊零組件
電話： 037-466333
Email: service@repairtw.com
Line id: @222
www.repairtw.com

5.7.7 Retry function

This function allows the inverter to reset itself and restart at activation of the protective function (fault indication). The retry generating protective functions can also be selected.

When the automatic restart after instantaneous power failure function is selected (**Pr.57 Restart coasting time** ≠ 9999), the restart operation is also performed after a retry operation as well as after an instantaneous power failure. (For restart operation, refer to page 446 and page 451 for selection.)

Pr.	Name	Initial value	Setting range	Description
65 **H300**	**Retry selection**	0	0 to 5	Faults which trigger the retry operation can be selected.
67 **H301**	**Number of retries at fault occurrence**	0	0	The retry function disabled.
			1 to 10	Set the number of retries at a fault occurrence. A fault output is not provided during the retry operation.
			101 to 110	Set the number of retries at a fault occurrence. (The setting value minus 100 is the number of retries.) A fault output is provided during the retry operation.
68 **H302**	**Retry waiting time**	1 s	0.1 to 600 s	Set the time delay from when an inverter fault occurs until the retry operation starts.
69 **H303**	**Retry count display erase**	0	0	Setting "0" clears the retry success counter ("retry success" means that the inverter successfully restarts).

◆ Setting the retry function (Pr.67, Pr.68)

- When the inverter protective function is operating (fault indication), the retry function automatically cancels (resets) the protective function after the time set in **Pr.68**. The retry function then restarts the operation from the starting frequency.

- The retry function is enabled when the **Pr.67** setting is other than "0". Set the number of retries at activation of the protective function in **Pr.67**.

Pr.67 setting	Fault output during retry operation	Retry count
0	—	No retry function
1 to 10	Not available	1 to 10 times
101 to 110	Available	1 to 10 times

- When retries fail consecutively more than the number of times set in **Pr.67**, a retry count excess (E.RET) occurs, resulting in an inverter retries. (Refer to the Retry failure example.)
- Use **Pr.68** to set the waiting time from a protective function activation to a retry in the range of 0.1 to 600 s.
- During retry operation, the During retry (Y64) signal is ON. For the Y64 signal, set "64 (positive logic)" or "164 (negative logic)" in any of **Pr.190 to Pr.196 (Output terminal function selection)** to assign the function.

◆ Retry count check (Pr.69)

- Reading the **Pr.69** value provides the cumulative number of successful restart times made by retries. The cumulative count in **Pr.69** increases by 1 when a retry is successful. Retry is regarded as successful when normal operation continues without a fault for the **Pr.68** setting multiplied by four or longer (3.1 s at the shortest). (When retry is successful, the cumulative number of retry failures is cleared.)
- Writing "0" in **Pr.69** clears the cumulative count.

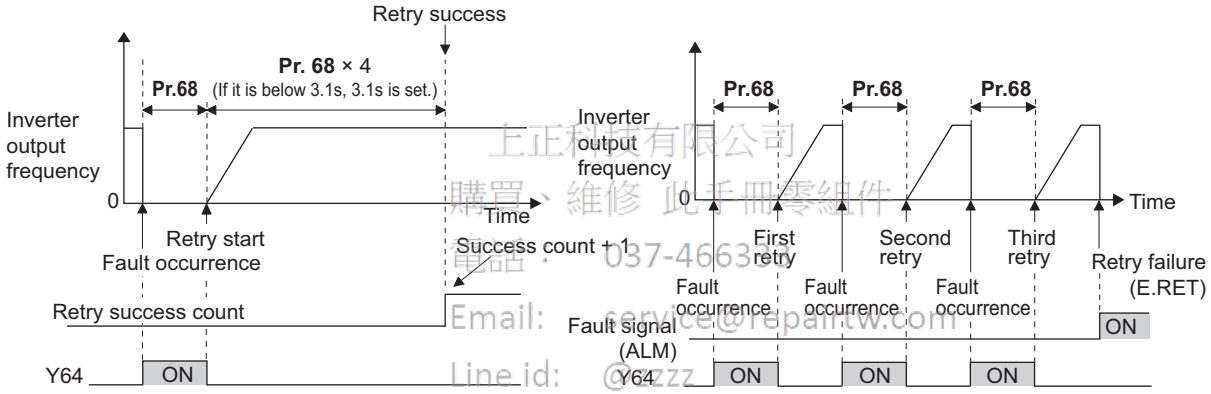

Retry success example Retry failure example

上正科技有限公司
購買、維修 此手冊零組件
電話： 037-46638
Email: service@repairtw.com
Line id: @zzz
www.repairtw.com

◆ Selecting retry generating faults (Pr.65)

- Using **Pr.65**, the fault that causes a retry is selectable. No retry is made for the fault not indicated. (For the fault details, refer to page 568.) ● indicates the faults selected for retry.

Retry-making fault	Pr.65 setting					
	0	1	2	3	4	5
E.OC1	●	●		●	●	●
E.OC2	●	●		●	●	
E.OC3	●	●		●	●	●
E.OV1	●		●	●	●	
E.OV2	●		●	●	●	
E.OV3	●		●	●	●	
E.THM	●					
E.THT	●					
E.IPF	●				●	
E.UVT	●				●	
E. BE	●				●	
E. GF	●				●	
E.OHT	●					
E.OLT	●				●	
E.OPT	●				●	

Retry-making fault	Pr.65 setting					
	0	1	2	3	4	5
E.OP1	●				●	
E. PE	●				●	
E.OS	●				●	
E.PTC	●					
E.CDO	●				●	
E.SER	●				●	
E.USB	●				●	
E.ILF	●				●	
E.PID	●				●	
E.PCH	●				●	
E.SOT	●	●		●	●	●
E.LCI	●				●	
E.LUP	●				●	
E.LDN	●				●	

NOTE

- Use the retry function only when the operation can be resumed after resetting a protective function activation. Making a retry against the protective function, which is activated by an unknown condition, will lead the inverter and motor to be faulty. Identify and remove the cause of the protective function activation before restarting the operation.
- If the retry function operates during PU operations, the operating conditions (forward/reverse rotation) are stored; and operations resume after retry reset.
- Only the fault details for the first fault that occurred during retry are stored in the fault history.
- The reset by the retry function does not clear the accumulated data of the electronic thermal O/L relay. (This is different from power supply reset or reset by RES signal.)
- When the parameter storage device fault (E.PE) is occurring and reading of the retry-function-related parameters is not possible, retry cannot operated.
- Changing the terminal assignment using **Pr.190 to Pr.196 (Output terminal function selection)** may affect the other functions. Set parameters after confirming the function of each terminal.

5

⚠CAUTION

- When the retry function is set enabled, stay away from the motor and machine in the case of an output shutoff. The motor and machine will start suddenly (after the reset time has elapsed) after the shutoff. When the retry function is selected, apply the supplied CAUTION stickers to easily visible places.

Parameters referred to

Pr.57 Restart coasting time ☞ page 446, page 451

5.7.8 Emergency drive

This function is used in case of emergency such as a fire to forcibly continue inverter operation to drive a motor without activating protective functions even if the inverter detects a fault. Using this function may cause damage of the motor or the inverter because driving the motor is given the highest priority. Use this function for emergency operation only. When the inverter is damaged by a fault, the motor operation can be continued by switching to the commercial power supply operation.

上正科技有限公司
購買、維修、工業零組件
電話： 087-16233
Email: service@repairtw.com
Line id: @zzzz
www.repairtw.com

The emergency drive function is available only for standard structure models and IP55 compatible models.

Pr.	Name	Initial value		Setting range	Description
		FM	CA		
523 **H320**[*1]	**Emergency drive mode selection**	9999		100, 111, 112, 121, 122, 123, 124, 200, 211, 212, 221, 222, 223, 224, 300, 311, 312, 321, 322, 323, 324, 400, 411, 412, 421, 422, 423, 424	Select the operation mode of the emergency drive.
				9999	Emergency drive disabled.
524 **H321**[*1*2]	**Emergency drive running speed**	9999		0 to 590 Hz[*3]	Set the running frequency in the fixed frequency mode of the emergency drive (when the fixed frequency mode is selected in **Pr.523**)
				0 to 100%[*3]	Set the PID set point in the PID control mode of the emergency drive (when the PID control mode is selected in **Pr.523**)
				9999[*3]	Emergency drive disabled.
515 **H322**[*1]	**Emergency drive dedicated retry count**	1		1 to 200	Set the retry count during emergency drive operation.
				9999	Without retry count excess (no restriction on the number of retries).
1013 **H323**[*1]	**Emergency drive running speed after retry reset**	60 Hz	50 Hz	0 to 590 Hz	Set the frequency for operation after a retry when any of E.CPU, E.1 to E.3, and E.5 to E.7 occurs during emergency drive operation.
514 **H324**[*1]	**Emergency drive dedicated waiting time**	9999		0.1 to 600 s	Set the retry waiting time during emergency drive operation.
				9999	The **Pr.68** setting is applied to the operation.
136 **A001**	**MC switchover interlock time**	1 s		0 to 100 s	Set the operation interlock time for MC2 and MC3.
139 **A004**	**Automatic switchover frequency from inverter to bypass operation**	9999		0 to 60 Hz	Set the frequency at which the inverter-driven operation is switched over to the commercial power supply operation when the condition for the electronic bypass is established during emergency drive operation.
				9999	Without automatic switchover
57 **A702**	**Restart coasting time**	9999		0	Coasting time differs according to the inverter capacity. (Refer to page 446.)
				0.1 to 30 s	Set the waiting time for the inverter to perform a restart after restoring power due to an instantaneous power failure.
				9999	No restart

*1 The setting is available for the standard structure model and the IP55 compatible model.
*2 Set **Pr.524** after setting **Pr.523**.
*3 When **Pr.523** = "100, 200, 300, or 400", the emergency drive is activated regardless of the **Pr.524** setting.

上正科技有限公司
購買、維修、此手冊零組件
電話：037-466333
Email: service@repairtw.com
Line id: @zzzz
www.repairtw.com

◆ Connection diagram

- A connection diagram of the emergency drive is as follows.

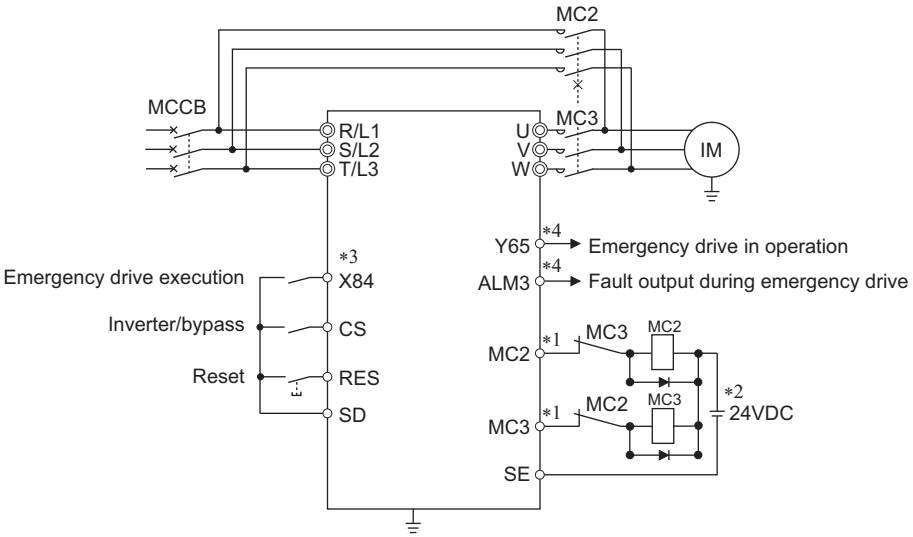

*1 Be careful of the capacity of the sequence output terminals.
The applied terminals differ by the settings of **Pr.190 to Pr.196 (Output terminal function selection)**.

Output terminal capacity	Output terminal permissible load
Open collector output of inverter (RUN, SU, IPF, OL, FU)	24 VDC 0.1 A
Inverter relay output (A1-C1, B1-C1, A2-B2, B2-C2) Relay output option (FR-A8AR)	230 VAC 0.3 A 30 VDC 0.3 A

上正科技有限公司
購買、維修 此手冊零組件
電話： 027-66333
email: service@repairtw.com
Line Id: @zzzz
www.repairtw.com

*2 When connecting a DC power supply, insert a protective diode.
When connecting an AC power supply, use the relay output option (FR-A8AR), and use contact outputs.
Connect (FR-A8AR) and use contact outputs.
*3 The applied terminals differ by the settings of **Pr.180 to Pr.189 (Input terminal function selection)**
*4 The applied terminals differ by the settings of **Pr.190 to Pr.196 (Output terminal function selection)**.

NOTE

- Be sure to provide a mechanical interlock for MC2 and MC3.

◆ Emergency drive execution sequence

Point

- When the X84 signal is ON for 3 seconds, the emergency drive is activated.
- The Y65 signal turns ON during emergency drive operation.
- "ED" appears on the operation panel during emergency drive operation.
- The ALM3 signal turns ON when a fault occurs during emergency drive operation.

- Operation of the emergency drive function (when the switchover to the commercial power supply during emergency drive is disabled, and the retry in case of critical faults is selected)

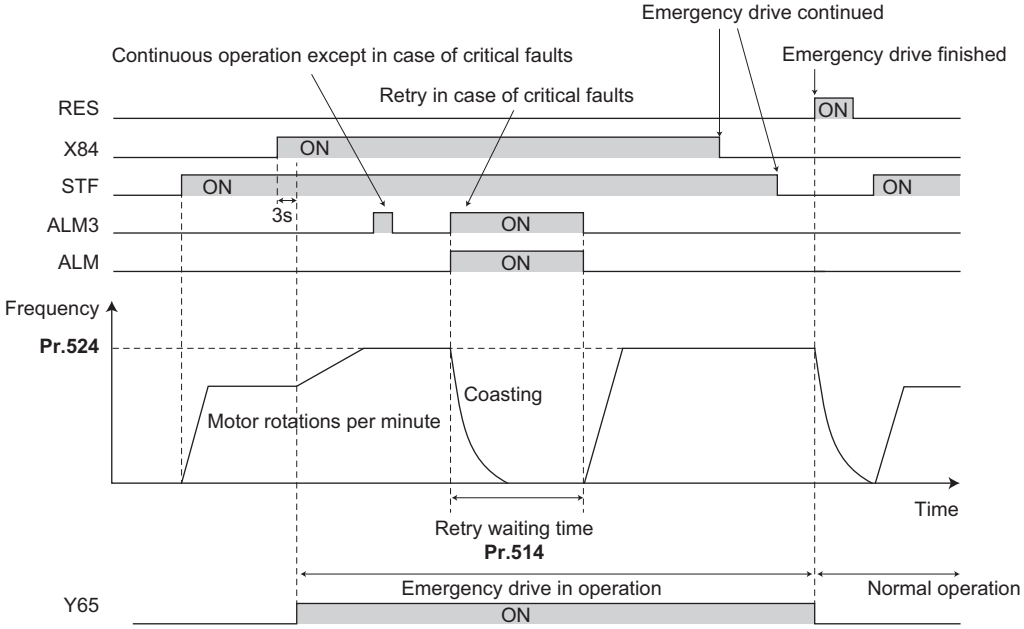

- When the electronic bypass during emergency drive is activated (CS signal is turned ON) (when the switchover to the commercial power supply during emergency drive is enabled)

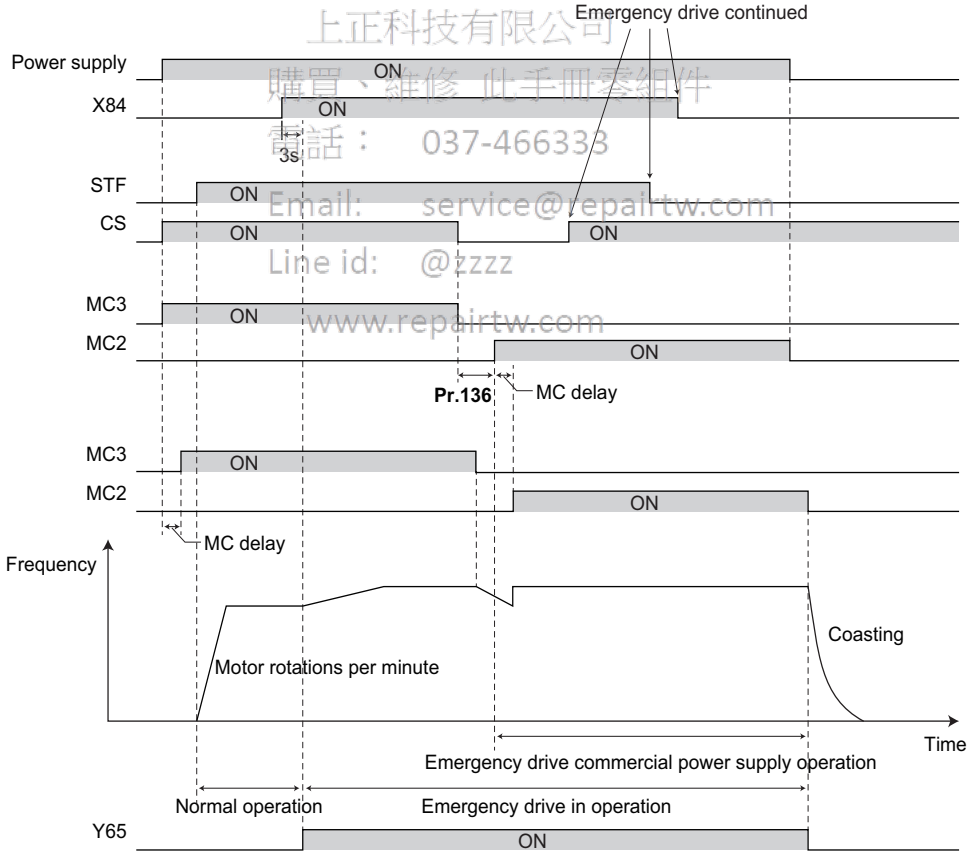

上正科技有限公司
購買、維修 此手冊零組件
電話： 037-466333
Email: service@repairtw.com
Line id: @zzzz
www.repairtw.com

◆ Emergency drive operation selection (Pr.523, Pr.524)

- Use **Pr.523 Emergency drive mode selection** to select the emergency drive operation. Set a value in the hundreds place to select the operation when a valid protective function is activated (critical fault) during emergency drive. Set values in the ones and tens places to select the operation method.

Pr.523 setting	Emergency drive operation mode		Description
1[][]	Output shutoff mode		Output shutoff at a critical fault occurrence.
2[][]	Retry / output shutoff mode		Retry operation at a critical fault occurrence. (Output shutoff at the occurrence of a fault for which retry is not permitted.) The output is shut off when a critical fault for which retry is not permitted occurs, or the retry count is exceeded.
3[][]*1	Retry / commercial mode		Retry operation at a critical fault occurrence. (Electronic bypass at the occurrence of a critical fault for which retry is not permitted.) The operation is switched over to the commercial power supply operation when a critical fault for which retry is not permitted occurs, or the retry count is exceeded. While **Pr.515** = "9999", the operation is switched over to the commercial power supply operation when the retry count reaches 200.
4[][]*1	Commercial mode		The operation is switched over to the commercial power supply operation when a critical fault occurs.
[]00	Normal operation		The operation is performed with the same set frequency and by the same starting command as those in the normal operation. Use this mode to avoid output shutoff due to a fault.
[]11	Fixed frequency mode	Forward rotation	The operation is forcibly performed with the frequency set in **Pr.524**. Even when the motor is stopped, the operation is started by the emergency drive operation.
[]12		Reverse rotation	
[]21	PID control mode	Forward rotation	The operation is performed under PID control using the **Pr.524** setting as a set point. The measured values are input in the method set in **Pr.128**.
[]22		Reverse rotation	
[]23		Forward rotation (Second PID measured value input)	The operation is performed under PID control using the **Pr.524** setting as a set point. The measured values are input in the method set in **Pr.753**.
[]24		Reverse rotation (Second PID measured value input)	
9999	Emergency drive disabled.		

*1 Under PM motor control, the operation is not switched over to the commercial power supply operation the output is shut off.

上揚科技有限公司
購買、維修、此手冊零組件
電話: 037-466332
Email: service@repairtw.com
Line id: @zzzz
www.repairtw.com

◆ Retry operation during emergency drive (Pr.515, Pr.514)

- Set the retry operation during emergency drive operation. Use **Pr.515 Emergency drive dedicated retry count** to set the retry count, and use **Pr514 Emergency drive dedicated waiting time** to set the retry waiting time.
- The ALM signal output conditions depend on the **Pr.67 Number of retries at fault occurrence** setting. (Refer to page 261.)
- For the protective functions (critical faults) for which a retry is performed during emergency drive operation, refer to page 269.

NOTE

- During emergency drive operation, **Pr.65 Retry selection** is not available.

◆ Electronic bypass during emergency drive (Pr.136, Pr.139, Pr.57)

- For selecting the commercial mode (**Pr.523** = "3[][], 4[][]"), setting is required as follows.
  Set **Pr.136 MC switchover interlock time** and **Pr.139 Automatic switchover frequency from inverter to bypass operation** and assign MC2 and MC3 signals to output terminals.
  When CS signal is assigned to an input terminal, set **Pr.57 Restart coasting time** ≠ "9999" and turn ON the CS signal. (In the initial setting, the CS signal is assigned to the terminal CS.)
  V/F control or Advanced magnetic flux vector control (Under PM motor control, the operation is not switched over to the commercial power supply operation the output is shut off.)

- During emergency drive operation, the operation is switched over to the commercial power supply operation when any of the following conditions is satisfied.
  CS signal turns OFF.
  A critical fault for which retry is not permitted occurs while **Pr.523** = "3[][]".
  A critical fault occurs while **Pr.523** = "4[][]".
- While the motor is driven by the inverter during emergency drive operation, if a condition for electronic bypass is satisfied, the output frequency is accelerated/decelerated to the **Pr.139** setting. When the frequency reaches the set frequency, the operation is switched over to the commercial power supply operation. (The operation is immediately switched over to the commercial power supply operation during output shutoff due to a critical fault occurrence.)
- If the parameter for electronic bypass is not set while the commercial mode is set (**Pr.523** = "3[][], 4[][]"), the operation is not switched over to the commercial power supply operation even when a condition for switchover is satisfied, and the output is shut off.
- To assign the MC2 and MC3 signals to output terminals, use any two of **Pr.190 to Pr.196 (Output terminal function selection)** and set "18 (positive logic)" for the MC2 signal and set "19 (positive logic)" for the MC3 signal.
- Operation of magnetic contactor (MC2, MC3)

Magnetic contactor	Installation location	Operation	
		During commercial power supply operation	During inverter operation
MC2	Between power supply and motor	Shorted	Open
MC3	Between inverter output side and motor	Open	Shorted

- The input signals are as shown below.

Signal	Function	Operation	MC operation*3	
			MC2	MC3
CS	Inverter/bypass	ON: Inverter operation	×	○
		OFF: Emergency drive commercial power supply operation*1	○	×
X84	Emergency drive operation	ON: Emergency drive operation	—	—
		OFF: Normal operation*2	×	○
RES	Operation status reset	ON: Reset	×	No change
		OFF: Normal operation	—	—

上禾科技有限公司
購買、維修、四手伺零組件
電話：07-7488383
Email: service@repairtw.com
Line id: @7777
www.repairtw.com

*1 If the signal is turned ON after switchover to the emergency drive commercial power supply operation, the operation will not be returned to the inverter-driven operation.
*2 If the signal is turned OFF during the emergency drive operation, the operation will not be returned to normal.
*3 MC operation is as shown below.

Notation	MC operation
○	ON
×	OFF
—	During inverter operation: MC2-OFF, MC3-ON During commercial power supply operation: MC2-ON, MC3-OFF
No change	The operation status before changing the signal state to ON or OFF is held.

NOTE

- During electronic bypass operation while the electronic bypass sequence is enabled (**Pr.135** = "1"), the emergency drive function is not available.

◆ PID control during emergency drive operation

- During emergency drive operation in the PID control mode, the operation is performed under PID control using the **Pr.524** setting as a set point. Input the measured values in the method set in **Pr.128** or **Pr.753**.

- When the PID control mode is selected for emergency drive, the PID action during emergency drive operation is as follows depending on the PID control setting.

Item	PID control action		
	Set point / measured value input setting	Deviation input setting	Without PID control setting
Measured value input selection	Held	Terminal 4 input	Terminal 4 input
Forward action / reverse action selection	Held	Held	Reverse action (initial setting)
Proportional band	Held	Held	100% (initial value)
Integral time	Held	Held	1 s (initial setting)
Differential time	Held	Held	Not used (initial setting)
Applied to the frequency / calculation only	Applied to the frequency	Applied to the frequency	Applied to the frequency
Other PID-related settings	Held	Held	Held

- While the "retry" (**Pr.523** = "22[], 32[]") is selected in the PID control mode, if a retry occurs at an occurrence of E.CPU, E.1 to E.3, or E.5 to E.7 during emergency drive operation, the operation is performed not under PID control but with the fixed frequency.
  Use **Pr.1013 Emergency drive running speed after retry reset** to set the fixed frequency.

NOTE

- Refer to page 401 for details of PID control.

◆ Operation of protective functions during emergency drive

- Operation of protective functions during emergency drive is as follows.

上元科技有限公司
購買、維修、備件零組件
電話: 03-466333
Email: service@repairtw.com
Line Id: @z222
www.repairtw.com

Protective function	Operation during emergency drive	Protective function	Operation during emergency drive	Protective function	Operation during emergency drive
E.OC1	Retry	E.OHT	Retry	E.CDO	Retry
E.OC2	Retry	E.PTC	Retry	E.IOH	Output shutoff
E.OC3	Retry	E.OPT	The function is disabled.	E.SER	The function is disabled.
E.OV1	Retry	E.OP1	The function is disabled.	E.AIE	The function is disabled.
E.OV2	Retry	E.OP2	The function is disabled.	E.USB	The function is disabled.
E.OV3	Retry	E.OP3	The function is disabled.	E.SAF	Retry*1
E.THT	Retry	E.16	The function is disabled.	E.PBT	Retry*1
E.THM	Retry	E.17	The function is disabled.	E.OS	The function is disabled.
E.FIN	Retry	E.18	The function is disabled.	E.LCI	The function is disabled.
E.IPF	The function is disabled.	E.19	The function is disabled.	E.PCH	The function is disabled.
E.UVT	The function is disabled.	E.20	The function is disabled.	E.PID	The function is disabled.
E.ILF	The function is disabled.	E.PE	Output shutoff	E.1	Retry
E.OLT	Retry	E.PUE	The function is disabled.	E.2	Retry
E.SOT	Retry	E.RET	Output shutoff	E.3	Retry
E.LUP	The function is disabled.	E.PE2	Output shutoff	E.5	Retry
E.LDN	The function is disabled.	E.CPU	Retry	E.6	Retry*1
E.BE	Retry*1	E.CTE	The function is disabled.	E.7	Retry*1
E.GF	Retry	E.P24	The function is disabled.	E.13	Retry*1
E.LF	The function is disabled.				

*1 While the switchover to the commercial power supply operation during emergency drive operation is enabled, when the same protective function is activated twice consecutively, the retry is attempted up to twice.

- The fault output during emergency drive operation is as follows.

Signal	Pr.190 to Pr.196 setting		Description
	Positive logic	Negative logic	
ALM	99	199	Turns ON at the occurrence of a fault that causes the above-mentioned "retry" or "output shutoff" during emergency drive operation.
ALM3	66	166	Outputted when a fault occurs during emergency drive operation. During emergency drive operation, if a fault that does not activate any protective function occurs, the signal turns ON for 3 s and then turns OFF.

◆ Input signal operation

- During emergency drive operation in the fixed frequency mode or in the PID control mode, input signals unrelated to the emergency drive become invalid with some exceptions.
- The following table shows functions of the signals that do not become invalid during emergency drive operation in the fixed frequency mode or in the PID control mode.

Input signal status	Fixed frequency mode	PID control mode
Valid	OH, TRG, TRC, X51, RES, X70, X71	OH, TRG, TRC, X51, RES, X70, X71
Held	RT, X18, SQ, X84	RT, X18, SQ, X64, X65, X66, X67, X79, X84
Always-ON	—	X14, X77, X78, X80

◆ Emergency drive status monitor

- Set "68" in **Pr.52, Pr.774 to Pr.776, Pr.992** to monitor the status of the emergency drive on the operation panel.
- Description of the status monitor

Operation panel indication	Description		
	Emergency drive setting	Emergency drive operating status	
0	Emergency drive function setting is not available.	—	
1	Electronic bypass during emergency drive operation is disabled.	During normal operation	
2		Emergency drive in operation	Operating properly
3			A certain alarm is occurring.
4			A critical fault is occurring. The operation is being continued by the retry.
5			A critical fault is occurring. The continuous operation is not allowed due to output shutoff.
11	Electronic bypass during emergency drive operation is enabled.	During normal operation	
12		Emergency drive in operation	Operating properly
13			A certain alarm is occurring.
14			A critical fault is occurring. The operation is being continued by the retry.
15			A critical fault is occurring. The continuous operation is not allowed due to output shutoff.
2[][]*1		Electronic bypass is started during emergency drive (during acceleration/deceleration to the switchover frequency).	
3[][]*1		During electronic bypass during emergency drive (waiting during the interlock time).	
4[][]*1		During commercial power supply operation during emergency drive	

*1 The first digit remains the same as the previous numerical value (fault condition).

上正科技有限公司
購買、維修 此手冊零組件
電話： 037-466333
Email: service@repairtw.com
Line id: @zzzz
www.repairtw.com

NOTE

- When the "retry" (**Pr.523** = "2[][], 3[][]") is selected, it is recommended to use the automatic restart after instantaneous power failure function at the same time.
- Parameter setting is not available during emergency drive operation.
- To return to the normal operation during emergency drive operation, do the following.
  (The operation will not be returned to normal only by turning OFF the X84 signal.)
  Reset the inverter, or turn the power supply OFF.
  Clear a fault by turning ON the X51 signal while the sequence function is enabled (when the protective function is activated).
- The operation is switched over to the commercial power supply operation in case of the following during emergency drive operation.
  24 V external power supply operation, power failure status or operation with the power supplied through R1/S1, undervoltage
- While the electronic bypass sequence is set or when the operation is performed with the power supplied through R1/S1, when **Pr.30** = "2", the emergency drive function is disabled.

⚠CAUTION

- When the emergency drive operation is performed, the operation is continued or the retry is repeated even when a fault occurs, which may damage or burn the inverter and motor. Before restarting the normal operation after using this function, make sure that the inverter and motor have no fault. Any damage of the inverter or the motor caused by using the emergency drive function is not covered by the warranty even within the guarantee period.

5.7.9 Limiting the output frequency (maximum/minimum frequency)

Motor speed can be limited. Clamp the upper and lower limits of the output frequency.

Pr.	Name	Initial value	Setting range	Description
1 H400	**Maximum frequency**	120 Hz*1 60 Hz*2	0 to 120 Hz	Set the upper limit of the output frequency.
2 H401	**Minimum frequency**	0 Hz	0 to 120 Hz	Set the lower limit of the output frequency.
18 H402	**High speed maximum frequency**	120 Hz*1 60 Hz*2	0 to 590 Hz	Set when operating at 120 Hz or higher.

*1 For the FR-F820-02330(55K) or lower, and FR-F840-01160(55K) or lower.
*2 For the FR-F820-03160(75K) or higher, and FR-F840-01800(75K) or higher.

◆ Setting the maximum frequency (Pr.1, Pr.18)

- Set **Pr.1 Maximum frequency** to the upper limit of the output frequency. If the value of the frequency command given is higher than the setting, the output frequency is clamped at the maximum frequency.
- To operate at a frequency higher than the 120 Hz, adjust the upper output frequency limit with **Pr.18 High speed maximum frequency**. (When setting a frequency in **Pr.18**, the **Pr.1** setting automatically changes to the frequency set in **Pr.18**. Also, when setting a frequency in **Pr.1**, the **Pr.18** setting automatically changes to the frequency set in **Pr.1**.)

正仟科技有限公司
購買、維修、技術服務
電話： 037-466333
Email: service@repairtw.com
Line id: @zzzz
www.repairtw.com

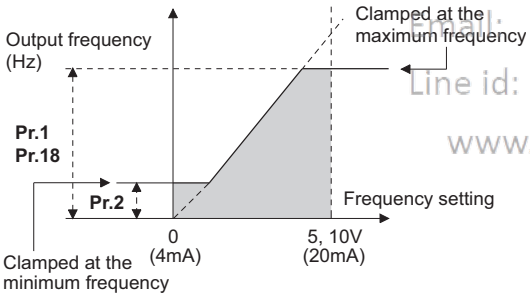

◆ Setting the minimum frequency (Pr.2)

- Set **Pr.2 Minimum frequency** to the lower limit of the output frequency.
- If the set frequency is **Pr.2** or less, the output frequency is clamped at **Pr.2** (does not fall below **Pr.2**).

NOTE

- To operate with a frequency higher than 60 Hz using frequency-setting analog signals, change the **Pr.125 (Pr.126) (frequency setting gain)** setting. Simply changing the **Pr.1 and Pr.18** settings does not enable the operation at a frequency higher than 60 Hz.
- Under PM motor control, the upper and lower limits are for the commanded frequency. The final output frequency that is decided by each control may exceed the lower or upper limits.
- When **Pr.15 Jog frequency** is equal to or less than **Pr.2**, the **Pr.15** setting takes precedence.
- If a jump frequency that exceeds **Pr.1 (Pr.18)** is set for the 3-point frequency jump, the maximum frequency setting is the set frequency. If the jump frequency is less than the setting of **Pr.2**, the jump frequency is the set frequency. (The set frequency can be equal to or less than the frequency lower limit.) When stall prevention is activated to decrease the output frequency, the output frequency may drop to **Pr.2** or below.

⚠CAUTION

- Note that when **Pr.2** is set to any value equal to or higher than **Pr.13 Starting frequency**, simply turning ON the start signal runs the motor at the frequency set in **Pr.2** even if the command frequency is not given.

Parameters referred to
Pr.13 Starting frequency ☞ page 225, page 226
Pr.15 Jog frequency ☞ page 248
Pr.125 Terminal 2 frequency setting gain frequency, Pr.126 Terminal 4 frequency setting gain frequency ☞ page 339

5.7.10 Avoiding machine resonance points (frequency jump)

When it is desired to avoid resonance attributable to the natural frequency of a mechanical system, these parameters allow resonant frequencies to be jumped.

Pr.	Name	Initial value	Setting range	Description
31 **H420**	**Frequency jump 1A**	9999	0 to 590 Hz, 9999	1A to 1B, 2A to 2B, 3A to 3B are frequency jumps (3-point jump) 9999: Function disabled
32 **H421**	**Frequency jump 1B**			
33 **H422**	**Frequency jump 2A**			
34 **H423**	**Frequency jump 2B**			
35 **H424**	**Frequency jump 3A**			
36 **H425**	**Frequency jump 3B**			
552 **H429**	**Frequency jump range**	9999	0 to 30 Hz	Set the jump range for the frequency jumps (6-point jump).
			9999	3-point jump

上正科技有限公司
購買、維修、此手冊零組件
電話：037-466333
Email: service@repairtw.com
Line id: @ltz
www.repairtw.com

◆ 3-point frequency jump (Pr.31 to Pr.36)

- Up to three areas may be set, with the jump frequencies set to either the top or bottom point of each area.
- The settings of frequency jumps 1A, 2A, 3A are jump points, and operation is performed at these frequencies in the jump areas.

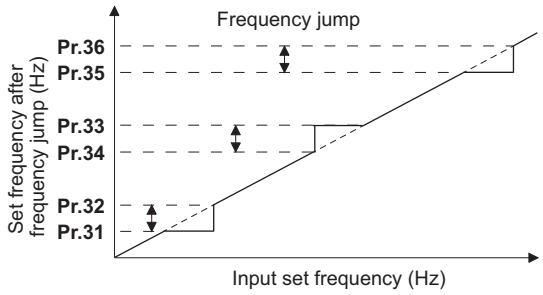

Example 1) To fix the frequency to 30 Hz in the range of 30 Hz to 35 Hz, set 35 Hz in **Pr.34** and 30 Hz in **Pr.33**.

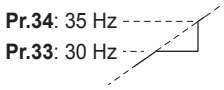

Example 2) To jump the frequency to 35 Hz in the range of 30 Hz to 35 Hz, set 35 Hz in **Pr.33** and 30 Hz in **Pr.34**.

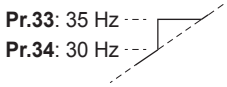

◆ 6-point frequency jump (Pr.552)

- A total of six jump areas can be set by setting the common jump range for the frequencies set in **Pr.31 to Pr.36**.

- When frequency jump ranges overlap, the lower limit of the lower jump range and the upper limit of the upper jump range are used.
- When the set frequency decreases and falls within the jump range, the upper limit of the jump range is the set frequency. When the set frequency increases and falls within the jump range, the lower limit of the jump range is the set frequency.

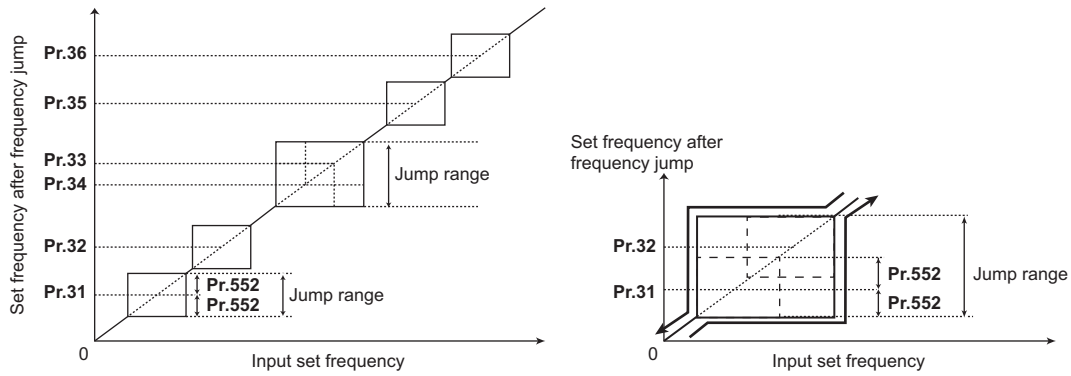

NOTE

- During acceleration/deceleration, the running frequency within the set area is valid.
- If the setting ranges of individual groups (1A and 1B, 2A and 2B, 3A and 3B) overlap, Parameter write error (Er1) occurs.
- Setting **Pr.552** = "0" disables frequency jumps.
- If a jump frequency that exceeds **Pr.1 (Pr.18) Maximum frequency** is set for the 3-point frequency jump, the maximum frequency setting is the set frequency. If the set frequency is less than the jump frequency **Pr.2 Minimum frequency**, the jump frequency is the set frequency. (The set frequency can be equal to or lower than the frequency lower limit.)
  Example with 6-point frequency jump

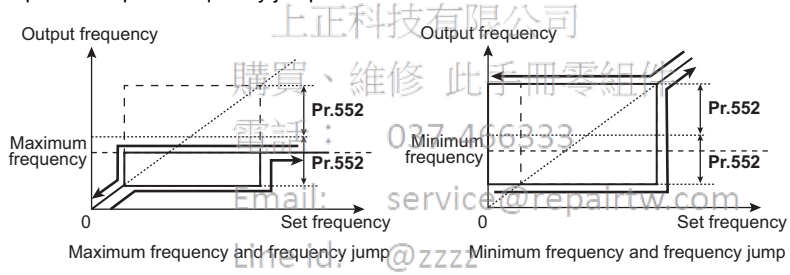

上正科技有限公司
購買、維修 此手冊零組件
電話： 037-466333
Email: service@repairtw.com
Line Id: @zzzz
www.repairtw.com

Parameters referred to

Pr.1 Maximum frequency, Pr.2 Minimum frequency, Pr.18 High speed maximum frequency ☞ page 271

5.7.11 Stall prevention operation

This function monitors the output current and automatically changes the output frequency to prevent the inverter from shutting off due to overcurrent, overvoltage, etc. It can also limit the stall prevention and fast-response current limit operation during acceleration/deceleration and power/regenerative driving.

- Stall prevention
  If the output current exceeds the stall prevention operation level, the output frequency of the inverter is automatically changed to reduce the output current.
  Also, the second stall prevention function can limit the output frequency range in which the stall prevention function is enabled.
- Fast-response current limit
  If the current exceeds the limit value, the output of the inverter is shut off to prevent an overcurrent.

Pr.	Name	Initial value FM	Initial value CA	Setting range	Description	
22 **H500**	**Stall prevention operation level**	120%	110%	0	Stall prevention operation disabled.	
				0.1 to 400%[*1]	Set the current limit at which the stall prevention operation starts.	
156 **H501**	**Stall prevention operation selection**	0		0 to 31, 100, 101	Enable/disable the stall prevention operation and the fast-response current limit operation.	
48 **H600** V/F Magnetic flux	**Second stall prevention operation level**	120%	110%	0	Second stall prevention operation disabled.	
				0.1 to 400%[*1]	The stall prevention operation level can be changed using the RT signal.	
49 **H601** V/F Magnetic flux	**Second stall prevention operation frequency**	0 Hz		0	Second stall prevention operation disabled.	
				0.01 to 590 Hz	Set the frequency at which the **Pr.48** stall prevention operation starts.	
				9999	**Pr.48** is enabled when the RT signal is ON.	
23 **H610** V/F Magnetic flux	**Stall prevention operation level compensation factor at double speed**	9999		0 to 200%	The stall operation level when running at high speeds above the rated frequency can be reduced.	
				9999	Stall prevention operation disabled at double speed.	
66 **H611** V/F Magnetic flux	**Stall prevention operation reduction starting frequency**	60 Hz	50 Hz	0 to 590 Hz	Set the frequency at which the stall operation level reduction starts.	
148 **H620** V/F Magnetic flux	**Stall prevention level at 0 V input**	120%	110%	0 to 400%[*1]	The stall prevention operation level can be changed by the analog signal input to the terminal 1 (terminal 4).	
149 **H621** V/F Magnetic flux	**Stall prevention level at 10 V input**	150%	120%	0 to 400%[*1]		
154 **H631** V/F Magnetic flux	**Voltage reduction selection during stall prevention operation**	1		0	Output voltage reduction enabled	Enable/disable the output voltage reduction during stall prevention operation.
				1	Output voltage reduction disabled.	
				10	Output voltage reduction enabled	Use this setting when the overvoltage protective function (E.OV[]) is activated during stall prevention operation in an application with large load inertia.
				11	Output voltage reduction disabled.	
157 **M430**	**OL signal output timer**	0 s		0 to 25 s	Set the OL signal output start time when stall prevention is activated.	
				9999	No OL signal output.	
858 **T040**	**Terminal 4 function assignment**	0		0, 4, 9999	When set "4", the stall prevention level can be changed with the signal to the terminal 4.	
868 **T010**	**Terminal 1 function assignment**	0		0, 4, 9999	When set "4", the stall prevention level can be changed with the signal to the terminal 1.	
874 **H730** PM	**OLT level setting**	120%	110%	0 to 400%	The inverter can be set to trip at activation of stall prevention and stalling of the motor. Set the output to be shut off.	

*1 The upper limit of stall prevention operation is limited internally to the following.
120% (SLD rating), 150% (LD rating)

上正科技有限公司
購買、維修 此手冊零組件
電話： 037-466333
Email: service@repairtw.com
Line id: @zzzz
www.repairtw.com

◆ Setting of stall prevention operation level (Pr.22)

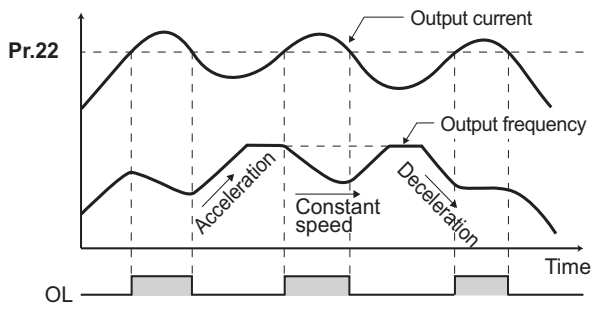

Stall prevention operation example

- For **Pr.22 Stall prevention operation level**, set the ratio of the output current to the inverter's rated current at which the stall prevention operation is activated. Normally, use this parameter in the initial setting.
- Stall prevention operation stops acceleration (makes deceleration) during acceleration, makes deceleration during constant speed, and stops deceleration during deceleration.
- When the stall prevention operation is performed, the Overload warning (OL) signal is output.

NOTE

- A continuous overloaded condition may activate a protective function such as motor overload trip (electronic thermal O/L relay function) (E.THM).
- When **Pr.156** has been set to activate the fast response current limit (initial value), the **Pr.22** setting should not be higher than 140%. Such setting prevents torque generation.
- Under PM motor control, the stall prevention operation level is reduced inversely proportional to the output frequency in the constant output range of the rated motor frequency or higher.

上正科技有限公司
購買、維修 此手冊零組件
電話： 037-466333
Email: service@repairtw.com
Line id: @zzzz
www.repairtw.com

◆ Disabling the stall prevention operation and fast-response current limit according to operating conditions (Pr.156)

- Referring to the following table, enable/disable the stall prevention operation and the fast-response current limit operation, and also set the operation at OL signal output.

Pr.156 setting		Fast-response current limit ○: enabled ●: disabled	Stall prevention operation selection ○: enabled ●: disabled			OL signal output ○: enabled ●: disabled[*1]
			Acceleration	Constant speed	Deceleration	
0 (initial value)		○	○	○	○	○
1		●	○	○	○	○
2		○	●	○	○	○
3		●	●	○	○	○
4		○	○	●	○	○
5		●	○	●	○	○
6		○	●	●	○	○
7		●	●	●	○	○
8		○	○	○	●	○
9		●	○	○	●	○
10		○	●	○	●	○
11		●	●	○	●	○
12		○	○	●	●	○
13		●	○	●	●	○
14		○	●	●	●	○
15		●	●	●	●	—[*2]
16		○	○	○	○	●
17		●	○	○	○	●
18		○	●	○	○	●
19		●	●	○	○	●
20		○	○	●	○	●
21		●	○	●	○	●
22		○	●	●	○	●
23		●	●	●	○	●
24		○	○	○	●	●
25		●	○	○	●	●
26		○	●	○	●	●
27		●	●	○	●	●
28		○	○	●	●	●
29		●	○	●	●	●
30		○	●	●	●	●
31		●	●	●	●	—[*2]
100[*3]	Power driving	○	○	○	○	○
	Regenerative driving	●	●	●	●	—[*2]
101[*3]	Power driving	●	○	○	○	○
	Regenerative driving	●	●	●	●	—[*2]

上正科技有限公司
購買、維修 此手冊零組件
電話： 037-466333
Email: service@repairtw.com
Line id: @zzzz
www.repairtw.com

*1 When "operation stop at OL signal output" is selected, the fault output " E. OLT " (stop due to stall prevention) is displayed, and operation stops.

*2 The OL signal and E.OLT are not outputted because fast-response current limit and stall prevention are not operating.

*3 Setting values "100, 101" can be individually set for power driving and regenerative driving. The setting value "101" disables the fast-response current limit during power driving.

NOTE

- When the load is heavy or the acceleration/deceleration time is short, stall prevention operates and acceleration/deceleration may not be performed according to the time set. Set the **Pr.156** and stall prevention operation level to the optimum values.
- For lift applications, make settings to disable the fast-response current limit. Otherwise, the torque may be insufficient, causing the load to drop.

◆ Adjusting the stall prevention operation signal and output timing (OL signal, Pr.157)

- If the output current exceeds the stall prevention operation level and stall prevention is activated, Overload warning (OL) signal turns ON for 100 ms or more. The output signal turns OFF when the output current falls to the stall prevention operation level or less.
- **Pr.157 OL signal output timer** can be used to set whether to output the OL signal immediately, or whether to output it after a certain time period has elapsed.
- This function also operates during regeneration avoidance operation " oL " (overvoltage stall).

Pr.157 setting	Description
0 (initial value)	Output immediately.
0.1 to 25	Output after the set time (s).
9999	Not output.

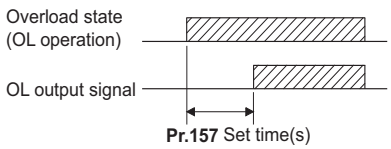

NOTE

- OL signal is assigned to the terminal OL in the initial status. The OL signal can be assigned to other terminals by setting "3(positive logic) or 103 (negative logic)" in any of **Pr.190 to Pr.196 (Output terminal function selection)**.
- If the stall prevention operation has lowered the output frequency to 0.5 Hz and kept the level for 3 s, the stall prevention stop (E.OLT) is activated to shut off the inverter output.
- Changing the terminal assignment using **Pr.190 to Pr.196 (Output terminal function selection)** may affect the other functions. Set parameters after confirming the function of each terminal.

上止科技有限公司
購買、維修 此手冊零組件
電話： 037-466333
Email: service@repairtw.com
Line id: @zzzz
www.repairtw.com

◆ Setting for stall prevention operation in the high-frequency range (Pr.22, Pr.23, Pr.66) V/F Magnetic flux

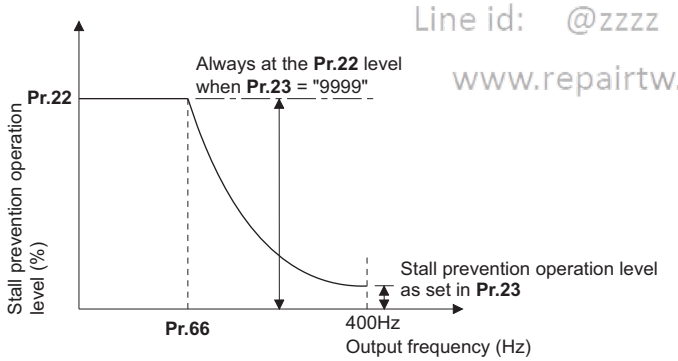

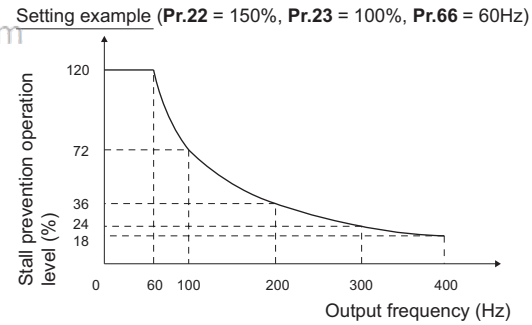

- When operating at the rated motor frequency or higher, acceleration may not be made because the motor current does not increase. Also, when operating in the high-frequency range, the current flowing to the locked motor becomes less than the rated output current of the inverter; and even if the motor is stopped, the protective function does not operate (OL). In a case like this, the stall prevention level can be reduced in the high-frequency range to improve the motor's operating characteristics. This is useful when operating up to the high speed range, such as when using a centrifuge. Normally, set **Pr.66 Stall prevention operation reduction starting frequency** to 60 Hz, and **Pr.23 Stall prevention operation level compensation factor at double speed** to 100%.
- Calculation formula for stall prevention operation level

$$\text{Stall prevention operation level (\%) in the high-frequency range} = A + B \times \left[\frac{\textbf{Pr.22} - A}{\textbf{Pr.22} - B}\right] \times \left[\frac{\textbf{Pr.23} - 100}{100}\right]$$

$$\text{Where,}\quad A = \frac{\textbf{Pr.66}\ (\text{Hz}) \times \textbf{Pr.22}\ (\%)}{\text{Output frequency (Hz)}},\quad B = \frac{\textbf{Pr.66}\ (\text{Hz}) \times \textbf{Pr.22}\ (\%)}{400\ \text{Hz}}$$

- When **Pr.23** = "9999" (initial value), the stall prevention operation level is constant at the **Pr.22** level up to 590 Hz.

◆ Setting multiple stall prevention operation levels (Pr.48, Pr.49) V/F Magnetic flux

- Setting **Pr.49 Second stall prevention operation frequency** = "9999" and turning ON the RT signal enables **Pr.48 Second stall prevention operation level**.
- For **Pr.48**, set the stall prevention operation level that is effective in the output frequency range between 0 Hz and **Pr.49**. However, the operation level is **Pr.22** during acceleration.
- Stop-on-contact operation can be used by decreasing the **Pr.48** setting and loosening the reduction torque.

Pr.49 setting	Operation
0 (initial value)	The second stall prevention function disabled.
0.01 Hz to 590 Hz	The second stall prevention function operates according to the frequency.*1
9999*2	The second stall prevention function operates according to the RT signal. RT signal ON: stall level set in **Pr.48** RT signal OFF: stall level set in **Pr.22**

*1 For the stall prevention operation level, the smaller of **Pr.22** and **Pr.48** has precedence.

*2 **When Pr.858** = "4" (analog input to terminal 4 for stall prevention operation level) or **Pr.868** = "4" (analog input to terminal 1 for stall prevention operation level), turning ON the RT signal does not enable the second stall prevention function. (Input to the terminal 4 or terminal 1 is valid.)

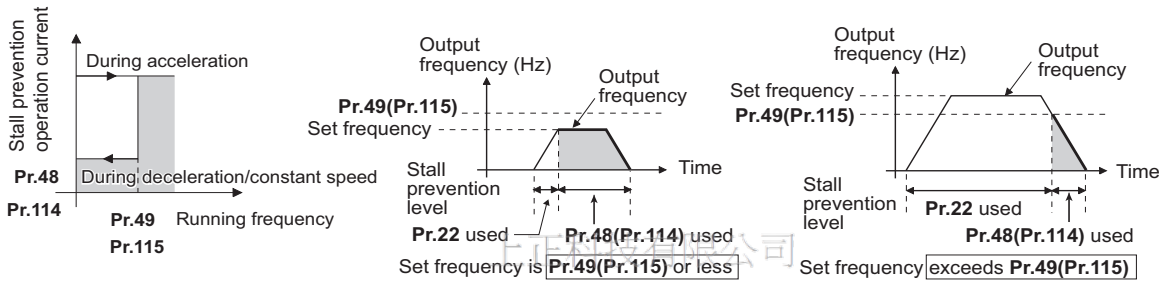

上順科學有限公司
購買、維修 此手冊零組件
電話： 227 466833
Email: service@repairtw.com
Line id: @3777
www.repairtw.com

NOTE

- When **Pr.49** ≠ "9999" (level change according to frequency) and **Pr.48** = 0%, the stall prevention function is disabled at or lower than the frequency set in **Pr.49**.
- The RT signal is assigned to the terminal RT in the initial status. Set "3" in one of **Pr.178 to Pr.189 (Input terminal function selection)** to assign the RT signal to another terminal.
- Changing the terminal assignment using **Pr.178 to Pr.189 (Input terminal function selection)** may affect the other functions. Set parameters after confirming the function of each terminal.
- The RT signal is the Second function selection signal. The RT signal also enables other second functions. (Refer to page 358.)

◆ Stall prevention operation level setting (analog variable) from terminal 1 (terminal 4) (Pr.148, Pr.149, Pr.858, Pr.868) V/F Magnetic flux

- To use the terminal 1 (analog voltage input) to set the stall prevention operation level, set **Pr.868 Terminal 1 function assignment** = "4". Then, input a 0 to 5 V (or 0 to 10 V) to the terminal 1. To choose whether 5 V or 10 V, use **Pr.73 Analog input selection**. In the initial status, **Pr.73** = "1 (initial value)" is set to choose 0 to ±10 V input.
- When setting the stall prevention operation level from terminal 4 (analog current input), set **Pr.858 Terminal 4 function assignment** = "4". Input a 0 to 20 mA to the terminal 4. There is no need to turn ON the AU signal.
- Set **Pr.148 Stall prevention level at 0 V input** to the current limit level when input voltage is 0 V (0 mA).

- Set **Pr.149 Stall prevention level at 0 V input** to the current limit level when input voltage is 10 V/5 V (20 mA).

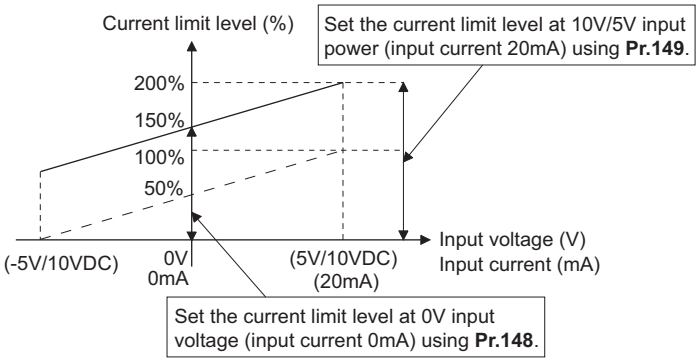

Pr.858 setting	Pr.868 setting	V/F, Advanced magnetic flux vector control	
		Terminal 4 function	Terminal 1 function
0 (initial value)	0 (initial value)	Frequency command (AU signal-ON)	Auxiliary frequency
	4 *1		Stall prevention
	9999		—
4 *2	0 (initial value)	Stall prevention	Auxiliary frequency
	4 *1	— *3	Stall prevention
	9999	Stall prevention	—
9999	—	—	—

*1 When **Pr.868** ≠ "4" (analog stall prevention), the other functions of terminal 1 (auxiliary input, override function, PID control) do not operate.
*2 When **Pr.858** = "4" (analog stall prevention), PID control and speed commands via terminal 4 do not operate even when the AU signal is ON.
*3 When both **Pr.858** and **Pr.868** are set to "4" (stall prevention), terminal 1 functions take priority and terminal 4 has no function.

NOTE

- The fast-response current limit cannot be set.
- To change the stall prevention operation level with the analog signal under PM motor control, set **C16 to C19** or **C38 to C41** to calibrate terminal 1 or terminal 4. (Refer to page 344.)

上正科技有限公司
購買、維修、此手冊零組件
電話：037-465333
Email: service@repairtw.com
Line id: @zzzz
www.repairtw.com

◆ Further prevention of a trip (Pr.154) V/F Magnetic flux

- **Pr.154 Voltage reduction selection during stall prevention operation** = "0, 10", the output voltage is reduced during stall prevention operation. By making this setting, an overcurrent trip becomes less likely to occur. Use this setting when torque reduction does not pose a problem. (Under V/F control, the output voltage is reduced only during the stall prevention operation is activated.)
- Set **Pr.154** = "10 or 11" when the overvoltage protective function (E.OV[]) is activated during stall prevention operation in an application with large load inertia. Note that turning OFF the start signal (STF/STR) or varying the frequency command during stall prevention operation may delay the acceleration/deceleration start.

Pr.154	E.OC[] countermeasure	E.OV[] countermeasure
0	Enabled	—
1 (initial value)	—	—
10	Enabled	Enabled
11	—	Enabled

◆ Trip during stall prevention operation (Pr.874) PM

- The inverter can be set to trip at activation of stall prevention and stalling of the motor.

- When a high load is applied and the stall prevention is activated, the motor stalls. At this time, if a state where the motor rotation speed is lower than 1.5 Hz and the output torque exceeds the level set in **Pr.874 OLT level setting** continues for 3 seconds, the stall prevention stop (E.OLT) is activated and the inverter output is shut off.

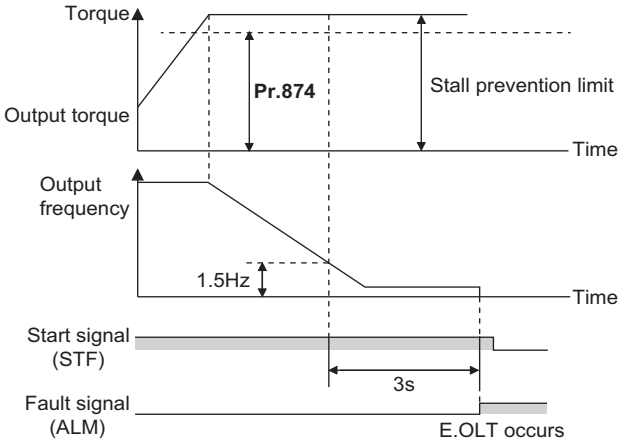

NOTE

- Under V/F control or Advanced magnetic flux vector control, if the output frequency drops to 0.5 Hz due to the stall prevention operation and this state continues for 3 seconds, a fault indication (E.OLT) appears, and the inverter output is shut off. This operation is activated regardless of the **Pr.874** setting.

⚠ CAUTION

- Do not set the stall prevention operation current too low.
  Doing so will reduce the generated torque.
- Be sure to perform the test operation.
  Stall prevention operation during acceleration may extend the acceleration time.
  Stall prevention operation during constant-speed operation may cause sudden speed changes.
  Stall prevention operation during deceleration may extend the deceleration time.

上正科技有限公司
購買、維修 此手冊零組件
電話： 037-466333
E-mail: service@repairtw.com
Line id: @zzzz
www.repairtw.com

Parameters referred to

Pr.73 Analog input selection ☞ page 330
Pr.178 to Pr.189 (Input terminal function selection) ☞ page 355
Pr.190 to Pr.196 (Output terminal function selection) ☞ page 312
Pr.858 Terminal 4 function assignment, Pr.868 Terminal 1 function assignment ☞ page 334

5.7.12 Load characteristics fault detection

This function is used to monitor whether the load is operating in normal condition by storing the speed/torque relationship in the inverter to detect mechanical faults or for maintenance. When the load operating condition deviates from the normal range, the protective function is activated or the warning is output to protect the inverter or the motor.

Pr.	Name	Initial value		Setting range	Description
		FM	CA		
1480 H520	**Load characteristics measurement mode**	0		0	Load characteristics measurement is normally completed.
				1	Load characteristics measurement mode is started.
				2, 3, 4, 5, 81, 82, 83, 84, 85	The load characteristics measurement status is displayed. (Read-only)
1481 H521	**Load characteristics load reference 1**	9999		0 to 400%	Set the reference value of normal load characteristics. 8888: The present load status is written as reference status. 9999: The load reference is invalid.
1482 H522	**Load characteristics load reference 2**	9999			
1483 H523	**Load characteristics load reference 3**	9999			
1484 H524	**Load characteristics load reference 4**	9999			
1485 H525	**Load characteristics load reference 5**	9999			
1486 H526	**Load characteristics maximum frequency**	60 Hz	50 Hz	0 to 590 Hz	Set the maximum frequency of the load characteristics fault detection range.
1487 H527	**Load characteristics minimum frequency**	6 Hz		0 to 590 Hz	Set the minimum frequency of the load characteristics fault detection range.
1488 H531	**Upper limit warning detection width**	20%		0 to 400%	Set the detection width when the upper limit load fault warning is output.
				9999	Function disabled
1489 H532	**Lower limit warning detection width**	20%		0 to 400%	Set the detection width when the lower limit load fault warning is output.
				9999	Function disabled
1490 H533	**Upper limit fault detection width**	9999		0 to 400%	Set the detection width when output is shut off when the upper limit load fault occurs.
				9999	Function disabled
1491 H534	**Lower limit fault detection width**	9999		0 to 400%	Set the detection width when output is shut off when the lower limit load fault occurs.
				9999	Function disabled
1492 H535	**Load status detection signal delay time / load reference measurement waiting time**	1 s		0 to 60 s	Set the waiting time after the load fault is detected until warning output or output shutoff. In the load characteristics measurement mode, set the waiting time after the load measurement frequency is reached until the load reference is set.

上正科技有限公司
購買、維修、此上所售商品
電話：887-466333
Email: service@repairtw.com
Line id: @zzzz
www.repairtw.com

◆ Load characteristics setting (Pr.1481 to Pr.1487)

- Use **Pr.1481 to Pr.1485** to set the reference value of load characteristics.

- Use **Pr.1486 Load characteristics maximum frequency** and **Pr.1487 Load characteristics minimum frequency** to set the output frequency range for load fault detection.

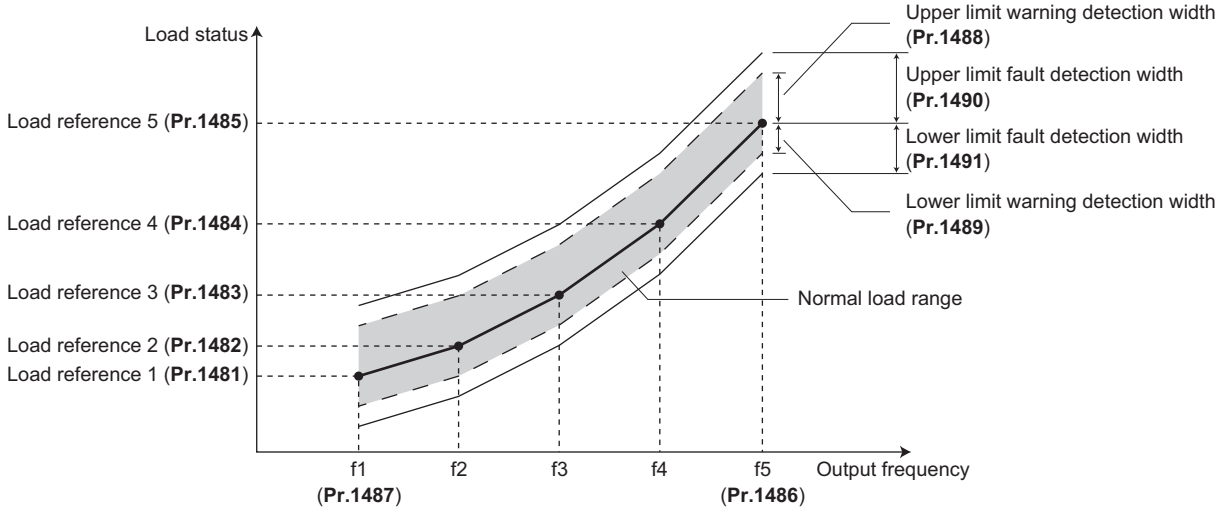

◆ Automatic measurement of the load characteristics reference (Load characteristics measurement mode) (Pr.1480)

Point

- Perform measurement under actual environment with the motor connected.
- Set the **Pr.1487 Load characteristics minimum frequency** higher than the **Pr.13 Starting frequency**.

上正科技有限公司
購買、維修 此手冊零組件
電話： 037-466333
Email: service@repairtw.com
Line id: @zzz
www.repairtw.com

- Setting **Pr.1480 Load characteristics measurement mode** = "1" enables automatic measurement of the load characteristics reference. (Load characteristics measurement mode)
- Use **Pr.1486** and **Pr.1487** to set the frequency band for the measurement, and set **Pr.1480** = "1". After setting, when the inverter is started, the measurement starts.
- The automatically measured load characteristics reference is written in **Pr.1481 to Pr.1485**.
- After the measurement is started, read **Pr.1480** to display the status of the measurement. If "8" appears in the tens place, the measurement has not properly completed.

Read value of Pr.1480		Status
Tens place	Ones place	
—	1	During measurement from the starting point to Point 1
—	2	During measurement from Point 1 to Point 2
—	3	During measurement from Point 2 to Point 3
—	4	During measurement from Point 3 to Point 4
—	5	During measurement from Point 4 to Point 5
—	0	Normal completion
8	1 to 5	Termination of measurement by an activation of a protective function, Inverter reset, turning ON of MRS signal, turning OFF of the start command, or timeout. (The value in the ones place represents the above-mentioned measurement point.)

- While measuring automatically, the During load characteristics measurement (Y213) signal is output. For the Y213 signal, assign the function by setting "213 (positive logic)" or "313 (negative logic)" in any of in any of **Pr.190 to Pr.196 (Output terminal function selection)**.

- Setting "8888" in **Pr.1481 to Pr.1485** enables fine adjustment of load characteristics. When setting **Pr.1481 to Pr.1485** = "8888" during operation, the load status at that point is set in the parameter. (Only when the set frequency is within ±2 Hz of the frequency of the measurement point, and SU signal is in the ON state.)

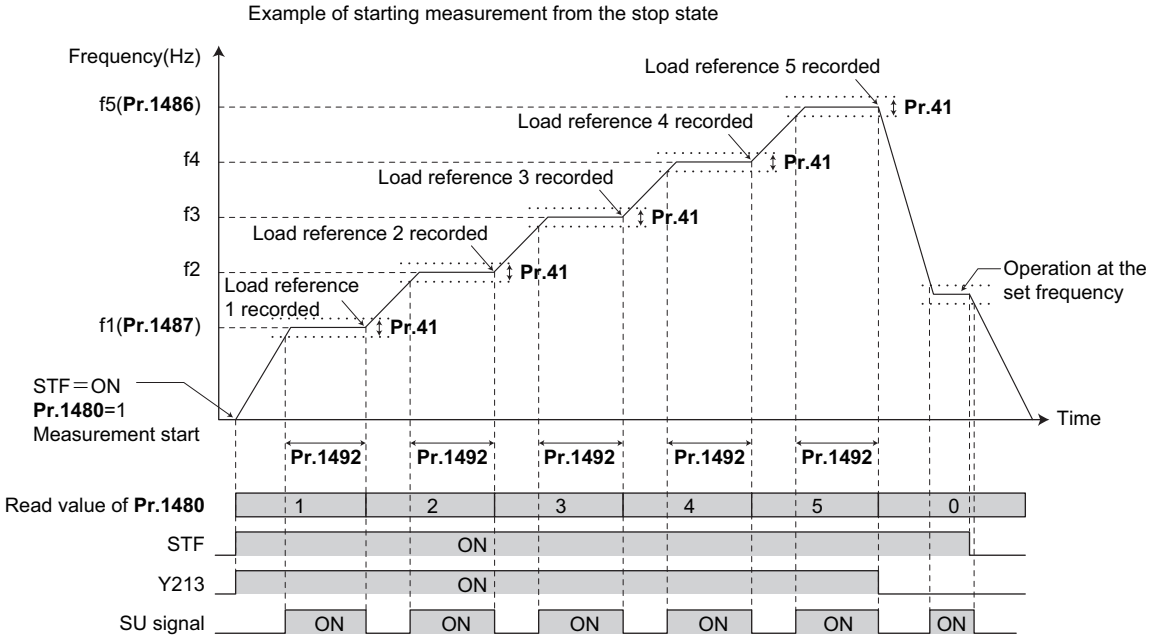

NOTE

- Even if the load measurement is not properly completed, the load characteristics fault is detected based on the load characteristics found by the already-completed portion of the measurement.
- During the load characteristics measurement, the load characteristics fault detection is not performed.
- During the load characteristics measurement, linear acceleration/deceleration is performed even if the S-pattern acceleration/deceleration is set.
- Changing the terminal assignment using **Pr.190 to Pr.196 (Output terminal function selection)** may affect the other functions. Set parameters after confirming the function of each terminal.

上正科技有限公司
購買、維修 此手冊零組件
電話： 037-466333
Email: service@repairtw.com
Line id: @zzzz
www.repairtw.com

◆ Load fault detection setting (Pr.1488 to Pr.1491)

- When the load is deviated from the detection width set in **Pr.1488 Upper limit warning detection width**, the Upper limit warning detection (LUP) signal is output. When the load is deviated from the detection width set in **Pr.1489 Lower limit warning detection width**, the Lower limit warning detection (LDN) signal is output. At the same time, the Load fault warning (LDF) appears on the operation panel.
- For the LUP signal, assign the function by setting "211 (positive logic)" or "311 (negative logic)" in any of **Pr.190 to Pr.196 (Output terminal function selection)**. For the LDN signal, assign the function by setting "212 (positive logic)" or "312 (negative logic)" in any of **Pr.190 to Pr.196 (Output terminal function selection)**.
- When the load is deviated from the detection width set in **Pr.1490 Upper limit fault detection width**, the protective function (E.LUP) is activated and the inverter output is shut off. When the load is deviated from the detection width set in **Pr.1491 Lower limit fault detection width**, the protective function (E.LDN) is activated and the inverter output is shut off.

- To prevent the repetitive on/off operation of the signal due to load fluctuation near the detection range, **Pr.1492 Load status detection signal delay time / load reference measurement waiting time** can be used to set the delay time. Even when a fault is detected out of the detection range once, the warning is not output if the characteristics value returns to the normal range from a fault state within the output delay time.

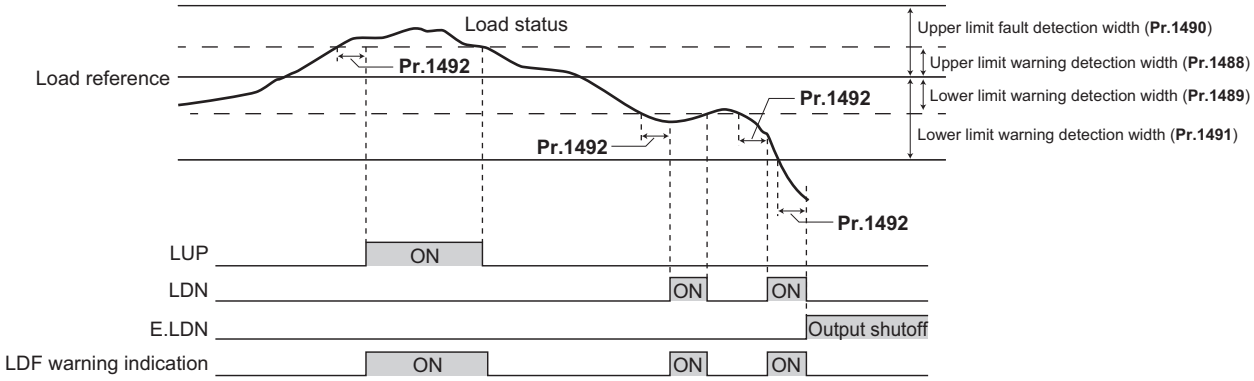

NOTE

- Changing the terminal assignment using **Pr.190 to Pr.196 (Output terminal function selection)** may affect the other functions. Set parameters after confirming the function of each terminal.

◆ Setting example

- The load characteristics are calculated from the parameter setting and the output frequency.
- A setting example is as follows. The reference value is linearly interpolated from the parameter settings. For example, the reference when the output frequency is 30 Hz is 26%, which is linearly interpolated from values of the reference 2 and the reference 3.

上冠科技有限公司
購買、維修 此手冊零組件
電話： 037-456333
Email： service@repairtw.com
Line id： @szzz
www.repairtw.com

Reference	Frequency	Load reference
Load characteristics reference 1	f1: Load characteristics minimum frequency (**Pr.1487**) = 10 Hz	**Pr.1481** = 15%
Load characteristics reference 2	f2 = (f5 - f1)/4 + f1 = 22.5 Hz	**Pr.1482** = 20%
Load characteristics reference 3	f3 = (f5 - f1)/2 + f1 = 35 Hz	**Pr.1483** = 30%
Load characteristics reference 4	f4 = (f5 - f1) × 3/4 + f1 = 47.5 Hz	**Pr.1484** = 60%
Load characteristics reference 5	f5: Load characteristics maximum frequency (**Pr.1486**) = 60 Hz	**Pr.1485** = 100%

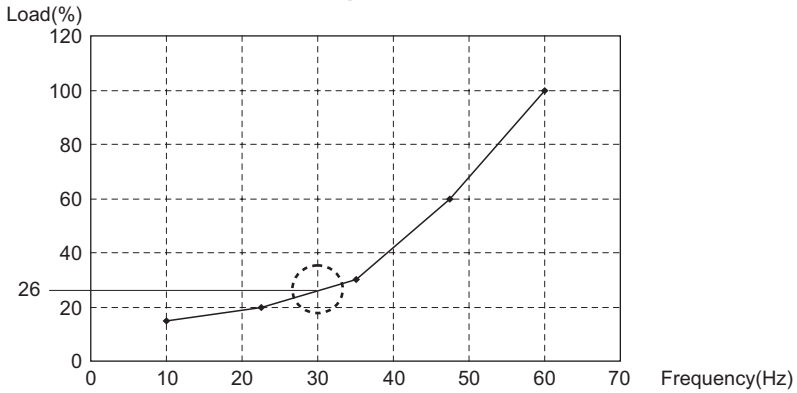

NOTE

- When the load reference is not set for five points, the load characteristics value is determined by linear interpolation of the set load reference values only. If there is only one load reference setting, the set load reference is used as the load reference all through the range.

Parameters referred to

Pr.41 Up-to-frequency sensitivity ☞ page 319
Pr.190 to Pr.196 (Output terminal function selection) ☞ page 312

5.7.13 Motor overspeeding detection

PM

The Overspeed occurrence (E.OS) is activated when the motor speed exceeds the overspeed detection level. This function prevents the motor from accidentally speeding over the specified value, due to an error in parameter setting, etc.

Pr.	Name	Initial value	Setting range	Description
374 **H800**	**Overspeed detection level**	9999	0 to 590 Hz	If the motor rotation speed exceeds the speed set in **Pr.374** during PM motor control, overspeed (E.OS) occurs, and the inverter output is shut off.
			9999	During PM motor control, E.OS occurs when the speed exceeds the "maximum motor frequency + 10 Hz"*1.

*1 The motor maximum frequency is set in **Pr.702 Maximum motor frequency**. When **Pr.702** = "9999 (initial value)", the **Pr.84 Rated motor frequency** is used as the maximum motor frequency.

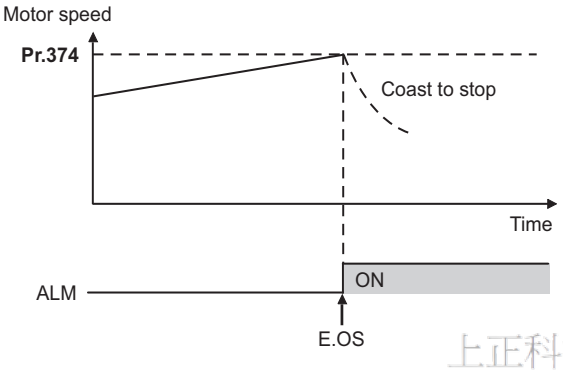

上正科技有限公司
購買、維修 此手冊零組件
電話： 037-466333
Email: service@repairtw.com
Line id: @zzzz
www.repairtw.com

5.8 (M) Item and output signal for monitoring

Purpose	Parameter to set			Refer to page
To display the motor speed (the number of rotations per minute) To switch the unit of measure to set the operation speed from frequency to motor speed	Speed indication and its setting change to rotations per minute	P.M000 to P.M002	Pr.37, Pr.144, Pr.505	286
To change the item monitored on the operation panel and parameter unit	Operation panel monitor item selection Cumulative monitor value clear	P.M020 to P.M023, P.M030, P.M031, P.M044, P.M045, P.M050 to P.M052, P.M100 to P.M104	Pr.52, Pr.170, Pr.171, Pr.268, Pr.290, Pr.563, Pr.564, Pr.774 to Pr.776, Pr.891, Pr.992, Pr.1018, Pr.1106 to Pr.1108	288
To change the monitor item whose data is output via terminal FM (CA) or AM	Terminal FM (CA) function selection	P.M040 to P.M042, P.M044, P.M300, P.M301, P.D100	Pr.54, Pr.55, Pr.56, Pr.158, Pr.290, Pr.291, Pr.866	297
To adjust the output via terminal FM (CA) or AM	Terminal FM (CA)/AM calibration	P.M310, P.M320, P.M321, P.M330 to P.M334	Pr.867, Pr.869, C0 (Pr.900), C1 (Pr.901), C8 (Pr.930) to C11 (Pr.931)	302
To check the effects of energy saving	Energy saving monitoring	P.M023, P.M100, P.M200 to P.M207, P.M300, P.M301	Pr.52, Pr.54, Pr.158, Pr.891 to Pr.899	306
To assign functions to the output terminals	Output terminal function assignment	P.M400 to P.M406, P.M410 to P.M416, P.M420 to P.M422, P.M431	Pr.190 to Pr.196, Pr.289, Pr.313 to Pr.322	312
To detect the output frequency	Up-to-frequency sensitivity Output frequency detection Low speed detection	P.M440 to P.M444	Pr.41 to Pr.43, Pr.50, Pr.870	319
To detect the output current	Output current detection Zero current detection	P.M460 to P.M464	Pr.150 to Pr.153, Pr.166, Pr.167	321
To detect the output torque	Output torque detection	P.M470	Pr.864	323
To use the remote output function	Remote output	P.M500 to P.M502	Pr.495 to Pr.497	324
To use the analog remote output function	Analog remote output	P.M530 to P.M534	Pr.655 to Pr.659	325
To output the fault code via a terminal	Fault code output function	P.M510	Pr.76	327
To detect the specified output power	Pulse train output of output power	P.M520	Pr.799	328
To detect the control circuit temperature	Control circuit temperature monitoring	P.M060	Pr.663	329

上正科技有限公司
購買、維修 此手冊適用
電話：037-466333
Email：service@repairtw.com
Line id：@zzz
www.repairtw.com

5.8.1 Speed indication and its setting change to rotations per minute

The frequency monitored or set on the operation panel can be changed to the motor speed or the machine speed.

Pr.	Name	Initial value		Setting range	Description
		FM	CA		
37 M000	Speed display	0		0	Monitoring and setting of frequency
				1 to 9998[*1]	Set a number for the speed of machine operated at the speed (frequency) set in **Pr.505**.
505 M001	Speed setting reference	60 Hz	50 Hz	1 to 590 Hz	Set the reference speed (frequency) for **Pr.37**.
144 M002	Speed setting switchover	4		0, 2, 4, 6, 8, 10, 12, 102, 104, 106, 108, 110, 112	Set the number of motor poles for the indication of the motor speed.

*1 The maximum value of the setting range differs according to the **Pr.1 Maximum frequency**, **Pr.505 Speed setting reference**, and it can be calculated from the following formula.
The maximum value of **Pr.37** < 65535 × **Pr.505** / **Pr.1** setting value (Hz).
The maximum setting value of **Pr.37** is 9998 if the result of the above formula exceeds 9998.

◆ Indication of motor speed (Pr.37, Pr.144)

- To change the indication to the motor speed, set the number of motor poles (2, 4, 6, 8, 10, or 12) or the number of motor poles with the addition of 100 (102, 104, 106, 108, 110, or 112) in **Pr.144**.
- Whenever the number of motor poles set in **Pr.81 Number of motor poles** is changed, the **Pr.144** setting changes automatically in conjunction with **Pr.81**. However, the **Pr.81** setting does not automatically change when the **Pr.144** setting is changed.
  Example 1) Changing the initial value of **Pr.81** to "2" will change the **Pr.144** setting from "4" to "2".
  Example 2) Changing the **Pr.81** setting to "2" while **Pr.144** = "104" will change the **Pr.144** setting from "104" to "102".

◆ Indication of machine speed (Pr.37, Pr.505)

- To change the indication to the machine speed, set a number in **Pr.37** which corresponds to the speed of machine operated at the frequency set in **Pr.505**.
- For example, when **Pr.505** is set to 60 Hz and **Pr.37** is set to "1000", the operation panel indicates "1000" as the monitor value of machine speed while the machine is operated at the frequency of 60 Hz. "500" is displayed while the running frequency is 30 Hz.

◆ Monitoring/setting items and its increments

- When both settings of **Pr.37** and **Pr.144** are changed from the initial values, a precedence order for these settings is as follows:
  Pr.144 = 102 to 112 > **Pr.37** = 1 to 9998 > **Pr.144** = 2 to 12.
- The monitoring/setting items and its increments are listed with the following matrix to show the combination of the **Pr.37** and **Pr.144** settings.

上正科技有限公司
購買、維修 此手冊零組件
電話: 037-466333
Email: service@repairtw.com
Line id: @zzzz
www.repairtw.com

Pr.37 setting	Pr.144 setting	Output frequency indication	Set frequency indication	Running speed indication	Indication of frequency setting parameter
0 (initial value)	0	0.01 Hz	0.01 Hz	1 r/min*1	0.01 Hz
	2 to 12	0.01 Hz (initial setting)	0.01 Hz (initial setting)	1 r/min*1 (initial setting)	0.01 Hz (initial setting)
	102 to 112	1 r/min*1	1 r/min*1	1 r/min*1	1 r/min*1
1 to 9998	0	0.01 Hz	0.01 Hz	1 (machine speed*1)	0.01 Hz
	2 to 12	1 (machine speed*1)	1 (machine speed*1)	1 (machine speed*1)	1 (machine speed*1)
	102 to 112	0.01 Hz	0.01 Hz	1 r/min*1	0.01 Hz

*1 Motor speed r/min conversion formula: frequency × 120 / number of motor poles (**Pr.144**)
Machine speed conversion formula: **Pr.37** × frequency / **Pr.505**
The **Pr.144** value in the above formula is "**Pr.144** - 100" when any of "102 to 112" is set in **Pr.144**. The value is "4" when **Pr.37** = 0 and **Pr.144** = 0.
The item set in **Pr.505** is consistently a frequency (Hz).

NOTE

- The inverter's output frequency is displayed as synchronous speed under V/F control. The displayed value is "actual motor speed" + "motor slip". When Advanced magnetic flux vector control or PM motor control is selected, the actual motor speed (estimated value by motor slip calculation) is used.
- When **Pr.37** = "0" and **Pr.144** = "0", the running speed monitor is displayed with the number of motor poles 4. (Displays 1800 r/min at 60 Hz)
- To change the PU main monitor (PU main display), refer to **Pr.52**.
- When using the machine speed display for the parameter unit (FR-PU07), do not change the speed with the up/down key if a set speed above 65535 is displayed. The set speed may become an undetermined value.
- When the FR-A8ND is connected, the frequency display (setting) is used regardless of the **Pr.37, Pr.144** settings.

⚠ CAUTION

- Make sure to set the running speed and the number of motor poles.
  Otherwise, the motor might run at extremely high speed, damaging the machine.

Parameters referred to
Pr.1 Maximum frequency ☞ page 271
Pr.52 Operation panel main monitor selection ☞ page 288
Pr.81 Number of motor poles ☞ page 169
Pr.800 Control method selection ☞ page 169

5.8.2 Monitor item selection on operation panel or via communication

The monitor item to be displayed on the operation panel or the parameter unit can be selected.

Pr.	Name	Initial value	Setting range	Description
52 M100	Operation panel main monitor selection	0 (output frequency)	0, 5 to 14, 17, 18, 20, 23 to 25, 34, 38, 40 to 45, 50 to 57, 61, 62, 64, 67 to 69, 81 to 96, 98, 100	Select the item monitored on the operation panel or parameter unit. Refer to page 289 for the monitor item selection.
774 M101	Operation panel monitor selection 1	9999	1 to 3, 5 to 14, 17, 18, 20, 23 to 25, 34, 38, 40 to 45, 50 to 57, 61, 62, 64, 67 to 69, 81 to 96, 98, 100, 9999	Each of the initial items monitored on the operation panel or parameter unit in the monitor mode (output frequency, output current, and output voltage) can be switched to a user-designated item. 9999: Follows the **Pr.52** setting.
775 M102	Operation panel monitor selection 2			
776 M103	Operation panel monitor selection 3			
992 M104	Operation panel setting dial push monitor selection	0 (set frequency)	0 to 3, 5 to 14, 17, 18, 20, 23 to 25, 34, 38, 40 to 45, 50 to 57, 61, 62, 64, 67 to 69, 81 to 96, 98, 100	Select the monitor item displayed on the operation panel at the time when the setting dial is pressed.
170 M020	Watt-hour meter clear	9999	0	Set "0" to clear the watt-hour meter.
			10	Set "10" to monitor the cumulative power in the range of 0 to 9999 kWh via communication.
			9999	Set "9999" to monitor the cumulative power in the range of 0 to 65535 kWh via communication.
563 M021	Energization time carrying-over times	0	(0 to 65535) (Read-only)	The number of times that the cumulative energization time exceeded 65535 hours is displayed (read-only).
268 M022	Monitor decimal digits selection	9999	0	Value is displayed in 1 increments (an integer).
			1	Value is displayed in 0.1 increments.
			9999	No function
891 M023	Cumulative power monitor digit shifted times	9999	0 to 4	Set the number of digits to move the decimal point of the cumulative energy monitored value to the left. The readout peaks out at the upper limit of readout.
			9999	The function of moving the decimal point is not available. The readout is reset to 0 when it exceeds the upper limit.
171 M030	Operation hour meter clear	9999	0	Set "0" to clear the operation hour meter.
			9999	The readout is always 9999. Nothing changes when "9999" is set.
564 M031	Operating time carrying-over times	0	(0 to 65535) (Read-only)	The number of times that the operating time reaches 65535 hours is displayed. Read-only.
290 M044	Monitor negative output selection	0	0 to 7	Set the availability of negative signals output via terminal AM, to the operation panel, and through communication.
1018 M045	Monitor with sign selection	9999	0	Select the item group to enable the indication of negative signed numbers.
			9999	
1106 M050	Torque monitor filter	9999	0 to 5 s	The filter time constant is selectable for monitoring of the torque. A larger setting results in slower response.
			9999	0.3 s filter
1107 M051	Running speed monitor filter	9999	0 to 5 s	The filter time constant is selectable for monitoring of the running speed. A larger setting results in slower response.
			9999	0.08 s filter
1108 M052	Excitation current monitor filter	9999	0 to 5 s	The filter time constant is selectable for monitoring of the motor excitation current. A larger setting results in slower response.
			9999	0.3 s filter

上正科技有限公司
購買、維修 此手機電話
電話：037-466333
Email: service@repairtw.com
Line id: @zzzz
www.repairtw.com

◆ Monitor item list (Pr.52, Pr.774 to Pr.776, Pr.992)

- Use **Pr.52, Pr.774 to Pr.776**, or **Pr.992** to select the item to monitor on the operation panel or the parameter unit.
- Refer to the following table to find the setting value for each monitoring. The value in the Pr. setting column is set in each of the parameters for monitoring (**Pr.52, Pr.774 to Pr.776,** and **Pr.992**) to determine the monitor item. The value in the RS-485 column is used for the RS-485 communication special monitor selection. The value in the MODBUS RTU column is used for the MODBUS RTU real time monitor. (The items marked with "—" cannot be selected. The circle in the negative indication (-) column indicates that the indication of negative signed numbers is available.)

Monitor item	Increment and unit	Pr. setting	RS-485	MODBUS RTU	Negative indication (-)	Description
Output frequency (speed)*16	0.01 Hz*15	1/0/100	H01	40201	○*18	The inverter output frequency is displayed.
Output current*6*8*16	0.01/0.1 A*5	2/0/100	H02	40202		The inverter output current effective value is displayed.
Output voltage*6*16	0.1 V	3/0/100	H03	40203		The inverter output voltage is displayed.
Fault indication	—	0/100	—	—		Each of the last 8 faults is displayed individually.
Set frequency / motor speed setting	0.01 Hz*15	5*1	H05	40205		The set frequency is displayed.
Operation speed	1 (r/min)	6*1	H06	40206	○*18	The motor speed is displayed (depending on the settings of **Pr.37** and **Pr.144**). (Refer to page 286.)
Motor torque	0.1%	7*1	H07	40207	○	The motor torque is displayed as a percentage (0% under V/F control), considering the rated torque as 100%.
Converter output voltage*6	0.1 V	8*1	H08	40208		The DC bus voltage value is displayed.
—	—	9*7	H09	40209		For manufacturer setting. Do not set.
Electronic thermal O/L relay load factor	0.1%	10*1	H0A	40210		The motor thermal cumulative value is displayed, considering the thermal operation level as 100%.
Output current peak value*6	0.01/0.1 A*5	11*1	H0B	40211		The peak value of output current, which is constantly stored, is displayed. (It is reset with every startup of the inverter.)
Converter output voltage peak value*6	0.1 V	12*1	H0C	40212		The DC bus voltage peak value, which is constantly stored, is displayed. (It is reset with every startup of the inverter.)
Input power	0.01/0.1 kW*5	13*1	H0D	40213		The power at the inverter input side is displayed.
Output power*8	0.01/0.1 kW*5	14*1	H0E	40214		The power at the inverter output side is displayed.
Load meter	0.1%	17	H11	40217		Torque current is displayed as a percentage, considering **Pr.56** setting value as 100%.
Motor excitation current*6	0.01 A/0.1 A*5	18	H12	40218		The motor excitation current is displayed.
Cumulative energization time*2	1 h	20	H14	40220		The cumulative operation time is displayed. The number of times an integrated value has reached the maximum value of 65535 hours can be checked in **Pr.563**.
Actual operation time*2*3	1 h	23	H17	40223		The cumulative operation time is displayed. The number of times an integrated value has reached the maximum value of 65535 hours can be checked in **Pr.564**. Use **Pr.171** to reset it. (Refer to page 295.)
Motor load factor	0.1%	24	H18	40224		The output current value is displayed as a percentage, considering the inverter rated current value as 100%. Readout (%) = present output current value / inverter rated current value × 100
Cumulative energy*6	0.01/0.1 kWh*4*5	25	H19	40225		The cumulative energy based on the monitored output power is displayed. Use **Pr.170** to reset it. (Refer to page 294.)
Motor output	0.01/0.1 kW*5	34	H22	40234		The output of a machine connected to the motor shaft is displayed. It is determined by multiplying the present output torque with the present motor speed.
Trace status	1	38	H26	40238		The trace status is displayed. (Refer to page 465.)

上正科技有限公司
購買、維修 此手冊零組件
電話: 07-466333
Email: service@repairtw.com
Line id: @zzzz
www.repairtw.com

Monitor item	Increment and unit	Pr. setting	RS-485	MODBUS RTU	Negative indication (-)	Description
PLC function user monitor 1	Increment set in the register SD1215	40	H28	40240		The user-designated monitor item is displayed using the PLC function. Each value of the following special registers is displayed. SD1216: displayed with the setting value "40" SD1217: displayed with the setting value "41" SD1218: displayed with the setting value "42" (Refer to the PLC Function Programming Manual.)
PLC function user monitor 2		41	H29	40241		
PLC function user monitor 3		42	H2A	40242		
Station number (RS-485 terminals)	1	43	H2B	40243		The station number (0 to 31) of the inverter enabling communication via the RS-485 terminals is displayed.
Station number (PU)	1	44	H2C	40244		The station number (0 to 31) of the inverter enabling communication via the PU connector is displayed.
Station number (CC-Link)	1	45	H2D	40245		The station number of the inverter enabling CC-Link communication is displayed. ("0" is displayed when the FR-A8NS is not installed.)
Power saving effect	Increment and unit vary depending on the parameter settings.	50	H32	40250		The energy saving effect monitoring is enabled. The item to monitor is selectable from among the saved power, the average energy saving, and the energy cost savings. Some of them can be displayed as a percentage according to the parameter settings. (Refer to page 306.)
Cumulative energy saving		51	H33	40251		
PID set point	0.1%	52	H34	40252		The set point, measured value, and deviation during PID control operation is displayed. (Refer to page 412.)
PID measured value	0.1%	53	H35	40253		
PID deviation	0.1%	54	H36	40254	○	
Input terminal status	—	55[*17]	H0F[*10]	40215[*10]		The ON/OFF state of the input terminals on the inverter is displayed. (Refer to page 293 for details of indication on the DU.)
Output terminal status	—		H10[*11]	40216[*11]		The ON/OFF state of the output terminals on the inverter is displayed. (Refer to page 293 for details of indication on the DU.)
Option input terminal status[*9]	—	56	—	—		The ON/OFF state of the input terminals on the digital input option (FR-A8AX) is displayed on the DU. (Refer to page 293 for details.)
Option output terminal status[*9]	—	57	—	—		The ON/OFF state of the output terminals on the digital output option (FR-A8AY) or the relay output option (FR-A8AR) is displayed on the DU. (Refer to page 293 for details.)
Option input terminal status 1 (for communication)[*9]	—	—	H3A[*12]	40258[*12]		The ON/OFF state of the input terminals X0 to X15 on the digital input option (FR-A8AX) is monitored via RS-485 communication or other communication when the communication option is installed.
Option input terminal status 2 (for communication)[*9]	—	—	H3B[*13]	40259[*13]		The ON/OFF state of the input terminal DY on the digital input option (FR-A8AX) is monitored via RS-485 communication or other communication when the communication option is installed.
Option output terminal status (for communication)[*9]	—	—	H3C[*14]	40260[*14]		The ON/OFF state of the output terminals on the digital output option (FR-A8AY) or the relay output option (FR-A8AR) is monitored via RS-485 communication or other communication when the communication option is installed.
Motor thermal load factor	0.1%	61	H3D	40261		The accumulated heat value of the motor thermal O/L relay is displayed. The motor overload trip (electronic thermal relay function) (E.THM) occurs at 100%.
Inverter thermal load factor	0.1%	62	H3E	40262		The accumulated heat value of the inverter thermal O/L relay is displayed. The inverter overload trip (electronic thermal relay function) (E.THT) occurs at 100%.
PTC thermistor resistance	0.01 kΩ	64	H40	40264		The PTC thermistor resistance is displayed when **Pr.561 PTC thermistor protection level** ≠ 9999. (The output voltage is displayed when **Pr.561** = 9999.)
PID measured value 2	0.1%	67	H43	40267		The PID measured value is displayed while the PID control is enabled (**Pr.128** ≠ "0"), even if PID control operating conditions are not satisfied. (Refer to page 412.)
Emergency drive status[*7]	1	68	H44	40268		Displays the emergency drive status. (Refer to page 263.)

上正科技有限公司
購買、維修 此手冊更多
電話： 037-466333
Email: service@repairtw.com
Line id: @zzzz
www.repairtw.com

Monitor item	Increment and unit	Pr. setting	RS-485	MODBUS RTU	Negative indication (-)	Description
PID input pressure value	0.1%	69	H45	40269		Displays the input pressure value of the PID input pressure control function.
32-bit cumulative energy (lower 16 bits)	1 kWh	—	H4D	40277		The upper or lower 16 bits of the 32-bit cumulative energy is displayed on each indication. It is monitored via RS-485 communication or other communication with a communication option installed. (To find the monitor codes for each communication option, refer to the Instruction Manual of each communication option.)
32-bit cumulative energy (upper 16 bits)	1 kWh	—	H4E	40278		
32-bit cumulative energy (lower 16 bits)	0.01/0.1 kWh *5	—	H4F	40279		
32-bit cumulative energy (upper 16 bits)	0.01/0.1 kWh *5	—	H50	40280		
BACnet reception status	1	81	H51	40281		Displays the BACnet reception status.
BACnet token pass counter	1	82	H52	40282		Displays the count of received token.
BACnet valid APDU counter	1	83	H53	40283		Displays the count of valid APDU detection.
BACnet communication error counter	1	84	H54	40284		Displays the count of communication error detection.
BACnet terminal FM/CA output level	0.1%	85	H55	40285		Displays the value set in the Analog Output object (ID=0: Terminal FM/CA) for BACnet communication.
BACnet terminal AM output level	0.1%	86	H56	40286	○	Displays the value set in the Analog Output object (ID=1: Terminal AM) for BACnet communication. (A display without signs displays negative values as absolute values.)
Remote output value 1	0.1%	87	H57	40287		Displays the value set in **Pr.656 to Pr.659** (analog remote output). (Refer to page 325.)
Remote output value 2	0.1%	88	H58	40288	○	
Remote output value 3	0.1%	89	H59	40289		
Remote output value 4	0.1%	90	H5A	40290		
PID manipulated amount	0.1%	91	H5B	40291	○	The PID control manipulated amount is displayed. (Refer to page 412.)
Second PID set point	0.1%	92	H5C	40292		The set point, measured value, or deviation is displayed during the second PID control operation. (Refer to page 412.)
Second PID measured value	0.1%	93	H5D	40293		
Second PID deviation	0.1%	94	H5E	40294	○	
Second PID measured value 2	0.1%	95	H5F	40295		The PID measured value is displayed while the second PID control is enabled (**Pr.753** ≠ "0"), even if PID control operating conditions are not satisfied. (Refer to page 412.)
Second PID manipulated amount	0.1%	96	H60	40296	○	The second PID control manipulated amount is displayed. (Refer to page 412.)
Control circuit temperature	1°C	98	H62	40298	○	The temperature of the control circuit board is displayed. (Refer topage 329.) When negative number not displayed: 0 to 100°C When negative number displayed: -20 to 100°C

上正科技有限公司
購買、維修 此手冊零組件
電話： 037-466333
Email: service@repairtw.com
Line id: @zzzz
www.repairtw.com

*1 To monitor the item on the LCD operation panel (FR-LU08) or the parameter unit (FR-PU07) in the monitor mode, use **Pr.774 to Pr.776** or the monitor function of the FR-LU08 or the FR-PU07 for setting.

*2 The cumulative energization time and actual operation time are accumulated from 0 to 65535 hours, then cleared, and accumulated again from 0.

*3 The actual operation time does not increase if the cumulative running time before power OFF is less than an hour.

*4 On the parameter unit (FR-PU07), the unit "kW" is displayed.

*5 The increment differs according to the inverter capacity. (FR-F820-02330(55K) or lower, FR-F840-01160(55K)or lower / FR-F820-03160(75K) or higher, FR-F840-01800(75K) or higher)

*6 Since each readout of the output voltage and output current displayed on the operation panel (FR-DU08) is a four-digit number, a value of more than 9999 is displayed as "----".

*7 The setting is available for the standard model.

*8 The inverter regards the output current which is less than the specified current level (5% of the rated inverter current) as 0 A. Therefore, each readout of an output current and output power may show "0" if a too small-capacity motor is used as contrasted with the inverter capacity and the output current falls below the specified value.

*9 Available when the plug-in option is connected.

*10 The details of bits for the input terminal status are as follows. (1: ON state, 0: OFF state of a terminal on the inverter. "—" denotes an indefinite (null) value.)

b15															b0
-	-	-	-	CS	RES	STP (STOP)	MRS	JOG	RH	RM	RL	RT	AU	STR	STF

*11 The details of bits for the output terminal status are as follows. (1: ON state, 0: OFF state of a terminal on the inverter. "—" denotes an indefinite (null) value.)

b15															b0
-	-	-	-	-	-	-	-	So (SO)	ABC2	ABC1	FU	OL	IPF	SU	RUN

*12 The details of bits for the option input terminal status 1 are as follows. (1: ON state, 0: OFF state of a terminal on the FR-A8AX.) Every bit is 0 (OFF) when the option is not installed.

b15															b0
X15	X14	X13	X12	X11	X10	X9	X8	X7	X6	X5	X4	X3	X2	X1	X0

*13 The details of bits for the option input terminal status 1 are as follows. (1: ON state, 0: OFF state of a terminal on the FR-A8AX. "—" denotes an indefinite (null) value.) Every bit is 0 (OFF) when the option is not installed.

b15															b0
-	-	-	-	-	-	-	-	-	-	-	-	-	-	-	DY

*14 The details of bits for the option output terminal status are as follows. (1: ON state, 0: OFF state of a terminal on the FR-A8AY/A8AR. "—" denotes an indefinite (null) value.) Every bit is 0 (OFF) when the option is not installed.

b15															b0
-	-	-	-	-	-	RA3	RA2	RA1	Y6	Y5	Y4	Y3	Y2	Y1	Y0

*15 The increment is 1 when **Pr.37** = "1 to 9998" or when **Pr.144** = "2 to 12" or "102 to 112". (Refer to page 286.)
*16 The monitored values are retained even if an inverter fault occurs. Resetting clears the retained values.
*17 Parameter setting is not available for setting the item as the main monitor item on the LCD operation panel (FR-LU08) or the parameter unit (FR-PU07). Use the monitor function of the FR-LU08 or the FR-PU07 for setting.
*18 Setting of **Pr.1018 Monitor with sign selection** is required. Also, it will be displayed without a minus sign on the operation panel. Confirm the rotation direction with the [FWD] or [REV] indicator.

上証科技有限公司
購買、維修 此手冊零組件
電話： 037-466333
Email: service@repairtw.com
Line Id: @2222
www.repairtw.com

◆ Monitor display for operation panel (Pr.52, Pr.774 to Pr.776)

- When **Pr.52** = "0" (initial value), the monitoring of output frequency, output current, output voltage and fault display can be selected in sequence by pressing SET.
- The Load meter, motor excitation current and motor load factor are displayed on the second monitor (output current) position, among the monitors set in **Pr.52**. Other monitors are displayed in the third monitor (output voltage) position.
- The monitor displayed at power ON is the first monitor (the output frequency monitor, according to the initial value). Display the monitor you want to display on the first monitor and hold down SET for 1 second. To return to the output frequency monitor, display the output frequency monitor and hold down SET for 1 second.

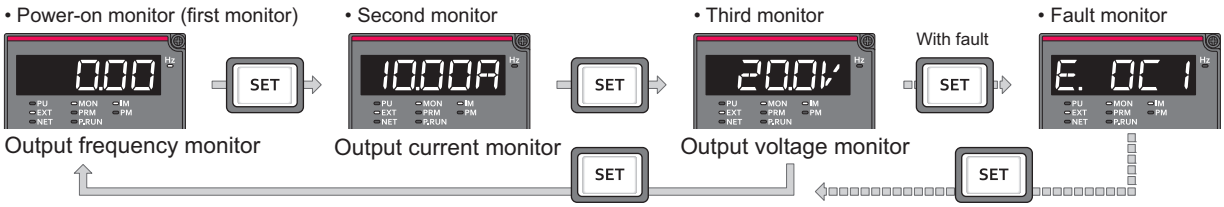

For example, when **Pr.52** = "20" (cumulative energization time), the monitor is displayed on the operation panel as shown below.

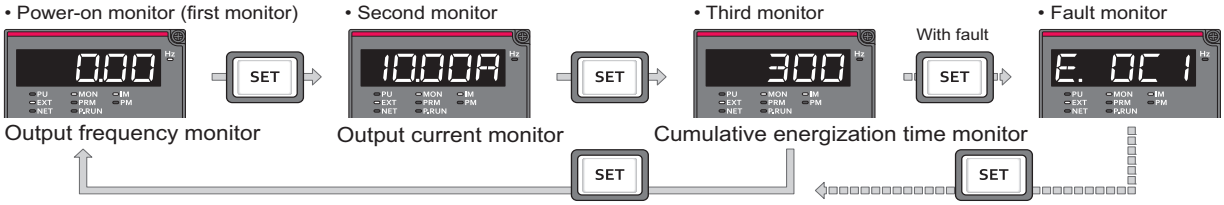

- **Pr.774** sets the output frequency monitor, **Pr.775** sets the output current monitor, and **Pr.776** sets the monitor description to be displayed at the output voltage monitor position. When **Pr.774 to Pr.776** = "9999" (initial value), the **Pr.52** setting value is used.

NOTE

- On the operation panel (FR-DU08), the "Hz" unit indicator is lit while displaying the output frequency, the "Hz" blinks when displaying the set frequency.

◆ Displaying the set frequency during stop (Pr.52)

- When **Pr.52** = "100", the set frequency is displayed during stop, and output frequency is displayed during running. (LED of Hz flickers during stop and is lit during operation.)

Pr.52 setting	Status	Output frequency	Output current	Output voltage	Fault monitor
0	During running/ stop	Output frequency	Output current	Output voltage	Fault monitor
100	During stop	Set frequency*1			
	During running	Output frequency			

*1 Displays the frequency that is output when the start command is ON. The value considers the maximum/minimum frequency and frequency jumps. It is different from the frequency setting displayed when **Pr.52** = "5".

5

NOTE

- During an error, the output frequency at error occurrence appears.
- During output shutoff by the MRS signal, the values displayed are the same as during a stop.
- During offline auto tuning, the tuning state monitor takes priority.

◆ Operation panel setting dial push display (Pr.992)

- Use **Pr.992** to select the monitor that appears when the setting dial on the operation panel (FR-DU08) is pushed.
- When **Pr.992** = "0 (initial value)", keep pressing the setting dial when in PU operation mode or External/PU combined operation mode 1 (**Pr.79 Operation mode selection** = "3") to show the presently set frequency.
- When **Pr.992** = "100", the set frequency is displayed during stop, and output frequency is displayed during running.

上正科技有限公司
購買、維修此工控零組件
電話： 037-463333
Email: service@repairtw.com
Line id: @zzzz
www.repairtw.com

Pr.992 setting	Status	Monitor displayed by the setting dial push
0	During running/stop	Set frequency (PU direct-in frequency)
100	During stop	Set frequency*1
	During running	Output frequency

*1 Displays the frequency that is output when the start command is ON. The value considers the maximum/minimum frequency and frequency jumps. It is different from the frequency setting displayed when **Pr.992** = "5".

◆ Monitoring I/O terminals on the operation panel (FR-DU08) (Pr.52, Pr.774 to Pr.776, Pr.992)

- When **Pr.52 (Pr.774 to Pr.776, Pr.992)** = "55 to 57", the I/O terminal state can be monitored on the operation panel (FR-DU08).
- When a terminal is ON, the corresponding LED segment is ON. The center LED segments are always ON.

Pr.52, Pr.774 to Pr.776, Pr.992 setting	Monitor item	Monitor description
55	I/O terminal status	Displays the I/O terminal ON/OFF state of the inverter.
56*1	Option input terminal status	Displays input terminal ON/OFF state of the digital input option (FR-A8AX)
57*1	Option output terminal status	Displays output terminal ON/OFF state of the digital output option (FR-A8AY) or the relay output option (FR-A8AR).

*1 The setting value "56 or 57" can be set even if the option is not installed. All are OFF when the option is not connected.

- On the I/O terminal monitor, the upper LEDs indicate the input terminal status, and the lower LEDs indicate the output terminal status.

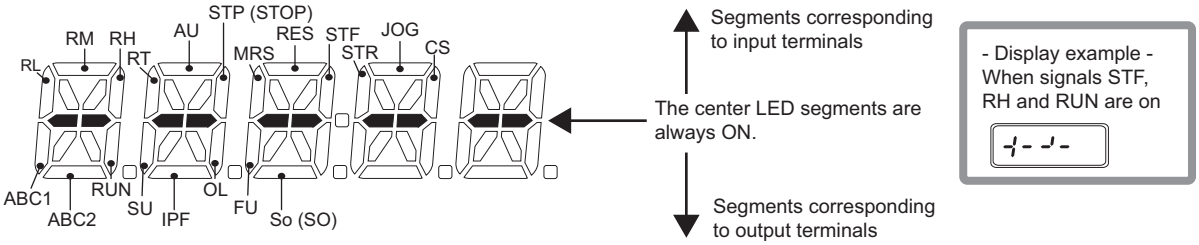

- The decimal point of the last digit on the LED is lit for the input option terminal monitor.

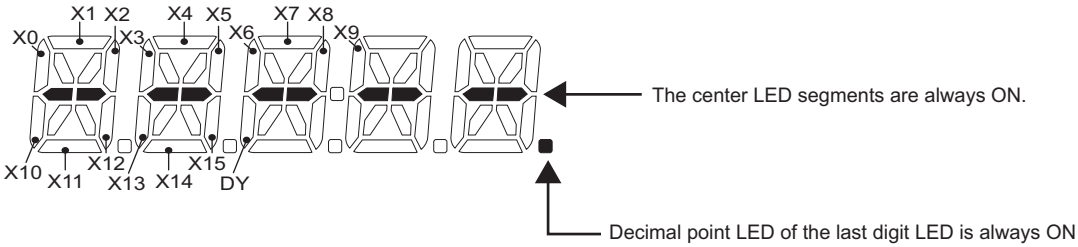

- The decimal point of the second last digit on the LED is lit for the output option terminal monitor.

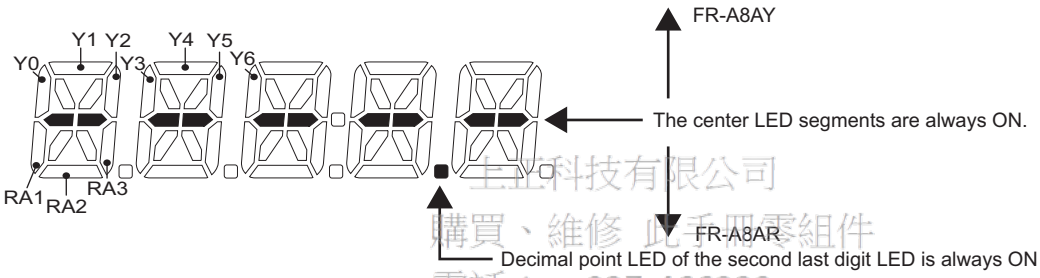

上立科技有限公司
購買、維修 此手冊零組件
電話： 037-466333
Email: service@repairtw.com
Line id: @zzzz
www.repairtw.com

◆ Monitoring and resetting cumulative power (Pr.170, Pr.891)

- When the cumulative power is monitored (**Pr.52** = "25"), the output power monitor value is added up and is updated in 100 ms increments.
- The values are stored in EEPROM every 10 minutes. The values are also stored in EEPROM at power OFF or inverter reset.
- Increments and ranges of monitoring on the operation panel or parameter unit and via communication (RS-485 communication or other communication with communication option installed) are as follows.

On operation panel or parameter unit*1		Via communication		
Range	Increment	Range		Increment
		Pr.170 = 10	Pr.170 = 9999	
0 to 999.99 kWh	0.01 kWh	0 to 9999 kWh	0 to 65535 kWh (initial value)	1 kWh
1000.0 to 9999.9 kWh	0.1 kWh			
10000 to 99999 kWh	1 kWh			

*1 Energy is measured in the range of 0 to 99999.99 kWh, and displayed in five digits. After the watt-hour meter (cumulative power counter) reaches "999.99" (999.99 kWh), the meter displays values in 0.1 increments such as "1000.0" (1000.0 kWh).

- The decimal point position on the watt-hour meter can be shifted to left. The number of digits to be shifted is equal to the setting of **Pr.891 Cumulative power monitor digit shifted times**. For example, when **Pr.891** = "2", the cumulative power value 1278.56 kWh is displayed as 12.78 (in 100 kWh increments) on the operation panel, or displayed as 12 on a display used for monitoring via communication.
- When **Pr.891** = "0 to 4", the meter stops at the maximum number. When **Pr.891** = "9999", the meter returns to 0 and the counting starts again.
- Writing "0" in **Pr.170** clears the cumulative power monitor.

NOTE

- When **Pr.170** is read just after "0" has been written in **Pr.170**, the setting "9999" or "10" is displayed.

◆ Monitoring cumulative energization time (Pr.563)

- When the cumulative energization time is selected as a monitor item (**Pr.52** = "20"), the counter of cumulative energization time since the inverter shipment accumulated every hour is displayed.
- The cumulative energization time is displayed in 0.001-hour increments until the cumulative time reaches one hour, and then the time is displayed in 1-hour increments.
- The EEPROM is updated every minute until the cumulative energization time reaches one hour, and then the EEPROM is updated every 10 minutes. The EEPROM is also updated at power OFF.
- When the cumulative energization time counter reaches 65535, it starts from 0 again. The number of times the cumulative energization time counter reaches 65535 can be checked with **Pr.563**.

NOTE

- The cumulative energization time does not increase if the power is turned OFF after less than an hour.

◆ Actual operation time monitoring (Pr.171, Pr.564)

- On the actual operation time monitoring (**Pr.52** = "23"), the inverter running time is added up every hour. (Time is not added up during a stop.)
- The time is displayed in 1-hour increments.
- The values are stored in EEPROM every 10 minutes. The EEPROM is also updated at power OFF.
- When the cumulative energization time counter reaches 65535, it starts from 0 again. The number of times the actual operation time counter reaches 65535 can be checked with **Pr.564**.
- Setting "0" in **Pr.171** clears the actual operation time meter.

NOTE

- The actual operation time does not increase if the cumulative running time before power OFF is less than an hour.
- Once "0" is set in **Pr.171**, the setting of **Pr.171** is always turned to "9999" afterwards. Setting "9999" does not clear the actual operation time meter.

上正科技有限公司
購買、維修 此手冊零組件
電話： 037-466333
Email: service@repairtw.com
Line id: @zzzz
www.repairtw.com

◆ Hiding the decimal places for the monitors (Pr.268)

- The numerical figures after a decimal point displayed on the operation panel may fluctuate during analog input, etc. The decimal places can be hidden by selecting the decimal digits with **Pr.268**.

Pr.268 setting	Description
9999 (initial value)	No function
0	For the first or second decimal places (0.1 increments or 0.01 increments) of the monitor, numbers in the first decimal place and smaller are rounded to display an integral value (1 increments). The monitor value equal to or smaller than 0.99 is displayed as 0.
1	When monitoring with the second decimal place (0.01 increments), the 0.01 decimal place is dropped and the monitor displays the first decimal place (0.1 increments). When monitoring with the first decimal place, the display will not change.

NOTE

- The number of readout digits of the cumulative energization time (**Pr.52** = "20"), actual operation time (**Pr.52** = "23"), cumulative energy (**Pr.52** = "25"), and cumulative energy saving (**Pr.52** = "51") does not change.

◆ Enabling display of negative numbers during monitoring (Pr.290)

- Negative signal outputs can be selected for the items monitored via terminal AM (analog voltage output), via a communication option, and on the operation panel. To check which items can be monitored with indication of negative numbers, refer to the monitor items list (on page 289).

Pr.290 setting	Negative numbers indication (via terminal AM)	Negative numbers indication on operation panel	Negative numbers indication (via communication option)
0 (initial value)	—	—	—
1	Enabled	—	—
2	—	Enabled	—
3	Enabled	Enabled	—
4	—	—	Enabled
5	Enabled	—	Enabled
6	—	Enabled	Enabled
7	Enabled	Enabled	Enabled

—: Negative numbers indication disabled (positive only)

- Select the item group to enable the indication of negative signed numbers by setting **Pr.1018 Monitor with sign selection**.

Monitor item	Pr.1018 setting	
	9999	0
Output frequency	—	○*1
Motor speed	—	○*1
Motor torque	○	○
PID deviation	○	○
BACnet terminal AM output level	○	○
Remote output 1	○	○
Remote output 2	○	○
Remote output 3	○	○
Remote output 4	○	○
PID manipulated amount	○	○
Second PID deviation	○	○
Second PID manipulated amount	○	○
Control circuit temperature	○	○

上正科技有限公司
購買、維修 跑手冊零組件
電話： 037-466333
Email: service@repairtw.com
Line id: @zzzz
www.repairtw.com

○: Negative numbers displayed with minus sign, —: Negative numbers not displayed (positive only)

*1 Negative numbers are not displayed on the operation panel. Confirm the rotation direction with the [FWD] or [REV] indicator.

NOTE

- When the output via terminal AM (analog voltage output) is set to "Negative numbers indication enabled", the output is within the range of -10 to +10 VDC. Connect the meter with which output level is matched.
- Parameter unit (FR-PU07) displays only positive values.

◆ Monitor filter (Pr.1106 to Pr.1108)

- The response level (filter time constant) of the following monitor indicators can be adjusted. Increase the setting when a monitor indicator is unstable, for example.

Pr.	Monitor number	Monitor indicator name
1106	7	Motor torque
	17	Load meter
	32	Torque command
	33	Torque current command
1107	6	Motor speed
1108	18	Motor excitation current

Parameters referred to

Pr.30 Regenerative function selection ☞ page 539
Pr.37 Speed display, Pr.144 Speed setting switchover ☞ page 286
Pr.55 Frequency monitoring reference, Pr.56 Current monitoring reference, Pr.866 Torque monitoring reference ☞ page 297

5.8.3 Monitor display selection for terminals FM/CA and AM

The monitored statuses can be output as the following items: analog voltage (terminal AM), pulse train (terminal FM) for the FM type inverter, analog current (terminal CA) for the CA type inverter.
The signal (monitor item) to be output to terminal FM/CA and terminal AM can be selected.

Pr.	Name	Initial value FM	Initial value CA	Setting range	Description
54 M300	**FM/CA terminal function selection**	1 (output frequency)		1 to 3, 5 to 14, 17, 18, 21, 24, 34, 50, 52, 53, 61, 62, 67, 69, 70, 85, 87 to 90, 92, 93, 95, 98	Select the item monitored via terminal FM or CA.
158 M301	**AM terminal function selection**			1 to 3, 5 to 14, 17, 18, 21, 24, 34, 50, 52 to 54, 61, 62, 67, 69, 70, 86 to 96, 98	Select the item monitored via terminal AM.
55 M040	**Frequency monitoring reference**	60 Hz	50 Hz	0 to 590 Hz	Set the full-scale value when outputting the frequency monitor value to terminals FM, CA and AM.
56 M041	**Current monitoring reference**	Inverter rated current		0 to 500 A*1 0 to 3600 A*2	Enter the full-scale value of a meter which corresponds to the output via terminal FM/CA or terminal AM to monitor the output current.
866 M042	**Torque monitoring reference**	150%		0 to 400%	Enter the full-scale value of a meter which corresponds to the output via terminal FM/CA or terminal AM to monitor the motor torque.
290 M044	**Monitor negative output selection**	0		0 to 7	Set the availability of negative signals output via terminal AM, to the operation panel, and through communication. (Refer to page 296.)
291 D100	**Pulse train I/O selection**	0			

Setting range	Pulse train input (terminal JOG)	Pulse train output (terminal FM)
0	JOG signal*3	FM output*4
1	Pulse train input	FM output*4
10*4	JOG signal*3	High-speed pulse train output (50% duty)
11*4	Pulse train input	High-speed pulse train output (50% duty)
20*4	JOG signal*3	High-speed pulse train output (ON width fixed)
21*4	Pulse train input	High-speed pulse train output (ON width fixed)
100*4	Pulse train input	High-speed pulse train output (ON width fixed) Output the pulse train input without changes.

上正科技有限公司
購買、維修 此手冊零組件
電話： 037-466333
Email: service@repairtw.com
Line id: @zzzz
www.repairtw.com

*1 For the FR-F820-02330(55K) or lower and FR-F840-01160(55K) or lower.
*2 For the FR-F820-75K(03160) or higher and FR-F840-75K(01800) or higher.
*3 Function assigned to **Pr.185 JOG terminal function selection**.
*4 Valid only for the FM type inverters.

◆ Monitor description list (Pr.54, Pr.158)

- Set **Pr.54 FM/CA terminal function selection** for monitoring via terminal FM (pulse train output) or terminal CA (analog current output).
- Set **Pr.158 AM terminal function selection** for monitoring via terminal AM (analog voltage output). Negative signals can be output via terminal AM (in the range of -10 to +10 VDC). The circle in the [Negative output (-)] column indicates that the output of negative signals is available via terminal AM. (To enable or disable the output of negative signals, refer to page 288.)
- Refer to the following table and select the item to be monitored. (Refer to page 289 for the list of monitor items.)

Monitor item	Increment and unit	Pr.54 (FM/CA) Pr.158 (AM) setting	Terminal FM/CA/AM full-scale value	Negative (-) output	Remarks
Output frequency	0.01 Hz	1	**Pr.55**	○*3	

Monitor item	Increment and unit	Pr.54 (FM/CA) Pr.158 (AM) setting	Terminal FM/CA/AM full-scale value	Negative (-) output	Remarks
Output current[*2]	0.01/0.1 A[*1]	2	**Pr.56**		
Output voltage	0.1 V	3	200 V class: 400 V 400 V class: 800 V		
Frequency setting value	0.01 Hz	5	**Pr.55**		
Motor speed	1 (r/min)	6	The value converted with the **Pr.37, Pr.144** value from **Pr.55**.	○[*3]	Refer to page 286 for the monitoring of the operation speed.
Motor torque	0.1%	7	**Pr.866**	○	
Converter output voltage[*2]	0.1 V	8	200 V class: 400 V 400 V class: 800 V		
—	—	9	—		For manufacturer setting. Do not set.
Electronic thermal O/L relayLoad factor	0.1%	10	Electronic thermal O/L relay (100%)		
Output current peak value	0.01/0.1 A[*1]	11	**Pr.56**		
Converter output voltage peak value	0.1 V	12	200 V class: 400 V 400 V class: 800 V		
Input power	0.01/0.1 kW[*1]	13	Inverter rated power × 2		
Output power[*2]	0.01/0.1 kW[*1]	14	Inverter rated power × 2		
Load meter	0.1%	17	**Pr.866**		
Motor excitation current	0.01 A/0.1 A[*1]	18	**Pr.56**		
Reference voltage output	—	21	—		Terminal FM: When **Pr.291** = "0 or 1", output is 1440 pulses/s. When **Pr.291** ≠ "0 or 1", output is 50k pulses/s. Terminal CA: Output is 20 mA. Terminal AM: Output is 10 V.
Motor load factor	0.1%	24	200%		
Motor output	0.01/0.1 kW[*1]	34	Rated motor capacity		
Power saving effect	Increment and unit vary depending on the parameter settings.	50	Inverter capacity		For the information of the power saving effect monitoring, refer to page 306.
PID set point	0.1%	52	100%		Refer to page 412 for the PID control.
PID measured value	0.1%	53	100%		
PID deviation	0.1%	54[*4]	100%	○	
Motor thermal load factor	0.1%	61	Motor thermal activation level (100%)		
Inverter thermal load factor	0.1%	62	Inverter thermal activation level (100%)		
PID measured value 2	0.1%	67	100%		Refer to page 412 for the PID control.
PID input pressure value	0.1%	69	100%		Displays the input pressure value of the PID input pressure control function.
PLC function analog output	0.1%	70	100%	○	Valid by setting **Pr.414** = "1 or 2". Refer to page 462 for the PLC function.
BACnet terminal FM/CA output level	0.1%	85[*5]	100%		The value set in the Analog Output object (ID=0: Terminal FM/CA) for BACnet communication is output.
BACnet terminal AM output level	0.1%	86[*4]	100%	○	The value set in the Analog Output object (ID=1: Terminal AM) for BACnet communication is output. (The output is always negative regardless of the **Pr.290** setting when the monitored value is negative.)

上正科技有限公司
購買、維修 此手冊零組件
電話： 037-466333
Email: service@repairtw.com
Line id: @zzzz
www.repairtw.com

Monitor item	Increment and unit	Pr.54 (FM/CA) Pr.158 (AM) setting	Terminal FM/CA/AM full-scale value	Negative (-) output	Remarks
Remote output value 1	0.1%	87	1000%		Refer to page 325 for the analog remote output.
Remote output value 2	0.1%	88	1000%		
Remote output value 3	0.1%	89	1000%		
Remote output value 4	0.1%	90	1000%		
PID manipulated amount	0.1%	91*4	100%	○	Refer to page 412 for the PID control.
Second PID set point	0.1%	92	100%		
Second PID measured value	0.1%	93	100%		
Second PID deviation	0.1%	94*4	100%	○	
Second PID measured value 2	0.1%	95	100%		
Second PID manipulated amount	0.1%	96*4	100%	○	
Control circuit temperature	1°C	98	100°C	○	Terminal FM/CA: 0 to 100°C Terminal AM: -20 to 100°C

*1 The increment differs according to the inverter capacity. (FR-F820-02330(55K) or lower, FR-F840-01160(55K)or lower / FR-F820-03160(75K) or higher, FR-F840-01800(75K) or higher)

*2 The inverter regards the output current which is less than the specified current level (5% of the rated inverter current) as 0 A. Therefore, each readout of an output current and output power may show "0" if a too small-capacity motor is used as contrasted with the inverter capacity and the output current falls below the specified value.

*3 Setting of **Pr.1018 Monitor with sign selection** is required.

*4 The setting is available only in **Pr.158** (terminal AM).

*5 The setting is available only in **Pr.54** (terminal FM/CA).

◆ Frequency monitor reference (Pr.55)

上正科技有限公司
購買、維修 此手冊零組件
電話： 037-466333
Email: service@repairtw.com
Line id: @zzzz
www.repairtw.com

- Enter the full scale value of a meter used to monitor the output frequency or the frequency setting value via terminal FM/CA or terminal AM.
- For the FM type inverter, enter the full-scale value of the meter corresponding to a pulse train of 1440 pulses/s (or 50k pulses/s) output via terminal FM. Enter the frequency value (for example, 60 Hz or 120 Hz) at full scale of the meter (1 mA analog meter) installed between terminal FM and terminal SD. Pulse speed is proportional to the output frequency of the inverter. (The maximum output pulse train is 2400 pulses/s (or 55k pulses/s).)

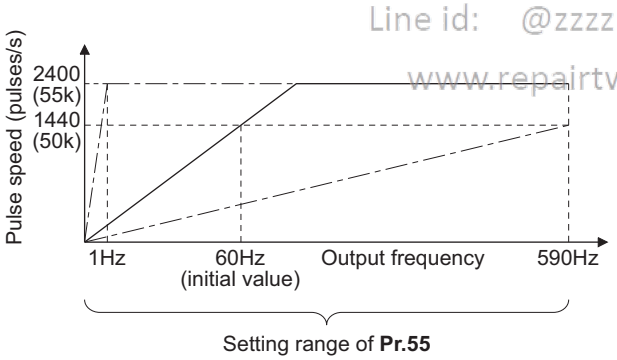

- For the CA type inverter, enter the full-scale value of the meter corresponding to a current of 20 mADC output via terminal CA. Enter the current value (for example, 60 Hz or 120 Hz) at full scale of the meter (20 mADC ammeter) installed between terminal CA and terminal 5. Output current is proportional to the frequency. (The maximum output current is 20 mADC.)

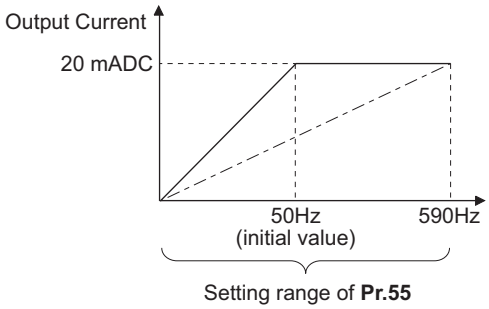

- Enter the full-scale value of the meter corresponding to a voltage of 10 VDC output via terminal AM. Enter the current value (for example, 60 Hz or 120 Hz) at full scale of the meter (10 VDC voltmeter) installed between terminal AM and terminal 5. Output voltage is proportional to the frequency. (The maximum output voltage is 10 VDC.)

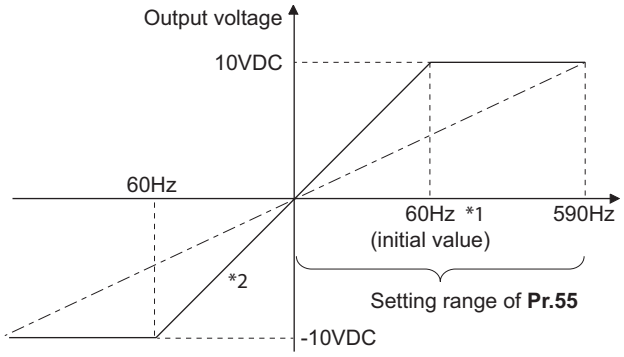

*1 FM type: 60 Hz, CA type: 50 Hz
*2 Output of negative signals enabled when **Pr.290 Monitor negative output selection** = "1 or 3"

◆ Current monitor reference (Pr.56)

- Enter the full scale value of a meter used to monitor the output current, the output current peak value, or the motor excitation current via terminal FM/CA or terminal AM.
- For the FM type inverter, enter the full-scale value of the meter corresponding to a pulse train of 1440 pulses/s (or 50k pulses/s) output via terminal FM. Enter the current value at full scale of the meter (1 mA analog meter) installed between terminal FM and terminal SD. Pulse speed is proportional to the output current monitored. (The maximum output pulse train is 2400 pulses/s (or 55k pulses/s).)
- For the CA type inverter, enter the full-scale value of the current meter corresponding to a current of 20 mADC output via terminal CA. Enter the current value at full scale of the meter (20 mADC ammeter) installed between terminal CA and terminal 5. Output current is proportional to the output current monitored. (The maximum output current is 20 mADC.)
- Enter the full-scale value of the current meter corresponding to a voltage of 10 VDC output via terminal AM. Enter the current value at full scale of the meter (10 VDC voltmeter) installed between terminal AM and terminal 5. Output voltage is proportional to the output current monitored. (The maximum output voltage is 10 VDC.)

上正科技有限公司
購買、維修 四子卅零組件
電話： 0974663321
Email service@repairtw.com
Line id @zzzz
www.repairtw.com

◆ Torque monitor reference (Pr.866)

- Enter the full scale value of a meter used to monitor the output torque via terminal FM/CA or terminal AM.
- For the FM type inverter, enter the full-scale value of the torque meter corresponding to a pulse train of 1440 pulses/s (or 50k pulses/s) output via terminal FM. Enter the torque value at full scale of the meter (1 mA analog meter) installed between terminal FM and terminal SD. Pulse speed is proportional to the torque monitored. (The maximum output pulse train is 2400 pulses/s (or 55k pulses/s).)
- For the CA type inverter, enter the full-scale value of the torque meter corresponding to a current of 20 mADC output via terminal CA. Enter the torque value at full scale of the meter (20 mADC ammeter) installed between terminal CA and terminal 5. Output current is proportional to the torque monitored. (The maximum output voltage is 20 mADC.)
- Enter the full-scale value of the torque meter corresponding to a voltage of 10 VDC output via terminal AM. Enter the torque value at full scale of the meter (10 VDC voltmeter) installed between terminal AM and terminal 5. Output voltage is proportional to the torque monitored. (The maximum output voltage is 10 VDC.)

◆ Terminal FM pulse train output (Pr.291)

- Two kinds of pulse trains can be outputted via terminal FM.
- When **Pr.291 Pulse train I/O selection** = "0 (initial value) or 1", pulse train is output via terminal FM, with a maximum output of 8 VDC and 2400 pulses/s.
  The pulse width can be adjusted on the operation panel or the parameter unit by using the calibration parameter **C0 (Pr.900) FM/CA terminal calibration**.
- A 1 mA full-scale DC ammeter or a digital meter can be used to give commands (such as inverter output frequency command).

FM output circuit

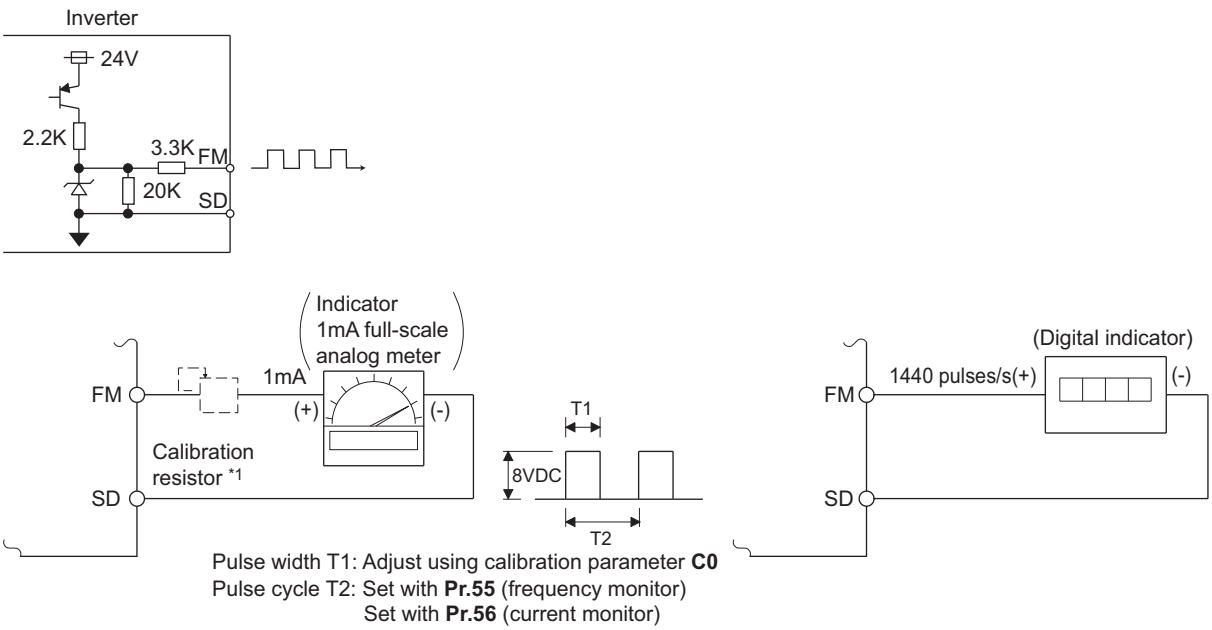

Pulse width T1: Adjust using calibration parameter **C0**
Pulse cycle T2: Set with **Pr.55** (frequency monitor)
Set with **Pr.56** (current monitor)

*1 Not needed when the operation panel or the parameter unit is used for calibration.
Use a calibration resistor when the indicator (frequency meter) needs to be calibrated by a neighboring device because the indicator is located far from the inverter.
However, the frequency meter needle may not deflect to full-scale if the calibration resistor is connected. In this case, calibrate additionally with the operation panel or parameter unit.

*2 In the initial setting, 1 mA full-scale and 1440 pulses/s terminal FM are used at 60 Hz.

上正科技有限公司
購買、維修、此手冊零組件
電話： 037-466333
Email: service@repairtw.com
Line id: @zzzz
www.repairtw.com

- When **Pr.291 Pulse train I/O selection** = "10, 11, 20, 21, or 100", this is high-speed pulse train output for open collector output. A maximum pulse train of 55k pulses/s is outputted.
  There are two types of pulse width: "50% duty" and "fixed ON width"; this cannot be adjusted with the calibration parameter **C0 (Pr.900) FM/CA terminal calibration**.

High-speed pulse train output circuit (example of connection to pulse counter)

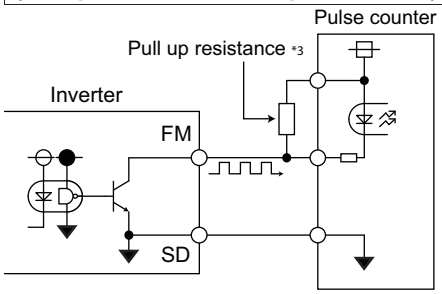

*1 The pulses may weaken due to stray capacitance in the wiring if the wiring is long, and the pulse counter will be unable to recognize the pulses.
Connect the open collector output to the power source with a pull-up resistor if the wiring is too long.
Check the pulse counter specs for the pull-up resistance.
The resistance should be at 80 mA of the load current or less.

- When **Pr.291** = "10, or 11", the pulse cycle is 50% duty (ON width and OFF width are the same).
- When **Pr.291** = "20, 21, or 100", the pulse ON width is output at a fixed width (approx. 10 μs).
- At the "100" setting, the same pulse train from the pulse train input (terminal JOG) will be outputted. This is used when running at a synchronized speed with more than one inverter. (Refer to page 245.)

Pulse of Pr.291 = "10, 11"

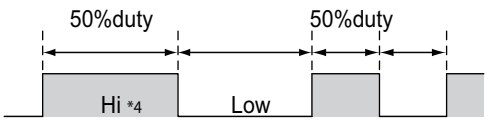

Pulse of Pr.291 = "20, 21, 100"

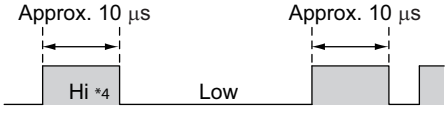

*1 "HIGH" indicates when the open collector output transistor is OFF.

Item	High-speed pulse train output specifications
Output method	NPN open collector output
Voltage between collector-emitter	30 V (max.)
Maximum permissible load current	80 mA
Output pulse rate	0 to 55k pulses/s*1
Output resolution	3 pulses/s (excluding jitter)

*1 50k pulses/s when the monitor output value is 100%.

NOTE

- Terminal JOG input specifications (pulse train input or contact input) can be selected with **Pr.291**. When changing the setting value, be careful not to change the terminal JOG input specifications. (Refer to page 245 for pulse train input.)
- Install a meter between terminals FM and SD after changing the **Pr.291** setting value. During output the pulse train via terminal FM (voltage output), be careful that voltage is not added to terminal FM.
- The meter cannot be used for the pulse input in a source logic type.
- If the All parameter clear is performed when the high-speed pulse train output is selected (**Pr.291** = "10, 11, 20, 21, or 100"), the output via terminal FM is changed from high-speed pulse train output to the voltage output because the **Pr.291** setting resets to the initial value "0". To perform the All parameter clear, remove the device connected to terminal FM first.

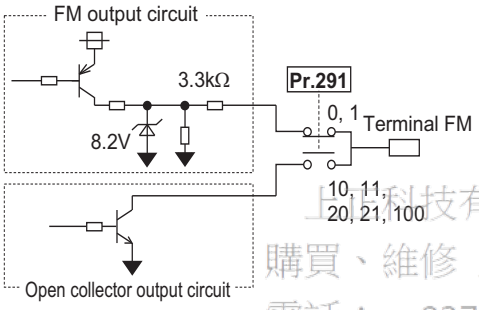

日昇科技有限公司
購買、維修 此手冊零組件
電話： 037-466333
Email: service@rtw.com.tw
Line id: @rtw
www.repairtw.com

5.8.4 Adjustment of terminal FM/CA and terminal AM

The output via terminal FM/CA or terminal AM corresponding to the full-scale value of a meter can be adjusted (calibrated) on the operation panel or the parameter unit.

Pr.	Name	Initial value	Setting range	Description
C0 (900) M310[*1]	**FM/CA terminal calibration**	—	—	Calibrates the scale of the meter connected to terminals FM and CA.
C1 (901) M320[*1]	**AM terminal calibration**	—	—	Calibrates the scale of the analog meter connected to terminal AM.
C8 (930) M330[*1]	**Current output bias signal**	0%	0 to 100%	Set the signal value at the minimum analog current output.
C9 (930) M331[*1]	**Current output bias current**	0%	0 to 100%	Set the current value at the minimum analog current output.
C10 (931) M332[*1]	**Current output gain signal**	100%	0 to 100%	Sets the signal value when the analog current output is at maximum.
C11 (931) M333[*1]	**Current output gain current**	100%	0 to 100%	Set the current value at the maximum analog current output.
867 M321	**AM output filter**	0.01 s	0 to 5 s	Set a filter for output via terminal AM.
869 M334	**Current output filter**	0.01 s	0 to 5 s	Set a filter for output via terminal CA.

*1 The parameter number in parentheses is that used (displayed) on the LCD operation panel and the parameter unit.

◆ Terminal FM calibration (C0 (Pr.900))

- The output via terminal FM is set to the pulse output. By setting **C0 (Pr.900)**, the meter connected to the inverter can be calibrated by parameter setting without use of a calibration resistor.

- The pulse train output via terminal FM can be used for digital display on a digital counter. The output is 1440 pulses/s at full scale. (Refer to page 297 for the full-scale value of each monitor item.)

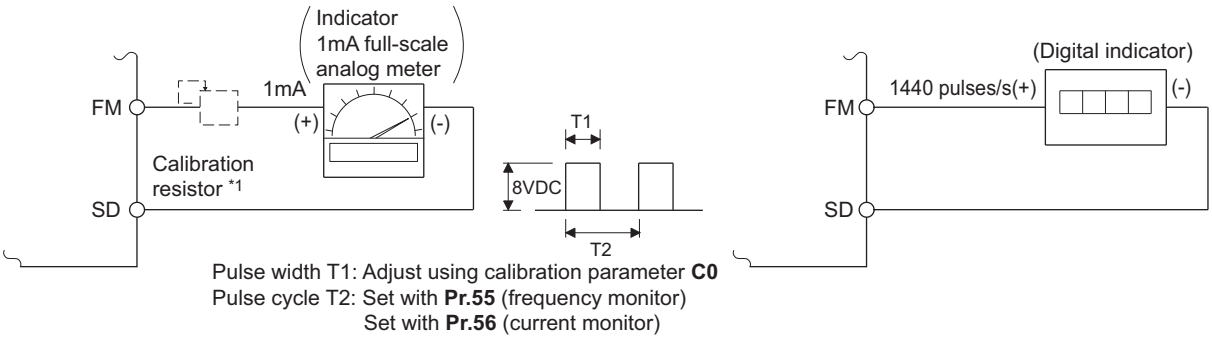

*1 Not needed when the operation panel or the parameter unit is used for calibration.
Use a calibration resistor when the indicator (frequency meter) needs to be calibrated by a neighboring device because the indicator is located far from the inverter.
However, the frequency meter needle may not deflect to full-scale if the calibration resistor is connected. In this case, perform calibration using the operation panel or parameter unit.

*2 In the initial setting, 1 mA full-scale and 1440 pulses/s terminal FM are used at 60 Hz.

5

- Calibrate the output via terminal FM in the following procedure.

1. Connect an indicator (frequency meter) across terminals FM and SD on the inverter. (Note the polarity. Terminal FM is positive.)

2. When a calibration resistor has already been connected, adjust the resistance to "0" or remove the resistor.

3. Set a monitor item in **Pr.54 AM terminal function selection**. (Refer to page 297.)
When the running frequency or inverter output current is selected on the monitor, set the running frequency or current value at which the output signal will be 1440 pulses/s, using **Pr.55 Frequency monitoring reference** or **Pr.56 Current monitoring reference** beforehand. Normally, at 1440 pulses/s the meter deflects to full-scale.

4. If the meter needle does not point to maximum even at maximum output, calibrate it with **C0 (Pr.900)**.

上正科技有限公司
買賣、維修 此手冊零組件
電話： 037-466333
Email: service@repairtw.com
Line id: @zzzz
www.repairtw.com

NOTE

- When outputting an item such as the output current, which cannot reach a 100% value easily by operation, set **Pr.54** to "21" (reference voltage output) and calibrate. A pulse train of 1440 pulses/s are output via terminal FM.
- When **Pr.310 Analog meter voltage output selection** = "21", the output via terminal AM cannot be calibrated. For the details of **Pr.310**, refer to the Instruction Manual of the FR-A8AY.
- The wiring length to terminal FM should be 200 m at maximum.
- The initial value of the calibration parameter **C0 (Pr.900)** is set to 1 mA full-scale and 1440 pulses/s terminal FM pulse train output at 60 Hz. The maximum pulse train output of terminal FM is 2400 pulses/s.
- When connecting a frequency meter between terminals FM-SD and monitoring the running frequency, it is necessary to change **Pr.55** to the maximum frequency, since the FM terminal output will be saturated at the initial value when the maximum frequency reaches 100 Hz or greater.
- Calibration with the calibration parameter **C0 (Pr.900)** cannot be done when **Pr.291 Pulse train I/O selection** = "10, 11, 20, 21, or 100" (high-speed pulse train output).

◆ Calibration procedure for terminal FM when using the operation panel (FR-DU08)

Operating procedure

1. Turning ON the power of the inverter
The operation panel is in the monitor mode.

2. Changing the operation mode

Press [PU EXT] to choose the PU operation mode. [PU] indicator turns ON.
Calibration is also possible in the External operation mode.

3. Selecting the parameter setting mode

Press MODE to choose the parameter setting mode. (The parameter number read previously appears.)

4. Calibration parameter selection

Turn ⊛ until "C. . . . " appears. Press SET to display "C -- -- -- --".

5. Selecting a parameter

Turn ⊛ until "C 0" **(C0(Pr.900) FM/CA terminal calibration)** appears. Press SET to enable the parameter setting.

The monitored value of the item (initially the output frequency) selected by **Pr.54 FM/CA terminal function selection** will appear.

6. Pulse output via terminal FM

If stopped, press FWD or REV to start the inverter operation. (To monitor the output frequency, motor connection is not required.)

When a monitor that does not require inverter operation is set in **Pr.54**, calibration is also possible during a stop status.

7. Scale adjustment

Turn ⊛ to move the meter needle to a desired position.

8. Setting completed

Press SET to confirm the selection. The monitored value and "C 0" blink alternately.

- Turn ⊛ to read another parameter.
- Press SET to return to the "C -- -- -- --" display.
- Press SET twice to show the next parameter.

上正科技有限公司
購買、維修 此手冊零組件
電話： 037-466333
Email: service@repairtw.com
Line id: @zzzz
www.repairtw.com

NOTE

- Calibration can also be made for External operation. Set the frequency in the External operation mode, and make calibration in the above procedure.
- Calibration can be performed during operation.
- For the operation from the parameter unit, refer to the Instruction Manual of the parameter unit.

◆ Terminal CA calibration (C0 (Pr.900), C8 (Pr.930) to C11 (Pr.931))

- Terminal CA is initially set to provide a 20 mADC output in the full-scale state of the corresponding monitor item. The calibration parameter **C0 (Pr.900)** allows the output current ratio (gains) to be adjusted according to the meter scale. Note that the maximum output current is 20 mADC.
- Set a value at the minimum current output in the calibration parameters **C8 (Pr.930)** and **C9 (Pr.930)**. The calibration parameters **C10 (Pr.931)** and **C11 (Pr.931)** are used to set a value at the maximum current output.
- Set the output signal values (output monitor set with **Pr.54**) at zero or at the maximum current output via terminal CA using the calibration parameters **C8 (Pr.930)** and **C10 (Pr.931)**. The full scale for each monitor is 100% at this time.

- Set the output current values (output monitor set with **Pr.54**) at zero and at the maximum current output via terminal CA (using the calibration parameters **C9 (Pr.930)** and **C11 (Pr.931)**. The output current calibrated by the calibration parameter **C0 (Pr.900)** is 100% at this time.

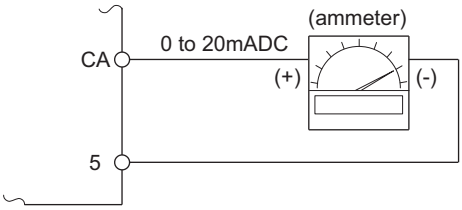

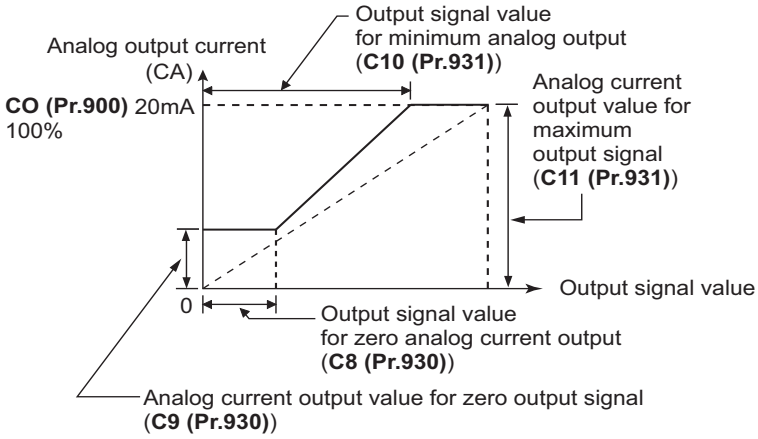

- Calibrate the output via terminal CA in the following procedure.

1. Connect a 0-20 mADC indicator (frequency meter) across terminals CA and 5 on the inverter. (Note the polarity. Terminal CA is positive.)

2. Set the initial value of the calibration parameter **C8 (Pr.930) to C11 (Pr.931)**. If the meter needle does not indicate zero when the current input is at zero, calibrate the meter using **C8 (Pr.930)** and **C9 (Pr.930)**.

3. Set a monitor item in **Pr.54 FM/CA terminal function selection**. (Refer to page 297.)
When the running frequency or inverter output current is selected on the monitor, set the running frequency or current value at which the output signal will be 20 mA, using **Pr.55** or **Pr.56** beforehand.

4. If the meter needle does not point to maximum even at maximum output, calibrate it with **C0 (Pr.900)**.

上立科技有限公司
購買、維修 此手冊電腦件
電話： 027-466333
Email: service@repairtw.com
Line Id: @3333
www.repairtw.com

NOTE

- When outputting an item such as output current, which cannot reach a 100% value easily by operation, set **Pr.54** to "21" (reference voltage output) and calibrate. A current of 20 mADC is output via terminal CA.
- When **Pr.310 Analog meter voltage output selection** = "21", the output via terminal CA cannot be calibrated. For the details of **Pr.310**, refer to the Instruction Manual of the FR-A8AY.
- The output via terminal CA is enabled even if **C8 (Pr.930)** ≥ **C10 (Pr.931)**, **C9 (Pr.930)** ≥ **C11 (Pr.931)**.

◆ Adjusting the response of terminal CA (Pr.869)

- Using **Pr.869**, the output voltage response of terminal CA can be adjusted in the range of 0 to 5 seconds.
- Increasing the setting stabilizes the output via terminal CA more but reduces the response level. (Setting "0" sets the response level to 7 ms.)

◆ Calibration of terminal AM (C1 (Pr.901))

- Terminal AM is initially set to provide a 10 VDC output in the full-scale state of the corresponding monitor item. The calibration parameter **C1 (Pr.901)AM terminal calibration** allows the output voltage ratio (gains) to be adjusted according to the meter scale. Note that the maximum output voltage is 10 VDC.

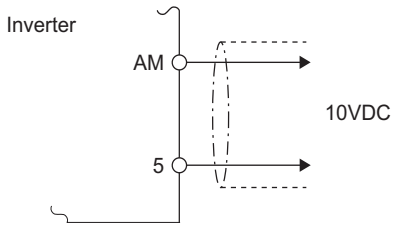

- Calibrate the output via terminal FM in the following procedure.

1. Connect a 0-10 VDC indicator (frequency meter) across terminal AM and terminal 5 on the inverter. (Note the polarity. Terminal AM is positive.)

2. Set a monitor item in **Pr.158 AM terminal function selection**. (Refer to page 297.)
When the running frequency or inverter output current is selected on the monitor, set the running frequency or current value at which the output signal is 10 V, using **Pr.55** or **Pr.56** beforehand.

3. If the meter needle does not point to maximum even at maximum output, calibrate it with **C1 (Pr.901)**.

NOTE

- When outputting an item such as the output current, which cannot reach a 100% value easily by operation, set **Pr.158** to "21" (reference voltage output) and calibrate. A voltage of 10 VDC is output via terminal AM.
- When **Pr.306 Analog output signal selection** = "21", the output via terminal AM cannot be calibrated. For the details of **Pr.306**, refer to the Instruction Manual of the FR-A8AY.
- Use **Pr.290 Monitor negative output selection** to enable negative signals output via terminal AM. The output voltage range is -10 to +10 VDC. Calibrate the maximum positive value output via terminal AM.

◆ Adjusting the response of terminal AM (Pr.867)

- Use **Pr.867** to adjust the output voltage response of the terminal AM in the range of 0 to 5 seconds.
- Increasing the setting stabilizes the output via terminal AM more but reduces the response level. (Setting "0" means the setting of the response level to 7 ms.)

Parameters referred to

Pr.54 FM/CA terminal function selection ☞ page 297
Pr.55 Frequency monitoring reference ☞ page 297
Pr.56 Current monitoring reference ☞ page 297
Pr.158 AM terminal function selection ☞ page 297
Pr.290 Monitor negative output selection ☞ page 297
Pr.291 Pulse train I/O selection ☞ page 245

5.8.5 Energy saving monitoring

From the power consumption estimated value during commercial power supply operation, the energy saving effect by use of the inverter can be monitored and output.

上誠自動化有限公司
購買 維修 此手冊零組件
電話： 037-466333
Email: service@repairtw.com
Line id: @zzzz
www.repairtw.com

Pr.	Name	Initial value	Setting range	Description
52 M100	**Operation panel main monitor selection**	0 (output frequency)	Refer to page 288.	50: Energy saving effect monitoring 51: Cumulative energy saving monitoring
774 M101	**Operation panel monitor selection 1**	9999		
775 M102	**Operation panel monitor selection 2**			
776 M103	**Operation panel monitor selection 3**			
992 M104	**Operation panel setting dial push monitor selection**	0 (set frequency)		
54 M300	**FM/CA terminal function selection**	1 (output frequency)	Refer to page 297.	50: Energy saving effect monitoring
158 M301	**AM terminal function selection**			
891 M023	**Cumulative power monitor digit shifted times**	9999	0 to 4	Set the number of times to move the digit of cumulative power monitored value. The readout peaks out at the upper limit of readout.
			9999	The function of moving the decimal point is not available. The readout is reset to 0 when it exceeds the upper limit.
892 M200	**Load factor**	100%	30 to 150%	Set the load factor for the commercial power supply operation. The setting is used for calculation of the estimated power consumption during commercial power supply operation by being multiplied by the power consumption rate (page 311).
893 M201	**Energy saving monitor reference (motor capacity)**	Inverter rated capacity	0.1 to 55 kW*1	Set the motor capacity (pump capacity). Setting this parameter is required for calculating the rate of saved power, the rate of average energy saving, and the commercial power.
			0 to 3600 kW*2	
894 M202	**Control selection during commercial power-supply operation**	0	0	Discharge damper control (fan)
			1	Inlet damper control (fan)
			2	Valve control (pump)
			3	Commercial power supply drive (fixed value)
895 M203	**Power saving rate reference value**	9999	0	Consider the commercial power as 100%.
			1	Consider the power set in **Pr.893** as 100%
			9999	No function
896 M204	**Power unit cost**	9999	0 to 500	Set the power unit cost. Setting this parameter is required for displaying the energy cost savings in the energy saving monitoring.
			9999	No function
897 M205	**Power saving monitor average time**	9999	0	The time period for averaging is 30 minutes.
			1 to 1000 h	Set the number of hours for averaging.
			9999	No function
898 M206	**Power saving cumulative monitor clear**	9999	0	Clear the cumulative monitor value
			1	Hold the cumulative monitor value
			10	Continue accumulation (upper limit communication data is 9999)
			9999	Continue accumulation (upper limit communication data is 65535)
899 M207	**Operation time rate (estimated value)**	9999	0 to 100%	Setting this parameter is required for calculating the annual energy saving. Set an annual operating rate (considering a 24-hours-a-day and 365-days-a-year operation as 100%).
			9999	No function

*1 For the FR-F820-02330(55K) or lower, and FR-F840-01160(55K) or lower.
*2 For the FR-F820-03160(75K) or higher, and FR-F840-01800(75K) or higher.

上正科技有限公司
購買、維修 此手冊零組件
電話： 037-466333
Email: service@repairtw.com
Line id: @zzzz
www.repairtw.com

◆ Energy saving monitoring list

- The items in the energy saving effect monitoring (items which can be monitored when "50" is set in **Pr.52, Pr.54, Pr.158, Pr.774 to Pr.776, and Pr.992**) are listed below.
  (The items which can be monitored via terminal FM or CA (**Pr.54** setting) and via terminal AM (**Pr.158** setting) are limited to [1 Power saving] and [3 Average power saving].)

	Energy saving monitor item	Description and formula	Unit and increment	Parameter setting			
				Pr.895	Pr.896	Pr.897	Pr.899
1	Power saving	It is the saved power, defined as the difference between the estimated power input to a motor for the commercial power supply operation and the inverter input power which is calculated from the inverter output power, determined using the following formula. (Input power for commercial power supply operation) - (Monitored value of inverter input power)	0.01/0.1 kW*3	9999	—	9999	—
2	Power saving rate	It is defined as the power saving expressed as a percentage. The rate of the power saving with respect to the estimated input power for the commercial power supply operation is determined using the following formula. $\frac{\text{[1 Power saving]}}{\text{Power during commercial power supply operation}} \times 100$	0.1%	0			
		The rate of the power saving with respect to the **Pr.893** setting is determined using the following formula. $\frac{\text{[2 Power saving]}}{\textbf{Pr.893}} \times 100$		1			
3	Average power saving	It is defined as the average hourly energy saving during a monitoring time (set in **Pr.897**). $\frac{\sum(\text{[1 Power saving]} \times \Delta t)}{\textbf{Pr.897}}$	0.01/0.1 kWh*3	9999	9999	0 to 1000 h	
4	Average power saving rate	It is defined as the average hourly energy saving expressed as a percentage. The rate of the average hourly energy saving with respect to the estimated input power for the commercial power supply operation is determined using the following formula. $\frac{\sum(\text{[2 Power saving rate]} \times \Delta t)}{\textbf{Pr.897}} \times 100$	0.1%	0			
		The rate of the average hourly energy saving with respect to the **Pr.893** setting is determined using the following formula. $\frac{\text{[3 Average power saving]}}{\textbf{Pr.893}} \times 100$		1			
5	Average power cost savings	It is defined as a monetary value of the average hourly energy saving, determined using the following formula. **[3 Average power saving] × Pr.896 setting**	0.01/0.1*3	—	0 to 500		

上正科技有限公司
購買、維修、光手冊零組件
電話： 037-466333
Email: service@repairtw.com
Line Id: @zzzz
www.repairtw.com

- The items in the cumulative energy saving monitoring (items which can be monitored when "51" is set in **Pr.52, Pr.774 to Pr.776**, and **Pr.992**) are listed below.
  (The digit of the cumulative energy saving monitored value can be moved to the right according to the setting of **Pr.891 Cumulative power monitor digit shifted times**.)

	Energy saving monitor item	Description and formula	Unit and increment	Parameter setting			
				Pr.895	Pr.896	Pr.897	Pr.899
6	Power saving amount	It is defined as a cumulative energy saving during monitoring, determined by multiplying the saved power by the number of inverter operating hours. Σ (**[1 Power saving]** × Δt)	0.01 kWh/ 0.1 kWh *1*2*3	—	9999	—	9999
7	Power cost savings	It is defined as a monetary value of the cumulative energy saving. **[6 Power saving amount] × Pr.896 setting**	0.01/ 0.1*1*3	—	0 to 500		
8	Annual power saving amount	It is defined as an estimated annual energy saving. $\frac{\text{[6 Power saving amount]}}{\text{Operation time during power saving accumulation}} \times 24 \times 365 \times \frac{\textbf{Pr.899}}{100}$	0.01 kWh/ 0.1 kWh*1*2*3	—	9999		0 to 100%
9	Annual power cost savings	It is defined as a monetary value of annual energy saving. **[8 Annual power saving amount] × Pr.896 setting**	0.01/ 0.1*1*3	—	0 to 500		

*1 For monitoring via communication (RS-485 communication, or other communication using a communication option), the increments are 1 in no units. For example, a value "10.00 kWh" is converted into "10" for communication data.
*2 On the LCD operation panel or the parameter unit, a readout is displayed in units of kilowatt-hours (kW).
*3 The increment differs according to the inverter capacity. (Increment left of a slash for FR-F820-02330(55K) or lower, FR-F840-01160(55K) or lower. Increment right of a slash for FR-F820-03160(75K) or higher, FR-F840-01800(75K) or higher.)

NOTE

- The operation panel and the parameter unit have a 5-digit display. This means, for example, that a monitored value up to 999.99 is displayed in 0.01 increments and a monitor value of 1000 or more is displayed in 0.1 increments as "1000.0". The maximum monitored value displayed is "99999".
- The maximum monitored value via communication (RS-485 communication or other communication with communication option installed) is 65535 when **Pr.898 Power saving cumulative monitor clear** = "9999". The maximum monitored value on monitoring in 0.01 increments is "655.35", and that on monitoring in 0.1 increments is "6553.5".

E.IR科技有限公司
購買・維修 此手冊零組件
電話: 886-2-27102039
Email: service@repairtw.com
Line ID: @222
www.repairtw.com

◆ Power saving real-time monitoring ([1 Power saving], [2 Power saving rate])

- During **[1 Power saving]** monitoring, an energy saving effect (power difference) of using the inverter as compared to the commercial power supply operation is calculated and displayed on the main monitor.
- In the following cases, the monitored value of **[1 Power saving]** is "0".
  The result of calculating the saved power is negative value.
  DC injection brake works.
  The motor is not connected with the inverter (monitored value of output current is 0 A).
- On **[2 Power saving rate]** monitoring, the rate of the saved power considering the consumed power (estimate) during the power supply operation as 100% is displayed when **Pr.895 Power saving rate reference value** is set to "0". When **Pr.895** is set to "1", the rate of the saved power with respect to the setting of **Pr.893 Energy saving monitor reference (motor capacity)** that is referenced as 100% is displayed.

◆ Average power saving monitoring ([3 Average power saving], [4 Average power saving rate], [5 Average power cost savings])

- The average power saving monitors are displayed by setting a value other than 9999 in **Pr.897 Power saving monitor average time**.
- On **[3 Average power saving]** monitoring, the average hourly energy saving every preset time period is displayed.

- When the setting of **Pr.897** is changed, when the inverter is powered ON, or when the inverter is reset, the averaging is restarted. The Energy saving average value updated timing (Y92) signal is inverted every time the averaging is restarted.

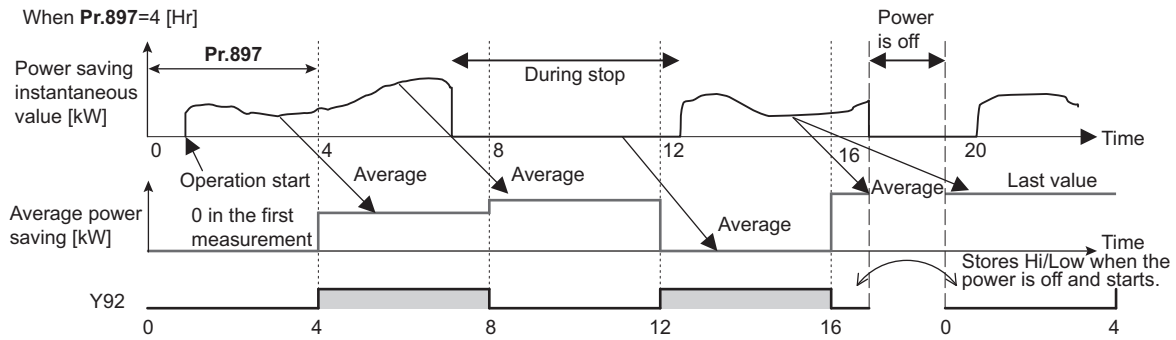

- On **[4 Average power saving rate]** monitoring, the average hourly monitored value of **[2 Power saving rate]**) is displayed when **Pr.895 Power saving rate reference value** is set to "0 or 1".
- On **[5 Average power cost savings]** monitoring, a monetary value of the average hourly energy saving (**[3 Average power saving]** × **Pr.896** setting) is displayed when the unit price, power cost per kilowatt (hour), is set in **Pr.896 Power unit cost**.

◆ Cumulative energy saving monitoring ([6 Power saving amount], [7 Power cost saving], [8 Annual power saving amount], [9 Annual power cost savings])

- The digit of the cumulative energy monitored value can be moved to the right by the number set in **Pr.891 Cumulative power monitor digit shifted times**. For example, when the cumulative energy is 1278.56 kWh and **Pr.891** is set to "2", "12.78" is displayed (in 100's of units) on the PU/DU and the communication data is converted into "12". When **Pr.891** = "0 to 4" and the cumulative energy reaches more than the upper limit of readout, the readout peaks out at the upper limit, which indicates that moving digit is necessary. When **Pr.891** = "9999" and the cumulative energy reaches more than the upper limit of readout, cumulative value is reset to 0 and the metering restarts. The readout of other items in the cumulative energy saving monitoring peaks out at the upper limit of readout.
- With the monitored value of **[6 Power saving amount]**, a cumulative energy saving during a desired time period can be measured. Follow this procedure.

上正科技有限公司
購買、維修、IC手冊零組件
電話：037-162323
Email: service@repairtw.com
Line id: @zzzz
www.repairtw.com

1. Set "10" or "9999" in **Pr.898 Power saving cumulative monitor clear**.

2. Change the setting of **Pr.898** to "0" when you want to start measuring the energy saving. The cumulative value is cleared and the cumulative energy saving meter restarts.

3. Change the setting of **Pr.898** to "1" when you want to stop measuring the energy saving. The meter stops and the cumulative value is fixed.

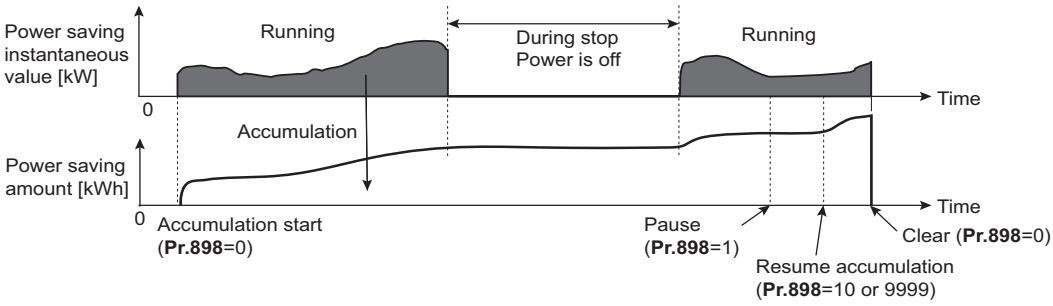

NOTE

- The cumulative value of energy saving is refreshed every hour. This means that the last cumulative value is displayed at a restart of the inverter and the cumulative meter restarts if the time elapsed between turning OFF and re-turning ON of the inverter is shorter than an hour. (In some cases, the cumulative energy value may decrease.)

◆ Estimated input power for the commercial power supply operation (Pr.892, Pr.893, Pr.894)

- Select the pattern of the commercial power supply operation from among four patterns (discharge damper control (fan), suction damper control (fan), valve control (pump) and commercial power drive), and set it in **Pr.894 Control selection during commercial power-supply operation**.
- Set the motor capacity (pump capacity) in **Pr.893 Energy saving monitor reference (motor capacity)**.
- Refer to the following graph to find the rate of power consumption (%) during commercial power supply operation based on the selected pattern and the rate of motor rotations per minute with respect to the rated speed (the result of dividing the present output frequency by **Pr.3 Base frequency** setting).

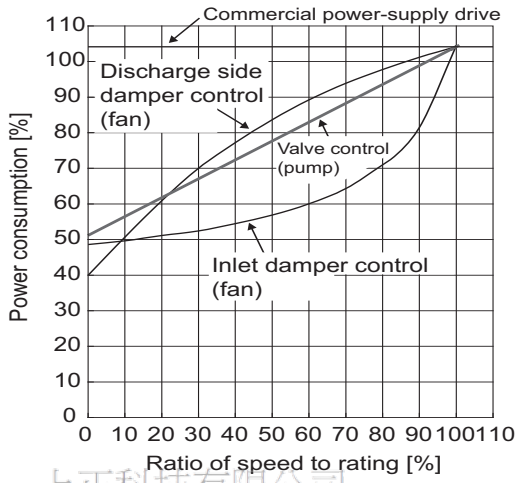

上正科技有限公司
購買、維修 此手冊零組件
電話: 037-466333
Email: service@repairtw.com
Line id: @zzzz
www.repairtw.com

- The estimated input power (kW) for the commercial power supply operation is calculated from the motor capacity set in **Pr.893**, the setting of **Pr.892 Load factor**, and the rate of power consumption using the following formula.

$$\text{Estimated consumed power during commercial power supply operation (kW)} = \textbf{Pr.893}\ (\text{kW}) \times \frac{\text{Consumed power (\%)}}{100} \times \frac{\textbf{Pr.892}\ (\%)}{100}$$

NOTE

- If the output frequency rises to the setting of **Pr.3 Base frequency** or higher, it stays at a constant value because the rotations per minute cannot rise higher than the power supply frequency during commercial power supply operation.

◆ Annual energy saving and its monetary value (Pr.899)

- When the operation time rate (ratio of the time period in year when the inverter drives the motor) [%] is set in **Pr.899**, the annual energy saving effect can be estimated.
- When the inverter is operated in specific patterns, the estimate annual energy saving can be calculated by measuring the energy saving in a certain period.
- Refer to the following procedure to set the operation time rate.

1. Estimate the average operation time per day (h/day).

2. Calculate the operation days per year (days/year) using the following formula: Average operation days per month × 12 (months).

3. Calculate the annual operation time (h/year) from values determined in Step 1 and Step 2, using the following formula.

Annual operation time (h/year) = average time (h/day) × number of operation days (days/year)

4. Calculate the operation time rate using the following formula, and set it in **Pr.899**.

$$\text{Operation time rate (\%)} = \frac{\text{Annual operation time (h/year)}}{24\ (\text{h/day}) \times 365\ (\text{days/year})} \times 100(\%)$$

NOTE

- Setting example for operation time rate: In the case where the average operation time per day is about 21 hours and the average operation days per month is 16 days.
  Annual operation time = 21 (h/day) × 16 (days/month) × 12 (months) = 4032 (h/year)

$$\text{Operation time rate (\%)} = \frac{4032\ \text{(h/year)}}{24\ \text{(h/day)} \times 365\ \text{(days/year)}} \times 100(\%) = 46.03\%$$

  Therefore, set 46.03% in **Pr.899**.

- Calculate the annual energy saving from the value of [3 Average power saving] cumulated according to the setting of **Pr.899 Operation time rate (estimated value)**.

$$\text{Annual power saving amount (kWh/year)} = \text{With } \mathbf{Pr.898} = 10 \text{ or } 9999\text{, average power saving (kW) during cumulative period} \times 24\text{h} \times 365 \text{ days} \times \frac{\mathbf{Pr.899}}{100}$$

- When the power cost per hour is set in **Pr.896 Power unit cost**, the annual energy cost savings can be monitored.
  The annual energy cost savings is determined by calculation using the following formula.

Annual power cost saving = annual power saving amount (kWh/year) × **Pr.896**

NOTE

- During regenerative driving, substitute the output power during the commercial power supply operation for the saved power (therefore, input power = 0).

Parameters referred to

Pr.3 Base frequency ☞ page 528
Pr.52 Operation panel main monitor selection ☞ page 288
Pr.54 FM/CA terminal function selection ☞ page 297
Pr.158 AM terminal function selection ☞ page 297

上正科技有限公司
購買、維修 此手冊零組件
電話： 037-400333
Email: service@repairtw.com
Line id: @zzzz
www.repairtw.com

5.8.6 Output terminal function selection

Use the following parameters to change the functions of the open collector output terminals and relay output terminals.

Pr.	Name		Initial value	Signal name	Setting range
190 M400	RUN terminal function selection	For open collector output terminal	0	RUN (Inverter running)	0 to 5, 7, 8, 10 to 19, 25, 26, 35, 39 to 42, 45 to 54, 57, 64 to 68, 70 to 80, 82, 85, 90 to 96, 98 to 105, 107, 108, 110 to 116, 125, 126, 135, 139 to 142, 145 to 154, 157, 164 to 168, 170 to 180, 182, 185, 190 to 196, 198 to 208, 211 to 213, 215, 217 to 220, 226, 228 to 230, 300 to 308, 311 to 313, 315, 317 to 320, 326, 328 to 330
191 M401	SU terminal function selection		1	SU (Up to frequency)	
192 M402	IPF terminal function selection		2*1	IPF (Instantaneous power failure/undervoltage)	
			9999*2	Function disabled.	
193 M403	OL terminal function selection		3	OL (Overload warning)	
194 M404	FU terminal function selection		4	FU (Output frequency detection)	
195 M405	ABC1 terminal function selection	For relay output terminal	99	ALM (Fault)	0 to 5, 7, 8, 10 to 19, 25, 26, 35, 39 to 42, 45 to 54, 57, 64 to 68, 70 to 80, 82, 85, 90, 91, 94 to 96, 98 to 105, 107, 108, 110 to 116, 125, 126, 135, 139 to 142, 145 to 154, 157, 164 to 168, 170 to 180, 182, 185, 190, 191, 194 to 196, 198 to 208, 211 to 213, 215, 217 to 220, 226, 228 to 230, 300 to 308, 311 to 313, 315, 317 to 320, 326, 328 to 330
196 M406	ABC2 terminal function selection		9999	No function	
313 M410*3	DO0 output selection	For terminal on the option	9999	No function	0 to 5, 7, 8, 10 to 19, 25, 26, 35, 39 to 42, 45 to 54, 57, 64 to 66, 68, 70 to 80, 85 to 96, 98 to 105, 107, 108, 110 to 116, 125, 126, 135, 139 to 142, 145 to 154, 157, 164 to 166, 168, 170 to 180, 185 to 196, 198 to 208, 211 to 213, 215, 217 to 220, 226, 228 to 230, 300 to 308, 311 to 313, 315, 317 to 320, 326, 328 to 330, 9999
314 M411*3	DO1 output selection		9999	No function	
315 M412*3	DO2 output selection		9999	No function	
316 M413*3	DO3 output selection		9999	No function	
317 M414*3	DO4 output selection		9999	No function	
318 M415*3	DO5 output selection		9999	No function	
319 M416*3	DO6 output selection		9999	No function	
320 M420*3	RA1 output selection		9999	No function	0 to 5, 7, 8, 10 to 19, 25, 26, 35, 39 to 42, 45 to 54, 57, 64 to 66, 68, 70 to 80, 85 to 91, 94 to 96, 98, 99, 200 to 208, 211 to 213, 215, 217 to 220, 226, 228 to 230, 9999
321 M421*3	RA2 output selection		9999	No function	
322 M422*3	RA3 output selection		9999	No function	

上正科技有限公司
購買、維修 此手冊零組件
電話： 037-466333
Email: service@repairtw.com
Line id: @zzzz
www.repairtw.com

Pr.	Name	Initial value	Setting range	Description
289 M431	Inverter output terminal filter	9999	5 to 50 ms	Set the time delay for the output terminal response.
			9999	No filtering of the output terminal.

*1 The initial value is for standard models and IP55 compatible models.
*2 The initial value is for separated converter types.
*3 The setting is available when the PLC function is enabled.

◆ Output signal list

- A function listed below can be set to each output terminal.
- Refer to the following table and set the parameters. (0 to 99, 200 to 299: Positive logic, 100 to 199, 300 to 399: Negative logic)

Setting		Signal name	Function	Operation	Related parameter	Refer to page
Positive logic	Negative logic					
0	100	RUN	Inverter running	Outputted during operation when the inverter output frequency reaches **Pr.13 Starting frequency** or higher.	—	318
1	101	SU	Up to frequency *1	Outputted when the output frequency reaches the set frequency.	**Pr.41**	319

Setting		Signal name	Function	Operation	Related parameter	Refer to page
Positive logic	Negative logic					
2	102	IPF	Instantaneous power failure/ undervoltage[*2]	Outputted when an instantaneous power failure or undervoltage protection operation occurs.	**Pr.57**	446, 451
3	103	OL	Overload warning	Outputted while the stall prevention function works.	**Pr.22, Pr.23, Pr.66, Pr.148, Pr.149, Pr.154**	273
4	104	FU	Output frequency detection	Outputted when the output frequency reaches the frequency set in **Pr.42** (**Pr.43** during reverse rotation) or higher.	**Pr.42, Pr.43**	319
5	105	FU2	Second output frequency detection	Outputted when the output frequency reaches the frequency set in **Pr.50** or higher.	**Pr.50**	319
7	107	For manufacturer setting. Do not set.				
8	108	THP	Electronic thermal O/L relay pre-alarm	Outputted when the cumulative electronic thermal O/L relay value reaches 85% of the trip level. (The electronic thermal O/L relay function (E.THT/E.THM) is activated when the value reaches 100%.)	**Pr.9**	252
10	110	PU	PU operation mode	Outputted when PU operation mode is selected.	**Pr.79**	228
11	111	RY	Inverter operation ready	Outputted when the reset process is completed after powering ON the inverter or when the inverter is ready to start operation with the start signal ON or during operation.	—	318
12	112	Y12	Output current detection	Outputted when the output current is higher than the **Pr.150** setting for the time set in **Pr.151** or longer.	**Pr.150, Pr.151**	321
13	113	Y13	Zero current detection	Outputted when the output current is lower than the **Pr.152** setting for the time set in **Pr.153** or longer.	**Pr.152, Pr.153**	321
14	114	FDN	PID lower limit	Outputted when the input value is lower than the lower limit set for the PID control operation.	**Pr.127 to Pr.134, Pr.575 to Pr.577, Pr.1370**	401
15	115	FUP	PID upper limit	Outputted when the input value is higher than the upper limit set for the PID control operation.		
16	116	RL	PID forward/reverse rotation output	Outputted during forward rotation operation in the PID control operation.		
17	—	MC1	Electronic bypass MC1	Used to work the electronic bypass function.	**Pr.135 to Pr.139, Pr.159**	387
18	—	MC2	Electronic bypass MC2			
19	—	MC3	Electronic bypass MC3			
25	125	FAN	Fan fault output	Outputted when a fan fault occurs.	**Pr.244**	258
26	126	FIN	Heatsink overheat pre-alarm	Outputted when the heat sink temperature rises to 85% of temperature at which the protective function of the Heatsink overheat is activated.	—	576
35	135	TU	Torque detection	Outputted when the motor torque is higher than the **Pr.864** setting.	**Pr.864**	323
39	139	Y39	Start time tuning completion	Outputted when tuning at start-up is completed.	**Pr.95, Pr.574**	382
40	140	Y40	Trace status	Outputted during trace operation.	**Pr.1020 to Pr.1047**	465
41	141	FB	Speed detection	Outputted when the actual motor rotations per minute (estimate) reaches the setting of **Pr.42 (Pr.50)**.	**Pr.42, Pr.50**	319
42	142	FB2	Second speed detection			
45	145	RUN3	Inverter running and start command ON	The signal is ON while the inverter is running or while the start command signal is ON.	—	318
46	146	Y46	During deceleration at occurrence of power failure	Outputted when the power-failure deceleration function is activated. (The signal output is retained until the function stops.)	**Pr.261 to Pr.266**	458
47	147	PID	During PID control activated	Outputted during the PID control operation.	**Pr.127 to Pr.134, Pr.575 to Pr.577**	401
48	148	Y48	PID deviation limit	Outputted when the absolute deviation value exceeds the limit value.	**Pr.127 to Pr.134, Pr.553, Pr.554**	401

上正科技有限公司
購買、維修三菱工控零組件
電話： 037-466333
Email: service@repairtw.com
Line id: @2222
www.repairtw.com

Setting		Signal name	Function	Operation	Related parameter	Refer to page
Positive logic	Negative logic					
49	149	Y49	During pre-charge operation	Outputted while the pre-charge function is working.	**Pr.127 to Pr.134, Pr.241, Pr.553, Pr.554, Pr.575 to Pr.577, Pr.753 to Pr.769, C42, C45**	425
50	150	Y50	During second pre-charge operation			
51	151	Y51	Pre-charge time over	Outputted when the time period while the pre-charge function is working reaches the time limit set in **Pr.764** or **Pr.769**.		
52	152	Y52	Second pre-charge time over			
53	153	Y53	Pre-charge level over	Outputted when the value higher than the detection level set in **Pr.763** or **Pr.768** is measured until the pre-charge function stops during pre-charge operation.		
54	154	Y54	Second pre-charge level over			
57	157	IPM	PM motor control	Outputted while the operation is performed under PM motor control.	**Pr.71 to Pr.80, Pr.998**	174
64	164	Y64	During retry	Outputted during retry operation.	**Pr.65 to Pr.69**	261
65	165	Y65	Emergency drive in operation[*2]	Outputted during emergency drive operation.	**Pr.514, Pr.515, Pr.523, Pr.524, Pr.1013**	263
66	166	ALM3	Fault output during emergency drive[*2]	Outputted when a fault occurs during emergency drive operation.		
67	167	Y67	Power failed[*3]	Outputted when the inverter power output is shut off due to power failure or undervoltage or when the power failure time deceleration-to-stop function is activated.	**Pr.261 to Pr.266**	458
68	168	EV	24 V external power supply operation	Outputted while the inverter operated with a 24 V power supplied from an external source.	—	69
70	170	SLEEP	PID output interruption	Outputted while PID output suspension function is activated.	**Pr.127 to Pr.134, Pr.575 to Pr.577**	401
71	171	RO1	Commercial power supply side motor 1 connection RO1	Outputted depending on the motor drive conditions when the multi-pump function is used.	**Pr.575 to Pr.591**	430
72	172	RO2	Commercial power supply side motor 1 connection RO2			
73	173	RO3	Commercial power supply side motor 1 connection RO3			
74	174	RO4	Commercial power supply side motor 1 connection RO4			
75	175	RIO1	Inverter side motor 1 connection RIO1			
76	176	RIO2	Inverter side motor 1 connection RIO2			
77	177	RIO3	Inverter side motor 1 connection RIO3			
78	178	RIO4	Inverter side motor 1 connection RIO4			
79	179	Y79	Pulse train output of output power	Outputted in pulses every time the cumulative value of energy outputted from the inverter reaches the **Pr.799** setting.	**Pr.799**	328
80	180	SAFE	Safety monitor output	Outputted while the safety stop function is activated.	—	70
82	182	Y82	BACnet binary output	Enables output from the Binary Output object for BACnet communication.	**Pr.549**	511
85	185	Y85	DC current feeding[*2]	Outputted during power failure or undervoltage of the AC power supply.	**Pr.30**	539
86	186	Y86	Control circuit capacitor life (for **Pr.313 to Pr.322**)[*5]	Outputted when the control circuit capacitor approaches the end of its life.	**Pr.255 to Pr.259**	208
87	187	Y87	Main circuit capacitor life (for **Pr.313 to Pr.322**)[*2*5]	Outputted when the main circuit capacitor approaches the end of its life.		
88	188	Y88	Cooling fan life (for **Pr.313 to Pr.322**)[*5]	Outputted when the cooling fan approaches the end of its life.		
89	189	Y89	Inrush current limit circuit life (for **Pr.313 to Pr.322**)[*2*5]	Outputted when the inrush current limit circuit approaches the end of its life.		
90	190	Y90	Life alarm	Outputted when any of the control circuit capacitor, main circuit capacitor, inrush current limit circuit, or the cooling fan approaches the end of its life.		

中琳科技有限公司
購買、維修此手冊零組件
電話：037-466333
Email: service@repairtw.com
Line id: @zzzz
www.repairtw.com

Setting		Signal name	Function	Operation	Related parameter	Refer to page
Positive logic	Negative logic					
91	191	Y91	Fault output 3 (Power-OFF signal)	Outputted when the Fault occurs due to an inverter circuit fault or connection fault.	—	319
92	192	Y92	Energy saving average value updated timing	Switches between ON and OFF every time the average energy saving is updated during the energy saving monitoring. This signal cannot be assigned to any of the relay output terminal (**Pr.195, Pr.196, Pr.320 to Pr.322**).	**Pr.52, Pr.54, Pr.158, Pr.891 to Pr.899**	306
93	193	Y93	Current average monitor	Outputted in pulses for transmission of the average current value and the maintenance timer value. This signal cannot be assigned to any of the relay output terminal (**Pr.195, Pr.196, Pr.320 to Pr.322**).	**Pr.555 to Pr.557**	213
94	194	ALM2	Fault output 2	Outputted when the inverter's protective function is activated to stop the power output (when the Fault occurs). The signal output continues during the inverter reset and stops after the inverter reset finishes.*6	—	319
95	195	Y95	Maintenance timer	Outputted when the value of **Pr.503** reaches the **Pr.504** setting or higher.	**Pr.503, Pr.504**	212
96	196	REM	Remote output	Outputted via a terminal by setting a proper number in a relative parameter.	**Pr.495 to Pr.497**	324
98	198	LF	Alarm	Outputted when an Alarm fault (fan fault or a communication error) occurs.	**Pr.121, Pr.244**	258, 478
99	199	ALM	Fault	Outputted when the inverter's protective function is activated to stop the power output (when the Fault occurs). The signal output stops when the inverter reset starts.	—	319
200	300	FDN2	Second PID lower limit	Outputted when the input value is lower than the lower limit set for the second PID control operation.	**Pr.753 to Pr.758**	401
201	301	FUP2	Second PID upper limit	Outputted when the input value is higher than the upper limit set for the second PID control operation.		
202	302	RL2	Second PID forward/reverse rotation output	Outputted during forward rotation operation in the second PID control operation.		
203	303	PID2	Second During PID control activated	Outputted during the second PID control operation.		
204	304	SLEEP2	During second PID output shutoff	Outputted while the second PID output suspension function is activated.	**Pr.753 to Pr.758, Pr.1147 to Pr.1149**	
205	305	Y205	Second PID deviation limit	Outputted when the absolute deviation value exceeds the limit value during the second PID control operation.	**Pr.753 to Pr.758, Pr.1145, Pr.1146**	
206	306	Y206	Cooling fan operation command	Outputted when the cooling fan operation is commanded.	**Pr.244**	258
207	307	Y207	Control circuit temperature	Outputted when the temperature of the control circuit board reaches the detection level or higher.	**Pr.663**	329
208	308	PS	PU stopped	Outputted while the PU is stopped.	**Pr.75**	188
211	311	LUP	Upper limit warning detection	Outputted when the load fault upper limit warning is detected.	**Pr.1480 to Pr.1492**	281
212	312	LDN	Lower limit warning detection	Outputted when the load fault lower limit warning is detected.		
213	313	Y213	During load characteristics measurement	Outputted during measurement of the load characteristics.		
215	315	Y215	During cleaning	Outputted during operation of the cleaning function.	**Pr.1469 to Pr.1479**	398

上正科技有限公司
購買、維修 此上網查詢
電話： 02-2796-6333
Email: service@repairtw.com
Line Id: @2222
www.repairtw.com

Setting		Signal name	Function	Operation	Related parameter	Refer to page
Positive logic	Negative logic					
217	317	Y217	Priming pump operation	Outputted to start the priming pump.	**Pr.1363**	439
218	318	STIR	Stirring	Outputted during the stirring operation.	**Pr.1364, Pr.1365**	
219	319	Y219	PID upper/lower limit pre-warning	Outputted when the PID measured value meets the requirements of the limit pre-warning signal output conditions.	**Pr.1370 to Pr.1373**	
220	320	Y220	Second PID upper/lower limit pre-warning			
226	326	Y226	Auxiliary pressure pump operation	Outputted when the PID deviation exceeds the auxiliary pressure pump operation starting level.	**Pr.1374, Pr.1375**	
228	328	DRY	Dry run	Outputted when a dry-run state is detected.	**Pr.42, Pr.43, Pr.132, Pr.1144, Pr.1370**	
229	329	Y229	PID input pressure warning	Outputted when the pump inlet pressure reaches the warning level.	**Pr.1370, Pr.1373, Pr.1377, Pr.1378, Pr.1380**	
230	330	Y230	PID input pressure fault	Outputted when the pump inlet pressure reaches the fault level.	**Pr.1370, Pr.1377, Pr.1379, Pr.1381**	
9999		—	No function	—	—	—

*1 Note that changing the frequency setting with an analog signal or the setting dial on the operation panel (FR-DU08) may cause the turning ON and OFF of the Up to frequency (SU) signal depending on its changing speed and the timing of the speed change determined by the acceleration/deceleration time setting. (The signal state changing does not occur when the acceleration/deceleration time is set to 0 seconds.)

*2 The setting is available for the standard structure model and the IP55 compatible model.

*3 This signal cannot be assigned to any of the output terminals for plug-in options (FR-A8AY and FR-A8AR).

*4 Available when the plug-in option is connected.

*5 This signal is available when the PLC function is enabled, or when an option (FR-A8AY, FR-A8AR, FR-A8NC, or FR-A8NCE) is installed. Use **Pr.313 to Pr.322** to assign the function to the terminal. For the information of the availability of these parameters for each option, refer to the Instruction Manual of the option.

*6 On restarting the inverter, the Fault output 2 (ALM2) signal turns OFF at the time the inverter power turns OFF.

上正科技有限公司
購買、維修 此手冊零組件
電話： 037-466333
Email: service@repairtw.com
Line id: @zzzz
www.repairtw.com

NOTE

- One function can be assigned to more than one terminal.
- The function works during the terminal conducts when the parameter setting is any of "0 to 99, 200 to 299", and the function works during the terminal does not conduct when the setting is "100 to 199, 300 to 399".
- When **Pr.76 Fault code output selection** = "1", the outputs of terminals SU, IPF, OL, and FU are used only for outputting the fault code according to the **Pr.76** setting. (When the inverter's protective function is activated, the signal for the fault code is output.)
- The output of terminal RUN and the outputs of the relay output terminals are not affected by the **Pr.76** setting.
- Changing the terminal assignment using **Pr.190 to Pr.196 (Output terminal function selection)** may affect the other functions. Set parameters after confirming the function of each terminal.
- Do not assign the signal to terminals A1, B1, and C1 or terminals A2, B2, and C2 which frequently changes its state between ON and OFF. Otherwise, the life of the relay contact may be shortened.

◆ Adjusting the output terminal response level (Pr.289)

- The responsivity of the output terminals can be delayed in a range between 5 to 50 ms. (The following is the operation example of the RUN signal.)

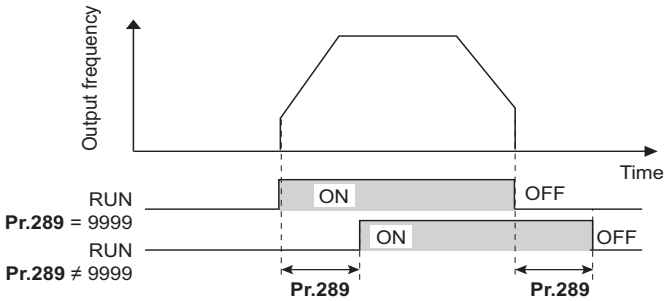

NOTE

- When **Pr.157 OL signal output timer** is set for the Overload warning (OL) signal output, the OL signal is output when the set time of (**Pr.157 + Pr.289**) elapses.
- The signal output for the PLC function (see page 462) and for the fault code output (see page 325) are not affected by the **Pr.289** setting (not filtered for responsivity).

◆ Inverter operation ready signal (RY signal) and Inverter running signals (RUN and RUN3 signals)

- When the inverter is ready for operation, the Inverter operation ready (RY) signal turns ON (and stays ON during operation).
- When the inverter output frequency reaches the setting of **Pr.13 Starting frequency** or higher, the Inverter running (RUN) signal turns ON. The signals are OFF while the inverter is stopped or during the DC injection brake operation.
- The Inverter running and start command ON (RUN3) signal is ON while the inverter is running or while the start command signal is ON (When the start command signal is ON, the RUN3 signal is ON even while the inverter's protective function is activated or while the MRS signal is ON.) The RUN3 signal is ON even during the DC injection brake operation, and the signal is OFF when the inverter stops.

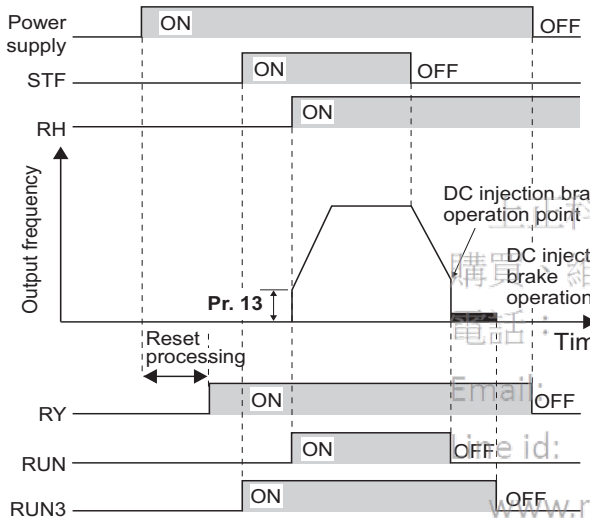

上達科技有限公司
購買維修 此手冊零組件
電話：037-466333
Email: service@repairtw.com
line id: @zzzz
www.repairtw.com

- The ON/OFF state of each signal according to the inverter operating status is shown in the matrix below.

Output signal	Start signal OFF (inverter stopped)	Start signal ON (inverter stopped)	Start signal ON (inverter running)	DC injection brake operation	Inverter output shutoff*2		Automatic restart after instantaneous power failure		
							During coasting		Inverter running after restart
					Start signal ON	Start signal OFF	Start signal ON	Start signal OFF	
RY*3	ON	ON	ON	ON	OFF		ON*1		ON
RUN	OFF	OFF	ON	OFF	OFF		OFF		ON
RUN3	OFF	ON	ON	ON	ON	OFF	ON	OFF	ON

*1 The signal is OFF during power failure or undervoltage.
*2 This means the state during a fault occurrence or while the MRS signal is ON, etc.
*3 The signal is OFF while power is not supplied to the main circuit.

- To use the RY, RUN, or RUN3 signal, set the corresponding number selected from the following table in any of **Pr.190 to Pr.196 (Output terminal function selection)** to assign the function to an output terminal.

Output signal	Pr.190 to Pr.196 settings	
	Positive logic	Negative logic
RY	11	111
RUN	0	100
RUN3	45	145

NOTE

- The RUN signal (positive logic) is initially assigned to the terminal RUN.

◆ Fault (ALM) signal and Fault output 2 (ALM2) signal

- The fault signal (ALM or ALM2 signal) is output when an inverter protective function is activated.
- The ALM2 signal stays ON during the resetting the inverter after the Fault occurs.
- To use the ALM2 signal, set "94 (positive logic) or 194 (negative logic)" in any of **Pr.190 to Pr.196 (Output terminal function selection)** to assign the function to an output terminal.
- The ALM signal is initially assigned to the relay terminals A1, B1, and C1.

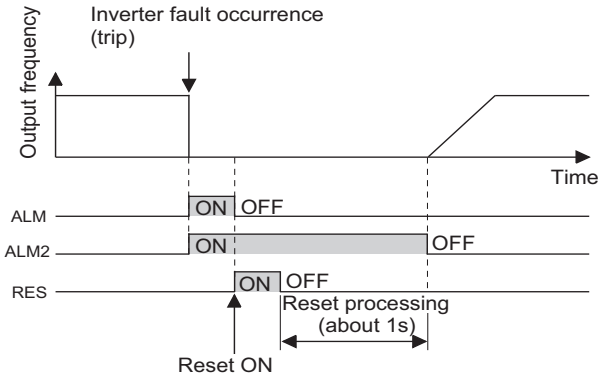

NOTE

- For the details of the inverter faults, refer to page 568.

上正科技有限公司
購買、維修 此手冊零組件
電話： 037-466333
Email: service@repairtw.com
www.repairtw.com

◆ Input power shutoff like magnetic contactor (Y91 signal)

- The Fault output 3 (Y91) signal is output when a fault originating in the inverter circuit or a connection fault occurs.
- To use the Y91 signal, set "91 (positive logic) or 191 (negative logic)" in any of **Pr.190 to Pr.196 (Output terminal function selection)** to assign the function to an output terminal.
- The following is the list of faults that output the Y91 signal. (For the details of faults, refer to page 568.)

Fault type
Inrush current limit circuit fault (E.IOH)
CPU fault (E.CPU)
CPU fault (E.6)
CPU fault (E.7)
Parameter storage device fault (E.PE)
Parameter storage device fault (E.PE2)
24 VDC power fault (E.P24)
Operation panel power supply short circuit/RS-485 terminals power supply short circuit (E.CTE)
Output side earth (ground) fault overcurrent (E.GF)
Output phase loss (E.LF)
Internal circuit fault (E.BE)
Internal circuit fault (E.13/E.PBT)

◆ Changing the special relay function for the PLC function

- For the PLC function, the function of special relays (SM1225 to SM1234) can be changed by setting **Pr.313 to Pr.322**. (For the details of the PLC function, refer to the PLC Function Programming Manual.)

Parameters referred to

Pr.13 Starting frequency ☞ page 225, page 226
Pr.76 Fault code output selection ☞ page 327

5.8.7 Output frequency detection

If the inverter output frequency which reaches a specific value is detected, the relative signal is output.

Pr.	Name	Initial value		Setting range	Description
		FM	CA		
41 **M441**	**Up-to-frequency sensitivity**	10%		0 to 100%	Set the level where the SU signal turns ON.
42 **M442**	**Output frequency detection**	6 Hz		0 to 590 Hz	Set the frequency at which the FU (or FB) signal turns ON.
43 **M443**	**Output frequency detection for reverse rotation**	9999		0 to 590 Hz	Set the frequency at which the FU (or FB) signal turns ON only while the motor rotates in reverse direction.
				9999	The frequency same as the **Pr.42** setting is set.
50 **M444**	**Second output frequency detection**	30 Hz		0 to 590 Hz	Set the frequency at which the FU2 (or FB2) signal turns ON.
870 **M400**	**Speed detection hysteresis**	0 Hz		0 to 5 Hz	Set the hysteresis width for the detected frequency.

◆ Setting the notification zone of the output frequency reaching the set point (SU signal, Pr.41)

- The Up to frequency (SU) signal is output when the output frequency reaches the set frequency.
- Set the value in the range of 1 to 100% in **Pr.41** to determine tolerance for the set frequency (considered as 100% point).
- It may be useful to use this signal to start operating related equipment after checking that the set frequency has been reached.

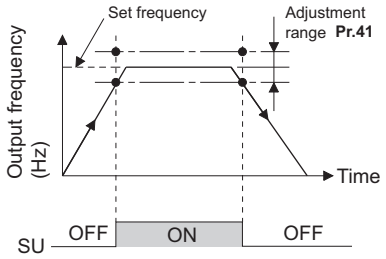

上正科技有限公司
購買、維修 此手冊零組件
電話： 037-466333
Email: service@repairtw.com
Line Id: @2222
www.repairtw.com

◆ Output frequency detection (FU (FB) signal, FU (FB2) signal, Pr.42, Pr.43, Pr.50)

- The Output frequency detection (FU/FU2) signal or the Speed detection (FB/FB2) signal is useful for applying or releasing electromagnetic brake, etc.
- The FU signal is output when the output frequency (frequency command value) reaches or exceeds the **Pr.42** setting.
- During PM motor control, the FB signal is output when the estimated actual motor rotations per minute reaches the **Pr.42** setting. Under V/F control and Advanced magnetic flux vector control, the FU signal and the FB signal are output at the same time.
- The frequency detection dedicated to motor rotation in reverse direction is enabled by setting the frequency in **Pr.43**.
- When **Pr.43** ≠ "9999", the **Pr.42** setting is for the forward rotation operation and the **Pr.43** setting is for the reverse rotation operation.
- When a different detection point of the frequency is required, **Pr.50** is available. The FU2 (or FB2) signal can be set to be output when the output frequency reaches the **Pr.50** setting or higher.

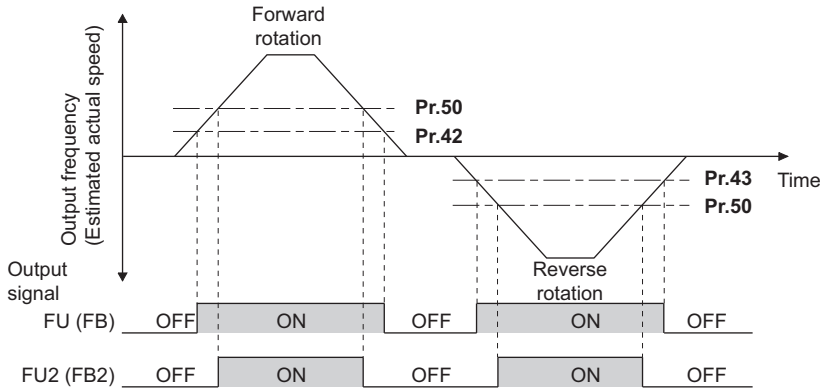

- To use each signal, set the corresponding number selected from the following table in any of **Pr.190 to Pr.196 (Output terminal function selection)** to assign the function to an output terminal.

Output signal	Pr.190 to Pr.196 settings		Related Parameter
	Positive logic	Negative logic	
FU	4	104	42, 43
FB	41	141	
FU2	5	105	50
FB2	42	142	

◆ Speed detection hysteresis (Pr.870)

- Setting the hysteresis width for the detected frequency prevents chattering of the Speed detection (FB) signal. When an output frequency fluctuates, the Up to frequency (SU) signal and the Output frequency detection signals (FB and FB2) may chatter (turns ON and OFF repeatedly).
  Setting hysteresis to the detected frequency prevents chattering of these signals.

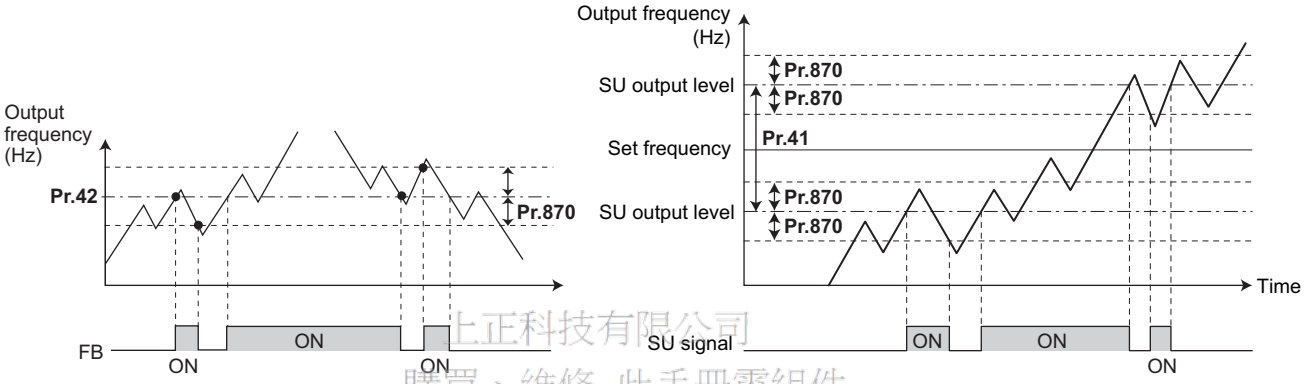

Example of the speed detection (FB) signal

Example of the up to frequency (SU) signal

上正科技有限公司
購買、維修 此手冊零組件
電話： 037-466333
Email: service@repairtw.com
Line id: @ssz
www.repairtw.com

NOTE

- In the initial setting, the FU signal is assigned to terminal FU, and the SU signal is assigned to terminal SU.
- All signals shown in the following table are OFF during the DC injection brake operation and during tuning at start-up.
- The reference frequency in comparison with the set frequency differs depending on the control method.

Control method or function	Reference frequency	
	FU, FU2	FB, FB2, SU
V/F control	Output frequency	Output frequency
Advanced magnetic flux vector control	Output frequency before the slip compensation	Output frequency before the slip compensation
PM motor control	Frequency command value	Estimated frequency (actual motor speed)

- Setting a higher value in **Pr.870** causes a lower responsivity of the signals for frequency detection (SU, FB, and FB2 signals).
- Changing the terminal assignment using **Pr.190 to Pr.196 (Output terminal function selection)** may affect the other functions. Set parameters after confirming the function of each terminal.

Parameters referred to

Pr.190 to Pr.196 (Output terminal function selection) ☞ page 312

5.8.8 Output current detection function

If the inverter output current which reaches a specific value is detected, the relative signal is output via an output terminal.

Pr.	Name	Initial value		Setting range	Description
		FM	CA		
150 **M460**	**Output current detection level**	120%	110%	0 to 400%	Set the level to detect the output current. Consider the value of the rated inverter current as 100%.
151 **M461**	**Output current detection signal delay time**	0 s		0 to 10 s	Set the timing to detect the output current. Enter the delay time between the time when the output current reaches the set current or higher and the time when the Output current detection (Y12) signal is output.
152 **M462**	**Zero current detection level**	5%		0 to 400%	Set the level to detect the zero current. Consider the value of the inverter rated current as 100%.
153 **M463**	**Zero current detection time**	0.5 s		0 to 10 s	Set the time from the time when the output current drops to the **Pr.152** setting or lower to the time when the Zero current detection (Y13) signal is output.
166 **M433**	**Output current detection signal retention time**	0.1 s		0 to 10 s	Set the retention time period during which the Y12 signal is ON.
				9999	The Y12 signal is retained ON. The signal turns OFF at the next start-up of the inverter.
167 **M464**	**Output current detection operation selection**	0		0, 1, 10, 11	Select the inverter operation at the time when the Y12 signal and the Y13 signal turn ON.

◆ Output current detection (Y12 signal, Pr.150, Pr.151, Pr.166, Pr.167)

- The output current detection function is useful for overtorque detection.
- If the inverter output during inverter running remains higher than the **Pr.150** setting for the time set in **Pr.151** or longer, the Output current detection (Y12) signal is output from the inverter's open collector or the relay output terminal.
- When the Y12 signal turns ON, the ON state is retained for the time set in **Pr.166**.
- When **Pr.166** = "9999", the ON state is retained until the next start-up of the inverter.
- Setting **Pr.167** = "1" while the Y12 signal is ON does not cause the fault E.CDO. The **Pr.167** setting becomes valid after the Y12 signal is turned OFF.
- To use the Y12 signal, set "12 (positive logic) or 112 (negative logic)" in any of **Pr.190 to Pr.196 (Output terminal function selection)** to assign the function to the output terminal.
- Use **Pr.167** to select the inverter operation at the time when Y12 signal turns ON, whether the inverter output stops or the inverter operation continues.

上正科技有限公司
購買、維修 此手冊零組件
電話: 037-466333
Email: service@repairtw.com
Line id: @zzzz
www.repairtw.com

Pr.167 setting	When the Y12 signal turns ON	When the Y13 signal turns ON
0 (initial value)	Operation continues.	Operation continues.
1	Operation stops by fault (E.CDO).	Operation continues.
10	Operation continues.	Operation stops by fault (E.CDO).
11	Operation stops by fault (E.CDO).	Operation stops by fault (E.CDO).

Pr.166 ≠ "9999", **Pr.167** = "0"

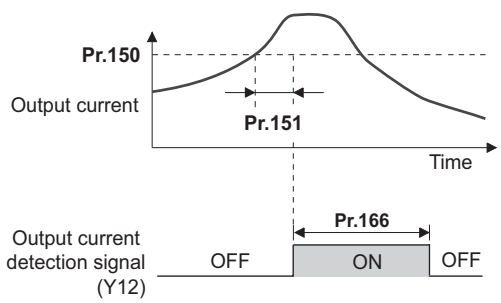

◆ Zero current detection (Y13 signal, Pr.152, Pr.153)

- If the inverter output during inverter running remains higher than the **Pr.152** setting for the time set in **Pr.153** or longer, the Zero current detection (Y13) signal is output from the inverter's open collector or the relay output terminal.
- Once the Zero current detection (Y13) signal turns ON, the signal is retained ON for at least 0.1 seconds.
- If the inverter output current drops to zero, slippage due to gravity may occur, especially in a lift application, because the motor torque is not generated. To prevent this, the Y13 signal can be output from the inverter to apply the mechanical brake at zero current output.

- To use the Y13 signal, set "13 (positive logic) or 113 (negative logic)" in any of **Pr.190 to Pr.196 (Output terminal function selection)** to assign the function to the output terminal.
- Use **Pr.167** to select the inverter operation at the time when Y13 signal turns ON, whether the inverter output stops or the inverter operation continues.

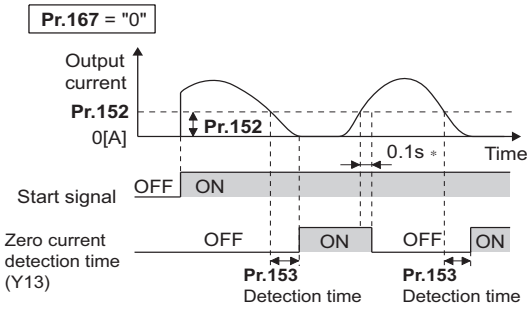

* When the output is restored to the **Pr.152** level, the Y13 signal is turned OFF after 0.1 s.

NOTE

- This function is enabled during online or offline auto tuning.
- The response time of the Y12 and Y13 signals is approximately 0.1 seconds. However, the response time varies according to the load condition.
- When **Pr.152** = "0", the zero current detection function is disabled.
- Changing the terminal assignment using **Pr.190 to Pr.196 (Output terminal function selection)** may affect the other functions. Set parameters after confirming the function of each terminal.

⚠CAUTION

- The setting of the zero current detection level should not be too low, and the setting of the zero current detection time should not be too long. Doing so may cause the signal for the zero current detection not to be outputted when the output current is very low and the motor torque is not generated.
- A safety backup such as an emergency brake must be provided to prevent machines or equipment in hazardous conditions even if the Zero current detection is used.

上正科技有限公司
購買、維修 此手冊零組件
電話： 0971163338
Email: service@repairtw.com
Line Id: @zzzz
www.repairtw.com

Parameters referred to

Online auto tuning ☞ page 382
Offline auto tuning ☞ page 366, page 375
Pr.190 to Pr.196 (Output terminal function selection) ☞ page 312

5.8.9 Output torque detection function

Magnetic flux PM

If the motor torque which reaches a specific value is detected, the relative signal is output.
The signal is useful for applying or releasing electromagnetic brake, etc.

Pr.	Name	Initial value	Setting range	Description
864 **M470**	**Torque detection**	150%	0 to 400%	Set a value of the torque at which the TU signal turns ON.

- The Torque detection (TU) signal turns ON when the motor output torque reaches the value of torque set in **Pr.864** or higher. The TU signal turns OFF when the motor output torque drops lower than the set value.
- **Pr.864** is not available under V/F control.

- To use the TU signal, set "35 (positive logic) or 135 (negative logic)" in one of **Pr.190 to Pr.196 (Output terminal function selection)** to assign the function to the output terminal.

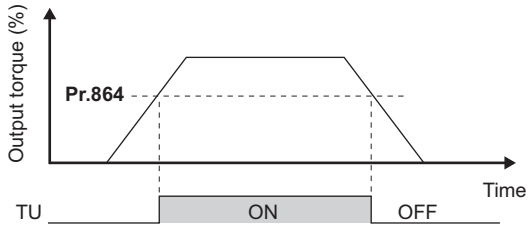

NOTE

- Changing the terminal assignment using **Pr.190 to Pr.196 (Output terminal function selection)** may affect the other functions. Set parameters after confirming the function of each terminal.

Parameters referred to

Pr.190 to Pr.196 (Output terminal function selection) ☞ page 312

5.8.10 Remote output function

The signal can be turned ON or OFF via the output terminal on the inverter as if the terminal is the remote output terminal for a programmable controller.

Pr.	Name	Initial value	Setting range	Description	
495 **M500**	**Remote output selection**	0	0	Remote output data is cleared when the inverter power is turned OFF.	Remote output data is cleared during an inverter reset.
			1	Remote output data is retained even after the inverter power is turned OFF.	
			10	Remote output data is cleared when the inverter power is turned OFF.	Remote output data is retained during an inverter reset.
			11	Remote output data is retained even after the inverter power is turned OFF.	
496 **M501**	**Remote output data 1**	0	0 to 4095	Set a decimal number to enter a binary number in every bit corresponding to each of the output terminals on the inverter.	
497 **M502**	**Remote output data 2**	0	0 to 4095	Set a decimal number to enter a binary number in every bit corresponding to each of the output terminals on the option FR-A8AY or FR-A8AR.	

上正科技有限公司
購買、維修 此手冊專屬軟件
電話： 037-462939
Email: service@repairtw.com
Line id: @zzzz
www.repairtw.com

◆ Remote output setting (REM signal, Pr.496, Pr.497)

- The signal assigned to each of the output terminal can be turned ON or OFF according to the settings of **Pr.496** and **Pr.497**. The signal assigned to each of the remote output terminal can be turned ON or OFF through communication via the PU connector, via the RS-485 terminals, or via a communication option.
- To use the Remote output (REM) signal, set "96 (positive logic) or 196 (negative logic)" in any of **Pr.190 to Pr.196 (Output terminal function selection)** to assign the function to the terminal.
- Refer to the following figures to check correspondences between the bit and the actual terminal. When "1" is set in the bit corresponding to the terminal to which the REM signal assigned by setting a number in **Pr.496** and **Pr.497** each, the signal turns ON (or OFF in negative logic setting). Also, setting "0" allows the signal to turn OFF (or ON in negative logic setting).
- For example, when **Pr.190 RUN terminal function selection** = "96" (positive logic) and "1" (H01) is set in **Pr.496**, the REM signal assigned to terminal RUN turns ON.

Pr.496

b11											b0
*1	*1	*1	*1	*1	ABC2	ABC1	FU	OL	IPF	SU	RUN

Pr.497

b11											b0
*1	*1	RA3 *3	RA2 *3	RA1 *3	Y6 *2	Y5 *2	Y4 *2	Y3 *2	Y2 *2	Y1 *2	Y0 *2

*1 Any value
*2 Y0 to Y6 are available when the output-extending option (FR-A8AY) is installed.
*3 RA1 to RA3 are available when the relay output option (FR-A8AR) is installed.

◆ Remote output data retention (REM signal, Pr.495)

- When the inverter power is reset (or a power failure occurs) while **Pr.495** = "0 (initial value) or 10", the REM signal setting is cleared. (The ON/OFF state of the signal assigned to each terminal is determined by the settings in **Pr.190 to Pr.196**.) The settings in **Pr.496** and **Pr.497** are reset to "0".
- When **Pr.495** = "1 or 11", the remote output data is stored in EEPROM before the inverter power is turned OFF. This means that the signal output setting after power restoration is the same as that before the power was turned OFF. However, when **Pr.495** = "1", the data during an inverter reset (terminal reset or reset request via communication) is not saved.
- When **Pr.495** = "10 or 11", the remote output data in the signal before the reset is stored even during an inverter reset.

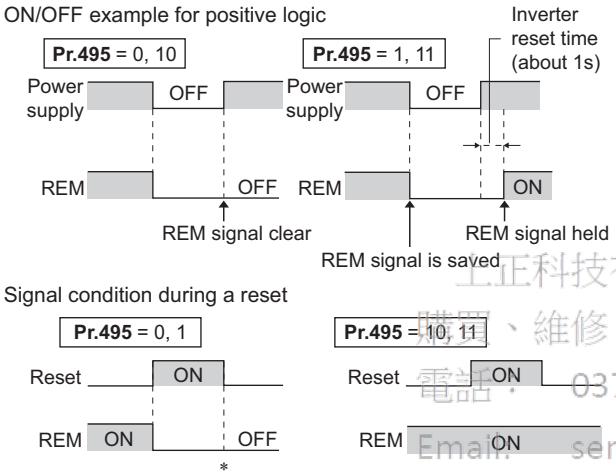

* When **Pr.495** = "1", the signal condition saved in EEPROM (condition of the last power OFF) is applied.

上正科技有限公司
購買、維修 此手冊零組件
電話： 037-466333
Email: service@repairtw.com
Line id: @zzzz
www.repairtw.com

NOTE

- The output terminal to which the REM signal is not assigned by using **Pr.190 to Pr.196** does not turn ON or OFF when "1 or 0" is set in bit corresponding to each of the terminals by using **Pr.496** and **Pr.497**. (ON/OFF command affects only the terminal to which the REM signal is assigned.)
- When **Pr.495** = "1 or 11" (remote output data retained at power OFF), take measures to keep the control circuit power ON, such as connecting terminal R1/L11 with terminal P/+ and connecting terminal S1/L21 with terminal N/- . If the control power is not retained, the output signal after the inverter power turns ON is not guaranteed to work. When the high power factor converter (FR-HC2) or the converter unit (FR-CC2) is connected to the inverter, assign the FR-HC2/FR-CC2 connection, instantaneous power failure detection (X11) signal to an input terminal and input the IPF signal from the FR-HC2/FR-CC2 to the inverter via the terminal to which the X11 signal is assigned.

Parameters referred to

Pr.190 to Pr.196 (Output terminal function selection) ☞ page 312

5.8.11 Analog remote output function

An analog value can be output via the analog output terminal on the inverter.

Pr.	Name	Initial value	Setting range	Description	
655 **M530**	**Analog remote output selection**	0	0	Remote output data is cleared when the inverter power is turned OFF.	Remote output data is cleared during an inverter reset.
			1	Remote output data is retained even after the inverter power is turned OFF.	
			10	Remote output data is cleared when the inverter power is turned OFF.	Remote output data is retained during an inverter reset.
			11	Remote output data is retained even after the inverter power is turned OFF.	
656 **M531**	**Analog remote output 1**	1000%	800 to 1200%	Value output via the terminal for which "87" is set in the terminal function selection parameter (**Pr.54 or Pr.158**)	Set the analog value outputted via terminal FM or CA, via terminal AM, and via the analog output terminal on the option FR-A8AY.
657 **M532**	**Analog remote output 2**	1000%	800 to 1200%	Value output via the terminal for which "88" is set in the terminal function selection parameter (**Pr.54 or Pr.158**)	
658 **M533**	**Analog remote output 3**	1000%	800 to 1200%	Value output via the terminal for which "89" is set in the terminal function selection parameter (**Pr.54 or Pr.158**)	
659 **M534**	**Analog remote output 4**	1000%	800 to 1200%	Value output via the terminal for which "90" is set in the terminal function selection parameter (**Pr.54 or Pr.158**)	

◆ Analog remote output (Pr.656 to Pr.659)

- The analog signal of the value set in **Pr.656 to Pr.659 (Analog remote output)** can be output via terminal FM or CA, terminal AM and the analog output terminal on the option FR-A8AY.
- When **Pr.54 FM/CA terminal function selection** = "87, 88, 89, or 90" (Remote output value), the type FM inverter can output a pulse train via terminal FM.
- For FM output (when **Pr.291 Pulse train I/O selection** = "0 (initial value) or 1"):
  Terminal FM output [pulses/s] = 1440 [Hz] × (Analog remote output value - 1000)/100
  Where the output range is 0 to 2400 pulses/s.
- For high-speed pulse output (when **Pr.291 Pulse train I/O selection** = "10, 11, 20, or 21"):
  Terminal FM output [pulses/s] = 50k [Hz] × (Analog remote output value - 1000)/100
  Where the output range is 0 to 55k pulses/s.

上正科技有限公司
購買、維修 此手冊零組件
電話： 037-466333
Email: service@repairtw.com
Line id: @zzzz
www.repairtw.com

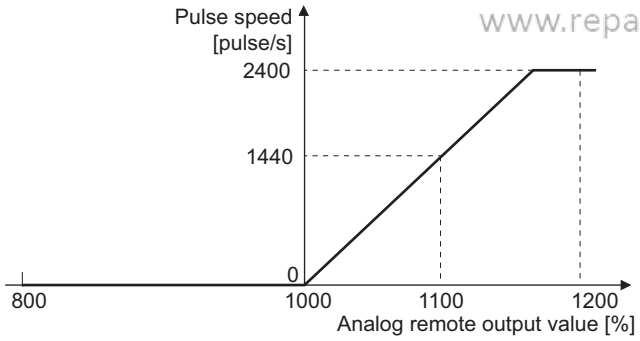

Terminal FM (FM output)

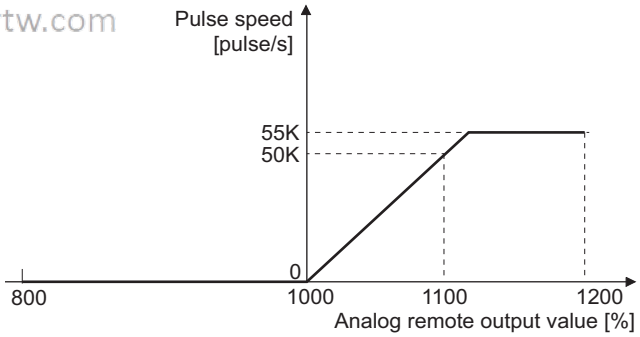

Terminal FM (High-speed pulse train output)

- When **Pr.54 FM/CA terminal function selection** = "87, 88, 89, or 90" (remote output), the type CA inverter can output any analog current via terminal CA.
- Terminal CA output [mA] = 20 [mA] × (Analog remote output value - 1000)/100
  Where the output range is 0 to 20 mA.

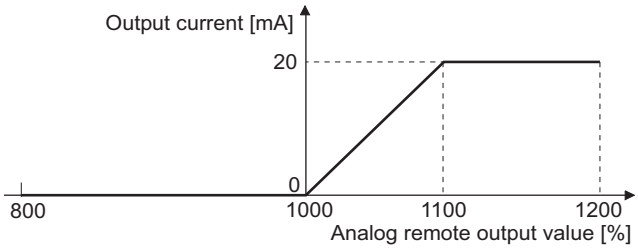

Terminal CA

- When **Pr.158 AM terminal function selection** = "87, 88, 89, or 90", an analog voltage can be output via terminal AM.
- Terminal AM output [V] = 10 [V] × (Analog remote output value - 1000)/100
  The output range is -10 to +10 V regardless of the **Pr.290 Monitor negative output selection** setting.

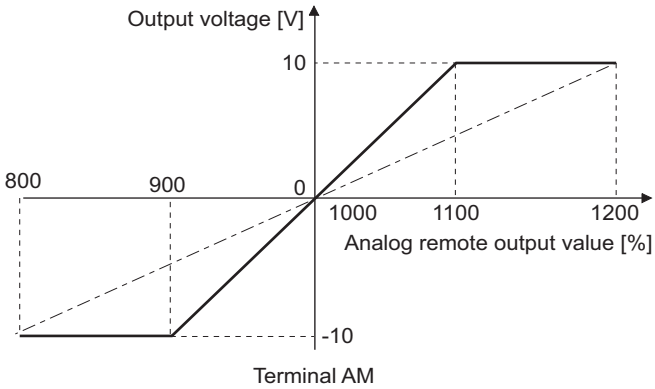

◆ Analog remote output data retention (Pr.655)

- When the power supply is reset (including a power failure) while **Pr.655 Analog remote output selection** = "0" (initial value) or 10" and, the remote analog output (**Pr.656 to Pr.659**) returns to its initial value (1000%).
- When **Pr.655** = "1 or 11", the remote output data is stored in EEPROM before the inverter power is turned OFF. This means that the signal output setting after power restoration is the same as that before the power was turned OFF. However, when **Pr.655** = "1", the data during an inverter reset (terminal reset or reset request via communication) is not saved.
- When **Pr.655** = "10 or 11", the remote output data in the signal before the reset is stored even during an inverter reset.
- When the setting in **Pr.655** is changed, the remote analog output (**Pr.656 to Pr.659**) returns to its initial value (1000%).

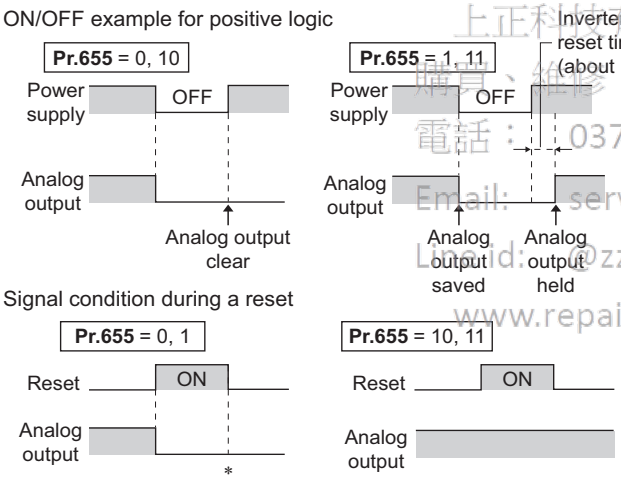

上正科技有限公司
購買、維修 此手冊零組件
電話：037-466333
Email: service@repairtw.com
Line id: @zzzz
www.repairtw.com

* When **Pr.655** = "1", the signal condition saved in EEPROM (condition of the last power OFF) is applied.

NOTE

- When **Pr.655** = "1 or 11" (remote output data retained at power OFF), take measures to keep the control circuit power ON, such as connecting terminal R1/L11 with terminal P/+ and connecting terminal S1/L21 with terminal N/- (while power is supplied via input terminals R/L1, S/L2 and T/L3). If the control power is not retained, the output signal after the inverter power turns ON is not guaranteed to work. When connecting the high power factor converter FR-HC2, assign the instantaneous power failure detection (X11) signal to an input terminal to input the IPF signal from the FR-HC2 to the terminal for X11 signal.

Parameters referred to

Pr.54 FM/CA terminal function selection ☞ page 297
Pr.158 AM terminal function selection ☞ page 297
Pr.290 Monitor negative output selection ☞ page 297
Pr.291 Pulse train I/O selection ☞ page 297

5.8.12 Fault code output selection

When a fault occurs, the corresponding data can be output as a 4-bit digital signal using via an open collector output terminal. The fault code can be read using an input module of programmable controller, etc.

Pr.	Name	Initial value	Setting range	Description
76 **M510**	**Fault code output selection**	0	0	Without fault code output
			1	With fault code output
			2	Fault code is output only when a fault occurs

- Fault codes can be output to the output terminals by setting **Pr.76 Fault code output selection** = "1 or 2".
- When the setting is "2", a fault code is only output when a fault occurs. In normal operation the terminal outputs the signal assigned in **Pr.191 to Pr.194 (output terminal function selection)**.
- The fault codes that can be output are shown in the following table. (0: Output transistor OFF, 1: Output transistor ON)

Operation panel indication (FR-DU08)	Output terminal operation				Fault code
	SU	IPF	OL	FU	
Normal*1	0	0	0	0	0
E.OC1	0	0	0	1	1
E.OC2	0	0	1	0	2
E.OC3	0	0	1	1	3
E.OV1 to E.OV3	0	1	0	0	4
E.THM	0	1	0	1	5
E.THT	0	1	1	0	6
E.IPF	0	1	1	1	7
E.UVT	1	0	0	0	8
E.FIN	1	0	0	1	9
E.BE	1	0	1	0	A
E. GF	1	0	1	1	B
E.OHT	1	1	0	0	C
E.OLT	1	1	0	1	D
E.OPT E.OP1	1	1	1	0	E
Terminals other than the above	1	1	1	1	F

*1 When **Pr.76** = "2", the terminal outputs the signal assigned by **Pr.191 to Pr.194**.

上正科技有限公司
購買、維修 此手冊零組件
電話： 037-466333
Email: service@repairtw.com
Line Id: @2222
www.repairtw.com

NOTE

- If an error occurs while **Pr.76** ≠ "0", the output terminals SU, IPF, OL, and FU output the signals in the table above regardless of the settings in **Pr.191 to Pr.194 (Output terminal function selection)**. Take caution when controlling the inverter with the output signals set by **Pr.191 to Pr.194**.

Parameters referred to

Pr.190 to Pr.196 (Output terminal function selection) ☞ page 312

5.8.13 Pulse train output to announce cumulative output energy

Every time when the output energy cumulated from the time at power ON or at an inverter reset or when the setting of **Pr.799 Pulse increment setting for output power** has been changed increments by the set value, the Pulse train output of output power (Y79) signal is output in pulses.

Pr.	Name	Initial value	Setting range	Description
799 **M520**	**Pulse increment setting for output power**	1 kWh	0.1 kWh, 1 kWh, 10 kWh, 100 kWh, 1000 kWh	The Pulse train output of output power (Y79) signal is output in pulses every time when the output energy increments by the set amount of energy (kWh).

◆ Pulse increment setting for output power (Y79 signal, Pr.799)

- Every time when the output energy cumulated from the time at power ON or at an inverter reset increments by the set value of **Pr.799 Pulse increment setting for output power**, the Pulse train output of output power (Y79) signal is output in pulses.

- The inverter does not stop cumulating (can continue to cumulate) the output energy even if the retry function or the automatic restart after instantaneous power failure function works because the cause of the function activation is a mini power failure which is too short to cause an inverter reset.
- If a power failure occurs, the cumulative value is reset to 0 kWh and restart cumulating.
- To use the Y79 signal, set "79 (positive logic) or 179 (negative logic)" in any of **Pr.190 to Pr.196 (Output terminal function selection)** to assign the function to the output terminal.

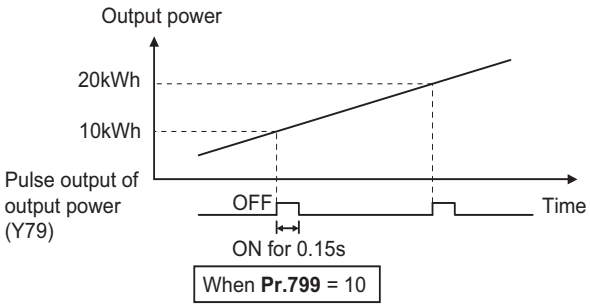

NOTE

- Because the accumulated data in the inverter is cleared when control power is lost by power failure or at an inverter reset, the value on the monitor cannot be used to charge electricity bill.
- Changing the terminal assignment using **Pr.190 to Pr.196 (Output terminal function selection)** may affect the other functions. Set parameters after confirming the function of each terminal. (Refer to page 312.)
- Do not assign the signal to terminal ABC1 or terminal ABC2 whose pulse outputs are frequently turned ON/OFF. Otherwise, the life of the relay contact may be shortened.

Parameters referred to

Pr.190 to Pr.196 (Output terminal function selection) ☞ page 312

上正科技有限公司
購買、維修 此手冊零組件
電話： 037-466333
Email: service@repairtw.com
Line Id: @zzzz
www.repairtw.com

5.8.14 Detection of control circuit temperature

The temperature of the control circuit board can be monitored, and a signal can be output according to a predetermined temperature setting.

Pr.	Name	Initial value	Setting range	Description
663 **M060**	**Control circuit temperature signal output level**	0°C	0 to 100°C	Set the temperature where the Y207 signal turns ON.

◆ Control circuit temperature monitoring

- The temperature of the control circuit board can be monitored within the range of 0 to 100°C on the operation panel, or via terminal FM/CA, or terminal AM. Refer to page 288 for information on how to select the monitor item.
- When **Pr.290 Monitor negative output selection** is set to enable display of the negative numbers for monitoring on the operation panel or via terminal AM, the range of monitoring is -20 to 100°C.
- The monitor value is a rough approximation of the change in the surrounding air temperature of the inverter. Use this parameter to grasp the operating environment of the inverter.

◆ Control circuit temperature detection (Pr.663, Y207 signal)

- The Y207 signal can be output when the control circuit temperature reaches the **Pr.663** setting or higher.
- To use the Y207 signal, set "207 (positive logic) or 307 (negative logic)" in any of **Pr.190 to Pr.196 (Output terminal function selection)** to assign the function to the output terminal.

NOTE

- The Y207 signal is turned OFF when the control circuit temperature becomes 5°C or more lower than the **Pr.663** setting.
- Changing the terminal assignment using **Pr.190 to Pr.196 (Output terminal function selection)** may affect the other functions. Set parameters after confirming the function of each terminal.

Parameters referred to

Pr.54 FM/CA terminal function selection ☞ page 297
Pr.158 AM terminal function selection ☞ page 297
Pr.190 to Pr.196 (Output terminal function selection) ☞ page 312
Pr.290 Monitor negative output selection ☞ page 297

5.9 (T) Multi-function input terminal parameters

Purpose	Parameter to set			Refer to page
To inverse the rotation direction with the voltage/current analog input selection (terminals 1, 2, and 4)	Analog input selection	P.T000, P.T001	Pr.73, Pr.267	330
To assign functions to analog input terminals	Terminal 1 and terminal 4 function assignment	P.T010, P.T040	Pr.858, Pr.868	334
To adjust the main speed by the analog auxiliary input	Analog auxiliary input and compensation (addition compensation and override functions)	P.T021, P.T031, P.T050, P.T051	Pr.73, Pr.242, Pr.243, Pr.252, Pr.253	335
To eliminate noise on analog inputs	Analog input filter	P.T002, P.T003, P.T005, P.T007	Pr.74, Pr.822, Pr.832, Pr.849	337
To adjust analog input frequency/ voltage (current) (calibration)	Frequency setting voltage (current) bias and gain	P.T100 to P.T103, P.T200 to P.T203, P.T400 to P.T403, P.M043	Pr.125, Pr.126, Pr.241, C2 to C7 (Pr.902 to Pr.905), C12 to C15 (Pr.917 to Pr.918)	339
To adjust voltage (current) of stall prevention operation level (calibration)	Bias and gain for voltage (current) setting of stall prevention operation level	P.T110 to P.T113, P.T410 to P.T413, P.M043	Pr.241, C16 to C19 (Pr.919 to Pr.920), C38 to C41 (Pr.932 to Pr.933)	344
To continue operating at analog current input loss	4 mA input check	P.T052 to P.T054	Pr.573, Pr.777, Pr.778	350
To assign functions to input terminals	Input terminal function selection	P.T700 to P.T711, P.T740	Pr.178 to Pr.189, Pr.699	355
To change the input specification (NO/ NC contact) of input signals	Output stop signal (MRS) input selection	P.T720	Pr.17	357
	Inverter run enable signal (X10) input selection	P.T721	Pr.599	541
	Power failure stop external signal (X48) input selection	P.T722	Pr.606	458
To enable the second function only during the constant speed	RT signal function validity condition selection	P.T730	Pr.155	358
To assign start and forward/reverse commands to different signals	Start signal (STF/STR) operation selection	P.G106	Pr.250	359

上正科技有限公司
銷售、維修 此手冊零組件
電話： 037-466333
Email： service@repairtw.com
Line id： @3222
www.repairtw.com

5.9.1 Analog input selection

The functions to switch the analog input terminal specifications, override function, forward/reverse rotation by the input signal polarity are selectable.

Pr.	Name	Initial value	Setting range		Description
73 T000	Analog input selection	1	0 to 5, 10 to 15	Switch 1 - OFF (initial status)	The terminal 2 input specification (0 to 5 V, 0 to 10 V, 0 to 20 mA) and terminal 1 input specification (0 to ±5 V, 0 to ±10 V) are selectable. Also the override and reversible operation settings are selectable.
			6 to 7, 16, 17	Switch 1 - ON	
267 T001	Terminal 4 input selection	0	0	Switch 2 - ON (initial status)	Terminal 4 input, 4 to 20 mA
			1	Switch 2 - OFF	Terminal 4 input, 0 to 5 V
			2		Terminal 4 input, 0 to 10 V

◆ Analog input specification selection

- For terminals 2 and 4 used for analog input, the voltage input (0 to 5 V, 0 to 10 V) and current input (0 to 20 mA) are selectable. To change the input specification, change the setting of **Pr.73 (Pr.267)** and the voltage/current input selection switch (switch 1 or switch 2).

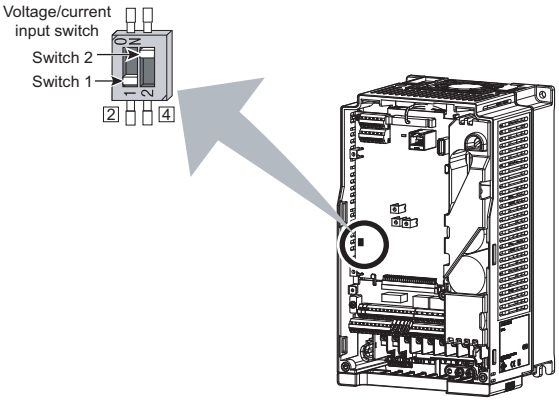

Switch state		Input specification	Input terminal	Rated specification
Switch 1	ON	Current input	Terminal 2	For voltage input, the input resistance is 10 ±1 kΩ and the maximum permissible voltage is 20 VDC. For current input, the input resistance is 245 ±5 Ω and the maximum permissible current is 30 mA.
	OFF	Voltage input (initial status)		
Switch 2	ON	Current input (initial status)	Terminal 4	
	OFF	Voltage input		

- Change the setting of the voltage/current input selection switch to change the rated specification of terminal 2 or 4.
- Set **Pr.73 (Pr.267)** and the voltage/current input selection switch according to the analog signal input. The incorrect settings shown in the following table cause a failure. The inverter does not operate properly with other incorrect settings.

上正科技有限公司
購買、維修 此手冊零組件
電話： 037-466333
Email： service@repairtw.com
Line ID： @222
www.repairtw.com

Setting causing a failure		Operation
Switch setting	Terminal input	
ON (Current input)	Voltage input	Causes an analog signal output circuit failure in an external device (due to increased loads on the signal output circuit of the external device).
OFF (Voltage input)	Current input	Causes an input circuit failure in the inverter (due to an increased output power in the analog signal output circuit of an external device).

NOTE

- Check the number of the voltage/current input selection switch before setting, because it is different from the switch number indicated on the FR-F700(P) series inverter.

Set **Pr.73** and the voltage/current input selection switch according to the following table.

Pr.73 setting	Terminal 2 input	Switch 1	Terminal 1 input	Compensation input terminal compensation method	Reversible polarity
0	0 to 10 V*1	OFF	0 to ±10 V	Terminal 1 addition compensation	Not applied (state in which a negative polarity frequency command signal is not accepted)
1 (initial value)	0 to 5 V*1	OFF	0 to ±10 V		
2	0 to 10 V*1	OFF	0 to ±5 V		
3	0 to 5 V*1	OFF	0 to ±5 V		
4	0 to 10 V	OFF	0 to ±10 V*1	Terminal 2 override	
5	0 to 5 V	OFF	0 to ±5 V*1		
6	0 to 20 mA*1	ON	0 to ±10 V	Terminal 1 addition compensation	
7	0 to 20 mA*1	ON	0 to ±5 V		
10	0 to 10 V*1	OFF	0 to ±10 V		Applied
11	0 to 5 V*1	OFF	0 to ±10 V		
12	0 to 10 V*1	OFF	0 to ±5 V		
13	0 to 5 V*1	OFF	0 to ±5 V		
14	0 to 10 V	OFF	0 to ±10 V*1	Terminal 2 override	
15	0 to 5 V	OFF	0 to ±5 V*1		
16	0 to 20 mA*1	ON	0 to ±10 V	Terminal 1 addition compensation	
17	0 to 20 mA*1	ON	0 to ±5 V		

*1 The main speed setting is indicated.

- When the Terminal 4 input selection (AU) signal is turned ON, terminal 4 is used to set the main speed. In this case, terminals 1 and 2 are not used to set the main speed.
- Set **Pr.267** and the voltage/current input selection switch according to the following table.

Pr.267 setting	Terminal 4 input	Switch 2
0 (initial value)	4 to 20 mA	ON
1	0 to 5 V	OFF
2	0 to 10 V	OFF

上正科技有限公司
購買、維修、此手冊零組件
電話： 02-2440833
Email: service@repairtw.com
Line id: @zzzz
www.repairtw.com

NOTE

- To enable terminal 4, turn ON the AU signal.
- Set the parameters and the switch settings so that they agree. Incorrect setting may cause a fault, failure, or malfunction.
- The frequency setting auxiliary input through terminal 1 is added to the main speed setting signal input through terminal 2 or 4.
- When the override setting is selected, terminal 1 or 4 is set to the main speed setting, and terminal 2 is set to the override signal (0 to 5 V or 0 to 10 V, and 50% to 150%). (If the main speed signal is not input through terminal 1 or 4, the compensation by terminal 2 is disabled.)
- Use **Pr.125 (Pr.126) (frequency setting gain)** to change the maximum output frequency at the input of the maximum output frequency command voltage (current). At this time, the command voltage (current) need not be input. Also, the acceleration/deceleration time, which is a slope up/down to the acceleration/deceleration reference frequency, is not affected by the change in **Pr.73** setting.
- When "4" is set in **Pr.858 Terminal 4 function assignment (Pr.868 Terminal 1 function assignment)**, the stall prevention operation level is input through terminal 1 (4). To input frequency through terminal 1 (4), set "0 (initial value)" in **Pr.858 (Pr.868)**.
- Always calibrate the input after changing the voltage/current input signal with **Pr.73 (Pr.267)** and the voltage/current input selection switch.
- When **Pr.561 PTC thermistor protection level** ≠ "9999", terminal 2 is not used for the analog frequency command.

◆ Running with analog input voltage

- For the frequency setting signal, input 0 to 5 VDC (or 0 to 10 VDC) between terminals 2 and 5. The 5 V (10 V) input is the maximum output frequency.

- The power supply 5 V (10 V) can be input by either using the internal power supply or preparing an external power supply. The internal power supply is 5 VDC output between terminals 10 and 5, and 10 VDC output between terminals 10E and 5.

Terminal	Inverter internal power source voltage	Frequency setting resolution	Pr.73 (terminal 2 input voltage)
10	5 VDC	0.030/60 Hz	0 to 5 VDC input
10E	10 VDC	0.015/60 Hz	0 to 10 VDC input

- To supply the 10 VDC input to terminal 2, set "0, 2, 4, 10, 12, or 14" in **Pr.73**. (The initial value is 0 to 5 V.)
- Set "1 (0 to 5 VDC)" or "2 (0 to 10 VDC)" in **Pr.267** and turn OFF the voltage/current input selection switch to input voltage through terminal 4. Turning ON the AU signal activates the terminal 4 input.

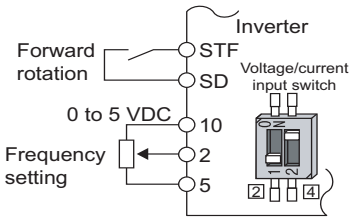

Connection diagram using terminal 2 (0 to 5 VDC)

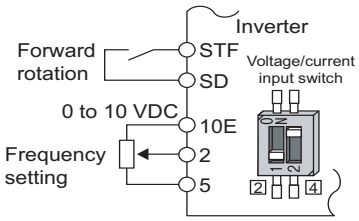

Connection diagram using terminal 2 (0 to 10 VDC)

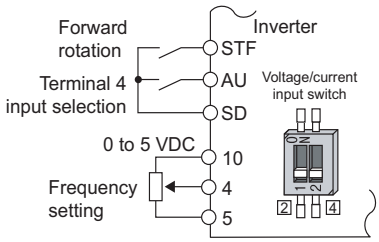

Connection diagram using terminal 4 (0 to 5 VDC)

NOTE

- The wiring length of terminal 10, 2, and 5 should be 30 m at maximum.

◆ Running with analog input current

上正科技有限公司
購買、維修此手冊零組件
電話： 037-466333
Email: service@repairtw.com
Line id: @zzzz
www.repairtw.com

- For constant pressure or temperature control with fans, pumps, or other devices, automatic operation is available by setting the regulator output signal 4 to 20 mADC to between terminals 4 and 5.
- To use terminal 4, the AU signal needs to be turned ON.

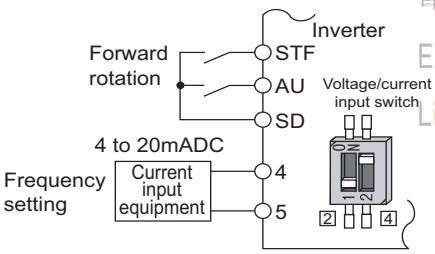

Connection diagram using terminal 4 (4 to 20mADC)

- Set "6, 7, 16, or 17" in **Pr.73** and turn ON the voltage/current input selection switch to input current through terminal 2. In this case, the AU signal does not need to be turned ON.

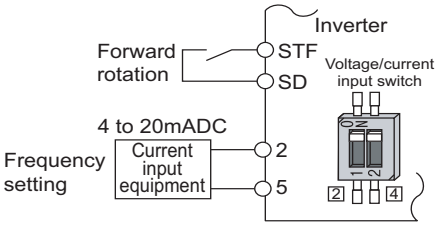

Connection diagram using terminal 2 (4 to 20mADC)

◆ Performing forward/reverse rotation with the analog input (polarity reversible operation)

- Setting "10 to 17" in **Pr.73** enables the polarity reversible operation.

- Set a positive or negative input (0 to ±5 V or 0 to ±10 V) to terminal 1 to allow the operation of forward/reverse rotation according to the polarity of the input value.

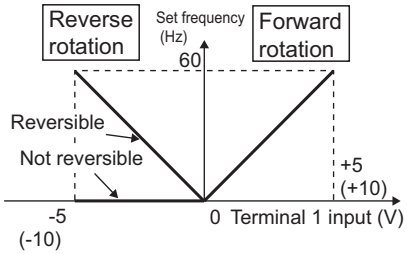

Compensation input characteristics when STF is ON

Parameters referred to

Pr.22 Stall prevention operation level ☞ page 273
Pr.125 Terminal 2 frequency setting gain frequency, Pr.126 Terminal 4 frequency setting gain frequency ☞ page 339
Pr.252, Pr.253 Override bias/gain ☞ page 335
Pr.561 PTC thermistor protection level ☞ page 252
Pr.858 Terminal 4 function assignment, Pr.868 Terminal 1 function assignment ☞ page 334

5.9.2 Analog input terminal (terminal 1, 4) function assignment

The analog input terminal 1 and terminal 4 functions are set and changeable with parameters.

Pr.	Name	Initial value	Setting range	Description
868 **T010**	**Terminal 1 function assignment**	0	0, 4, 9999	Select the terminal 1 function. (Refer to the following table.)
858 **T040**	**Terminal 4 function assignment**	0	0, 4, 9999	Select the terminal 4 function. (Refer to the following table.)

上正科技有限公司
購買、維修 此手冊零組件
電話： 037-466333
Email: service@repairtw.com
Line id: @zzzz
www.repairtw.com

- The frequency (speed) command, stall prevention level, and auxiliary frequency setting are selectable for terminals 1 and 4 used for analog input.
  The functions available are different depending on the settings in **Pr.868 Terminal 1 function assignment** and **Pr.858 Terminal 4 function assignment** as shown in the following table.

Setting value	Terminal 1 function (Pr.868)	Terminal 4 function (Pr.858)
0 (initial value)	Auxiliary frequency setting	Frequency command (AU signal-ON)
4	Stall prevention operation level input	Stall prevention operation level input*1
9999	—	—

—: No function

*1 Invalid when **Pr.868** = "4".

NOTE

- When **Pr.868** = "4" (stall prevention), the terminal 4 function is enabled regardless of the ON/OFF state of the AU signal.

5.9.3 Analog input compensation

The analog input for multi-speed operation or speed setting (main speed) through terminal 2 or 4 can be compensated by adding an input, or terminal 2 can be used for an auxiliary input to compensate the analog input at a fixed ratio using the override function.

Pr.	Name	Initial value	Setting range	Description
73 **T000**	**Analog input selection**	1	0 to 3, 6, 7, 10 to 13, 16, 17	Compensation by addition
			4, 5, 14, 15	Compensation using the override function
242 **T021**	**Terminal 1 added compensation amount (terminal 2)**	100%	0 to 100%	Set the percentage of addition when terminal 2 is used to set the main speed.
243 **T041**	**Terminal 1 added compensation amount (terminal 4)**	75%	0 to 100%	Set the percentage of addition when terminal 4 is used to set the main speed.
252 **T050**	**Override bias**	50%	0 to 200%	Set bias compensation for the override function.
253 **T051**	**Override gain**	150%	0 to 200%	Set gain compensation for the override function.

◆ Compensation by addition (Pr.242, Pr.243)

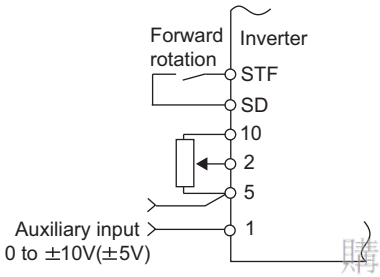

Example of addition compensation connection

上正科技有限公司
購買、維修 此手冊零組件
電話: 037-466333
Email: service@repairtw.com
Line Id: @2222
www.repairtw.com

- A compensation signal can be added to the main speed setting for such as synchronous or continuous speed control operation.
- Set "0 to 3, 6, 7, 10 to 13, 16, or 17" in **Pr.73** to add the voltage determined by the terminal 1 input when the main speed setting is input through terminal 2.
- When a negative voltage obtained from the addition, it is regarded as 0 and the operation is stopped when **Pr.73** = "0 to 3, 6, or 7", and the operation is reversed (polarity reversible operation) after the STF signal is turned ON when **Pr.73** = "10 to 13, 16, or 17".
- The terminal 1 compensation input can be added to the multi-speed setting or terminal 4 (initial value: 4 to 20 mA).
- The degree of addition to terminal 2 is adjustable with **Pr.242** and the degree of addition to terminal 4 is adjustable with **Pr.243**.

$$\text{Analog command value with use of terminal 2} = \text{terminal 2 input} + \text{terminal 1 input} \times \frac{\textbf{Pr.242}}{100(\%)}$$

$$\text{Analog command value with use of terminal 4} = \text{terminal 4 input} + \text{terminal 1 input} \times \frac{\textbf{Pr.243}}{100(\%)}$$

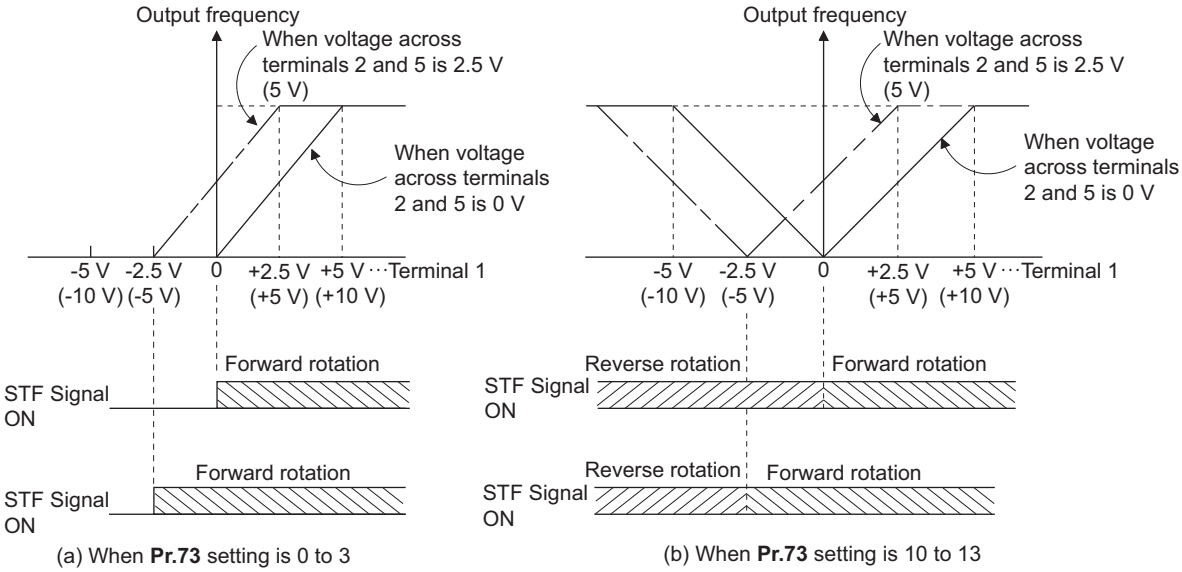

Auxiliary input characteristics

NOTE

- After changing the **Pr.73** setting, check the setting of the voltage/current input selection switch. Incorrect setting may cause a fault, failure, or malfunction. (Refer to page 330 for the setting.)

◆ Override function (Pr.252, Pr.253)

上正科技有限公司
購買、維修 此手冊零組件
電話： 037-466333
Email: service@repairtw.com
Line id: @zzzz
www.repairtw.com

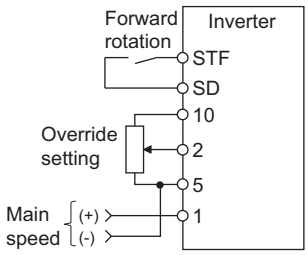

Connection example for the override function

- Use the override function to make the main speed changed at a specified rate.
- Set "4, 5, 14, or 15" in **Pr.73** to select the override function.
- When the override function is selected, terminal 1 or 4 is used for the main speed setting, and terminal 2 is used for the override signal. (If the main speed signal is not input through terminal 1 or 4, the compensation by terminal 2 is disabled.)
- Specify the scope of override by using **Pr.252** and **Pr.253**.
- How to calculate the set frequency when the override function is used:
  Main speed setting frequency (Hz): Terminals 1 or 4 input, multi-speed setting
  Compensation (%): Terminal 2 input

$$\text{Set frequency (Hz)} = \text{Main speed setting frequency (Hz)} \times \frac{\text{Compensation (\%)}}{100(\%)}$$

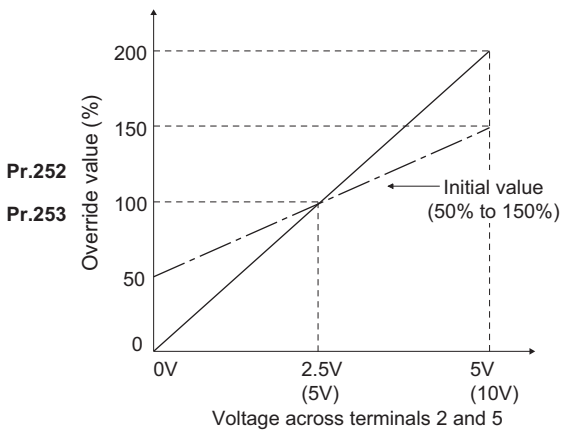

- Example) When **Pr.73** = "5"
  By the terminal 1 (main speed) and terminal 2 (auxiliary) input, the setting frequency is set as shown in the figure below.

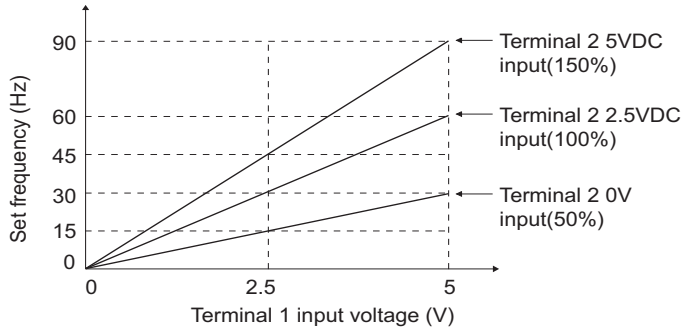

NOTE

- To use terminal 4, the AU signal needs to be turned ON.
- To make compensation input for multi-speed operation or remote setting, set **Pr.28 Multi-speed input compensation selection** = "1" (with compensation) (initial value "0").
- After changing the **Pr.73** setting, check the setting of the voltage/current input selection switch. Incorrect setting may cause a fault, failure, or malfunction. (Refer to page 330 for the setting.)

Parameters referred to

Pr.28 Multi-speed input compensation selection ☞ page 249
Pr.73 Analog input selection ☞ page 330

5.9.4 Response level of analog input and noise elimination

上正科技有限公司
購買、維修 此手冊零組件
電話： 037-466333
Email: service@repairtw.com
Line id: @zzzz
www.repairtw.com

The response level and stability of frequency command using the analog input signal (terminal 1, 2, or 4) can be adjusted.

Pr.	Name	Initial value	Setting range	Description
74 T002	**Input filter time constant**	1	0 to 8	Set the primary delay filter time constant to the analog input command. If the setting is too large, response becomes slow.
822 T003	**Speed setting filter 1**	9999	0 to 5 s	Set the primary delay filter time constant to the external speed command (analog input command).
			9999	As set in **Pr.74**.
832 T005	**Speed setting filter 2**	9999	0 to 5 s, 9999	Second function of **Pr.822** (enabled when the RT signal is ON)
849 T007	**Analog input offset adjustment**	100%	0 to 200%	Set offset for the analog speed input (terminal 2). The motor is prevented from rotating due to noise in the analog input or other factors when a zero speed command is given.

◆ Block diagram

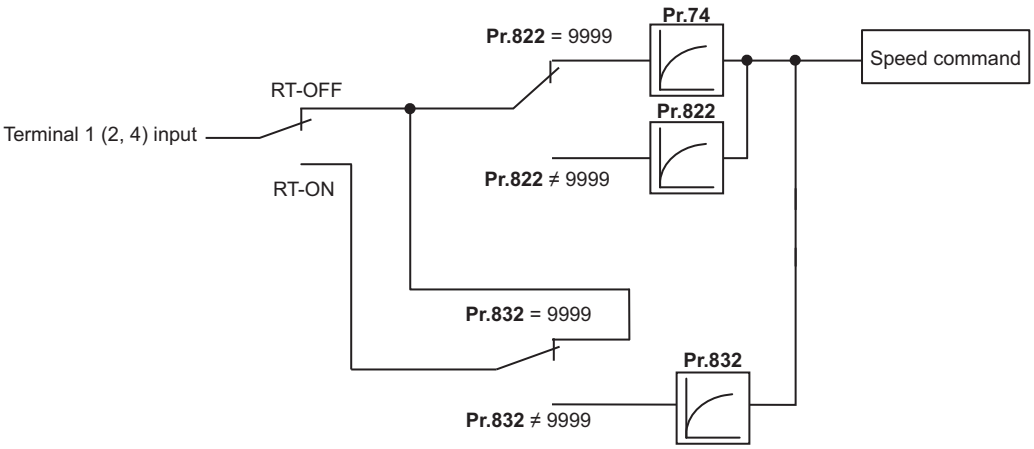

◆ Analog input time constant (Pr.74)

- Use this parameter to eliminate noise on the frequency setting circuit.
- Increase the filter time constant if the operation is unstable due to noise or other factors.
  If the setting is too large, response becomes slow. (The time constant can be between 0 and 8, which are about 5 ms to 1 s.)

◆ Analog speed command input time constant (Pr.822, Pr.832)

- Use **Pr.822 Speed setting filter 1** to set the primary delay filter time constant to the external speed command (analog input command). Increase the setting of the time constant to allow delays in follow-up of the speed command or when the analog input voltage is unstable.
- Use **Pr.832 Speed setting filter 2** to change the time constant to use one inverter to switch operation between two or more motors.
- **Pr.832 Speed setting filter 2** is enabled when the RT signal is ON.

◆ Analog speed command input offset adjustment (Pr.849)

- Use this parameter to set a range in which the motor is stopped for prevention of incorrect motor operation in a very low speed rotation when the speed command is an analog input.
- The voltage range is offset according to the setting in **Pr.849 Analog input offset adjustment**, assuming that 100% corresponds to zero.
  100% < **Pr.849** ..... Positive side
  100% > **Pr.849** ..... Negative side
  The detailed calculation of the offset voltage is as described below:
  Offset voltage [V] = Voltage at the time of 100% (5 V or 10 V[*1]) × (**Pr.849** - 100) / 100

*1 It depends on the **Pr.73** setting.

上正科技有限公司
購買、維修 此手冊零組件
電話 037-466333
Email: service@repairtw.com
Line id: @zzzz
www.repairtw.com

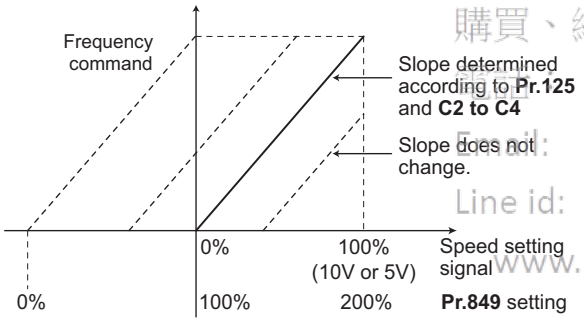

NOTE

- The analog input filter is invalid (no filter) during PID control operation.

Parameters referred to

Pr.73 Analog input selection ☞ page 330
Pr.125, C2 to C4 (bias and gain of the terminal 2 frequency setting) ☞ page 339

5.9.5 Frequency setting voltage (current) bias and gain

The magnitude (slope) of the output frequency can be set as desired in relation to the frequency setting signal (0 to 5 VDC, 0 to 10 VDC, or 4 to 20 mA). Use **Pr.73 Analog input selection (Pr.267 Terminal 4 input selection)** and the voltage/current input selection switch to switch among input of 0 to 5 VDC, 0 to 10 V, and 4 to 20 mA. (Refer to page 330.)

Pr.	Name	Initial value		Setting range	Description
		FM	CA		
C2 (902) T200[*1]	**Terminal 2 frequency setting bias frequency**	0 Hz		0 to 590 Hz	Set the bias frequency for the terminal 2 input.
C3 (902) T201[*1]	**Terminal 2 frequency setting bias**	0%		0 to 300%	Set the converted % of the bias voltage (current) for the terminal 2 input.
125 (903) T202 T022[*1]	**Terminal 2 frequency setting gain frequency**	60 Hz	50 Hz	0 to 590 Hz	Set the gain (maximum) frequency for the terminal 2 input.
C4 (903) T203[*1]	**Terminal 2 frequency setting gain**	100%		0 to 300%	Set the converted % of the gain voltage (current) for the terminal 2 input.
C5 (904) T400[*1]	**Terminal 4 frequency setting bias frequency**	0 Hz		0 to 590 Hz	Set the bias frequency for the terminal 4 input.
C6 (904) T401[*1]	**Terminal 4 frequency setting bias**	20%		0 to 300%	Set the converted % of the bias current (voltage) for the terminal 4 input.
126 (905) T402 T042[*1]	**Terminal 4 frequency setting gain frequency**	60 Hz	50 Hz	0 to 590 Hz	Set the gain (maximum) frequency for the terminal 4 input.
C7 (905) T403[*1]	**Terminal 4 frequency setting gain**	100%		0 to 300%	Set the converted % of the gain current (voltage) for the terminal 4 input.
C12 (917) T100[*1]	**Terminal 1 bias frequency (speed)**	0 Hz		0 to 590 Hz	Set the bias frequency (speed) for the terminal 1 input. (Speed limit)
C13 (917) T101[*1]	**Terminal 1 bias (speed)**	0%		0 to 300%	Set the converted % of the bias voltage for the terminal 1 input. (Speed limit)
C14 (918) T102[*1]	**Terminal 1 gain frequency (speed)**	60 Hz	50 Hz	0 to 590 Hz	Set the gain (maximum) frequency (speed) for the terminal 1 input. (Speed limit)
C15 (918) T103[*1]	**Terminal 1 gain (speed)**	100%		0 to 300%	Set the converted % of the gain voltage for the terminal 1 input. (Speed limit)
241 M043	**Analog input display unit switchover**	0		0: % display 1: V/mA display	Select the unit for analog input display.

*1 The parameter number in parentheses is the one for use with the LCD operation panel and the parameter unit.

上正科技有限公司
購買、維修、出手用零組件
電話： 037-466388
Email: service@repairtw.com
Line Id: @zzzz
www.repairtw.com

◆ Relationship between the analog input terminal function and the calibration parameter

- Calibration parameter according to the terminal 1 function

Pr.868 setting	Terminal function	Calibration parameter	
		Bias setting	Gain setting
0 (initial value)	Auxiliary Frequency (speed) setting	**C2 (Pr.902) Terminal 2 frequency setting bias frequency** **C3 (Pr.902) Terminal 2 frequency setting bias** **C5 (Pr.904) Terminal 4 frequency setting bias frequency** **C6 (Pr.904) Terminal 4 frequency setting bias**	**Pr.125 Terminal 2 frequency setting gain frequency** **C4 (Pr.903) Terminal 2 frequency setting gain** **Pr.126 Terminal 4 frequency setting gain frequency** **C7 (Pr.905) Terminal 4 frequency setting gain**
4	Stall prevention operation level[*1]	**C16 (Pr.919) Terminal 1 bias command (torque)** **C17 (Pr.919) Terminal 1 bias (torque)**	**C18 (Pr.920) Terminal 1 gain command (torque)** **C19 (Pr.920) Terminal 1 gain (torque)**
9999	No function	—	—

- Calibration parameter according to the terminal 4 function

Pr.858 setting	Terminal function	Calibration parameter	
		Bias setting	Gain setting
0 (initial value)	Frequency command	**C5 (Pr.904) Terminal 4 frequency setting bias frequency** **C6 (Pr.904) Terminal 4 frequency setting bias**	**Pr.126 Terminal 4 frequency setting gain frequency** **C7 (Pr.905) Terminal 4 frequency setting gain**
4	Stall prevention operation level*1	**C38 (Pr.932) Terminal 4 bias command (torque)** **C39 (Pr.932) Terminal 4 bias (torque)**	**C40 (Pr.933) Terminal 4 gain command (torque)** **C41 (Pr.933) Terminal 4 gain (torque)**
9999	No function	—	—

*1 Use **Pr.148 Stall prevention level at 0 V input** and **Pr.149 Stall prevention level at 10 V input** to adjust bias and gain for setting the stall prevention operation level under V/F control and Advanced magnetic flux vector control.

◆ Changing the frequency for the maximum analog input (Pr.125, Pr.126)

- Use **Pr.125 (Pr.126)** to change the frequency setting (gain) for the maximum analog input voltage (current).
  (**C2 (Pr.902) to C7 (Pr.905)** settings do not need to be changed.)

◆ Analog input bias/gain calibration (C2 (Pr.902) to C7 (Pr.905), C12 (Pr.917) to C15 (Pr.918))

- The "bias" and "gain" functions serve to adjust the relationship between a setting input signal and the output frequency. A setting input signal is such as a 0 to 5 VDC, 0 to 10 VDC, or 4 to 20 mADC signal externally input to set the output frequency.
- Set the bias frequency of the terminal 2 input using **C2 (Pr.902)**. (It is initially set to the frequency at 0 V.)
- Use **Pr.125** to set the output frequency to the frequency command voltage (current) set by **Pr.73 Analog input selection**.
- Set the bias frequency of the terminal 1 input using **C12 (Pr.917)**. (It is initially set to the frequency at 0 V.)
- Set the gain frequency of the terminal 1 input using **C14 (Pr.918)**. (It is initially set to the frequency at 10 V.)
- Set the bias frequency of the terminal 4 input using **C5 (Pr.904)**. (It is initially set to the frequency at 4 mA.)
- Use **Pr.126** to set the output frequency to the 20 mA input of the frequency command current (4 to 20 mA).

上海伟创有限公司
購買、維修、此手冊零組件
電話： 021-46059
Email: service@repairtw.com
Line id: @zzzz
www.repairtw.com

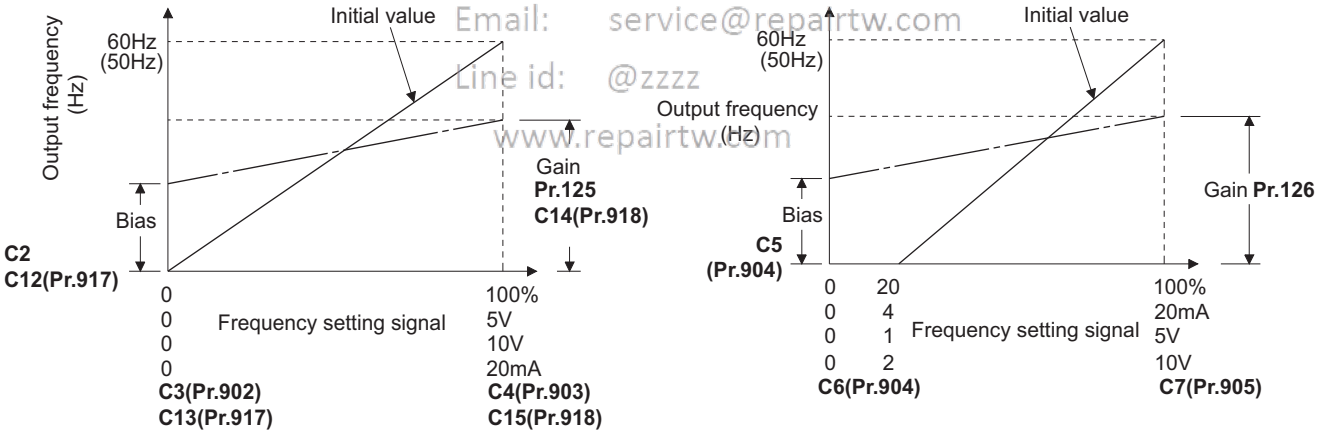

- There are three methods to adjust the bias/gain frequency setting voltage (current).
  Adjustment by applying voltage (current) between terminals 2 and 5 (4 and 5) to set the voltage (current) at the bias/gain frequency. ☞ page 342
  Adjustment by selecting the voltage (current) at the bias/gain frequency without applying voltage (current) between terminals 2 and 5 (4 and 5). ☞ page 343
  Adjustment by changing the frequency without adjusting the voltage (current). ☞ page 344

NOTE

- When the slope of the frequency is changed after calibration of terminal 2, the slope of the frequency is also changed for terminal 1.
- When voltage is applied to terminal 1 while calibration of terminal 2 or terminal 4 is in progress, the terminal 1 input value is added to the terminal 2 (4) input value.
- Always calibrate the input after changing the voltage/current input signal with **Pr.73 (Pr.267)** and the voltage/current input selection switch.

◆ Display unit changing for analog input (Pr.241)

- The analog input display unit (%/V/mA) can be changed for analog input bias/gain calibration.
- Depending on the terminal input specification setting of **Pr.73 (Pr.267)** and the voltage/current input switch, the unit of the displayed value of **C3 (Pr.902), C4 (Pr.903), C6 (Pr.904)** and **C7 (Pr.905)** changes as follows:

Analog command (via terminal 2 or 4) (depending on the settings of Pr.73 (Pr.267) and the voltage/current input selection switch)	Pr.241 = 0 (initial value)	Pr.241 = 1
0 to 5 V input	0 to 100% (0.1%)	0 to 5 V (0.01 V)
0 to 10 V input	0 to 100% (0.1%)	0 to 10 V (0.01 V)
0 to 20 mA input	0 to 100% (0.1%)	0 to 20 mA (0.01 mA)

NOTE

- When voltage is applied to terminal 1 while the terminal 1 input specification (0 to ±5 V, 0 to ±10 V) does not agree with the main speed (terminal 2 or terminal 4 input) specification (0 to 5 V, 0 to 10 V, 0 to 20 mA), the analog input is not correctly displayed. (For example, when 0 V is applied to terminal 2 and 10 V is applied to terminal 1 in the initial status, the value is indicated as 5 V (100%).)
  Set "0 (initial value)" in **Pr.241** to use the % display.

上正科技有限公司
購買、維修 此手冊零組件
電話： 037-466333
Email: service@repairtw.com
Line id: @zzzz
www.repairtw.com

◆ Frequency setting voltage (current) bias/gain adjustment method

■ Adjustment by applying voltage (current) between terminals 2 and 5 (4 and 5) to set the voltage (current) at the bias/gain frequency (Example of adjustment at the gain frequency)

Operating procedure

1. Turning ON the power of the inverter

The operation panel is in the monitor mode.

2. Changing the operation mode

Press [PU/EXT] to choose the PU operation mode. The [PU] indicator turns ON.

3. Selecting the parameter setting mode

Press [MODE] to choose the parameter setting mode. (The parameter number read previously appears.)

4. Calibration parameter selection

Turn ⊛ until "C. . . . " appears. Press [SET] to display "C -- -- -- --".

5. Selecting a parameter

Turn ⊛ until "C 4" (**C4 (Pr.903) Terminal 2 frequency setting gain**) appears for terminal 2, or "C 7" (**C7 (Pr.905) Terminal 4 frequency setting gain**) for terminal 4.

6. Analog voltage (current) display

Press [SET] to display the analog voltage (current) value (%) currently applied to terminal 2 (4).

Do not touch ⊛ until calibration is completed.

7. Voltage (current) application

Apply a 5 V (20 mA). (Turn the external potentiometer connected between terminals 2 and 5 (terminals 4 and 5) to a desired position.)

8. Setting completed

Press [SET] to confirm the selection. The analog voltage (current) % and "C 4 (C 7)" are displayed alternately.

- Turn ⊛ to read another parameter.
- Press [SET] to return to the "C -- -- -- --" display.
- Press [SET] twice to show the next parameter.

上正科技有限公司
購買、維修 此手冊零組件
電話： 037-466333
Email: service@repairtw.com
Line id: @zzzz
www.repairtw.com

■ Adjustment by selecting the voltage (current) at the bias/gain frequency without applying voltage (current) between terminals 2 and 5 (4 and 5) (Example of adjustment at the gain frequency)

Operating procedure

1. Turning ON the power of the inverter

The operation panel is in the monitor mode.

2. Changing the operation mode

Press [PU EXT] to choose the PU operation mode. The [PU] indicator turns ON.

3. Selecting the parameter setting mode

Press [MODE] to choose the parameter setting mode. (The parameter number read previously appears.)

4. Calibration parameter selection

Turn ⊙ until "C. . . . " appears. Press [SET] to display "C -- -- -- ".

5. Selecting a parameter

Turn ⊙ until "C 4" (**C4 (Pr.903) Terminal 2 frequency setting gain**) appears for terminal 2, or "C 7" (**C7 (Pr.905) Terminal 4 frequency setting gain**) for terminal 4.

6. Analog voltage (current) display

Press [SET] to display the analog voltage (current) value (%) currently applied to terminal 2 (4).

7. Analog voltage (current) adjustment

When ⊙ is turned, the gain voltage (current) value (%) currently set to the parameter appears.

Turn ⊙ until the desired gain voltage (current) value (%) appears.

8. Setting completed

Press [SET] to confirm the selection. The analog voltage (current) % and "C 4 (C 7)" are displayed alternately.

上正科技有限公司
購買、維修 此手冊零組件
電話： 037-466393
Email: service@repairtw.com
Line id: @zzzz
www.repairtw.com

- Turn ⊙ to read another parameter.
- Press [SET] to return to the "C -- -- -- -- " display.
- Press [SET] twice to show the next parameter.

NOTE

- Press ⊙ after step 6 to check the present bias/gain frequency setting. The setting cannot be checked after step 7.

■ **Adjustment by changing the frequency without adjusting the voltage (current) (Example of changing the gain frequency from 60 Hz to 50 Hz)**

Operating procedure

1. Selecting the parameter

Turn ⊛ until "P. 125" (**Pr.125**) appears for terminal 2, or "P. 126" (**Pr.126**) for terminal 4.

Press [SET] to read the present set value. (60.00 Hz)

2. Changing the maximum frequency

Turn ⊛ to change the set value to "50.00". (50.00 Hz)

Press [SET] to confirm the selection. "50.00" and "P. 125 (P. 126)" are displayed alternately.

3. Selecting the mode and the monitor item

Press [MODE] three times to select the monitor mode, and change the monitor item to the frequency.

4. Start

Turn ON the start switch (STF/STR signal), and turn the frequency setting potentiometer clockwise slowly to full. (Refer to steps 2 and 3 in page 124.)

The motor is operated at 50 Hz.

NOTE

- If the frequency meter (display meter) connected between terminal FM and SD (CA and 5) does not indicate exactly 60 Hz, set the calibration parameter **C0 FM/CA terminal calibration**. (Refer to page 302.)
- If the voltage (current) values at the gain and bias frequencies are too close to each other, an error "Er.3" may be indicated.
- Changing **C4 (Pr.903)** or **C7 (Pr.905)** (gain adjustment) will not change **Pr.20**.
  Input to terminal 1 (frequency setting auxiliary input) is added to the frequency setting signal.
- For operation outline of the parameter unit (FR-PU07), refer to the Instruction Manual of the FR-PU07.
- To set the value to 120 Hz or higher, the **Pr.18 High speed maximum frequency** needs to be 120 Hz or higher. (Refer to page 271.)
- Use the calibration parameter **C2 (Pr.902)** or **C5 (Pr.904)** to set the bias frequency. (Refer to page 340.)

E-T科技有限公司
購買、維修、技術服務組件
電話： 037-466333
Email: service@repairtw.com
Line id: @zzzz
www.repairtw.com

⚠CAUTION

- Be cautious when setting any value other than "0" as the bias frequency at 0 V (0 mA). Even if a speed command is not given, simply turning ON the start signal will start the motor at the preset frequency.

Parameters referred to

Pr.1 Maximum frequency, Pr.18 High speed maximum frequency ☞ page 271
Pr.20 Acceleration/deceleration reference frequency ☞ page 216
Pr.73 Analog input selection, Pr.267 Terminal 4 input selection ☞ page 330
Pr.79 Operation mode selection ☞ page 228
Pr.858 Terminal 4 function assignment, Pr.868 Terminal 1 function assignment ☞ page 334

5.9.6 Bias and gain for voltage (current) setting of stall prevention operation level

PM

The magnitude (slope) of the stall prevention operation level can be set as desired in relation to the analog signal (0 to 5 VDC, 0 to 10 VDC, or 4 to 20 mA).

Use **Pr.73 Analog input selection** or **Pr.267 Terminal 4 input selection** to switch among input 0 to 5 VDC, 0 to 10 VDC, and 4 to 20 mA. (Refer to page 330.)

Pr.	Name	Initial value	Setting range	Description	
C16 (919)[*1] **T110**	**Terminal 1 bias command (torque)**	0%	0 to 400%	Set the bias stall prevention operation level for the terminal 1 input.	
C17 (919)[*1] **T111**	**Terminal 1 bias (torque)**	0%	0 to 300%	Set the converted % of the bias voltage for the terminal 1 input.	
C18 (920)[*1] **T112**	**Terminal 1 gain command (torque)**	150%	0 to 400%	Set the gain (maximum) stall prevention operation level for the terminal 1 input.	
C19 (920)[*1] **T113**	**Terminal 1 gain (torque)**	100%	0 to 300%	Set the converted % of the gain voltage for the terminal 1 input.	
C38 (932)[*1] **T410**	**Terminal 4 bias command (torque)**	0%	0 to 400%	Set the bias stall prevention operation level for the terminal 4 input.	
C39 (932)[*1] **T411**	**Terminal 4 bias (torque)**	20%	0 to 300%	Set the converted % of the bias current (voltage) for the terminal 4 input.	
C40 (933)[*1] **T412**	**Terminal 4 gain command (torque)**	150%	0 to 400%	Set the gain (maximum) stall prevention operation level for the terminal 4 input.	
C41 (933)[*1] **T413**	**Terminal 4 gain (torque)**	100%	0 to 300%	Set the converted % of the gain current (voltage) for the terminal 4 input.	
241 M043	**Analog input display unit switchover**	0	0	% display	Select the unit for analog input display.
			1	V/mA display	

*1 The parameter number in parentheses is the one for use with the LCD operation panel and the parameter unit.

◆ Changing the function of analog input terminal

- In the initial setting, terminal 1 is used for analog input of the auxiliary speed setting (auxiliary speed limit), and terminal 4 is used for the speed command.
  To use the analog input terminal to input the stall prevention operation level, set **Pr.868 Terminal 1 function assignment** and **Pr.858 Terminal 4 function assignment** to change the function. (Refer to page 334.)

上正科技有限公司
購買、維修、此手冊零組件
電話： 037-466333
Email: service@repairtw.com
Line id: @zzzz
www.repairtw.com

◆ Relationship between the analog input terminal function and the calibration parameter

- Calibration parameter according to the terminal 1 function

Pr.868 setting	Terminal function	Calibration parameter	
		Bias setting	Gain setting
0 (initial value)	Auxiliary Frequency (speed) setting	**C2 (Pr.902) Terminal 2 frequency setting bias frequency** **C3 (Pr.902) Terminal 2 frequency setting bias** **C5 (Pr.904) Terminal 4 frequency setting bias frequency** **C6 (Pr.904) Terminal 4 frequency setting bias**	**Pr.125 Terminal 2 frequency setting gain frequency** **C4 (Pr.903) Terminal 2 frequency setting gain** **Pr.126 Terminal 4 frequency setting gain frequency** **C7 (Pr.905) Terminal 4 frequency setting gain**
4	Stall prevention operation level[*1]	**C16 (Pr.919) Terminal 1 bias command (torque)** **C17 (Pr.919) Terminal 1 bias (torque)**	**C18 (Pr.920) Terminal 1 gain command (torque)** **C19 (Pr.920) Terminal 1 gain (torque)**
9999	No function	—	—

*1 Use **Pr.148 Stall prevention level at 0 V input** and **Pr.149 Stall prevention level at 10 V input** to adjust bias and gain for setting the stall prevention operation level under V/F control and Advanced magnetic flux vector control.

- Calibration parameter according to the terminal 4 function

Pr.858 setting	Terminal function	Calibration parameter	
		Bias setting	Gain setting
0 (initial value)	Frequency (speed) command	**C5 (Pr.904) Terminal 4 frequency setting bias frequency** **C6 (Pr.904) Terminal 4 frequency setting bias**	**Pr.126 Terminal 4 frequency setting gain frequency** **C7 (Pr.905) Terminal 4 frequency setting gain**
4	Stall prevention operation level[*2]	**C38 (Pr.932) Terminal 4 bias command (torque)** **C39 (Pr.932) Terminal 4 bias (torque)**	**C40 (Pr.933) Terminal 4 gain command (torque)** **C41 (Pr.933) Terminal 4 gain (torque)**
9999	No function	—	—

*2 Use **Pr.148 Stall prevention level at 0 V input** and **Pr.149 Stall prevention level at 10 V input** to adjust bias and gain for setting the stall prevention operation level under V/F control and Advanced magnetic flux vector control.

◆ Changing the torque for the maximum analog input (C18 (Pr.920), C40 (Pr.933))

- Use **C18 (Pr.920)** or **C40 (Pr.933)** to change the stall prevention operation level setting (gain) of the maximum analog input voltage (current).

◆ Analog input bias/gain calibration (C16 (Pr.919) to C19 (Pr.920), C38 (Pr.932) to C41 (Pr.933))

- "Bias"/"gain" function can adjust the relation between the stall prevention operation level and the setting input signal. Examples of setting input signals are 0 to 5 VDC, 0 to 10 VDC, or 4 to 20 mADC, and they are externally input.
- Set the bias value of the terminal 1 input using **C16 (Pr.919)**. (Shipped from factory with the stall prevention operation level for 0 V)
- Use **C18 (Pr.920)** to set the stall prevention operation level against the input voltage set by **Pr.73 Analog input selection**. (The initial value is 10 V.)
- Set the bias value of the terminal 4 input using **C38 (Pr.932)**. (The initial value is the stall prevention operation level for 4 mA.)
- Use **C40 (Pr.933)** to set the stall prevention operation level against the 20 mA input of the input current (4 to 20 mA).

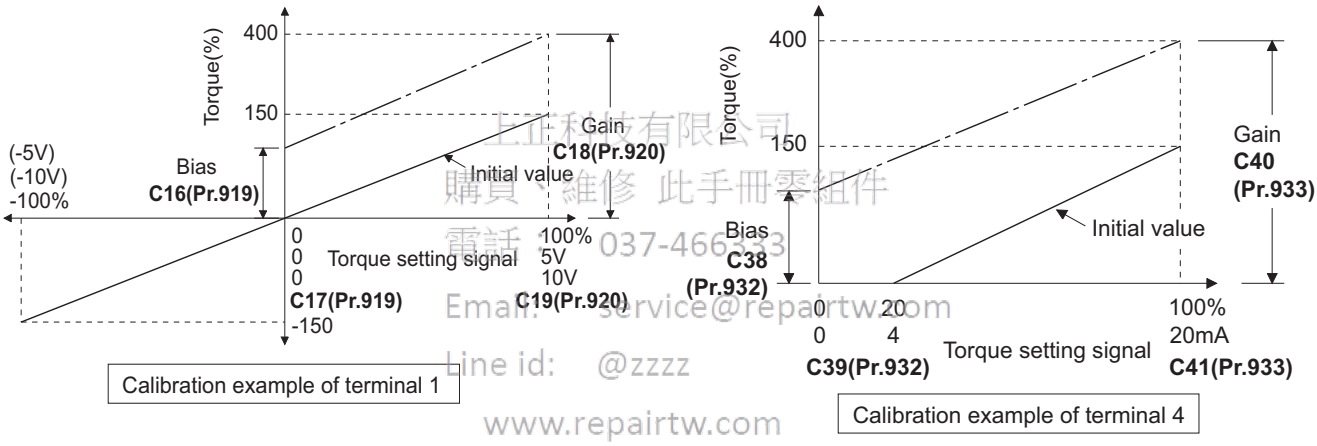

上正科技有限公司
購買、維修 此手冊零組件
電話：037-466233
Email: service@repairtw.com
Line id: @zzzz
www.repairtw.com

*1 If a negative command is given, the stall prevention operation level is regarded as "0".

- There are three methods to adjust the bias/gain for voltage (current) setting.
  Adjustment by applying voltage (current) between terminals 1 and 5 (4 and 5) to set the voltage (current) at the bias/gain level. ☞ page 348
  Adjustment by selecting the voltage (current) at the bias/gain level without applying voltage (current) between terminals 1 and 5 (4 and 5). ☞ page 349
  Adjustment by changing the stall prevention operation level only without adjusting the voltage (current). ☞ page 350

NOTE

- Always calibrate the input after changing the voltage/current input signal with **Pr.73 (Pr.267)** and the voltage/current input selection switch.

◆ Display unit changing for analog input (Pr.241)

- The analog input display unit (%/V/mA) can be changed for analog input bias/gain calibration.
- Depending on the terminal input specification setting of **Pr.73 (Pr.267)**, the unit of the displayed value of **C17 (Pr.919), C19 (Pr.920), C39 (Pr.932)**, and **C41 (Pr.933)** changes as follows:

Analog command (via terminal 1 or 4) (depending on the setting of Pr.73 (Pr.267))	Pr.241 = 0 (initial value)	Pr.241 = 1
0 to 5 V input	0 to 100% (0.1%)	0 to 5 V (0.01 V)
0 to 10 V input	0 to 100% (0.1%)	0 to 10 V (0.01 V)
0 to 20 mA input	0 to 100% (0.1%)	0 to 20 mA (0.01 mA)

上正科技有限公司
購買、維修 此手冊零組件
電話： 037-466333
Email: service@repairtw.com
Line id: @zzzz
www.repairtw.com

◆ Adjustment method for the stall prevention operation level setting voltage (current) bias and gain

(a) Adjustment by applying voltage (current) between terminals 1 and 5 (4 and 5) to set the voltage (current) at the bias/gain level

Operating procedure

1. Turning ON the power of the inverter

The operation panel is in the monitor mode.

2. Changing the operation mode

Press [PU/EXT] to choose the PU operation mode. [PU] indicator turns ON.

Calibration is also possible in the External operation mode.

3. Selecting the parameter setting mode

Press [MODE] to choose the parameter setting mode. (The parameter number read previously appears.)

4. Calibration parameter selection

Turn ⊛ until "C. . . . " appears. Press [SET] to display "C -- -- -- -- ".

5. Selecting a parameter

Turn ⊛ until "C 19" (**C19 (Pr.920) Terminal 1 gain (torque)**) appears for terminal 1, or "C 41" (**C41 (Pr.933)Terminal 4 gain (torque)**) for terminal 4.

上正科技有限公司
購買、維修 此手冊零組件
電話: 037-456655
Email: service@repairtw.com
Line id: @zzzz
www.repairtw.com

6. Analog voltage (current) display

Press [SET] to display the analog voltage (current) % currently applied to the terminal 1 (4).

Do not touch ⊛ until calibration is completed.

7. Voltage (current) application

Apply a 5 V (20 mA). (Turn the external potentiometer connected between terminals 1 and 5 (terminals 4 and 5) to a desired position.)

8. Setting completed

Press [SET] to confirm the selection. The analog voltage (current) % and "C 19 (C 41)" are displayed alternately.

Turn ⊛ to read another parameter.

Press [SET] to return to the "C -- -- -- -- " display.

Press [SET] twice to show the next parameter.

(b) Adjustment by selecting the voltage (current) at the bias/gain level without applying voltage (current) between terminals 1 and 5 (4 and 5)

Operating procedure

1. Turning ON the power of the inverter

The operation panel is in the monitor mode.

2. Changing the operation mode

Press [PU/EXT] to choose the PU operation mode. [PU] indicator turns ON.

Calibration is also possible in the External operation mode.

3. Selecting the parameter setting mode

Press [MODE] to choose the parameter setting mode. (The parameter number read previously appears.)

4. Calibration parameter selection

Turn ⊛ until "C. . . . " appears. Press [SET] to display "C -- -- -- -- ".

5. Selecting a parameter

Turn ⊛ until "C 19" (**C19 (Pr.920) Terminal 1 gain (torque)**) appears for terminal 1, or "C 41" (C41 (Pr.933) **Terminal 4 gain (torque)**) for terminal 4.

6. Analog voltage (current) display

Press [SET] to display the analog voltage (current) % currently applied to the terminal 1 (4).

7. Analog voltage (current) adjustment

When ⊛ is turned, the gain voltage (current) value (%) currently set to the parameter appears.

Turn ⊛ until the desired gain voltage (current) value (%) appears.

8. Setting completed

Press [SET] to confirm the selection. The analog voltage (current) % and "C 19 (C 41)" are displayed alternately.

Turn ⊛ to read another parameter.

Press [SET] to return to the "C -- -- -- -- " display.

Press [SET] twice to show the next parameter.

上正科技有限公司
購買、維修 此手冊零組件
電話： 037-466333
Email: service@repairtw.com
Line id: @zzzz
www.repairtw.com

NOTE

- Press ⊛ after step 6 to check the present bias/gain setting of the stall prevention operation level. The setting cannot be checked after step 7.

(c) Adjustment by changing the stall prevention operation level only without adjusting the gain voltage (current).
(Example of changing the gain value from 150% to 130%)

Operating procedure

1. Selecting the parameter

Turn ⊛ until "C 18" (**Pr.920**) appears for terminal 2, or "C 40" (**Pr.933**) for terminal 4.

Press SET to read the present set value. (150.00%)

2. Changing the stall prevention operation level

Turn ⊛ to change the set value to "130.00" (130.00%)

Press SET to confirm the selection. "130.00" and "C 18 (C 40)" are displayed alternately.

3. Selecting the mode and the monitor item

Press MODE three times to select the monitor mode, and change the monitor item to the frequency.

4. Start

Turn ON the start switch (STF or STR) to apply a voltage across terminals 1 and 5 (4 and 5),
Operation is performed with 130% stall prevention operation level.

NOTE

- If the voltage (current) values at the gain and bias levels are too close to each other, an error ("Er.3") may be indicated.
- For operation outline of the parameter unit (FR-PU07), refer to the Instruction Manual of the FR-PU07.
- Use the calibration parameter **C16 (Pr.919)** or **C38 (Pr.932)** to set the bias level. (Refer to page 346.)

上正科技有限公司
購買 維修 此手用零組件
電話： 037-466333
Email: service@repairtw.com
Line id: @zzzz
www.repairtw.com

Parameters referred to

Pr.73 Analog input selection, Pr.267 Terminal 4 input selection ☞ page 330
Pr.79 Operation mode selection ☞ page 228
Pr.858 Terminal 4 function assignment, Pr.868 Terminal 1 function assignment ☞ page 334

5.9.7 Checking of current input on analog input terminal

When current is input to the analog input terminal 2 or terminal 4, the input current can be checked and the operation when the input falls below the specified level (the analog current input is lost) can be selected. The operation can be continued even when the analog current input is lost.

Pr.	Name	Initial value	Setting range	Description
573 **T052**	**4 mA input check selection**	9999	1	Operation continues with output frequency before the current input loss.
			2	4 mA input fault (E.LCI) is activated when the current input loss is detected.
			3	The inverter output decelerates the motor to a stop when the current input loss is detected. After the motor is stopped, 4 mA input fault (E.LCI) is activated.
			4	Operation continues at the frequency set in **Pr.777**.
			9999	No current input check
777 **T053**	**4 mA input fault operation frequency**	9999	0 to 590 Hz	Set the frequency for operation when the current input is lost. (Valid when **Pr.573** = "4")
			9999	No current input check when **Pr.573** = "4"
778 **T054**	**4 mA input check filter**	0 s	0 to 10 s	Set the current input loss detection time.

◆ Analog current input loss condition (Pr.778)

- When the current input to terminal 4 (terminal 2) continues to be 2 mA or less for the period set in **Pr.778**, it is considered as loss of analog current input and the Alarm (LF) signal is turned ON. The LF signal turns OFF when the current input becomes 3 mA or higher.

- For the LF signal, set "98 (positive logic) or 198 (negative logic)" in any of **Pr.190 to Pr.196 (Output terminal function selection)** to assign the function to the output terminal.

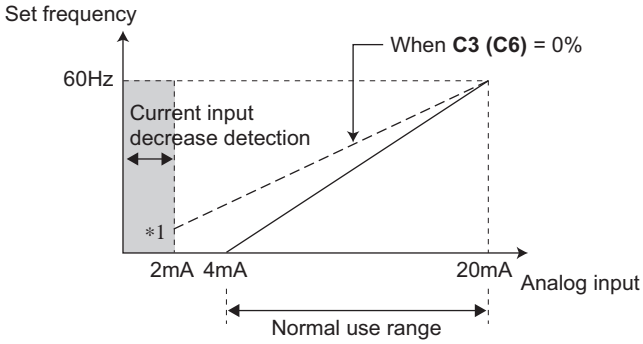

*1 When **Pr.573** ≠ "9999" and the terminal 4 (terminal 2) input is calibrated to 2 mA or less in **C2 (Pr.902) (C5 (Pr.904))**, the operation set in **Pr.573** is applied to the frequency at the input of 2 mA or less.

NOTE

- Changing the terminal assignment using **Pr.190 to Pr.196 (Output terminal function selection)** may affect the other functions. Set parameters after confirming the function of each terminal.

5

◆ Continuing operation when the analog current input is lost (Pr.573 = "1, 4", Pr.777)

- When **Pr.573** = "1", operation continues at the output frequency before the current input loss.
- When **Pr.573** = "4" and **Pr.777** ≠ "9999", operation continues at the frequency set in **Pr.777**.
- When the start command is turned OFF during current input loss, the inverter output decelerates the motor to a stop immediately, and the operation is not restarted even if a start command is input again.
- When the current input is restored, the LF signal is turned OFF, and operation is performed according to the current input.
- The following is the operation example during External operation.

上立科技有限公司
購買、維修、此手冊零組件
電話： 037-466333
Email: service@repairtw.com
Line id: @zzzz
www.repairtw.com

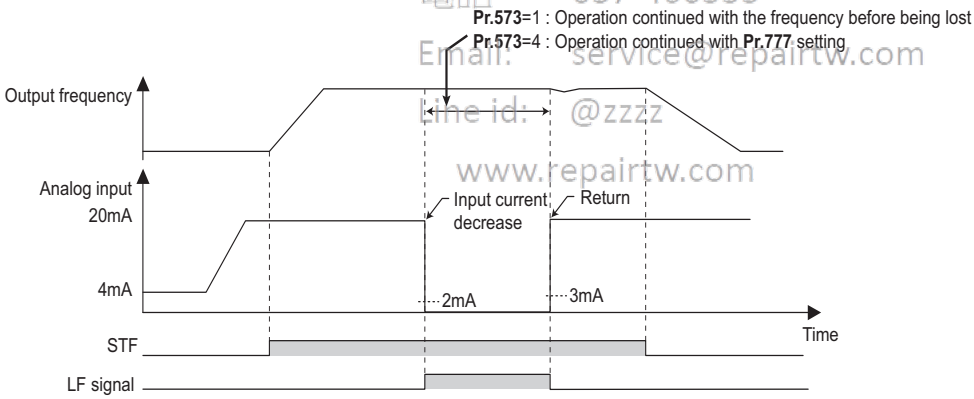

- The following is the operation example during PID control (reverse action) operation.

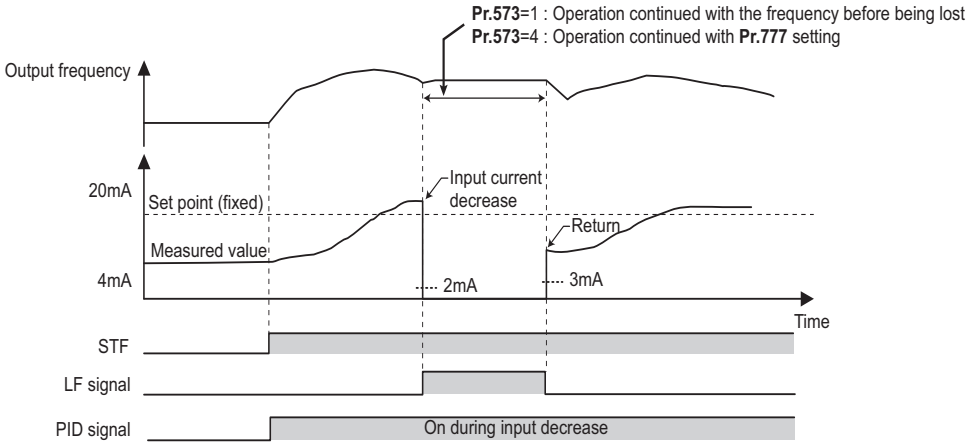

NOTE

- When the setting is changed to the continuous operation (**Pr.573** = "1 or 4") after the input current loss, the frequency before loss is regarded as 0 Hz.

◆ Fault output (Pr.573 = "2")

- When the analog current input becomes 2 mA or lower, the protective function E.LCI (4 mA input fault) is activated and the output is shut off.
- The following is the operation example during PID control (reverse action) operation.

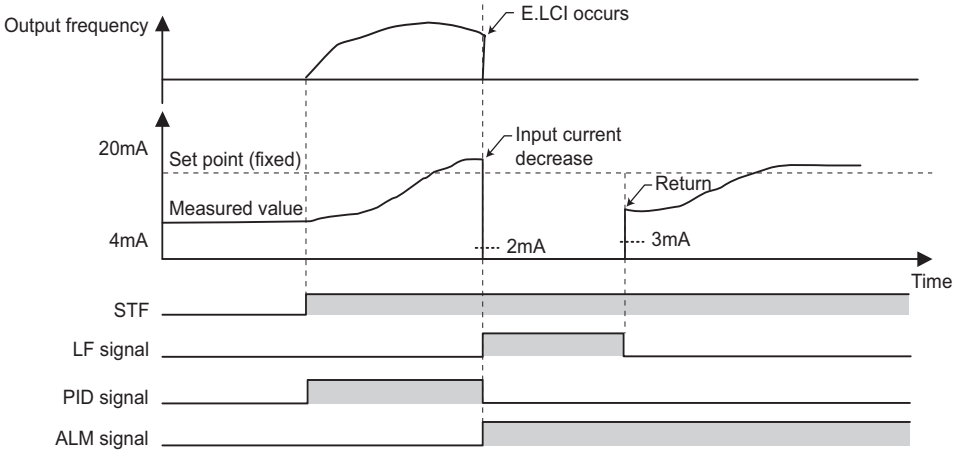

上正科技有限公司
購買、維修、地手用零組件
電話： 037-466333
Email: service@repairtw.com
Line id: @zzzz
www.repairtw.com

◆ Fault output after deceleration to stop (Pr.573 = "3")

- When the analog current input becomes 2 mA or lower, the inverter output decelerates the motor to a stop, and then the protective function E.LCI (4 mA input fault) is activated and the output is shut off.
- When the analog current input is restored during the deceleration, the motor is accelerated again and operates according to the current input.
- The following is the operation example during PID control (reverse action) operation.

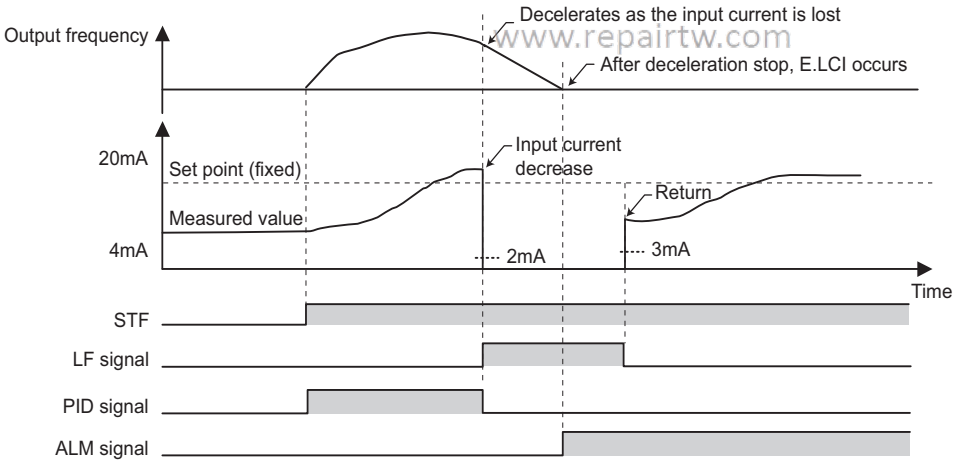

- The following is the operation example when the analog input current is restored during deceleration under PID control (reverse action).

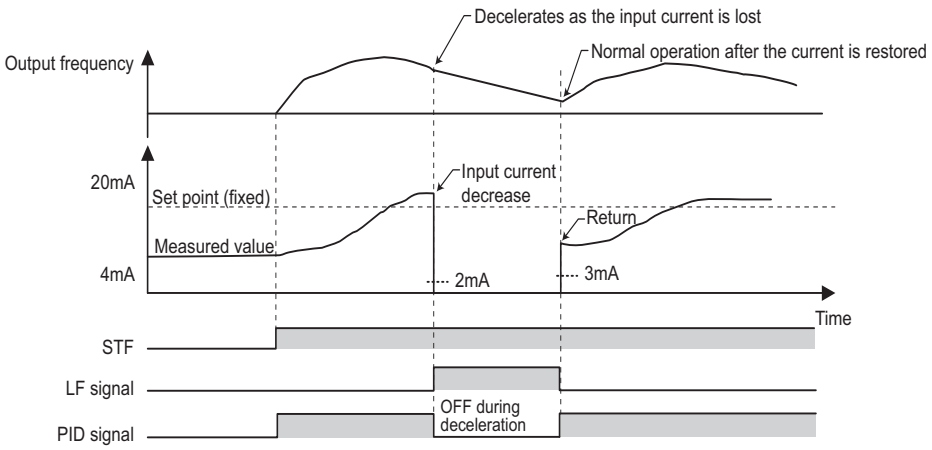

上正科技有限公司
購買、維修 此手冊零組件
電話： 037-466333
Email: service@repairtw.com
Line id: @zzzz
www.repairtw.com

◆ Functions related to current input check

Function	Operation	Refer to page
Minimum frequency	When the operation continues, the minimum frequency setting is valid even during current input loss.	271
Multi-speed operation	The multi-speed setting signal is prioritized even during current input loss (the motor operates according to the multi-speed setting even during continuous operation at the predetermined frequency or during deceleration to a stop). When the multi-speed setting signal is turned OFF while the input current is lost during the multi-speed operation, the motor is decelerated to a stop even if the parameter is set to continue operation when the current input is lost.	249
JOG operation	JOG operation is prioritized even during current input loss (the motor operation switches to JOB operation even during continuous operation at the predetermined frequency or during deceleration to a stop). When the JOG signal is turned OFF while the input current is lost during the JOG operation, the motor is decelerated to a stop even if the parameter is set to continue operation when the current input is lost.	248
MRS signal	The MRS signal is enabled even during current input loss (output is shut off by turning ON the MRS signal even during continuous operation at the predetermined frequency or during deceleration to a stop).	357
Remote setting	When the operation using the remote setting function is changed to the continuous operation after the current input is lost, acceleration, deceleration, and clear operations by the remote setting are disabled. The operations are enabled after restoration of current input.	222
Retry function	When the protective function is activated during continuous operation after the current input is lost and the retry function is used successfully, operation continues without clearing the frequency setting.	261
Compensation by addition, override compensation	When the operation using compensation by addition or override compensation is changed to the continuous operation after the current input is lost, compensation by addition or override compensation is disabled. The operations are enabled after restoration of current input.	335
Input filter time constant	The current before the filter time is applied is used for input loss detection. The current after the filter time is applied is used for continuous operation at the output frequency before the input loss.	350
PID control	PID calculation is stopped during current input loss. However, PID control is not disabled (the operation does not return to normal). During the pre-charge, end determination or fault determination by the pre-charge function is not performed when the current input is lost. The sleep function is prioritized even during current input loss. When the clearing condition of the sleep function is met during current input loss, continuous operation at the predetermined frequency is restored.	401
Power failure stop	The power failure stop function is prioritized even if current input loss is detected during power failure. After the power failure stop and re-acceleration, operation continues at the output frequency before the input loss. When the protective function E.LCI is selected when the current input is lost, E.LCI is activated after the power failure stop.	458
Traverse function	Traverse operation is performed based on the frequency even during continuous operation during current input loss.	396

E-mail : repair@repairtw.com

Parameters referred to

Pr.73 Analog input selection, Pr.267 Terminal 4 input selection ☞ page 330

5.9.8 Input terminal function selection

Use the following parameters to select or change the input terminal functions.

Pr.	Name	Initial value	Initial signal	Setting range
178 T700	**STF terminal function selection**	60	STF (Forward rotation command)	0 to 8, 10 to 14, 16, 18, 24, 25, 28, 37 to 40, 46 to 48, 50, 51, 57, 58, 60, 62, 64 to 67, 70 to 73, 77 to 81, 84, 94 to 98, 9999
179 T701	**STR terminal function selection**	61	STR (Reverse rotation command)	0 to 8, 10 to 14, 16, 18, 24, 25, 28, 37 to 40, 46 to 48, 50, 51, 57, 58, 61, 62, 64 to 67, 70 to 73, 77 to 81, 84, 94 to 98, 9999
180 T702	**RL terminal function selection**	0	RL (Low-speed operation command)	0 to 8, 10 to 14, 16, 18, 24, 25, 28, 37 to 40, 46 to 48, 50, 51, 57, 58, 62, 64 to 67, 70 to 73, 77 to 81, 84, 94 to 98, 9999
181 T703	**RM terminal function selection**	1	RM (Middle-speed operation command)	
182 T704	**RH terminal function selection**	2	RH (High-speed operation command)	
183 T705	**RT terminal function selection**	3	RT (Second function selection)	
184 T706	**AU terminal function selection**	4	AU (Terminal 4 input selection)	
185 T707	**JOG terminal function selection**	5	JOG (Jog operation selection)	
186 T708	**CS terminal function selection**	9999	No function	
187 T709	**MRS terminal function selection**	24*1	MRS (Output stop)	
		10*2	X10 (Inverter run enable)	
188 T710	**STOP terminal function selection**	25	STP (STOP) (Start self-holding selection)	
189 T711	**RES terminal function selection**	62	RES (Inverter reset)	

Pr.	Name	Initial value	Setting range	Description
699 T740	**Input terminal filter**	9999	5 to 50 ms	Set the time delay for the input terminal response.
			9999	No filter for the input terminal

*1 The initial value is for standard models and IP55 compatible models.

*2 The initial value is for separated converter types.

上正科技有限公司
購買、維修、此手冊零組件
電話： 037-466333
Email: service@repairtw.com
Line id: @zzzz
www.repairtw.com

◆ Input terminal function assignment

- Use **Pr.178 to Pr.189** to set the functions of the input terminals.
- Refer to the following table and set the parameters.

Setting	Signal name	Function		Related parameter	Refer to page
0	RL	**Pr.59** = 0 (initial value)	Low-speed operation command	**Pr.4 to Pr.6, Pr.24 to Pr.27, Pr.232 to Pr.239**	249
		Pr.59 ≠ 0 *1	Remote setting (setting clear)	**Pr.59**	222
1	RM	**Pr.59** = 0 (initial value)	Middle-speed operation command	**Pr.4 to Pr.6, Pr.24 to Pr.27, Pr.232 to Pr.239**	249
		Pr.59 ≠ 0 *1	Remote setting (deceleration)	**Pr.59**	222
2	RH	**Pr.59** = 0 (initial value)	High-speed operation command	**Pr.4 to Pr.6, Pr.24 to Pr.27, Pr.232 to Pr.239**	249
		Pr.59 ≠ 0 *1	Remote setting (acceleration)	**Pr.59**	222
3	RT	Second function selection		**Pr.44 to Pr.51, Pr.450 to Pr.463, Pr.569, Pr.832, etc.**	358
4	AU	Terminal 4 input selection		**Pr.267**	330
5	JOG	Jog operation selection		**Pr.15, Pr.16**	248
6	CS	Selection of automatic restart after instantaneous power failure / flying start		**Pr.57, Pr.58, Pr.162 to Pr.165, Pr.299, Pr.611**	446, 451
		Electronic bypass function		**Pr.57, Pr.58, Pr.135 to Pr.139, Pr.159**	387
7	OH	External thermal relay input*2		**Pr.9**	252

Setting	Signal name	Function	Related parameter	Refer to page
8	REX	15-speed selection (Combination with multi-speeds of RL, RM, and RH)	**Pr.4 to Pr.6, Pr.24 to Pr.27, Pr.232 to Pr.239**	249
10	X10	Inverter run enable (FR-HC2/FR-CV/FR-CC2 connection)	**Pr.30, Pr.599**	539
11	X11	FR-HC2/FR-CC2 connection, instantaneous power failure detection	**Pr.30**	539
12	X12	PU operation external interlock	**Pr.79**	228
13	X13	External DC injection brake operation start	**Pr.10 to Pr.12**	535
14	X14	PID control valid	**Pr.127 to Pr.134, Pr.575 to Pr.577**	401
16	X16	PU/External operation switchover (External operation with X16-ON)	**Pr.79, Pr.340**	228
18	X18	V/F switchover (V/F control with X18-ON)	**Pr.80, Pr.81, Pr.800**	169
24	MRS	Output stop	**Pr.17**	357
		Electronic bypass function	**Pr.57, Pr.58, Pr.135 to Pr.139, Pr.159**	387
25	STP (STOP)	Start self-holding selection	**Pr.250**	359
28	X28	Start-time tuning start external input	**Pr.95**	382
37	X37	Traverse function selection	**Pr.592 to Pr.597**	396
38	PDI1	PID multistage set point setting 1	**Pr.1460 to Pr.1466**	401
39	PDI2	PID multistage set point setting 2		
40	PDI3	PID multistage set point setting 3		
46	TRG	Trace trigger input	**Pr.1020 to Pr.1047**	465
47	TRC	Trace sampling start/end	**Pr.1020 to Pr.1047**	465
48	X48	Power failure stop external	**Pr.261 to Pr.266, Pr.294, Pr.668**	458
50	SQ	Sequence start	**Pr.414**	462
51	X51	Fault clear	**Pr.414**	462
57	JOGF	JOG forward rotation command	**Pr.15, Pr.16**	248
58	JOGR	JOG reverse rotation command	**Pr.15, Pr.16**	248
60	STF	Forward rotation command (assignable to the STF terminal **(Pr.178)** only)	**Pr.250**	359
61	STR	Reverse rotation command (assignable to the STR terminal **(Pr.179)** only)	**Pr.250**	359
62	RES	Inverter reset	**Pr.75**	188
64	X64	PID forward/reverse action switchover	**Pr.127 to Pr.134**	401
65	X65	PU/NET operation switchover (PU operation with X65-ON)	**Pr.79, Pr.340**	228
66	X66	External/NET operation switchover (NET operation with X66-ON)	**Pr.79, Pr.340**	228
67	X67	Command source switchover (command by **Pr.338** or **Pr.339** enabled with X67-ON)	**Pr.338, Pr.339**	239
70	X70	DC feeding operation permission*3	**Pr.30**	539
71	X71	DC feeding cancel *3	**Pr.30**	539
72	X72	PID P control switchover	**Pr.127 to Pr.134, Pr.575 to Pr.577**	401
73	X73	Second PID P control switchover	**Pr.127 to Pr.134, Pr.575 to Pr.577**	401
77	X77	Pre-charge end command	**Pr.760 to Pr.764**	425
78	X78	Second pre-charge end command	**Pr.765 to Pr.769**	425
79	X79	Second PID forward/reverse action switchover	**Pr.753 to Pr.758**	401
80	X80	Second PID control valid	**Pr.753 to Pr.758**	401
81	PGT	PID gain tuning start/forced end	**Pr.1211 to Pr.1219**	417
84	X84	Emergency drive execution command*3	**Pr.514, Pr.515, Pr.523, Pr.524, Pr.1013**	263
94	X94	Control signal input for main circuit power supply MC	**Pr.30, Pr.137, Pr.248, Pr.254**	393
95	X95	Converter unit fault input	**Pr.57, Pr.58, Pr.135 to Pr.139, Pr.159**	387
96	X96	Converter unit fault (E.OHT, E.CPU) input		
97	X97	Cleaning valid	**Pr.1469 to Pr.1479**	398
98	X98	Cleaning trigger		
9999	- - -	No function	- - - -	- - - -

*1 When **Pr.59 Remote function selection** ≠ "0", functions of the RL, RM, and RH signals are changed as shown in the table.

*2 The OH signal is activated when the relay contact is open.

上正科技有限公司
購買、維修 此手冊零組件
電話: 037-466333
Email: service@repairtw.com
Line id: @zzzz
www.repairtw.com

*3 The setting is available for the standard structure model and the IP55 compatible model.

NOTE

- The same function can be assigned to two or more terminals. In this case, the logic of terminal input is OR.
- The priorities of the speed commands are defined as follows: JOG > multi-speed setting (RH, RM, RL, REX) > PID (X14).
- When the Inverter run enable (X10) signal is not assigned, or when the PU operation external interlock (X12) signal is not assigned while **Pr.79 Operation mode selection** = "7", the MRS signal performs the same function.
- The same terminals are used to assign the multi-speed (7-speed) setting and the remote setting. The multi-speed setting and the remote setting cannot be assigned separately.
- When the terminal assignment is changed using **Pr.178 to Pr.189 (Input terminal function selection)**, wiring may be mistaken due to different terminal name and signal contents, or may affect other functions. Set parameters after confirming the function of each terminal.

◆ Adjusting the response of input terminals (Pr.699)

- Response of the input terminals can be delayed in a range between 5 to 50 ms. (The following is the operation example of the STF signal.)

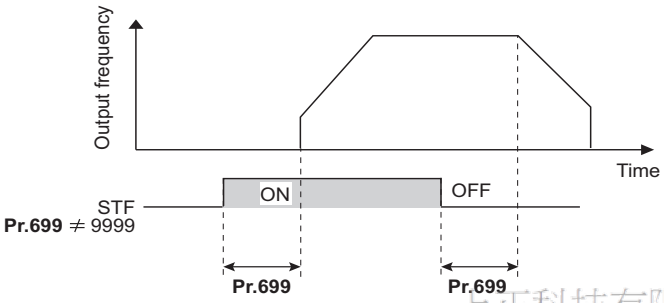

上正科技有限公司
購買、維修、出手四零組件
電話： 037-466333
Email: service@repairtw.com
Line id: @zzzz
www.repairtw.com

NOTE

- The **Pr.699** setting is invalid (no filter) for the following signals.
  - — Input signals which are already in the ON state when the power is turned ON
  - — Input signals used for the PLC function
  - — Inverter run enable (X10) signal

5.9.9 Inverter output shutoff

The inverter output can be shut off with the MRS signal. The logic of the MRS signal can also be selected.

Pr.	Name	Initial value	Setting range	Description
17 T720	MRS input selection	0	0	Normally open input
			2	Normally closed input (NC contact input specification)
			4	External terminal: Normally closed input (NC contact input specification) Communication: Normally open input

◆ Output shutoff signal (MRS signal)

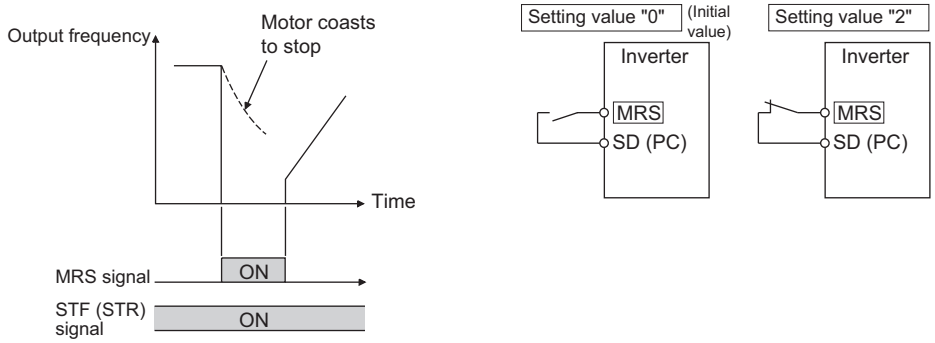

- When the Output stop (MRS) signal is turned ON while operating the inverter, the inverter output is instantaneously shut off.

- The response time of the MRS signal is within 2 ms.
- The MRS signal is used in the following cases.

Application	Description
To stop the motor using a mechanical brake (e.g. electromagnetic brake)	The inverter output is shut off when the mechanical brake operates.
To provide interlock to disable the motor operation by the inverter	With the MRS signal ON, the motor cannot be driven by the inverter even if the start signal is input to the inverter.
To coast the motor to a stop	When the start signal is turned OFF, the inverter decelerates the motor to a stop in the preset deceleration time, but when the MRS signal is turned ON, the motor coasts to a stop.

◆ MRS signal logic inversion (Pr.17 = "2")

- When "2" is set in **Pr.17**, the input specification of the MRS signal is changed to normally closed (NC contact). The inverter will shut off the output when the MRS signal is turned ON (when the contact is opened).

◆ Assigning a different action for each MRS signal input via communication and external terminal (Pr.17 = "4")

- When **Pr.17** = "4", the MRS signal input from an external terminal is normally closed (NC contact), and the MRS signal input from communication is normally open (NO contact). This function is useful to perform operation via communication while keeping the ON state of the MRS signal input from the external terminal.

External MRS	Communication MRS	Pr.17 setting		
		0	2	4
OFF	OFF	Operation enabled	Output shutoff	Output shutoff
OFF	ON	Output shutoff	Output shutoff	Output shutoff
ON	OFF	Output shutoff	Output shutoff	Operation enabled
ON	ON	Output shutoff	Operation enabled	Output shutoff

上竹科技有限公司
購買、維修 此手冊零組件
電話： 037-466333
Email: service@repairtw.com
Line id: @2222
www.repairtw.com

NOTE

- The MRS signal is assigned to terminal MRS in the initial status. By setting "24" in any of **Pr.178 to Pr.189 (Input terminal function selection)**, the MRS signal can be assigned to the other terminal.
- When using an external terminal to input the MRS signal, the MRS signal shuts off the output in any of the operation modes.
- The MRS signal is valid regardless of whether it is input through the external terminal or via network, but when the MRS signal is used as the Inverter run enable (X10) signal, input the signal through the external terminal.
- When the terminal assignment is changed using **Pr.178 to Pr.189 (Input terminal function selection)**, wiring may be mistaken due to different terminal name and signal contents, or may affect other functions. Set parameters after confirming the function of each terminal.

Parameters referred to

Pr.178 to Pr.189 (Input terminal function selection) ☞ page 355

5.9.10 Selecting the condition to activate the Second function selection (RT) signal

The second function can be selected using the RT signal. The condition to activate the second function can be also set.

Pr.	Name	Initial value	Setting range	Description
155 **T730**	**RT signal function validity condition selection**	0	0	The second function is immediately enabled when the RT signal is turned ON.
			10	The function cannot be changed to the second function during acceleration/deceleration. When the signal is turned ON during acceleration/deceleration, the function is changed after the acceleration/deceleration is finished.

- Turning ON the Second function selection (RT) signal enables the second functions.
- The following are the examples of the applications of the second functions.

  Switching between regular use and emergency use
  Switching between heavy load and light load
  Changing the acceleration/deceleration time by break point acceleration/deceleration
  Switching characteristics of main motor and sub motor

Connection diagram example for the second function

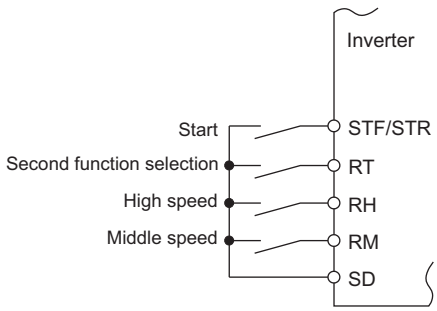

Example of the second acceleration/deceleration time

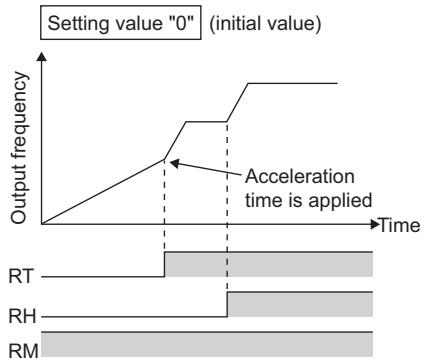

- When the RT signal is ON, second functions are selected. The following table shows the functions which can be changed to the second function.

Function	First function Parameter number	Second function Parameter number	Refer to page
Torque boost	**Pr.0**	**Pr.46**	527
Base frequency	**Pr.3**	**Pr.47**	528
Acceleration time	**Pr.7**	**Pr.44**	216
Deceleration time	**Pr.8**	**Pr.44, Pr.45**	216
Electronic thermal O/L relay	**Pr.9**	**Pr.51**	252
Free thermal	**Pr.600 to Pr.604**	**Pr.692 to Pr.696**	
Motor permissible load level*1	**Pr.607**	**Pr.608**	
Stall prevention	**Pr.22**	**Pr.48, Pr.49**	273
Applied motor*1	**Pr.71**	**Pr.450**	362
Motor constant*1	**Pr.80 to Pr.84, Pr.90 to Pr.94, Pr.298, Pr.702, Pr.706, Pr.707, Pr.711, Pr.712, Pr.717, Pr.721, Pr.724, Pr.725, Pr.859**	**Pr.453 to Pr.457, Pr.560, Pr.458 to Pr.462, Pr.738 to Pr.747, Pr.860**	366, 375
Excitation current low-speed scaling factor	**Pr.85, Pr.86**	**Pr.565, Pr.566**	531
Speed control gain (Advanced magnetic flux vector)	**Pr.89**	**Pr.569**	172
Offline auto tuning*1	**Pr.96**	**Pr.463**	366, 375
Online auto tuning *1	**Pr.95**	**Pr.574**	382
PID control	**Pr.127 to Pr.134**	**Pr.753 to Pr.758**	401
PID pre-charge function	**Pr.760 to Pr.764**	**Pr.765 to Pr.769**	425
Speed control gain	**Pr.820, Pr.821**	**Pr.830, Pr.831**	182
Analog input filter	**Pr.822**	**Pr.832**	337
Torque control gain	**Pr.824, Pr.825**	**Pr.834, Pr.835**	182
Torque detection filter	**Pr.827**	**Pr.837**	185

*1 The function can be changed by switching the RT signal ON/OFF while the inverter is stopped. If a signal is switched during operation, the operation method changes after the inverter stops. (**Pr.450** ≠ 9999)

上正科技有限公司
購買、維修、出租、手冊零組件
電話: 02-7466333
Email: service@repairtw.com
Line id: @zzzz
www.repairtw.com

NOTE

- The RT signal is assigned to terminal RT in the initial status. By setting "3" in any of **Pr.178 to Pr.189 (Input terminal function selection)**, the RT signal can be assigned to the other terminal.
- Changing the terminal assignment using **Pr.178 to Pr.189 (Input terminal function selection)** may affect the other functions. Set parameters after confirming the function of each terminal.

Parameters referred to

Pr.178 to Pr.189 (Input terminal function selection) ☞ page 355

5.9.11 Start signal operation selection

Operation of the start signal (STF/STR) can be selected.

Select the stopping method (deceleration stop or coasting) at turn-OFF of the start signal.

Use this function to stop a motor with a mechanical brake at turn-OFF of the start signal.

Pr.	Name	Initial value	Setting range	Description	
				Start signal (STF/STR)	Stop operation (Refer to page 538.)
250 G106	Stop selection	9999	0 to 100 s	STF signal: Forward rotation start STR signal: Reverse rotation start	The motor coasts to a stop after a lapse of the setting time when the start signal is turned OFF. When set to 1000 to 1100 s, the motor will coast to stop after (**Pr.250** - 1000) s.
			1000 to 1100 s	STF signal: Start signal STR signal: Forward/reverse rotation signal	
			9999	STF signal: Forward rotation start STR signal: Reverse rotation start	The motor is decelerated to a stop when the start signal is turned OFF.
			8888	STF signal: Start signal STR signal: Forward/reverse rotation signal	

◆ 2-wire type (STF signal, STR signal)

- The following figure shows the 2-wire type connection.
- As an initial setting, the forward/reverse rotation signals (STF/STR) acts as both start and stop signals. Either one turned ON will be enabled, and the operation will follow that signal. The motor will decelerate to a stop when both are turned OFF (or both are turned ON) during the operation.
- The frequency can be set by inputting 0 to 10 VDC between the speed setting input terminals 2 and 5, or with **Pr.4 to Pr.6 Multi-speed setting (high speed, middle speed, and low speed)**. (For the multi-speed operation, refer to page 249.)
- By setting **Pr.250** = "1000 to 1100, 8888", the STF signal input becomes the start command and the STR signal input becomes the forward/reverse command.

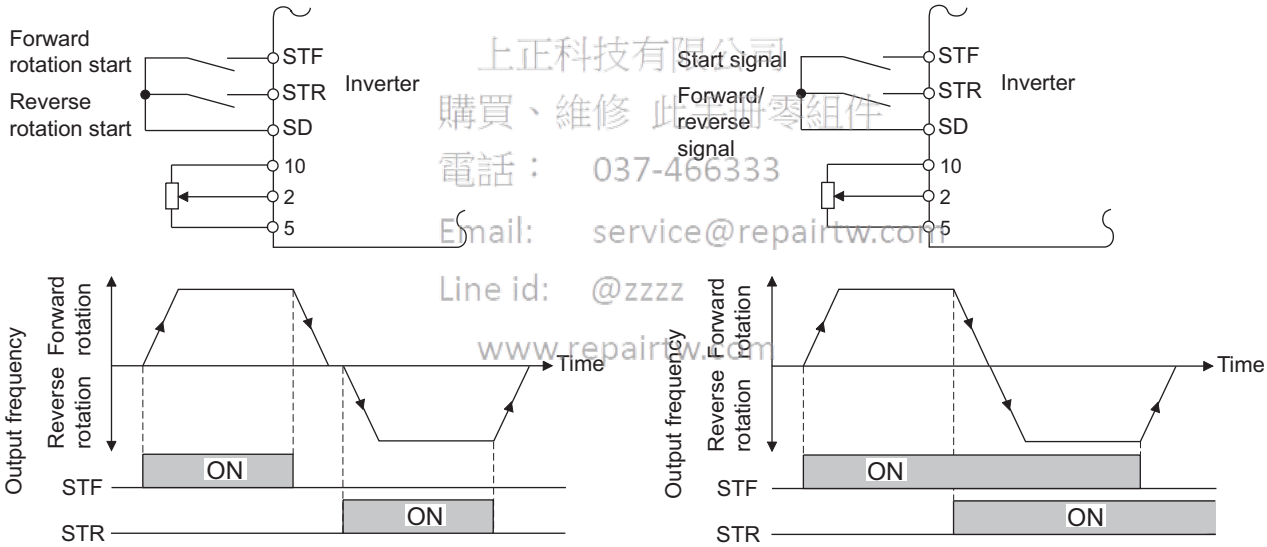

2-wire type connection example (Pr.250 = "9999")

2-wire type connection example (Pr.250 = "8888")

上正科技有限公司
購買、維修 此型號零組件
電話： 037-466333
Email: service@repairtw.com
Line id: @zzzz
www.repairtw.com

NOTE

- By setting **Pr.250** = "0 to 100, 1000 to 1100", the motor will coast to a stop when the start command is turned OFF. (Refer to page 538.)
- The STF and STR signals are assigned to the STF and STR terminals in the initial status. The STF signal can be assigned to terminal STF only using **Pr.178 STF terminal function selection**, and the STR signal can be assigned to terminal STR only using **Pr.179 STR terminal function selection**.

◆ 3-wire type (STF signal, STR signal, STP (STOP) signal)

- The following figure shows the 3-wire type connection.
- The self-holding function is enabled when the STP (STOP) signal is turned ON. In such case, the forward/reverse signal is simply used as a start signal.
- Even if a start signal (STF or STR) is turned ON and then OFF, the start command remains valid and the motor operation continues. To change the rotation direction, turn the STR (STF) signal ON once and then OFF.

- In order to decelerate the motor to a stop, turn OFF the STP (STOP) signal once.

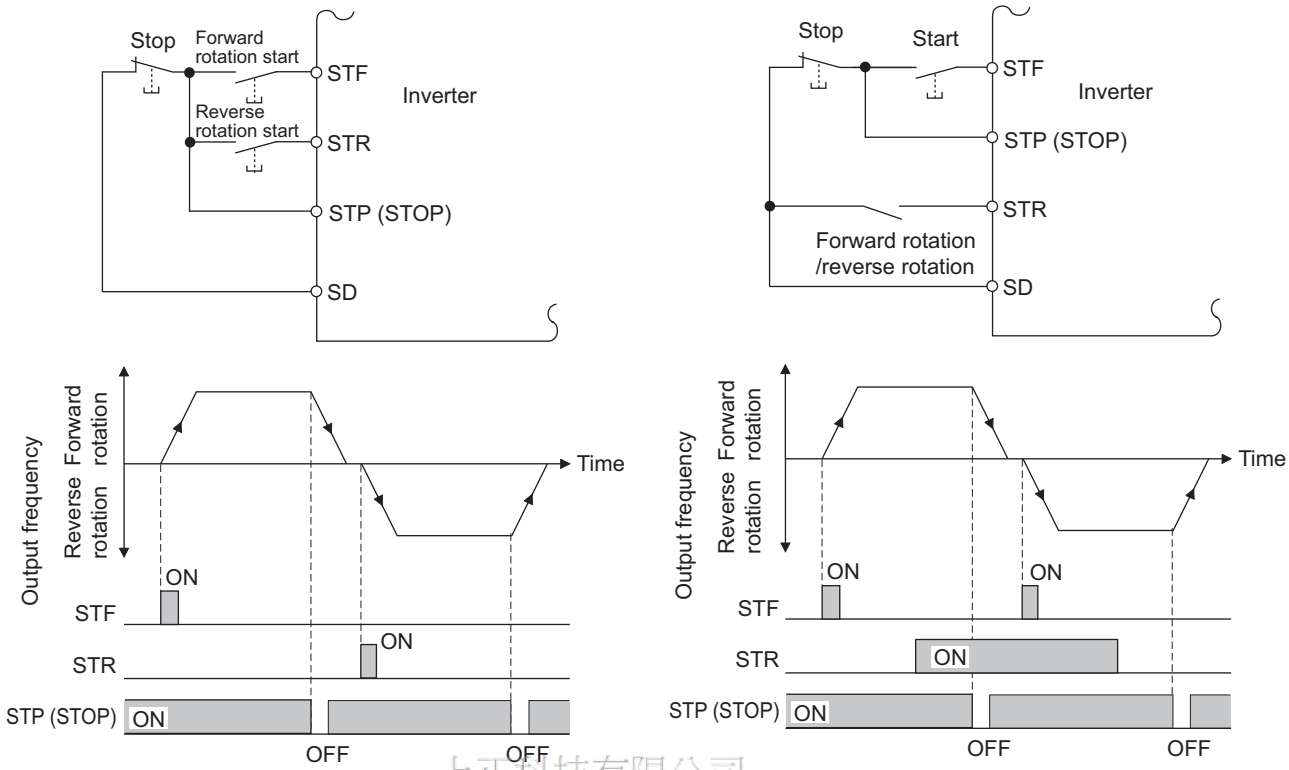

3-wire type connection example (Pr.250 = "9999") **3-wire type connection example (Pr.250 = "8888")**

上正科技有限公司
購買、維修 此手冊零組件
電話： 037-466333
Email: service@repairtw.com
Line id: @zzzz
www.repairtw.com

NOTE

- The STP (STOP) signal is assigned to terminal STP (STOP) in the initial status. Set "25" in any of **Pr.178 to Pr.189** to assign the STP (STOP) signal to another terminal.
- When the JOG operation is enabled by turning ON the JOG signal, the STOP signal will be disabled.
- Even when the output is stopped by turning ON the MRS signal, the self-holding function is not canceled.

◆ Start signal selection

STF	STR	Pr.250 setting and inverter condition	
		0 to 100 s, 9999	1000 to 1100 s, 8888
OFF	OFF	Stop	Stop
OFF	ON	Reverse rotation	
ON	OFF	Forward rotation	Forward rotation
ON	ON	Stop	Reverse rotation

Parameters referred to

Pr.4 to Pr.6 (multi-speed setting) ☞ page 249
Pr.178 to Pr.189 (Input terminal function selection) ☞ page 355

5.10 (C) Motor constant parameters

Purpose	Parameter to set			Refer to page
To select the motor to be used	**Applied motor**	**P.C100, P.C200**	**Pr.71, Pr.450**	362
To maximize the performance of the induction motor	**Offline auto tuning**	**P.C000, P.C100 to P.C105, P.C107, P.C108, P.C110, P.C120 to P.C126, P.C200 to P.C205, P.C207, P.C208, P.C210, P.C220 to P.C226**	**Pr.9, Pr.51, Pr.71, Pr.80 to Pr.84, Pr.90 to Pr.94, Pr.96, Pr.453 to Pr.463, Pr.684, Pr.707, Pr.724, Pr.744, Pr.745, Pr.859, Pr.860**	366
To maximize the performance of the PM motor	**PM motor offline auto tuning**	**P.C000, P.C100 to P.C108, P.C110, P.C120, P.C122, P.C123, P.C126, P.C130 to P.C133, P.C135, P.C150, P.C182, P.C185, P.C200 to P.C208, P.C210, P.C220, P.C222, P.C223, P.C226, P.C230 to P.C233, P.C235, P.C282, P.C285**	**Pr.9, Pr.51, Pr.71, Pr.80, Pr.81, Pr.83, Pr.84, Pr.90, Pr.92, Pr.93, Pr.96, Pr.450, Pr.453, Pr.454, Pr.456 to Pr.458, Pr.460, Pr.461, Pr.463, Pr.684, Pr.702, Pr.706, Pr.707, Pr.711, Pr.712, Pr.717, Pr.721, Pr.724, Pr.725, Pr.738 to Pr.747, Pr.788, Pr.859, Pr.860, Pr.1002, Pr.1412, Pr.1413**	375
To perform high accuracy operation without being affected by temperature and high-torque/ultra-low speed	**Online auto tuning**	**P.C111, P.C211**	**Pr.95, Pr.574**	382

上正科技有限公司
購買、維修 此手冊零組件
電話： 037-466333
Email: service@repairtw.com
Line id: @zzz
www.repairtw.com

5.10.1 Applied motor

By setting the applied motor type, the thermal characteristic appropriate for the motor can be selected.

When using a constant-torque or PM motor, the electronic thermal O/L relay function is set according to the motor.

When the Advanced magnetic flux vector control or PM motor control is selected, the motor constant necessary for control (SF-PR, SF-JR, SF-HR, SF-JRCA, SF-HRCA, MM-EFS, MM-THE4, etc.) is also selected at the same time.

Pr.	Name	Initial value	Setting range	Description
71 **C100**	**Applied motor**	0	0 to 6, 13 to 16, 20, 23, 24, 40, 43, 44, 50, 53, 54, 70, 73, 74, 210, 213, 214, 240, 243, 244, 8090, 8093, 8094, 9090, 9093, 9094	By selecting a motor, the thermal characteristic and motor constant of each motor are set.
450 **C200**	**Second applied motor**	9999	0, 1, 3 to 6, 13 to 16, 20, 23, 24, 40, 43, 44, 50, 53, 54, 70, 73, 74, 210, 213, 214, 240, 243, 244, 8090, 8093, 8094, 9090, 9093, 9094	Set this parameter when using the second motor (the same specifications as **Pr.71**).
			9999	The function is disabled.

◆ Setting the applied motor

- Refer to the following list and set the parameters according to the applied motor.

Pr.71	Pr.450	Motor	Motor constant value range when performing offline auto tuning (increment)		Electronic thermal O/L relay function		
					Standard	Constant -torque	PM
0 (**Pr.71** initial value)		Standard motor (such as SF-JR)	**Pr.82 (Pr.455) and Pr.859 (Pr.860)** • 0 to 500 A, 9999 (0.01 A)*1 • 0 to 3600 A, 9999 (0.1 A)*2 **Pr.90 (Pr.458), Pr.91 (Pr.459)** • 0 to 50 Ω, 9999 (0.001 Ω)*1 • 0 to 400 mΩ, 9999 (0.01 mΩ)*2 **Pr.92 (Pr.460), Pr.93 (Pr.461) (Induction motor)** • 0 to 6000 mH, 9999 (0.1 mH)*1 • 0 to 400 mH, 9999 (0.01 mH)*2 **Pr.92 (Pr.460), Pr.93 (Pr.461) (PM motor)** • 0 to 500 mH, 9999 (0.01 mH)*1 • 0 to 50 mH, 9999 (0.001 mH)*2 **Pr.94 (Pr.462)** • 0 to 100%, 9999 (0.1%)*1 • 0 to 100%, 9999 (0.01%)*2 **Pr.706 (Pr.738)** • 0 to 5000 mV (rad/s), 9999 (0.1 mV (rad/s))		○		
1		Constant-torque motor (SF-JRCA, etc.)				○	
2	—	Standard motor (such as SF-JR) Adjustable 5 points V/F (Refer to page 533.)			○		
20		Mitsubishi Electric standard motor (SF-JR 4P 1.5kW or lower)				○	
40		Mitsubishi Electric high-efficiency motor SF-HR			○		
50		Mitsubishi Electric constant-torque motor SF-HRCA				○	
70		Mitsubishi Electric high-performance energy-saving motor SF-PR				○	
210*3		IPM motor (MM-EFS (1500 r/min specification), MM-THE4)					○
240*3		IPM motor (MM-EFS 3000 r/min specification)					○
8090		IPM motor (other than MM-EFS or MM-THE4)				○	
9090		SPM motor				○	
3 (4)*4		Standard motor (such as SF-JR)	**Pr.82 (Pr.455), Pr.859 (Pr.860), Pr.90 (Pr.458), Pr.91 (Pr.459), Pr.92 (Pr.460), Pr.93 (Pr.461), Pr.94 (Pr.462), Pr.706 (Pr.738)** • Internal data value 0 to 65534, 9999 (1) The display increment can be changed in **Pr.684**.		○		
13 (14)*4		Constant-torque motor (SF-JRCA, etc.)				○	
23 (24)*4		Mitsubishi Electric standard motor (SF-JR 4P 1.5kW or lower)				○	
43 (44)*4		Mitsubishi Electric high-efficiency motor SF-HR			○		
53 (54)*4		Mitsubishi Electric constant-torque motor SF-HRCA				○	
73 (74)*4		Mitsubishi Electric high-performance energy-saving motor SF-PR				○	
213 (214)*3*4		IPM motor (MM-EFS (1500 r/min specification), MM-THE4)					○
243 (244)*3*4		IPM motor (MM-EFS 3000 r/min specification)					
8093 (8094)*4		IPM motor (other than MM-EFS or MM-THE4)				○	
9093 (9094)*4		SPM motor				○	
5		Standard motor	Wye connection	**Pr.82 (Pr.455) and Pr.859 (Pr.860)** • 0 to 500 A, 9999 (0.01 A)*1 • 0 to 3600 A, 9999 (0.1 A)*2 **Pr.90 (Pr.458), Pr.91 (Pr.459)** • 0 to 50 Ω, 9999 (0.001 Ω)*1 • 0 to 400 mΩ, 9999 (0.01 mΩ)*2 **Pr.92 (Pr.460), Pr.93 (Pr.461)** • 0 to 50 Ω, 9999 (0.001 Ω)*1 • 0 to 3600 mΩ, 9999 (0.1 mΩ)*2 **Pr.94 (Pr.462)** • 0 to 500 Ω, 9999 (0.01 Ω)*1 • 0 to 100 Ω, 9999 (0.01 Ω)*2	○		
15		Constant-torque motor				○	
6		Standard motor	Delta connection		○		
16		Constant-torque motor				○	
—	9999 (initial value)	No second applied motor					

*1 For the FR-F820-02330(55K) or lower and FR-F840-01160(55K) or lower.
*2 For the FR-F820-03160(75K) or higher and FR-F840-01800(75K) or higher.
*3 The setting is available for the standard structure model or the separated converter type.

上正科技有限公司
購買、維修 此手冊零組件
電話：037-466333
Email: service@repairtw.com
Line Id: @222
www.repairtw.com

*4 The same operation is performed for the both settings.

NOTE

- Regardless of the **Pr.71 (Pr.450)** setting, offline auto tuning can be performed according to **Pr.96 (Pr.463) Auto tuning setting/status**. (Refer to page 366 for offline auto tuning.)

◆ Using two types of motors (RT signal, Pr.450)

- When using two types of motors with one inverter, set **Pr.450 Second applied motor**.
- The setting value "9999" (initial value) disables the second motor.
- If **Pr.450** ≠ 9999, the following parameters will be enabled by turning ON the Second function selection (RT) signal.

Function	RT signal ON (second motor)	RT signal OFF (first motor)
Electronic thermal O/L relay	**Pr.51**	**Pr.9**
Applied motor	**Pr.450**	**Pr.71**
Motor capacity	**Pr.453**	**Pr.80**
Number of motor poles	**Pr.454**	**Pr.81**
Motor excitation current	**Pr.455**	**Pr.82**
Rated motor voltage	**Pr.456**	**Pr.83**
Rated motor frequency	**Pr.457**	**Pr.84**
Motor constant (R1)	**Pr.458**	**Pr.90**
Motor constant (R2)	**Pr.459**	**Pr.91**
Motor constant (L1)/d-axis inductance (Ld)	**Pr.460**	**Pr.92**
Motor constant (L2)/q-axis inductance (Lq)	**Pr.461**	**Pr.93**
Motor constant (X)	**Pr.462**	**Pr.94**
Auto tuning setting/status	**Pr.463**	**Pr.96**
Frequency search gain	**Pr.560**	**Pr.298**
Online auto tuning selection	**Pr.574**	**Pr.95**
Induced voltage constant (phi f)	**Pr.738**	**Pr.706**
Motor Ld decay ratio	**Pr.739**	**Pr.711**
Motor Lq decay ratio	**Pr.740**	**Pr.712**
Starting resistance tuning compensation	**Pr.741**	**Pr.717**
Starting magnetic pole position detection pulse width	**Pr.742**	**Pr.721**
Maximum motor frequency	**Pr.743**	**Pr.702**
Motor inertia (integer)	**Pr.744**	**Pr.707**
Motor inertia (exponent)	**Pr.745**	**Pr.724**
Motor protection current level	**Pr.746**	**Pr.725**
Torque current/Rated PM motor current	**Pr.860**	**Pr.859**

大正科技有限公司
購買 維修 此手冊零組件
電話： 037-466333
Email: service@repairtw.com
Line id: @zzzz
www.repairtw.com

NOTE

- The RT signal is the Second function selection signal. The RT signal also enables other second functions. (Refer to page 358.)
- The RT signal is assigned to terminal RT in the initial status. Set "3" in one of **Pr.178 to Pr.189 (Input terminal function selection)** to assign the RT signal to another terminal.
- Changing the terminal assignment using **Pr.178 to Pr.189 (input terminal function selection)** may affect the other functions. Set parameters after confirming the function of each terminal.

◆ Automatic change of torque boost for the SF-PR motor

- When the SF-PR motor is selected (**Pr.71** = "70, 73, or 74"), the **Pr.0 Torque boost** is automatically changed to enable output of the 6 Hz 150% torque under V/F control by setting **Pr.81 Number of motor poles** according to the number of the SF-PR motor poles.

NOTE

- When selecting the automatic change of torque boost for the SF-PR motor, set **Pr.14 Load pattern selection** = "0".
- When the **Pr.0** setting is changed from its initial value, the automatic change is not performed.

◆ Automatic change of Pr.0 Torque boost and Pr.12 DC injection brake operation voltage

- When initial values are set in **Pr.0** and **Pr.12**, the **Pr.0** and **Pr.12** settings are automatically changed to the values in the following table by changing the **Pr.71** setting.

Inverter		Pr.0 value (%) after automatic change						Pr.12 value (%) after automatic change		
FR-F820-[]	FR-F840-[]	Standard motor*1	Constant-torque motor*2	SF-PR*3				Standard motor*1	Constant-torque motor*2	SF-PR*3
				Pr.81 ≠ 2, 4, 6	Pr.81 = 2	Pr.81 = 4	Pr.81 = 6			
00046(0.75K)	00023(0.75K)	6	6	4	7.4	6	6.4	4	4	4
00077(1.5K)	00038(1.5K)	4	4	3	5.8	5	3.7	4	4	2.5
00105(2.2K)	00052(2.2K)	4	4	2.5	6	4.5	3.3	4	4	2.5
00167(3.7K)	00083(3.7K)	4	4	2.5	6.4	4.5	4.2	4	4	2.5
00250(5.5K)	00126(5.5K)	3	2	2	4.5	3.7	3.3	4	2	2
00340(7.5K)	00170(7.5K)	3	2	2	4.4	4.5	3.8	4	2	2
00490(11K)	00250(11K)	2	2	1.5	3.5	3.3	3.5	2	2	1.5
00630(15K)	00310(15K)	2	2	1.5	4.5	3	3.5	2	2	1.5
00770(18.5K)	00380(18.5K)	2	2	1.5	4	3.2	3	2	2	1.5
00930(22K)	00470(22K)	2	2	1.5	2.5	3.4	3	2	2	1
01250(30K)	00620(30K)	2	2	1	3	2	2.5	2	2	1
01540(37K)	00770(37K)	2	2	1	2	2.5	2.6	2	2	1
01870(45K)	00930(45K)	1.5	1.5	1	2	2	2.4	2	2	1
02330(55K)	01160(55K)	1.5	1.5	0.7	2	2	0.7	2	2	1
03160(75K) or higher	01800(75K) or higher	1	1	1	1	1	1	1	1	1

*1 **Pr.71** = "0, 2 to 6, 20, 23, 24, 40, 43, or 44" (standard motor)
*2 **Pr.71** = "1, 13 to 16, 50, 53, or 54" (constant-torque motor)
*3 **Pr.71** = "70, 73, or 74" (SF-PR)

上正科技有限公司
購買、維修 此手冊零組件
電話： 037-466333
Email: service@repairtw.com
Line Id: @zzzz
www.repairtw.com

NOTE

- When the **Pr.0** and **Pr.12** settings are changed from their initial values, the automatic change is not performed.
- When the SF-PR motor is selected (**Pr.71** = "70, 73, or 74"), the output current may become large due to a small load by setting **Pr.81 Number of motor poles** according to the number of the SF-PR motor poles.
- When the SF-PR motor is used, the output current tends to increase compared with the case where the SF-JR or SF-HR motor is used. Depending on the load conditions, the output current may increase even though the torque boost value has been automatically changed. When the protective function such as the electronic thermal O/L relay (E.THT, E.THM) or stall prevention (OL, E.OLT) is activated, adjust the **Pr.0 Torque boost** according to the load.

⚠ CAUTION

- Make sure to set this parameter correctly according to the motor used. Incorrect setting may cause the motor and the inverter to overheat and burn.

Parameters referred to

Pr.0 Torque boost ☞ page 527
Pr.12 DC injection brake operation voltage ☞ page 535
Pr.14 Load pattern selection ☞ page 530
Pr.96 Auto tuning setting/status ☞ page 530
Pr.100 to Pr.109 (Adjustable 5 points V/F) ☞ page 533
Pr.178 to Pr.189 (Input terminal function selection) ☞ page 355
Pr.684 Tuning data unit switchover ☞ page 366

5.10.2 Offline auto tuning

Magnetic flux

The offline auto tuning enables the optimal operation of a motor.

- Under Advanced magnetic flux vector control, automatic measurement of motor constants (offline auto tuning) enables optimal operation of motors even when motor constants vary, when a motor of another company is used, or when the wiring distance is long.

For the offline auto tuning for a PM motor, refer to page 375.

Pr.	Name	Initial value	Setting range	Description
684 C000	Tuning data unit switchover	0	0	Internal data converted value
			1	The value is indicated in A, Ω, mH, or %.
71 C100	Applied motor	0	0 to 6, 13 to 16, 20, 23, 24, 40, 43, 44, 50, 53, 54, 70, 73, 74, 210, 213, 214, 240, 243, 244, 8090, 8093, 8094, 9090, 9093, 9094	By selecting a motor, the thermal characteristic and motor constant of each motor are set.
80 C101	Motor capacity	9999	0.4 to 55 kW[*1]	Set the applied motor capacity.
			0 to 3600 kW[*2]	
			9999	V/F control
81 C102	Number of motor poles	9999	2, 4, 6, 8, 10, 12	Set the number of motor poles.
			9999	V/F control
9 C103	Electronic thermal O/L relay	Inverter rated current	0 to 500 A[*1]	Set the rated motor current.
			0 to 3600 A[*2]	
83 C104	Rated motor voltage	200/400 V[*3]	0 to 1000 V	Set the rated motor voltage (V).
84 C105	Rated motor frequency	9999	10 to 400 Hz	Set the rated motor frequency (Hz).
			9999	The setting value of **Pr.3 Base frequency** is used.
707 C107	Motor inertia (integer)	9999	10 to 999, 9999	Set the motor inertia. 9999: The constant value of Mitsubishi Electric motor (SF-JR, SF-HR, SF-JRCA, or SF-HRCA and so on) is used.
724 C108	Motor inertia (exponent)	9999	0 to 7, 9999	
96 C110	Auto tuning setting/status	0	0	No offline auto tuning
			1	Offline auto tuning is performed without the motor rotating.
			11	Offline auto tuning is performed without the motor rotating (V/F control, IPM motor MM-EFS/MM-THE4). (Refer to page 454.)
			101	Offline auto tuning is performed with the motor rotating.
90 C120	Motor constant (R1)	9999	0 to 50 Ω, 9999[*4]	Tuning data (The value measured by offline auto tuning is automatically set.) 9999: The constant value of Mitsubishi Electric motor (SF-PR, SF-JR, SF-HR, SF-JRCA, SF-HRCA and so on) is used.
			0 to 400 mΩ, 9999[*2*4]	
91 C121	Motor constant (R2)	9999	0 to 50 Ω, 9999[*1*4]	
			0 to 400 mΩ, 9999[*2*4]	
92 C122	Motor constant (L1)/d-axis inductance (Ld)	9999	0 to 6000 mH, 9999[*1*4]	
			0 to 400 mH, 9999[*2*4]	
93 C123	Motor constant (L2)/q-axis inductance (Lq)	9999	0 to 6000 mH, 9999[*1*4]	
			0 to 400 mH, 9999[*2*4]	
94 C124	Motor constant (X)	9999	0 to 100%, 9999[*4]	
82 C125	Motor excitation current	9999	0 to 500 A, 9999[*1*4]	
			0 to 3600 A, 9999[*2*4]	
859 C126	Torque current/ Rated PM motor current	9999	0 to 500 A, 9999[*1*4]	
			0 to 3600 A, 9999[*2*4]	
298 A711	Frequency search gain	9999	0 to 32767	The offline auto tuning automatically sets the gain required for the frequency search.
			9999	The constant value of Mitsubishi Electric motor (SF-PR, SF-JR, SF-HR, SF-JRCA, SF-HRCA and so on) is used.

上正科技有限公司
購買、維修 此手冊零組件
電話： 037-466333
Email: service@repairtw.com
Line id: @zzzz
www.repairtw.com

Pr.	Name	Initial value	Setting range	Description
450 C200	Second applied motor	9999	0, 1, 3 to 6, 13 to 16, 20, 23, 24, 40, 43, 44, 50, 53, 54, 70, 73, 74, 210, 213, 214, 240, 243, 244, 8090, 8093, 8094, 9090, 9093, 9094	Set this parameter when using the second motor (the same specifications as **Pr.71**).
			9999	The function is disabled.
453 C201	Second motor capacity	9999	0.4 to 55 kW*1	Set the capacity of the second motor.
			0 to 3600 kW*2	
			9999	V/F control
454 C202	Number of second motor poles	9999	2, 4, 6, 8, 10, 12	Set the number of poles of the second motor.
			9999	V/F control
51 C203	Second electronic thermal O/L relay	9999	0 to 500 A*1	This function is enabled when the RT signal is ON. Set the rated motor current.
			0 to 3600 A*2	
			9999	Second electronic thermal O/L relay disabled.
456 C204	Rated second motor voltage	200/400 V*3	0 to 1000 V	Set the rated voltage (V) of the second motor.
457 C205	Rated second motor frequency	9999	10 to 400 Hz	Set the rated frequency (Hz) of the second motor.
			9999	The **Pr.84 Rated motor frequency** setting is used.
744 C207	Second motor inertia (integer)	9999	10 to 999, 9999	Set the inertia of the second motor. 9999: The constant value of Mitsubishi Electric motor (SF-PR, SF-JR, SF-HR, SF-JRCA, SF-HRCA and so on) is used.
745 C208	Second motor inertia (exponent)	9999	0 to 7, 9999	
463 C210	Second motor auto tuning setting/status	0	0	No auto tuning for the second motor.
			1	Offline auto tuning is performed without the second motor rotating.
			11	Offline auto tuning is performed without the motor rotating (V/F control, IPM motor MM-EFS/MM-THE4). (Refer to page 454.)
			101	Offline auto tuning is performed with the second motor rotating.
458 C220	Second motor constant (R1)	9999	0 to 50 Ω, 9999*1*4	Tuning data of the second motor (The value measured by offline auto tuning is automatically set.) 9999: The constant value of Mitsubishi Electric motor (SF-PR, SF-JR, SF-HR, SF-JRCA, SF-HRCA and so on) is used.
			0 to 400 mΩ, 9999*2*4	
459 C221	Second motor constant (R2)	9999	0 to 50 Ω, 9999*1*4	
			0 to 400 mΩ, 9999*2*4	
460 C222	Second motor constant (L1) / d-axis inductance (Ld)	9999	0 to 6000 mH, 9999*1*4	
			0 to 400 mH, 9999*2*4	
461 C223	Second motor constant (L2) / q-axis inductance (Lq)	9999	0 to 6000 mH, 9999*1*4	
			0 to 400 mH, 9999*2*4	
462 C224	Second motor constant (X)	9999	0 to 100%, 9999*4	
455 C225	Second motor excitation current	9999	0 to 500 A, 9999*1*4	
			0 to 3600 A, 9999*2*4	
860 C226	Second motor torque current/ Rated PM motor current	9999	0 to 500 A, 9999*1*4	
			0 to 3600 A, 9999*2*4	
560 A712	Second frequency search gain	9999	0 to 32767	The offline auto tuning automatically sets the gain required for the frequency search of the second motor.
			9999	The constant value of Mitsubishi Electric motor (SF-PR, SF-JR, SF-HR, SF-JRCA, SF-HRCA and so on) is used for the second motor.

*1 For the FR-F820-02330(55K) or lower and FR-F840-01160(55K) or lower.
*2 For the FR-F820-03160(75K) or higher and FR-F840-01800(75K) or higher.
*3 The initial value differs according to the voltage class (200 V / 400 V).
*4 The setting range and unit change according to the **Pr.71 (Pr.450)** setting.

上正科技有限公司
購買、維修 此手冊需給客
電話： 037-466383
Email: service@repairtw.com
Line id: @372ztfzt
www.repairtw.com

Point

- The function is enabled under Advanced magnetic flux vector control.
- By using the offline auto tuning function, the optimum operation characteristics are obtained for a motor other than Mitsubishi Electric standard motors (SF-JR 0.4 kW or higher), high-efficiency motors (SF-HR 0.4 kW or higher), Mitsubishi Electric constant-torque motors (SF-JRCA 4P, SF-HRCA 0.4 kW to 55 kW), or Mitsubishi Electric high-performance energy-serving motor (SF-PR), such as an induction motor of other manufacturers, SF-JRC, or SF-TH, or with a long wiring length (30 m or longer).
- Tuning is enabled even when a load is connected to the motor.
- Offline auto tuning is performed without the motor rotating (**Pr.96** = "1") or with the motor rotating (**Pr.96** = "101"). The tuning is more accurate when the motor rotates.
- Reading/writing of the motor constants tuned by offline auto tuning are enabled. The offline auto tuning data (motor constants) can be copied to another inverter using the operation panel.
- The offline auto tuning status can be monitored on the operation panel or the parameter unit.

◆ Before performing offline auto tuning

Check the following points before performing offline auto tuning:

- A value other than "9999" is set in **Pr.80** and **Pr.81**, and Advanced magnetic flux vector control is selected.
- A motor is connected. (Check that the motor is not rotated by an external force during tuning.)
- For the motor capacity, the rated motor current should be equal to or less than the rated inverter current. (The motor capacity must be 0.4 kW or higher.) If a motor with substantially low rated current compared with the inverter rated current, however, is used, speed and torque accuracies may deteriorate due to torque ripples, etc. Set the rated motor current to about 40% or higher of the inverter rated current.
- Tuning is not available for a high-slip motor, high-speed motor, or special motor.
- The maximum frequency is 400 Hz.
- The motor may rotate slightly even if offline auto tuning is performed without the motor rotating (**Pr.96 Auto tuning setting/status** = "1"). (The slight motor rotation does not affect the tuning performance.)
  Fix the motor securely with a mechanical brake, or before tuning, make sure that it is safe even if the motor rotates. (Caution is required especially in vertical lift applications.)
- Check the following points for offline auto tuning with the motor rotating (**Pr.96 Auto tuning setting/status** = "101").

  Torque is not sufficient during tuning.
  The motor can be rotated up to the speed close to the rated speed.
  The mechanical brake is released.

上正科技有限公司
購買、維修 此手冊委組件
電話: 07-4603333
Email: service@repairtw.com
Line id: @zzzz
www.repairtw.com

- Offline auto tuning is not performed correctly when the surge voltage suppression filter (FR-ASF-H/FR-BMF-H) is inserted between the inverter and motor. Be sure to remove it before performing tuning.

◆ Setting

- To perform tuning, set the following parameters about the motor.

First motor Pr.	Second motor Pr.	Name	Initial value	Description
80	453	Motor capacity	9999 (V/F control)	Set the motor capacity (kW).
81	454	Number of motor poles	9999 (V/F control)	Set the number of motor poles (2 to 12).
9	51	Electronic thermal O/L relay	Inverter rated current	Set the rated motor current (A).
83	456	Rated motor voltage	200 V / 400 V*1	Set the rated motor voltage (V) printed on the motor's rating plate.
84	457	Rated motor frequency	9999	Set the rated motor frequency (Hz). When the setting is "9999", the **Pr.3 Base frequency** setting is used.
71	450	Applied motor	0 (standard motor)	Set this parameter according to the motor. Three types of motor constant setting ranges, units and tuning data can be stored according to settings.
96	463	Auto tuning setting/ status	0	Set "1" or "101". 1: Tuning is performed without the motor rotating. (Excitation noise occurs at this point.) 101: Tuning is performed with the motor rotating. The motor can rotate up to the speed near the rated motor frequency.

*1 The initial value differs according to the voltage class (200 V / 400 V).

*2 Set **Pr.71 Applied motor** according to the motor to be used and the motor constant setting range. According to the **Pr.71** setting, the range of the motor constant parameter setting values and units can be changed. (For other setting values of **Pr.71**, refer to page 362.)

Motor		Pr.71 setting		
		Motor constant parameter mH, %, and A unit setting	Motor constant parameter internal data setting	Motor constant parameter Ω, mΩ, and A unit setting
Mitsubishi Electric standard motor Mitsubishi Electric high-efficiency motor	SF-JR, SF-TH	0 (initial value)	3 (4)	—
	SF-JR 4P 1.5 kW or lower	20	23 (24)	—
	SF-HR	40	43 (44)	—
	Others	0 (initial value)	3 (4)	—
Mitsubishi Electric constant-torque motor	SF-JRCA 4P, SF-TH (constant-torque)	1	13 (14)	—
	SF-HRCA	50	53 (54)	—
	Others (SF-JRC, etc.)	1	13 (14)	—
Mitsubishi Electric high-performance energy-saving motor	SF-PR	70	73 (74)	—
Other manufacturer's standard motor	—	0 (initial value)	3 (4)	5 (wye connection motor) 6 (delta connection motor)
Other manufacturer's constant-torque motor	—	1	13 (14)	15 (wye connection motor) 16 (delta connection motor)

NOTE

- When **Pr.11 DC injection brake operation time** = "0" or **Pr.12 DC injection brake operation voltage** = "0", offline auto tuning is performed at the initial setting of **Pr.11** or **Pr.12**.
- If "wye connection" or "delta connection" is incorrectly selected in **Pr.71**, Advanced magnetic flux vector control is not performed properly.

上店科技有限公司
購買、維修 此手冊零組件
電話： 037-466333
Email: service@repairtw.com
Line id: @zzzz
www.repairtw.com

- For tuning accuracy improvement, set the following parameters when the motor constants are known in advance.

First motor Pr.	Second motor Pr.	Name	Mitsubishi Electric motor (SF-JR, SF-HR, SF-JRCA, or SF-HRCA)	Other motors
707	744	Motor inertia (integer)	9999 (initial value)	Motor inertia*3 Jm = **Pr.707** × 10^(-**Pr.724**) (kg·m^2)
724	745	Motor inertia (exponent)		

*3 The setting is valid only when a value other than "9999" is set in both **Pr.707 (Pr.744)** and **Pr.724 (Pr.745)**.

◆ Performing tuning

Point

- Before performing tuning, check the monitor display of the operation panel or parameter unit if the inverter is in the state ready for tuning. The motor starts by turning ON the start command while tuning is unavailable.

- In the PU operation mode, press FWD / REV on the operation panel.
  For External operation, turn ON the start command (STF signal or STR signal). Tuning starts.

NOTE

- Satisfy the required inverter start conditions to start offline auto tuning. For example, stop the input of the MRS signal.
- To force tuning to end, use the MRS or RES signal or STOP RESET on the operation panel.
  (Turning OFF the start signal (STF signal or STR signal) also ends tuning.)
- During offline auto tuning, only the following I/O signals are valid (initial value).
  Input terminals <valid signals>: STP (STOP), OH, MRS, RT, RES, STF, STR, S1, and S2
  Output terminals: RUN, OL, IPF, FM/CA, AM, A1B1C1, and So (SO)
- When the rotation speed and the output frequency are selected for terminals FM/CA and AM, the progress status of offline auto tuning is output in 15 steps from FM/CA and AM.
- Do not perform ON/OFF switching of the Second function selection (RT) signal during offline auto tuning. Auto tuning will not be performed properly.
- When the offline auto tuning with motor rotation is selected (**Pr.96 Auto tuning setting/status** = "101"), take caution and ensure safety against the rotation of the motor.
- Since the Inverter running (RUN) signal turns ON when tuning is started, pay close attention especially when a sequence which releases a mechanical brake by the RUN signal has been designed.
- When executing offline auto tuning, input the operation command after switching ON the main circuit power (R/L1, S/L2, T/L3) of the inverter.
- While **Pr.79 Operation mode selection** = "7", turn ON the PU operation external interlock (X12) signal for tuning in the PU operation mode.

- During tuning, the monitor is displayed on the operation panel as follows.

Tuning status	Operation panel (FR-DU08) display		LCD operation panel (FR-LU08) display	
	Pr.96 = 1	Pr.96 = 101	Pr.96 = 1	Pr.96 = 101
	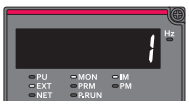	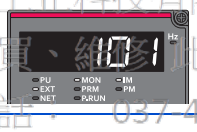	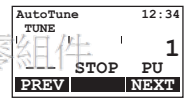	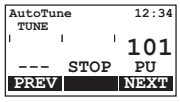
(2) During tuning	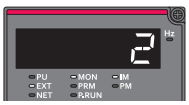		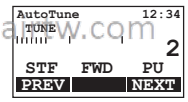	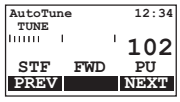
(3) Normal completion	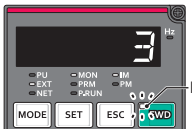 Blinking	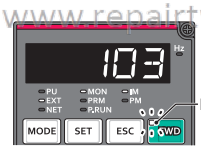 Blinking	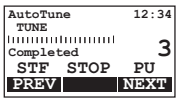	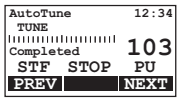

上正科技有限公司
購買、維修、批手冊零組件
電話： 037-466333
Email: service@repairtw.com
Line: @zzz
www.repairtw.com

- Note: Offline auto tuning time (with the initial setting)

Offline auto tuning setting	Time
No motor rotation (**Pr.96** = "1")	About 25 to 120 s (The time depends on the inverter capacity and motor type.)
With motor rotation (**Pr.96** = "101")	About 40 s (The following offline auto tuning time is set according to the acceleration/deceleration time setting. Offline auto tuning time = acceleration time + deceleration time + about 30 s)

- When offline auto tuning ends, press STOP RESET on the operation panel during PU operation. For External operation, turn OFF the start signal (STF signal or STR signal).
  This operation resets the offline auto tuning, and the PU's monitor display returns to the normal indication.
  (Without this operation, next operation cannot be started.)

NOTE

- The motor constants measured once during offline auto tuning are stored as parameters and their data are held until offline auto tuning is performed again. However, the tuning data is cleared when performing All parameter clear.
- Changing **Pr.71 (Pr.450)** after tuning completion will change the motor constant. For example, if "3" is set in **Pr.71** after tuning is performed with **Pr.71** = "0", the tuning data becomes invalid. To use the tuned data, set "0" again in **Pr.71**.

- If offline auto tuning has ended in error (see the following table), motor constants are not set. Perform an inverter reset and perform tuning again.

Error display	Error cause	Countermeasures
8	Forced end	Set **Pr.96** = "1 or 101" and try again.
9	Inverter protective function operation	Make the setting again.
91	The current limit (stall prevention) function is activated.	Set the acceleration/deceleration time longer. Set **Pr.156 Voltage reduction selection during stall prevention operation** = "1".
92	The converter output voltage fell to 75% of the rated voltage.	Check for the power supply voltage fluctuation. Check the **Pr.84 Rated motor frequency** setting.
93	Calculation error. The motor is not connected.	Check the **Pr.83** and **Pr.84** settings. Check the motor wiring and make the setting again.
94	Rotation tuning frequency setting error (The frequency command for the tuning was given to exceed the maximum frequency setting, or to be in the frequency jump range.)	Check the **Pr.1 Maximum frequency** and **Pr.31 to Pr.36 Frequency jump** settings.

- When tuning is ended forcibly by pressing STOP RESET or turning OFF the start signal (STF or STR) during tuning, offline auto tuning does not end properly. (The motor constants have not been set.)
  Perform an inverter reset and perform tuning again.
- When the rated power supply of the motor is 200/220 V (400/440 V) 60 Hz, set the rated motor current multiplied by 1.1 in **Pr.9 Electronic thermal O/L relay** after tuning is complete.
- For a motor with a PTC thermistor, thermal protector, or other thermal detector, set "0" (motor overheat protection by inverter invalid) in **Pr.9** to protect the motor from overheating.

NOTE

- An instantaneous power failure occurring during tuning will result in a tuning error. After power is restored, the inverter starts normal operation. Therefore, when the STF (STR) signal is ON, the motor starts forward (reverse) rotation.
- Any fault occurring during tuning is handled as in the normal operation. However, if the retry function is set, no retry is performed.
- The set frequency monitor displayed during the offline auto tuning is 0 Hz.

上揚科技有限公司
購買、維修、此手冊零組件
電話： 037-466333
Email: service@repairtw.com
Line id: @zzzz
www.repairtw.com

⚠CAUTION

- Note that the motor may start running suddenly.
- For performing offline auto tuning with the motor rotating in vertical lift applications, etc., caution is required to avoid falling due to insufficient torque.

◆ Changing the motor constants

- The motor constants can be set directly when the motor constants are known in advance, or by using the data measured during offline auto tuning.
- According to the **Pr.71 (Pr.450)** setting, the range of the motor constant parameter setting values and units can be changed. The changed settings are stored in the EEPROM as the motor constant parameters.

◆ Changing the motor constants (when setting the Pr.92 and Pr.93 motor constants in units of mH)

- Set **Pr.71** as follows.

Motor		Pr.71 setting
Mitsubishi Electric standard motor Mitsubishi Electric high-efficiency motor	SF-JR	0 (initial value)
	SF-JR 4P 1.5 kW or lower	20
	SF-HR	40
Mitsubishi Electric constant-torque motor	SF-JRCA 4P	1
	SF-HRCA	50
Mitsubishi Electric high-performance energy-saving motor	SF-PR	70

- Use the following formula to find the **Pr.94** setting value and set a desired value as the motor constant parameter.

$$\text{The setting value of } \textbf{Pr.94} = \left(1 - \frac{M^2}{L1 \times L2}\right) \times 100(\%)$$

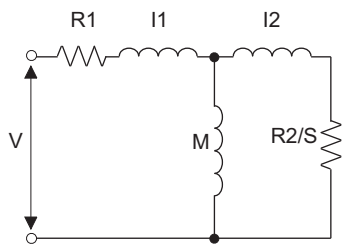

R1: Primary resistance
R2: Secondary resistance
I1: Primary leakage inductance
I2: Secondary leakage inductance
M: Excitation inductance
S: Slip

L1= I1+ M: Primary inductance
L2= I2+ M: Secondary inductance

Equivalent circuit diagram of the motor

First motor Pr.	Second motor Pr.	Name	Setting range	Setting increments	Initial value
82	455	Motor excitation current (no load current)	0 to 500 A, 9999*1	0.01 A*1	9999
			0 to 3600 A, 9999*2	0.1 A*2	
90	458	Motor constant (R1)	0 to 50 Ω, 9999*1	0.001 Ω*1	
			0 to 400 mΩ, 9999*2	0.01 mΩ*2	
91	459	Motor constant (R2)	0 to 50 Ω, 9999*1	0.001 Ω*1	
			0 to 400 mΩ, 9999*2	0.01 mΩ*2	
92	460	Motor constant (L1)/d-axis inductance (Ld)	0 to 6000 mH, 9999*1	0.1 mH*1	
			0 to 400 mH, 9999*2	0.01 mH*2	
93	461	Motor constant (L2)/q-axis inductance (Lq)	0 to 6000 mH, 9999*1	0.1 mH*1	
			0 to 400 mH, 9999*2	0.01 mH*2	
94	462	Motor constant (X)	0 to 100%, 9999	0.1%*1	
				0.01%*2	
859	860	Torque current/Rated PM motor current	0 to 500 A, 9999*1	0.01 A*1	
			0 to 3600 A, 9999*2	0.1 A*2	
298	560	Frequency search gain	0 to 32767, 9999	1	

*1 For the FR-F820-02330(55K) or lower, and FR-F840-01160(55K) or lower.
*2 For the FR-F820-03160(75K) or higher, and FR-F840-01800(75K) or higher.

上正科技有限公司
購買、維修 此手冊零組件
電話： 037-466333
Email: service@repairtw.com
Line Id: @zz22
www.repairtw.com

NOTE

- If "9999" is set, tuning data will be invalid and the constant values for Mitsubishi Electric motors (SF-PR, SF-JR, SF-HR, SF-JRCA, SF-HRCA and so on) are used.

◆ Changing the motor constants (when setting motor constants in the internal data of the inverter)

- Set **Pr.71** as follows.

Motor		Pr.71 setting
Mitsubishi Electric standard motor Mitsubishi Electric high-efficiency motor	SF-JR, SF-TH	3 (4)
	SF-JR 4P 1.5 kW or lower	23 (24)
	SF-HR	43 (44)
	Others	3 (4)
Mitsubishi Electric constant-torque motor	SF-JRCA 4P, SF-TH (constant-torque)	13 (14)
	SF-HRCA	53 (54)
	Others (SF-JRC, etc.)	13 (14)
Mitsubishi Electric high-performance energy-saving motor	SF-PR	73 (74)
Other manufacturer's standard motor	—	3 (4)
Other manufacturer's constant-torque motor	—	13 (14)

- Set desired values as the motor constant parameters. The display units of the read motor constants can be changed with **Pr.684 Tuning data unit switchover**. Setting **Pr.684** = "1" disables parameter setting changes.

First motor Pr.	Second motor Pr.	Name	Pr.684 = 0 (initial value)		Pr.684 = 1		Initial value
			Setting range	Setting increments	Range indication	Unit indication	
82	455	Motor excitation current	0 to ***, 9999	1	0 to 500 A, 9999*1	0.01 A*1	9999
					0 to 3600 A, 9999*2	0.1 A*2	
90	458	Motor constant (R1)			0 to 50 Ω, 9999*1	0.001 Ω*1	
					0 to 400 mΩ, 9999*2	0.01 mΩ*2	
91	459	Motor constant (R2)			0 to 50 Ω, 9999*1	0.001 Ω*1	
					0 to 400 mΩ, 9999*2	0.01 mΩ*2	
92	460	Motor constant (L1)/d-axis inductance (Ld)			0 to 6000 mH, 9999*1	0.1 mH*1	
					0 to 400 mH, 9999*2	0.01 mH*2	
93	461	Motor constant (L2)/q-axis inductance (Lq)			0 to 6000 mH, 9999*1	0.1 mH*1	
					0 to 400 mH, 9999*2	0.01 mH*2	
94	462	Motor constant (X)			0 to 100%, 9999	0.1%*1	
						0.01%*2	
859	860	Torque current/Rated PM motor current			0 to 500 A, 9999*1	0.01 A*1	
					0 to 3600 A, 9999*2	0.1 A*2	
298	560	Frequency search gain	0 to 32767, 9999	1	0 to 32767, 9999	1	

*1 For the FR-F820-02330(55K) or lower, and FR-F840-01160(55K) or lower.
*2 For the FR-F820-03160(75K) or higher, and FR-F840-01800(75K) or higher.

NOTE

- As the motor constants measured in the offline auto tuning have been converted into internal data (****), refer to the following setting example when making setting.

  Setting example: To slightly increase the **Pr.90** value (5%)
  When "2516" is displayed for **Pr.90**, set 2642 (2516 × 1.05 = 2641.8) in **Pr.90**.
  (The value displayed has been converted into a value for internal use. Therefore, simple addition of a value to the displayed value does not bring the desired effect.)

- If "9999" is set, tuning data will be invalid and the constant values for Mitsubishi Electric motors (SF-PR, SF-JR, SF-HR, SF-JRCA, SF-HRCA and so on) are used.

上正科技有限公司
購買、維修 此手冊零組件
電話： 03-7466333
Email： service@repairtw.com
Line id： @222
www.repairtw.com

◆ Changing the motor constants (when setting the Pr.92 and Pr.93 motor constants in units of Ω)

- Set **Pr.71** as follows.

Applied motor	Pr.71 setting	
	Wye connection motor	Delta connection motor
Standard motor	5	6
Constant-torque motor	15	16

- Set desired values as the motor constant parameters.

Iq = torque current, I_{100} = rated current, I_0 = no load current

$$Iq = \sqrt{I_{100}^2 - I_0^2}$$

First motor Pr.	Second motor Pr.	Name	Setting range	Setting increments	Initial value
82	455	Motor excitation current (no load current)	0 to 500 A, 9999*1	0.01 A*1	9999
			0 to 3600 A, 9999*2	0.1 A*2	
90	458	Motor constant (r1)	0 to 50 Ω, 9999*1	0.001 Ω*1	
			0 to 400 mΩ, 9999*2	0.01 mΩ*2	
91	459	Motor constant (r2)	0 to 50 Ω, 9999*1	0.001 Ω*1	
			0 to 400 mΩ, 9999*2	0.01 mΩ*2	
92	460	Motor constant (x1)	0 to 50 Ω, 9999*1	0.001 Ω*1	
			0 to 3600 mΩ, 9999*2	0.1 mΩ*2	
93	461	Motor constant (x2)	0 to 50 Ω, 9999*1	0.001 Ω*1	
			0 to 3600 mΩ, 9999*2	0.1 mΩ*2	
94	462	Motor constant (xm)	0 to 500 Ω, 9999*1	0.01 Ω	
			0 to 100 Ω, 9999*2		
859	860	Torque current/Rated PM motor current	0 to 500 A, 9999*1	0.01 A*1	
			0 to 3600 A, 9999*2	0.1 A*2	
298	560	Frequency search gain	0 to 32767, 9999	1	

*1 For the FR-F820-02330(55K) or lower, and FR-F840-01160(55K) or lower.
*2 For the FR-F820-03160(75K) or higher, and FR-F840-01800(75K) or higher.

NOTE

上正科技有限公司
購買、維修 此手冊零組件
電話： 037-466333
Email: service@repairtw.com
Line id: @zzzz
www.repairtw.com

- If "wye connection" or "delta connection" is incorrectly selected in **Pr.71**, Advanced magnetic flux vector control is not performed properly.
- If "9999" is set, tuning data will be invalid and the constant values for Mitsubishi Electric motors (SF-PR, SF-JR, SF-HR, SF-JRCA, SF-HRCA and so on) are used.

◆ Tuning the second motor

- When one inverter switches the operation between two different motors, set the second motor in **Pr.450 Second applied motor**. (Refer to page 362.) In the initial setting, no second motor is applied.
- Turning ON the RT signal enables the parameter settings for the second motor as follows.

Function	RT signal-ON (second motor)	RT signal-OFF (first motor)
Motor capacity	**Pr.453**	**Pr.80**
Number of motor poles	**Pr.454**	**Pr.81**
Motor excitation current	**Pr.455**	**Pr.82**
Rated motor voltage	**Pr.456**	**Pr.83**
Rated motor frequency	**Pr.457**	**Pr.84**
Motor constant (R1)	**Pr.458**	**Pr.90**
Motor constant (R2)	**Pr.459**	**Pr.91**
Motor constant (L1)/d-axis inductance (Ld)	**Pr.460**	**Pr.92**
Motor constant (L2)/q-axis inductance (Lq)	**Pr.461**	**Pr.93**
Motor constant (X)	**Pr.462**	**Pr.94**
Auto tuning setting/status	**Pr.463**	**Pr.96**
Frequency search gain	**Pr.560**	**Pr.298**

NOTE

- The RT signal is assigned to terminal RT in the initial status. Set "3" in one of **Pr.178 to Pr.189 (Input terminal function selection)** to assign the RT signal to another terminal.
- Changing the terminal assignment using **Pr.178 to Pr.189 (input terminal function selection)** may affect the other functions. Set parameters after confirming the function of each terminal.

Parameters referred to

Pr.1 Maximum frequency ☞ page 271
Pr.9 Electronic thermal O/L relay ☞ page 252
Pr.31 to Pr.36 Frequency jump ☞ page 272
Pr.71 Applied motor ☞ page 362
Pr.156 Stall prevention operation selection ☞ page 273
Pr.178 to Pr.189 (Input terminal function selection) ☞ page 355
Pr.190 to Pr.196 (Output terminal function selection) ☞ page 312

5.10.3 Offline auto tuning for a PM motor (motor constant tuning)

PM

The offline auto tuning enables the optimal operation of a PM motor.

- Automatic measurement of motor constants (offline auto tuning) enables optimal operation of motors for PM motor control even when motor constants vary or when the wiring distance is long. IPM and SPM motors other than the MM-EFS or MM-THE4 IPM motor can also be used.

For the offline auto tuning under Advanced magnetic flux vector control, refer to page 366.

5

Pr.	Name	Initial value	Setting range	Description
684 C000	Tuning data unit switchover	0	0	Internal data converted value
			1	The value is indicated in A, Ω, mH, or mV.
71 C100	Applied motor	0	0 to 6, 13 to 16, 20, 23, 24, 40, 43, 44, 50, 53, 54, 70, 73, 74, 210, 213, 214, 240, 243, 244, 8090, 8093, 8094, 9090, 9093, 9094	By selecting a motor, the thermal characteristic and motor constant of each motor are set.
80 C101	Motor capacity	9999	0.4 to 55 kW[*1]	Set the applied motor capacity.
			0 to 3600 kW[*2]	
			9999	V/F control
81 C102	Number of motor poles	9999	2, 4, 6, 8, 10, 12	Set the number of motor poles.
			9999	V/F control
9 C103	Electronic thermal O/L relay	Inverter rated current	0 to 500 A[*1]	Set the rated motor current.
			0 to 3600 A[*2]	
83 C104	Rated motor voltage	200/400 V[*3]	0 to 1000 V	Set the rated motor voltage (V).
84 C105	Rated motor frequency	9999	10 to 400 Hz	Set the rated motor frequency (Hz).
			9999	The MM-EFS or MM-THE4 constant is used when the IPM motor MM-EFS or MM-THE4 is selected, and the inverter internal data is used when a PM motor other than MM-EFS or MM-THE4 is selected. Use the correct setting according to the motor specification.
702 C106	Maximum motor frequency	9999	0 to 400 Hz	Set the permissible speed (frequency) of the motor.
			9999	The maximum frequency of MM-EFS/MM-THE4 is used when the IPM motor MM-EFS or MM-THE4 is selected, and the **Pr.84** setting is used when a PM motor other than the MM-EFS or MM-THE4 is selected.
707 C107	Motor inertia (integer)	9999	10 to 999, 9999	Set the motor inertia. 9999: Uses MM-EFS/MM-THE4 inertia for the IPM motor MM-EFS/MM-THE4.
724 C108	Motor inertia (exponent)	9999	0 to 7, 9999	
96 C110	Auto tuning setting/ status	0	0, 101	No offline auto tuning
			1	Offline auto tuning is performed without the motor rotating (motor other than IPM motor MM-EFS or MM-THE4).
			11	Offline auto tuning is performed without the motor rotating (V/F control, IPM motor MM-EFS/MM-THE4).

十匠科技有限公司
購買 維修 此手冊零組件
電話: 037-466332
Email: service@repairtw.com
Line Id: @zzzz
www.repairtw.com

Pr.	Name	Initial value	Setting range	Description
90 **C120**	**Motor constant (R1)**	9999	0 to 50 Ω, 9999[*1*4]	Tuning data (The value measured by offline auto tuning is automatically set.) 9999: The MM-EFS/MM-THE4 constant is used when the IPM motor MM-EFS/MM-THE4 is selected, and the inverter internal data is used when a PM motor other than the MM-EFS or MM-THE4 is selected.
			0 to 400 mΩ, 9999[*2*4]	
92 **C122**	**Motor constant (L1)/d-axis inductance (Ld)**	9999	0 to 500 mH, 9999[*1*4]	
			0 to 50 mH, 9999[*2*4]	
93 **C123**	**Motor constant (L2)/q-axis inductance (Lq)**	9999	0 to 500 mH, 9999[*1*4]	
			0 to 50 mH, 9999[*2*4]	
859 **C126**	**Torque current/Rated PM motor current**	9999	0 to 500 A, 9999[*1*4]	
			0 to 3600 A, 9999[*2*4]	
706 **C130**	**Induced voltage constant (phi f)**	9999	0 to 5000 mV (rad/s)[*4]	Set this parameter according to the PM motor specifications.
			9999	The value calculated from the parameter setting for motor constant is used.
1412 **C135**	**Motor induced voltage constant (phi f) exponent**	9999	0 to 2	Set the exponent n when the induced voltage constant phi f (**Pr.706**) is multiplied by 10^n.
			9999	No exponent setting
711 **C131**	**Motor Ld decay ratio**	9999	0 to 100%, 9999	Tuning data (The value measured by offline auto tuning is automatically set.) 9999: The MM-EFS/MM-THE4 constant is used when the IPM motor MM-EFS/MM-THE4 is selected, and the inverter internal data is used when a PM motor other than the MM-EFS or MM-THE4 is selected.
712 **C132**	**Motor Lq decay ratio**	9999	0 to 100%, 9999	
717 **C182**	**Starting resistance tuning compensation**	9999	0 to 200%, 9999	
721 **C185**	**Starting magnetic pole position detection pulse width**	9999	0 to 6000 μs, 10000 to 16000 μs, 9999	
725 **C133**	**Motor protection current level**	9999	100 to 500%	Set the maximum current (OCT) level of the motor.
			9999	The MM-EFS/MM-THE4 constant is used when the IPM motor MM-EFS or MM-THE4 is selected, and 200% is used when a PM motor other than the MM-EFS or MM-THE4 is selected.
1002 **C150**	**Lq tuning target current adjustment coefficient**	9999	50 to 150%	Adjust the target current during tuning.
			9999	100%
450 **C200**	**Second applied motor**	9999	0, 1, 3 to 6, 13 to 16, 20, 23, 24, 40, 43, 44, 50, 53, 54, 70, 73, 74, 210, 213, 214, 240, 243, 244, 8090, 8093, 8094, 9090, 9093, 9094	Set this parameter when using the second motor (the same specifications as **Pr.71**).
			9999	The function is disabled.
453 **C201**	**Second motor capacity**	9999	0.4 to 55 kW[*1]	Set the capacity of the second motor.
			0 to 3600 kW[*2]	
			9999	V/F control
454 **C202**	**Number of second motor poles**	9999	2, 4, 6, 8, 10, 12	Set the number of poles of the second motor.
			9999	V/F control
51 **C203**	**Second electronic thermal O/L relay**	9999	0 to 500 A[*1]	Set the rated current of the second motor.
			0 to 3600 A[*2]	
			9999	The second electronic thermal O/L relay is disabled.
456 **C204**	**Rated second motor voltage**	200/400 V[*3]	0 to 1000 V	Set the rated voltage (V) of the second motor.
457 **C205**	**Rated second motor frequency**	9999	10 to 400 Hz	Set the rated frequency (Hz) of the second motor.
			9999	For the second motor, the MM-EFS/MM-THE4 constant is used when the IPM motor MM-EFS/MM-THE4 is selected, and the inverter internal data is used when a PM motor other than MM-EFS or MM-THE4 is selected. Use the correct setting according to the motor specification.
743 **C206**	**Second motor maximum frequency**	9999	0 to 400 Hz	Set the permissible speed (frequency) of the second motor.
			9999	The maximum frequency of MM-EFS/MM-THE4 is used when the IPM motor MM-EFS or MM-THE4 is selected, and the **Pr.457** setting is used when a PM motor other than the MM-EFS or MM-THE4 is selected.

正達科技有限公司
購買、維修 此手冊資訊
電話： 037-466333
Email: service@repairtw.com
Line id: @97777
www.repairtw.com

Pr.	Name	Initial value	Setting range	Description
744 C207	Second motor inertia (integer)	9999	10 to 999, 9999	Set the inertia of the second motor. 9999: The MM-EFS/MM-THE4 inertia is used for the IPM motor MM-EFS/MM-THE4.
745 C208	Second motor inertia (exponent)	9999	0 to 7, 9999	
463 C210	Second motor auto tuning setting/status	0	0, 101	No auto tuning for the second motor.
			1	Offline auto tuning is performed without the motor rotating (motor other than IPM motor MM-EFS or MM-THE4).
			11	Offline auto tuning is performed without the motor rotating (V/F control, IPM motor MM-EFS/MM-THE4).
458 C220	Second motor constant (R1)	9999	0 to 50 Ω, 9999*1*4	Tuning data of the second motor (The value measured by offline auto tuning is automatically set.) 9999: The MM-EFS/MM-THE4 constant is used when the IPM motor MM-EFS/MM-THE4 is selected, and the inverter internal data is used when a PM motor other than the MM-EFS or MM-THE4 is selected.
			0 to 400 mΩ, 9999*2*4	
460 C222	Second motor constant (L1) / d-axis inductance (Ld)	9999	0 to 500 mH, 9999*1*4	
			0 to 50 mH, 9999*2*4	
461 C223	Second motor constant (L2) / q-axis inductance (Lq)	9999	0 to 500 mH, 9999*1*4	
			0 to 50 mH, 9999*2*4	
860 C226	Second motor torque current/Rated PM motor current	9999	0 to 500 A, 9999*1*4	
			0 to 3600 A, 9999*2*4	
738 C230	Second motor induced voltage constant (phi f)	9999	0 to 5000 mV (rad/s)*4	Set this parameter according to the PM motor specifications.
			9999	Value calculated based on the tuning data.
1413 C235	Second motor induced voltage constant (phi f) exponent	9999	0 to 2	Set the exponent n when the induced voltage constant phi f (**Pr.738**) is multiplied by 10^n.
			9999	No exponent setting
739 C231	Second motor Ld decay ratio	9999	0 to 100%, 9999	Tuning data of the second motor (The value measured by offline auto tuning is automatically set.) 9999: The MM-EFS/MM-THE4 constant is used when the IPM motor MM-EFS/MM-THE4 is selected, and the inverter internal data is used when a PM motor other than the MM-EFS or MM-THE4 is selected.
740 C232	Second motor Lq decay ratio	9999	0 to 100%, 9999	
741 C282	Second starting resistance tuning compensation	9999	0 to 200%, 9999	
742 C285	Second motor magnetic pole detection pulse width	9999	0 to 6000 μs, 10000 to 16000 μs, 9999	
746 C233	Second motor protection current level	9999	100 to 500%	Set the maximum current (OCT) level of the second motor.
			9999	The MM-EFS/MM-THE4 constant is used when the IPM motor MM-EFS or MM-THE4 is selected, and 200% is used when a PM motor other than the MM-EFS or MM-THE4 is selected.

上正科技有限公司
購買、維修 此手冊零組件
電話： 037-466333
Email: service@repairtw.com
Line id: @zzz
www.repairtw.com

*1 For the FR-F820-02330(55K) or lower and FR-F840-01160(55K) or lower.
*2 For the FR-F820-03160(75K) or higher and FR-F840-01800(75K) or higher.
*3 The initial value differs according to the voltage class (200 V / 400 V).
*4 The setting range and unit change according to the **Pr.71 (Pr.450)** setting.

Point

- The settings are valid under PM motor control.
- The offline auto tuning enables the operation with SPM motors and IPM motors other than the MM-EFS or MM-THE4. (When a PM motor other than the IPM motor MM-EFS or MM-THE4 is used, always perform offline auto tuning.)
- Tuning is enabled even when a load is connected to the motor.
- Reading/writing of the motor constants tuned by offline auto tuning are enabled. The offline auto tuning data (motor constants) can be copied to another inverter using the operation panel.
- The offline auto tuning status can be monitored on the operation panel or the parameter unit.

◆ Before performing offline auto tuning

Check the following points before performing offline auto tuning:

- The PM motor control is selected.
- A motor is connected. (Check that the motor is not rotated by an external force during tuning.)

- For the motor capacity, the rated motor current should be equal to or less than the rated inverter current. (The motor capacity must be 0.4 kW or higher.)
  If a motor with substantially low rated current compared with the inverter rated current, however, is used, speed and torque accuracies may deteriorate due to torque ripples, etc. Set the rated motor current to about 40% or higher of the inverter rated current.
- The maximum frequency under PM motor control is 400 Hz.
- The motor may rotate slightly even if offline auto tuning is performed without the motor rotating (**Pr.96 Auto tuning setting/status** = "1 or 11"). (It does not affect the tuning performance.)
  Fix the motor securely with a mechanical brake, or before tuning, make sure that it is safe even if the motor rotates. (Caution is required especially in vertical lift applications.)
- Tuning may be disabled depending on the motor characteristics.

◆ Settings

- To perform tuning, set the following parameters about the motor.

First motor Pr.	Second motor Pr.	Name	Setting for a PM motor other than MM-EFS or MM-THE4	Setting for MM-EFS or MM-THE4
80	453	Motor capacity	Motor capacity (kW)	Set by IPM parameter initialization (Refer to page page 175.)
81	454	Number of motor poles	Number of motor poles (2 to 12)	
9	51	Electronic thermal O/L relay	Rated motor current (A)	
84	457	Rated motor frequency	Rated motor frequency (Hz)	
83	456	Rated motor voltage	Rated motor voltage (V)	Rated motor voltage (V) written on the rating plate.
71	450	Applied motor	8090, 8093 (IPM motor) 9090, 9093 (SPM motor)*1	210, 213*1*2 240, 243*1*3
96	463	Auto tuning setting/status	1	11

*1 Set **Pr.71 Applied motor** according to the motor to be used. According to the **Pr.71** setting, the range of the motor constant parameter setting values and units can be changed. (For other setting values of **Pr.71**, refer to page 362.)
*2 Setting value for the MM-EFS (1500 r/min specification) or the MM-THE4.
*3 Setting value for the MM-EFS (3000 r/min specification).

上正科技有限公司
電話：037-466333
Email: service@repairtw.com
Line id: @zzzz
www.repairtw.com

Motor		Pr.71 setting	
		Motor constant parameter Ω, mH, and A unit setting	Motor constant parameter internal data setting
IPM motor	MM-EFS (1500 r/min specification) / MM-THE4	210	213 (214)
	MM-EFS (3000 r/min specification)	240	243 (244)
	Other than MM-EFS/MM-THE4	8090	8093 (8094)
SPM motor		9090	9093 (9094)

NOTE

- Under PM motor control, tuning cannot be performed even when **Pr.96** = "101". When the MM-EFS or MM-THE4 is set to the applied motor, tuning cannot be performed even when **Pr.96** = "1 or 101".

- For tuning accuracy improvement, set the following parameters when the motor constants are known in advance.

First motor Pr.	Second motor Pr.	Name	Setting for a PM motor other than MM-EFS/MM-THE4	Setting for MM-EFS/MM-THE4
702	743	Maximum motor frequency	Maximum motor frequency (Hz)	9999 (initial value)
707	744	Motor inertia (integer)	Motor inertia*1 Jm = **Pr.707** × 10^(**-Pr.724**) (kg·m^2)	9999 (initial value)
724	745	Motor inertia (exponent)		
725	746	Motor protection current level	Maximum current level of the motor (%)	9999 (initial value)

*1 The setting is valid only when a value other than "9999" is set in both **Pr.707 (Pr.744)** and **Pr.724 (Pr.745)**.

◆ Performing tuning

Point

- Before performing tuning, check the monitor display of the operation panel or parameter unit if the inverter is in the state ready for tuning. The motor starts by turning ON the start command while tuning is unavailable.

- In the PU operation mode, press FWD / REV on the operation panel.

  For External operation, turn ON the start command (STF signal or STR signal). Tuning starts.

NOTE

- Satisfy the required inverter start conditions to start offline auto tuning. For example, stop the input of the MRS signal.
- To force tuning to end, use the MRS or RES signal or STOP RESET on the operation panel. (Turning OFF the start signal (STF signal or STR signal) also ends tuning.)
- During offline auto tuning, only the following I/O signals are valid (initial value).
  Input terminals <valid signals>: STP (STOP), OH, MRS, RT, RES, STF, STR, S1, and S2
  Output terminals: RUN, OL, IPF, FM/CA, AM, A1B1C1, and So (SO)
- When the rotation speed and the output frequency are selected for terminals FM/CA and AM, the progress status of offline auto tuning is output in 15 steps from FM/CA and AM.
- Do not perform ON/OFF switching of the Second function selection (RT) signal during offline auto tuning. Auto tuning will not be performed properly.
- A motor with 14 or more poles cannot be tuned.
- Since the Inverter running (RUN) signal turns ON when tuning is started, pay close attention especially when a sequence which releases a mechanical brake by the RUN signal has been designed.
- When executing offline auto tuning, input the operation command after switching ON the main circuit power (R/L1, S/L2, T/L3) of the inverter.
- While **Pr.79 Operation mode selection** = "7", turn ON the PU operation external interlock (X12) signal to tune in the PU operation mode.

- During tuning, the monitor is displayed on the operation panel as follows.

上正科技有限公司
購買 維修 備件 手冊零組件
電話： 037-466333
Email: service@repairtw.com
Line id: @zzzz
www.repairtw.com

Pr.96 (Pr.463) setting	1	11	1	11
	Operation panel (FR-DU08) display		LCD operation panel (FR-LU08) display	
(1) Setting	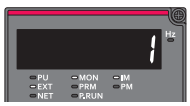	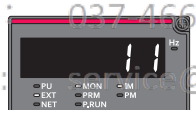	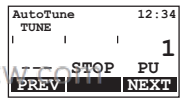	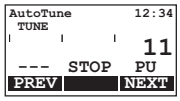
(2) During tuning	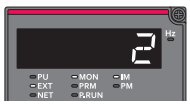		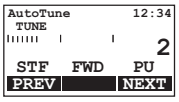	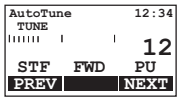
(3) Normal completion	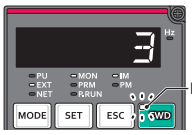 Blinking	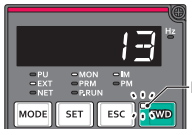 Blinking	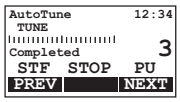	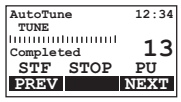

- When offline auto tuning ends, press STOP RESET on the operation panel during PU operation. For External operation, turn OFF the start signal (STF signal or STR signal). This operation resets the offline auto tuning, and the PU's monitor display returns to the normal indication. (Without this operation, next operation cannot be started.)

NOTE

- The motor constants measured once during offline auto tuning are stored as parameters and their data are held until offline auto tuning is performed again. However, the tuning data is cleared when performing All parameter clear.
- Changing **Pr.71** after tuning completion will change the motor constant. For example, if the **Pr.71** setting is changed to "8093" after tuned with **Pr.71** = "8090", the tuning data become invalid. To use the tuned data, set "8090" again in **Pr.71**.

- If offline auto tuning has ended in error (see the following table), motor constants are not set.
  Perform an inverter reset and perform tuning again.

Error display	Error cause	Countermeasures
8	Forced end	Set **Pr.96 (Pr.463)**="1 or 11" and try again.
9	Inverter protective function operation	Make the setting again.
92	The converter output voltage fell to 75% of the rated voltage.	Check for the power supply voltage fluctuation. Check the **Pr.84Rated motor frequency** setting.
93	Calculation error. The motor is not connected.	Check the motor wiring and make the setting again.
94	Rotation tuning frequency setting error. (The frequency command for the tuning was given to exceed the maximum frequency setting, or to be in the frequency jump range.)	Check the **Pr.1 Maximum frequency** and **Pr.31 to Pr.36 Frequency jump** settings.

- When tuning is ended forcibly by pressing STOP RESET or turning OFF the start signal (STF or STR) during tuning, offline auto tuning does not end properly. (The motor constants have not been set.)
  Perform an inverter reset and perform tuning again.

NOTE

- An instantaneous power failure occurring during tuning will result in a tuning error.
  After power is restored, the inverter starts normal operation. Therefore, when the STF (STR) signal is ON, the motor starts forward (reverse) rotation.
- Any fault occurring during tuning is handled as in the normal operation. However, if the retry function is set, no retry is performed even when a protective function that performs a retry is activated.
- The set frequency monitor displayed during the offline auto tuning is 0 Hz.

上正科技有限公司
購買、維修 此手冊零組件
電話： 037-466333
Email: service@repairtw.com
Line id: @222
www.repairtw.com

⚠CAUTION

- Note that the motor may start running suddenly.

◆ Parameters updated by tuning results after tuning

First motor Pr.	Second motor Pr.	Name	Other than MM-EFS/MM-THE4 Pr.96 (Pr.463) = 1	MM-EFS/MM-THE4 Pr.96 (Pr.463) = 11	Description
90	458	Motor constant (R1)	○	○	Resistance per phase
92	460	Motor constant (L1)/d-axis inductance (Ld)	○	—	d-axis inductance
93	461	Motor constant (L2)/q-axis inductance (Lq)	○	—	q-axis inductance
711	739	Motor Ld decay ratio	○	—	d-axis inductance decay ratio
712	740	Motor Lq decay ratio	○	—	q-axis inductance decay ratio
717	741	Starting resistance tuning compensation	○	○	
721	742	Starting magnetic pole position detection pulse width	○	—	When the setting value is 10000 or more: With polarity inversion for compensation, voltage pulse (Pr. setting minus 10000) μs
859	860	Torque current/Rated PM motor current	○	—	
96	463	Auto tuning setting/status	○	○	

◆ Tuning adjustment (Pr.1002)

- The overcurrent protective function may be activated during Lq tuning for an easily magnetically saturated motor (motor with a large Lq decay ratio). In such case, adjust the target flowing current used for tuning with **Pr.1002 Lq tuning target current adjustment coefficient**.

◆ Changing the motor constants

- The motor constants can be set directly when the motor constants are known in advance, or by using the data measured during offline auto tuning.

- According to the **Pr.71 (Pr.450)** setting, the range of the motor constant parameter setting values and units can be changed. The changed settings are stored in the EEPROM as the motor constant parameters.

◆ Changing the motor constants (when setting motor constants in units of Ω, mH, or A)

- Set **Pr.71** as follows.

Motor		Pr.71 setting
IPM motor	MM-EFS (1500 r/min specification) / MM-THE4	210
	MM-EFS (3000 r/min specification)	240
	Other than MM-EFS/MM-THE4	8090
SPM motor		9090

- Set desired values as the motor constant parameters.

First motor Pr.	Second motor Pr.	Name	Setting range	Setting increments	Initial value
90	458	Motor constant (R1)	0 to 50 Ω, 9999*1	0.001 Ω*1	9999
			0 to 400 mΩ, 9999*2	0.01 mΩ*2	
92	460	Motor constant (L1)/d-axis inductance (Ld)	0 to 500 mH, 9999*1	0.01 mH*1	
			0 to 50 mH, 9999*2	0.001 mH*2	
93	461	Motor constant (L2)/q-axis inductance (Lq)	0 to 500 mH, 9999*1	0.01 mH*1	
			0 to 50 mH, 9999*2	0.001 mH*2	
706	738	Induced voltage constant (phi f)	0 to 5000 mV (rad/s), 9999	0.1 mV (rad/s)	
859	860	Torque current/Rated PM motor current	0 to 500 A, 9999*1	0.01 A*1	
			0 to 3600 A, 9999*2	0.1 A*2	
1412	1413	Motor induced voltage constant (phi f) exponent	0 to 2, 9999	1	

*1 For the FR-F820-02330(55K) or lower, and FR-F840-01160(55K) or lower.
*2 For the FR-F820-03160(75K) or higher, and FR-F840-01800(75K) or higher.

上正科技有限公司
購買、維修 此手冊零組件
電話： 037-466333
Email: service@repairtw.com
Line Id: @2222
www.repairtw.com

NOTE

- If "9999" is set, tuning data will be invalid. The MM-EFS or MM-THE4 constant is used for the IPM motor MM-EFS or MM-THE4, and the inverter internal constant is used for a PM motor other than MM-EFS or MM-THE4.
- To change a motor induced voltage constant of PM motors, the setting in **Pr.706 Induced voltage constant (phi f) or Pr.738 Second motor induced voltage constant (phi f)** must be changed. If the constant after the change exceeds the setting range of **Pr.706 or Pr.738** (0 to 5000 mV (rad/s)), set **Pr.1412 Motor induced voltage constant (phi f) exponent** or **Pr.1413 Second motor induced voltage constant (phi f) exponent**. Set a value in the exponent n in the formula, **Pr.706 (Pr.738)** × 10^n [mV (rad/s)], to set the induced voltage constant (phi f).
- When **Pr.71 (Pr.450)** = "8093, 8094, 9093, or 9094", or **Pr.1412 (Pr.1413)** = "9999", the motor induced voltage constant is as set in **Pr.706 (Pr.738)**. (No exponent setting)

◆ Changing the motor constants (when setting a motor constants in the internal data of the inverter)

- Set **Pr.71** as follows.

Motor		Pr.71 setting
IPM motor	MM-EFS (1500 r/min specification) / MM-THE4	213 (214)
	MM-EFS (3000 r/min specification)	243 (244)
	Other than MM-EFS/MM-THE4	8093 (8094)
SPM motor		9093 (9094)

- Set desired values as the motor constant parameters. The displayed increments of the read motor constants can be changed with **Pr.684 Tuning data unit switchover**. Setting **Pr.684** = "1" disables parameter setting changes.

First motor Pr.	Second motor Pr.	Name	Pr.684 = 0 (initial value)		Pr.684 = 1		Initial value
			Setting range	Setting increments	Setting range	Setting increments	
90	458	Motor constant (R1)	0 to ***, 9999	1	0 to 50 Ω, 9999*1	0.001 Ω*1	9999
					0 to 400 mΩ, 9999*2	0.01 mΩ*2	
92	460	Motor constant (L1)/d-axis inductance (Ld)			0 to 500 mH, 9999*1	0.01 mH*1	
					0 to 50 mH, 9999*2	0.001 mH*2	
93	461	Motor constant (L2)/q-axis inductance (Lq)			0 to 500 mH, 9999*1	0.01 mH*1	
					0 to 50 mH, 9999*2	0.001 mH*2	
706	738	Induced voltage constant (phi f)			0 to 5000 mV (rad/s), 9999	0.1 mV (rad/s)	
859	860	Torque current/Rated PM motor current			0 to 500 A, 9999*1	0.01 A*1	
					0 to 3600 A, 9999*2	0.1 A*2	
1412	1413	Motor induced voltage constant (phi f) exponent			0 to 2, 9999	1	

*1 For the FR-F820-02330(55K) or lower, and FR-F840-01160(55K) or lower.
*2 For the FR-F820-03160(75K) or higher, and FR-F840-01800(75K) or higher.

NOTE

- As the motor constants measured in the offline auto tuning have been converted into internal data (****), refer to the following setting example when making setting. (The value displayed has been converted into a value for internal use. Therefore, simple addition of a value to the displayed value does not bring the desired effect.)
  Setting example: to slightly increase the **Pr.90** value (5%)
  When "2516" is displayed for **Pr.90**, set 2642 (2516 × 1.05 = 2641.8) in **Pr.90**.
- If "9999" is set, tuning data will be invalid. The MM-EFS or MM-THE4 constant is used for the IPM motor MM-EFS or MM-THE4, and the inverter internal constant is used for a PM motor other than MM-EFS or MM-THE4.
- To change a motor induced voltage constant of PM motors, the setting in **Pr.706 Induced voltage constant (phi f)** or **Pr.738 Second motor induced voltage constant (phi f)** must be changed. If the constant after the change exceeds the setting range of Pr.706 or Pr.738 (0 to 5000 mV (rad/s)), set **Pr.1412 Motor induced voltage constant (phi f) exponent** or **Pr.1413 Second motor induced voltage constant (phi f) exponent**. Set a value in the exponent n in the formula, **Pr.706 (Pr.738)** × 10^n [mV (rad/s)], to set the induced voltage constant (phi f).
- When **Pr.71 (Pr.450)** = "8093, 8094, 9093, or 9094", or **Pr.1412 (Pr.1413)** = "9999", the motor induced voltage constant is as set in **Pr.706 (Pr.738)**. (No exponent setting)

上正科技有限公司
專業：維修 IC 手機零組件
電話： 037-466333
Email: service@repairtw.com
Line id: @zzzz
www.repairtw.com

Parameters referred to

Pr.9 Electronic thermal O/L relay ☞ page 252
Pr.71 Applied motor ☞ page 362
Pr.178 to Pr.189 (Input terminal function selection) ☞ page 355

5.10.4 Online auto tuning

Magnetic flux

If online auto tuning is selected under Advanced magnetic flux vector control, favorable torque accuracy is retained by adjusting temperature even when the resistance value varies due to increase in the motor temperature.

Pr.	Name	Initial value	Setting range	Description
95 **C111**	**Online auto tuning selection**	0	0	No online auto tuning
			1	Online auto tuning is performed at startup.
574 **C211**	**Second motor online auto tuning**	0	0, 1	Select online auto tuning for the second motor. (The settings are the same as those in **Pr.95**.)

◆ Online auto tuning at startup (Pr.95/Pr.574 = "1")

- By promptly tuning the motor status at startup, accurate operation without being affected by motor temperature is achieved. Also high torque can be provided at very low speed and stable operation is possible.
- Under Advanced magnetic flux vector control (**Pr.80 Motor capacity, Pr.81 Number of motor poles**), select the online auto tuning at startup.

- Make sure to perform offline auto tuning before performing online auto tuning.

Operating procedure

1. Perform offline auto tuning. (Refer to page 366.)

2. Check that **Pr.96 Auto tuning setting/status** = "3 or 103" (offline auto tuning completion).

3. Set **Pr.95 Online auto tuning selection** = "1" (online auto tuning at start).
Online auto tuning is enabled at the next start.

4. Check that the following parameters are set before starting operation.

Pr.	Description
9	Rated motor current or electronic thermal O/L relay
71	Applied motor
80	Motor capacity (with the rated motor current equal to or less than the inverter rated current)*1
81	Number of motor poles

*1 If a motor with substantially low rated current compared with the inverter rated current is used, speed and torque accuracies may deteriorate due to torque ripples, etc. Set the rated motor current to about 40% or higher of the inverter rated current.

5. In the PU operation mode, press FWD / REV on the operation panel.
For External operation, turn ON the start command (STF signal or STR signal).

NOTE

- When performing online auto tuning at startup for a lift, consider using an external terminal. The tuning takes about 500 ms at the most after starting. However, during this time, it is possible that not enough torque is provided and caution is required to prevent the object from dropping. Use of the Start-time tuning start external input (X28) signal is recommended to perform tuning. (Refer to page 383.)
- Perform online auto tuning at startup when the motor is stopped.
- The online auto tuning is disabled when the MRS signal is being input, the setting speed is **Pr.13 Starting frequency** or lower (V/F control, Advanced magnetic flux vector control), an inverter fault is occurring, or the inverter's startup condition is not satisfied.
- Online auto tuning does not operate during deceleration and restart from DC injection brake operation.
- It is disabled during JOG operation.
- If automatic restart after instantaneous power failure is selected, automatic restart is prioritized. (Online auto tuning at startup is not performed during frequency search.)
  If automatic restart after instantaneous power failure is used together, perform online auto tuning while stopping operation with the X28 signal. (Refer to page 383.)
- Zero current detection and output current detection are enabled during online auto tuning.
- The RUN signal is not output during online auto tuning. The RUN signal is turned ON at operation startup.
- If the time between the inverter stop and restart is within 4 seconds, tuning is performed at startup but its result will not be applied.

上正科技有限公司
購買、維修、此產品零組件
電話： 037-466333
Email: service@repairtw.com
Line id: @2222
www.repairtw.com

◆ Online auto tuning at startup using the external terminal (Pr.95/Pr.574 = "1", X28 signal, Y39 signal)

- Before turning ON the start signal (STF or STR), online auto tuning can be performed by turning ON the Start-time tuning start external input (X28) signal in a stopped status in order to minimize the startup delay by tuning at start.
- Perform offline auto tuning and set "1" (tuning at start) in **Pr.95**.
- When the Start time tuning completion (Y39) signal is OFF, tuning at start can be performed with the X28 signal.
- The tuning takes about 500 ms at the most.
- To use the X28 signal, set "28" in any of **Pr.178 to Pr.189 (Input terminal function selection)** to assign the function to an input terminal.

- To use the Y39 signal, set "39 (positive logic) or 139 (negative logic)" in any of **Pr.190 to Pr.196 (Output terminal function selection)** to assign the function to an output terminal.

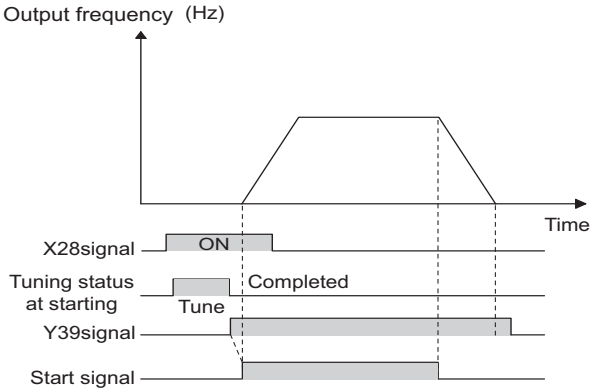

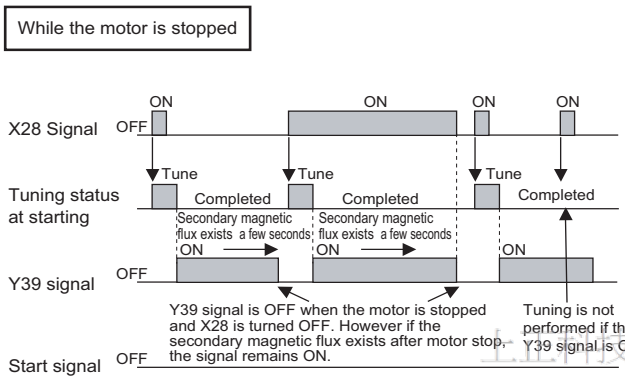

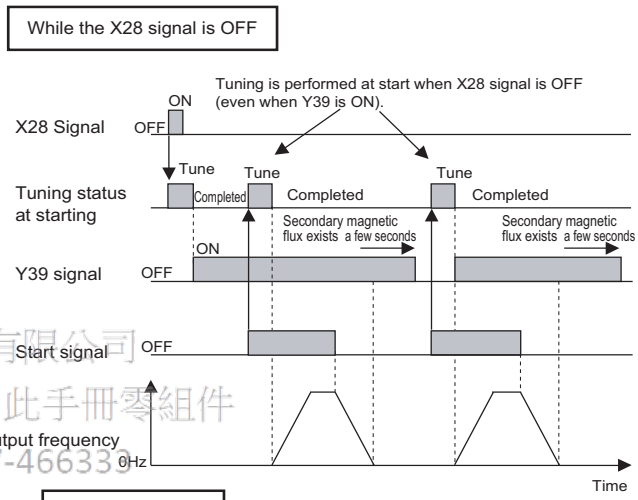

上正科技有限公司
購買、維修 此手冊零組件
電話： 037-466339
Email: service@repairtw.com
Line id: @zzzz
www.repairtw.com

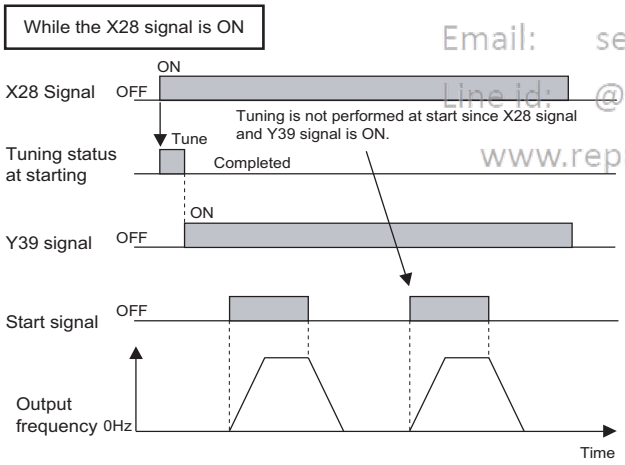

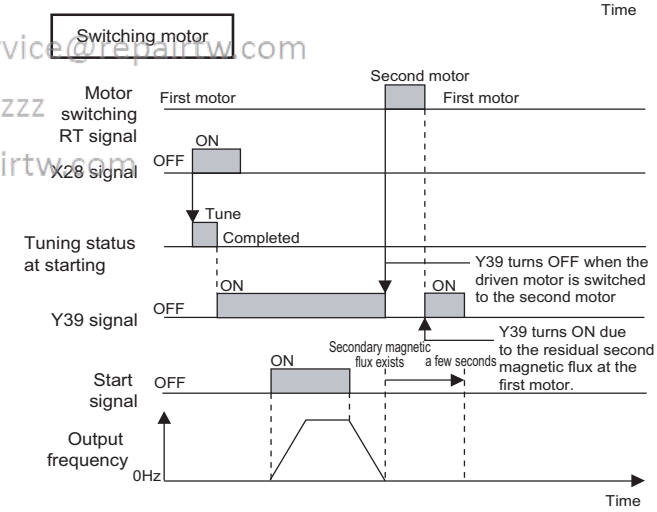

NOTE

- The Y39 signal remains ON after the motor is stopped as long as the second flux remains.
- The X28 signal is disabled while the Y39 signal is ON.
- The STF and STR signals are enabled after completing tuning at start.
- The Inverter running (RUN) signal is not turned ON during online auto tuning. The RUN signal is turned ON after starting up.
- The setting is invalid under V/F control or PM motor control.
- Changing the terminal assignment using **Pr.178 to Pr.189 (Input terminal function selection)** or **Pr.190 to Pr.196 (Output terminal function selection)** may affect the other functions. Set parameters after confirming the function of each terminal.

◆ Tuning the second motor (Pr.574)

- When one inverter switches the operation between two different motors, set the second motor in **Pr.450 Second applied motor**. (In the initial setting, no second motor is applied. (Refer to page 362.))

- Perform tuning using **Pr.574 Second motor online auto tuning** .
- **Pr.574** is enabled when the Second function selection (RT) signal is turned ON.

Pr.	Description
450	Applied motor
453	Motor capacity (with the rated motor current equal to or less than the inverter rated current)*1
454	Number of motor poles

*1 If a motor with substantially low rated current compared with the inverter rated current is used, speed and torque accuracies may deteriorate due to torque ripples, etc. Set the rated motor current to about 40% or higher of the inverter rated current.

NOTE

- The RT signal is the Second function selection signal. The RT signal also enables other second functions. (Refer to page 355.) The RT signal is assigned to terminal RT in the initial status. Set "3" in one of **Pr.178 to Pr.189 (Input terminal function selection)** to assign the RT signal to another terminal.
- Changing the terminal assignment using **Pr.178 to Pr.189 (input terminal function selection)** may affect the other functions. Set parameters after confirming the function of each terminal.

5

Parameters referred to

Pr.9 Electronic thermal O/L relay ☞ page 252
Pr.71 Applied motor ☞ page 362
Pr.80 Motor capacity ☞ page 169, page 366, page 375
Pr.81 Number of motor poles ☞ page 169, page 366, page 375
Pr.96 Auto tuning setting/status ☞ page 366, page 375
Pr.178 to Pr.189 (Input terminal function selection) ☞ page 355
Pr.190 to Pr.196 (Output terminal function selection) ☞ page 312

上正科技有限公司
購買、維修 此手冊零組件
電話： 037-466333
Email: service@repairtw.com
Line id: @zzzz
www.repairtw.com

5.11 (A) Application parameters

Purpose	Parameter to set			Refer to page
To operate by switching between the inverter and the commercial power supply operation	Electronic bypass function	P.A000 to P.A005	Pr.135 to Pr.139, Pr.159	387
To reduce the standby power	Self power management	P.A002, P.A006, P.A007, P.E300	Pr.30, Pr.137, Pr.248, Pr.254	393
To count the number of inverter starting times	Start count monitor	P.A170, P.A171	Pr.1410, Pr.1411	395
To strengthen or weaken the frequency at a constant cycle	Traverse operation	P.A300 to P.A305	Pr.592 to Pr.597	396
To remove stains on the impellers or fans of pumps by repeating a forward/ reverse rotation	Cleaning function	P.A420 to P.A430	Pr.1469 to Pr.1479	398
To perform process control, such as for the pump flow volume and air volume	Multi-pump function (Advanced PID function)	P.A400 to P.A414, P.A442	Pr.578 to Pr.591, Pr.1370, Pr.1376	430
	PID Pre-charge function	P.A616 to P.A620, P.A626, P.A656 to P.A660, P.A666	Pr.760 to Pr.769, Pr.1132, Pr.1133	425
	PID display adjustment	P.A630 to P.A633, P.A670 to P.A673	C42 to C45 (Pr.934, Pr.935), Pr.1136 to Pr.1139	423
	PID control	P.A442, P.A600 to P.A607, P.A610 to P.A615, P.A621 to P.A625, P.A640 to P.A644, P.A650 to P.A655, P.A661 to P.A665, P.A683 to P.A689	Pr.127 to Pr.134, Pr.553, Pr.554, Pr.575 to Pr.577, Pr.609, Pr.610, Pr.753 to Pr.758, Pr.1015, Pr.1134, Pr.1135, Pr.1140, Pr.1141, Pr.1143 to Pr.1149, Pr.1370, Pr.1460 to Pr.1466	401
	PID control enhanced functions	P.A440 to P.A456, P.A627 to P.A629, P.F031	Pr.111, Pr.1361 to Pr.1375, Pr.1377 to Pr.1381	439
To set the constant optimal for PID control	PID gain tuning	P.A690 to P.A698	Pr.1211 to Pr.1219	417
To continue operating at analog current input loss	4 mA input check	P.A680 to P.A682	Pr.573, Pr.777, Pr.778	350
To restart without stopping the motor at instantaneous power failure	Automatic restart after instantaneous power failure / flying start function for induction motors	P.A700 to P.A705, P.A710 to P.F003	Pr.57, Pr.58, Pr.162 to Pr.165, Pr.299, Pr.611	446
	Frequency search accuracy improvement (V/F control, offline auto tuning)	P.A700, P.A711, P.A712, P.C110, P.C210	Pr.96, Pr.162, Pr.298, Pr.463, Pr.560	454
	Automatic restart after instantaneous power failure / flying start function for IPM motors	P.A700, P.A702, P.F003, P.F004	Pr.57, Pr.162, Pr.611	451
To decelerate the motor to a stop at power failure	Power failure time deceleration-to-stop function	P.A730 to P.A735, P.A785	Pr.261 to Pr.266, Pr.294	458
To operate with sequence program	PLC function	P.A800 to P.A804, P.A811 to P.A860	Pr.414 to Pr.417, Pr.498, Pr.1150 to Pr.1199	462
To store the inverter running status to a USB memory device	Trace function	P.A900 to P.A906, P.A910 to P.A920, P.A930 to P.A939	Pr.1020 to Pr.1047	465

上正科技有限公司
購買、維修 此型號專賣
電話： 037-466888
Email: service@repairtw.com
Line id: @zzzz
www.repairtw.com

5.11.1 Electronic bypass function

V/F Magnetic flux

The inverter contains complicated sequence circuits for switching between the commercial power supply operation and inverter operation. Therefore, interlock operation of the magnetic contactor for switching can be easily performed by simply inputting start, stop, and automatic switching selection signals.

Pr.	Name	Initial value	Setting range	Description
57 A702	**Restart coasting time**	9999	0	Coasting time differs according to the inverter capacity.*1
			0.1 to 30 s	Set the waiting time for the inverter to perform a restart after restoring power due to an instantaneous power failure.
			9999	No restart
58 A703	**Restart cushion time**	1 s	0 to 60 s	Set the voltage cushion time for restart.
135 A000	**Electronic bypass sequence selection**	0	0	Without electronic bypass sequence
			1	With electronic bypass sequence
136 A001	**MC switchover interlock time**	1 s	0 to 100 s	Set the operation interlock time for MC2 and MC3.
137 A002	**Start waiting time**	0.5 s	0 to 100 s	Set a time period that is a little longer than the time period from the ON signal input to the actual pick-up operation of MC3 (0.3 to 0.5 s).
138 A003	**Bypass selection at a fault**	0	0	Inverter output stop (motor coasting) at inverter failure
			1	Automatic switchover to commercial power supply operation at inverter failure. (Switchover is not possible when an external thermal relay (E.OHT) or CPU fault (E.CPU) is occurring.)
139 A004	**Automatic switchover frequency from inverter to bypass operation**	9999	0 to 60 Hz	Set the frequency where the inverter operation is switched to commercial power supply operation. The inverter operation is performed from a start to **Pr.139** setting, then it switches automatically to the commercial power supply operation when the output frequency is equal to or above **Pr.139**.
			9999	Without automatic switchover
159 A005	**Automatic switchover frequency range from bypass to inverter operation**	9999	0 to 10 Hz	Set the frequency where the commercial power supply operation, which has been switched from the inverter operation with **Pr.139**, switches back to inverter operation. When the frequency command becomes less than (**Pr.139** - **Pr.159**), the motor switches automatically to inverter operation and operates at the frequency of the frequency command. Turning OFF a inverter start command (STF/STR) also switches the operation to the inverter operation.
			9999	To switch the commercial power supply operation, which has been switched from the inverter operation with **Pr.139**, to the inverter operation again, the inverter start command (STF/STR) is turned OFF. The operation switches to the inverter operation, and the motor decelerates to a stop.

上正科技有限公司
購買、維修 專業工業電子組件
電話： 037-456333
Email: service@repairtw.com
Line Id: @zzzz
www.repairtw.com

*1 The coasting time when **Pr.57** = "0" is as shown below. (When **Pr.162 Automatic restart after instantaneous power failure selection** is set to the initial value.)
FR-F820-00077(1.5K) or lower and FR-F840-00038(1.5K) or lower: 0.5 s
FR-F820-00105(2.2K) to FR-F820-00340(7.5K), FR-F840-00052(2.2K) to FR-F840-00170(7.5K): 1 s
FR-F820-00490(11K) to FR-F820-02330(55K), FR-F840-00250(11K) to FR-F840-01160(55K): 3.0 s
FR-F820-03160(75K) or higher, FR-F840-01800(75K) or higher: 5.0 s

◆ Electronic bypass sequence function

- When operating the motor at 60 Hz (or 50 Hz), the motor can be more efficiently operated with a commercial power supply. In addition, if the motor cannot be stopped for a long period of time even for an inverter maintenance and inspection, it is recommended that a commercial power supply circuit be installed.
- When switching between inverter operation and commercial power supply operation, commercial power supply may be accidentally applied to the output side of the inverter. To avoid such situation, provide an interlock where the magnetic contactor at the commercial power supply side turns ON at turn OFF of the magnetic contactor at the inverter output side. The inverter's electronic bypass sequence that outputs timing signals for the magnetic contactors can act as a complicated interlock between the commercial power supply operation and the inverter operation.

◆ Connection diagram

- A typical connection diagram of the electronic bypass sequence is shown below.

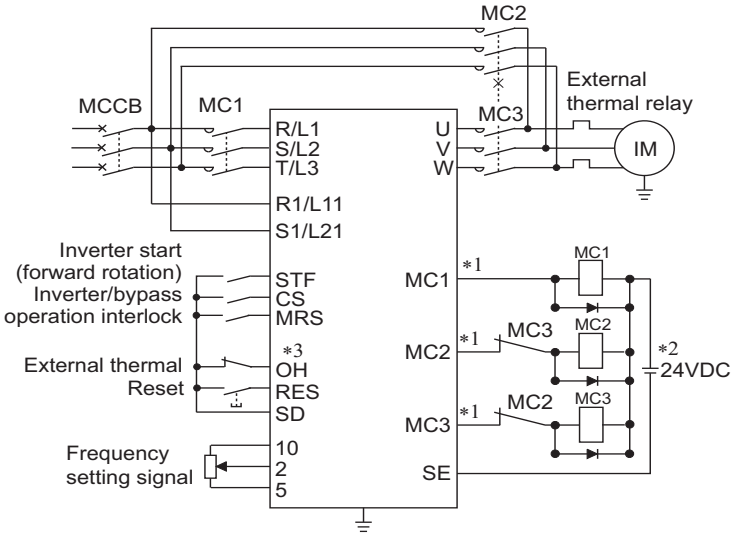

Standard models and IP55 compatible models

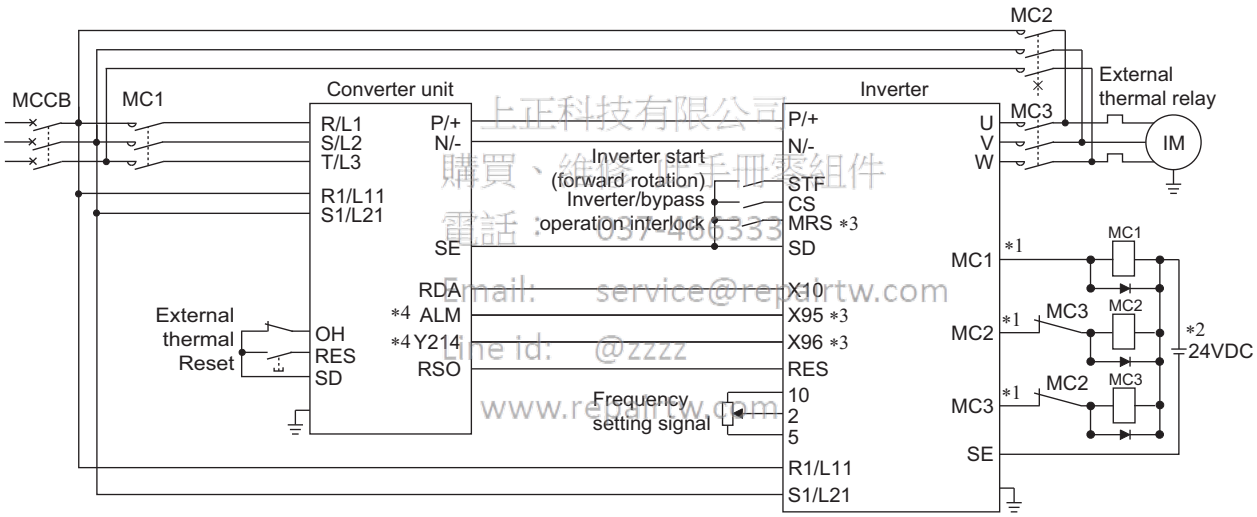

上正科技有限公司
購買、維修、備手冊零組件
電話：037-466333
Email: service@repairtw.com
Line id: @zzzz
www.repairtw.com

Separated converter type

*1 Be careful of the capacity of the sequence output terminals.
The applied terminals differ by the settings of **Pr.190 to Pr.196 (Output terminal function selection)**.

Output terminal capacity	Output terminal permissible load
Open collector output of inverter (RUN, SU, IPF, OL, FU)	24 VDC 0.1 A
Inverter relay output (A1-C1, B1-C1, A2-B2, B2-C2) Relay output option (FR-A8AR)	230 VAC 0.3 A 30 VDC 0.3 A

*2 When connecting a DC power supply, insert a protective diode.
When connecting an AC power supply, use the relay output option (FR-A8AR), and use contact outputs.

*3 The applied terminals differ by the settings of **Pr.180 to Pr.189 (Input terminal function selection)**

*4 To use the signal, assign the function to the output terminal **Pr.190 to Pr.195 (Output terminal function selection)** of the converter unit. Always set the negative logic for the ALM signal.

NOTE

- Use the Electronic bypass function in External operation mode. In addition, the wiring terminals R1/L11 and S1/L21 must be connected to a separate power source that does not go through MC1. Be sure to connect using a separate power supply.
- Be sure to provide a mechanical interlock for MC2 and MC3.

- Operation of magnetic contactor (MC1, MC2, MC3)

Magnetic contactor	Installation location	Operation status		
		During commercial power supply operation	During inverter operation	During inverter fault
MC1	Between power supply and inverter input side	Shorted	Shorted	Open (short by reset)
MC2	Between power supply and motor	Shorted	Open	Open (Selected by **Pr.138**. Always open when the external thermal relay is operating.)
MC3	Between inverter output side and motor	Open	Shorted	Open

- The input signals are as shown below.

Signal	Applied terminal	Function	Operation status	MC operation[*8]		
				MC1[*6]	MC2	MC3
MRS	MRS[*1]	Selects whether or not operation is available.[*2]	ON Electronic bypass operation available	○	—	—
			OFF Electronic bypass operation not available	○	×	No change
CS	CS	Inverter/commercial power supply operation switchover[*3]	ON Inverter operation	○	×	○
			OFF Commercial power supply operation	○	○	×
STF (STR)	STF (STR)	Inverter operation command (Disabled during commercial power supply operation)[*4]	ON Forward rotation (reverse rotation)	○	×	○
			OFF Stop	○	×	○
OH	Set "7" in any of **Pr.180 to Pr.189**.	External thermal relay input	ON Motor normal	○	—	—
			OFF Motor fault	×	×	×
RES	RES	Operation status reset[*5]	ON Reset	No change	×	No change
			OFF Normal operation	○	—	—
X95/X96	Set "95 or 96" in any of **Pr.180 to Pr.189**.	Converter unit fault / Converter unit fault (E.OHT, E.CPU)	X95 signal OFF, X96 signal OFF Converter fault (E.OHT, E.CPU)	×	×	×
			X95 signal ON, X96 signal ON Converter normal	○	—	—
			X95 signal OFF, X96 signal ON Converter fault (other than E.OHT or E.CPU)	×	—[*7]	×

上正科技有限公司
購買、維修此產品零組件
電話： 03-316-2-23
Email: service@repair.tw.com
Line id: @2222
www.repair.tw.com

*1 For separated converter types, the X10 signal is assigned to the terminal MRS in the initial setting. For the MRS signal, set "24" to any of **Pr.180 to Pr.189 (Input terminal function selection)** to assign the function to another terminal.
*2 When the MRS signal is OFF, neither the commercial power supply operation nor the inverter operation can be performed.
*3 Terminal CS is initially set to "no function". To enable the CS signal, set "6" in **Pr.186 CS terminal function selection** to assign the function to a terminal. The CS signal operates only when the MRS signal is ON.
*4 STF (STR) operates only when the MRS and CS signals are both ON.
*5 The RES signal can be used for reset input acceptance with **Pr.75 Reset selection/disconnected PU detection/PU stop selection**. When the RES signal and another input signal are simultaneously input, the MC operation by the RES signal has a higher priority.
*6 MC1 turns OFF at an inverter fault.
*7 When **Pr.138** = "0 (electronic bypass invalid at a fault)", MC2 is OFF. When **Pr.138** = "1 (electronic bypass valid at a fault)", MC2 is ON.
*8 MC operation is as shown below.

Notation	MC operation
○	ON
×	OFF
—	During inverter operation: MC2-OFF, MC3-ON During commercial power supply operation: MC2-ON, MC3-OFF
No change	The operation status before changing the signal state to ON or OFF is held.

- The output signals are as shown below.

Signal	Applied terminal (Pr.190 to Pr.196 setting)	Description
MC1	17	Operation output signal of the magnetic contactor MC1 on the inverter's input side.
MC2	18	Operation output signal of the magnetic contactor MC2 for the commercial power supply operation.
MC3	19	Operation output signal of the magnetic contactor MC3 on the inverter's output side.

◆ Electronic bypass operation sequence

- Example of operation sequence without automatic bypass sequence (**Pr.139** = "9999")

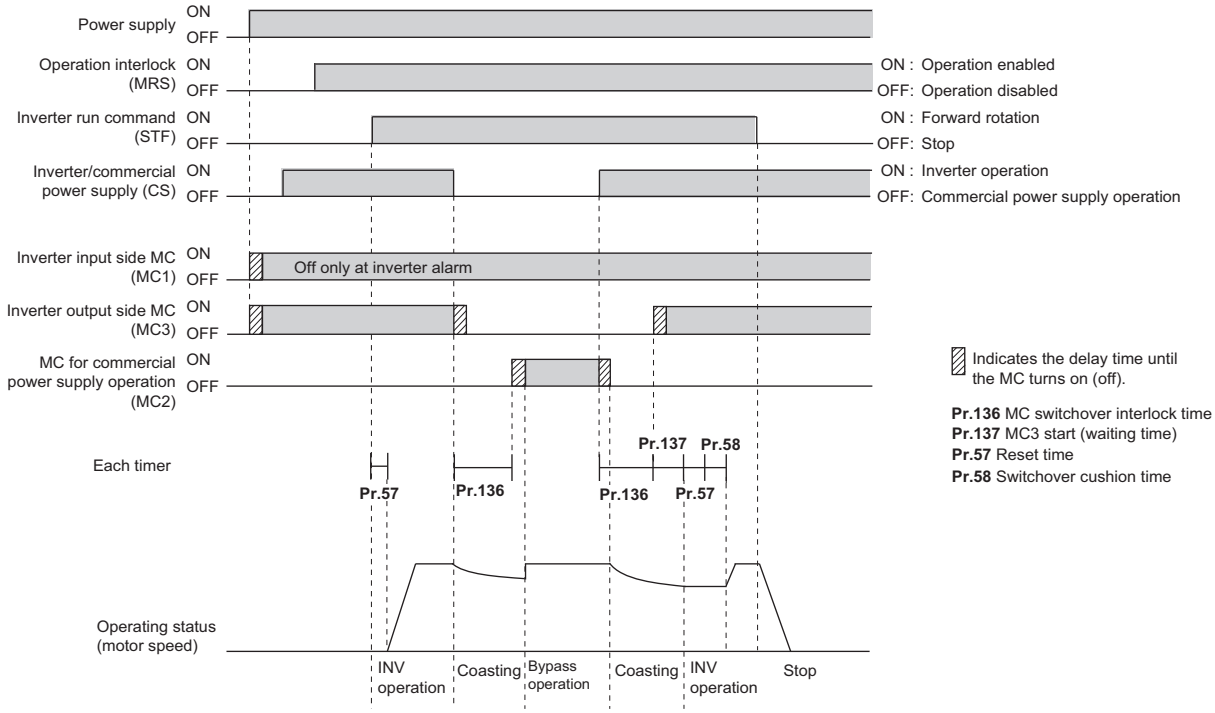

- Example of operation sequence with automatic bypass sequence (**Pr.139** ≠ "9999", **Pr.159** = "9999")

上正科技有限公司
購買、維修 此手冊零組件
電話： 037-466333
Email: service@repairtw.com
Line id: @zzzz
www.repairtw.com

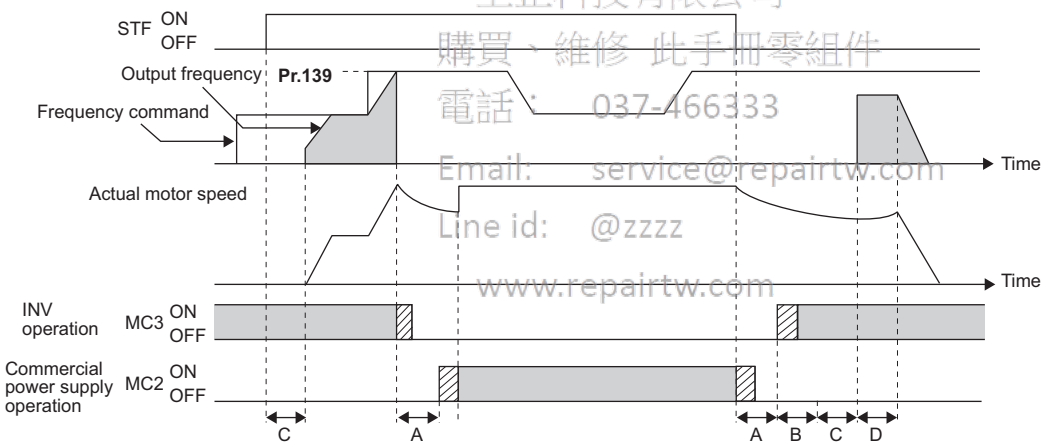

A : **Pr.136 MC switchover interlock time** B : **Pr.137 Start waiting time**
C : **Pr.57 Restart coasting time** D : **Pr.58 Restart cushion time**

- Example of operation sequence with automatic bypass sequence (**Pr.139** ≠ "9999", **Pr.159** ≠ "9999")

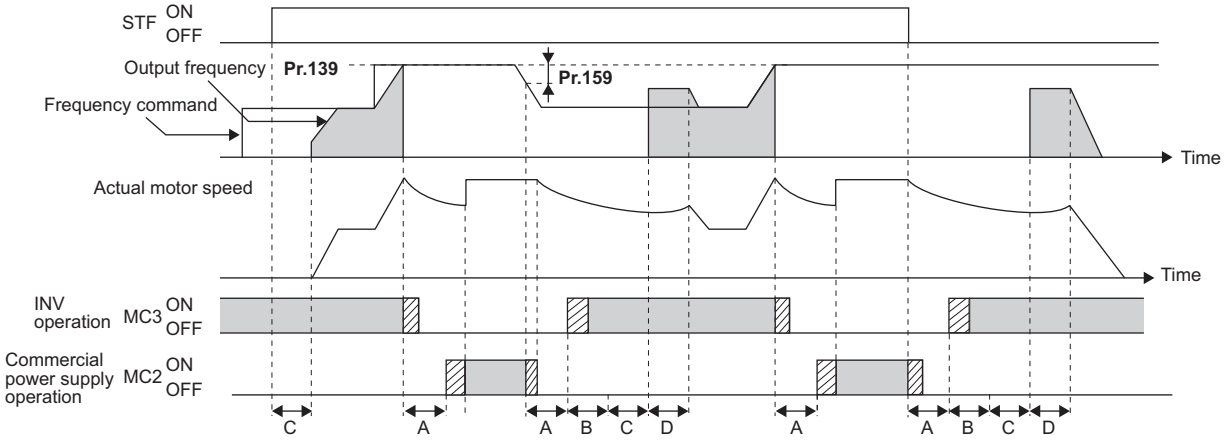

A : **Pr.136 MC switchover interlock time** B : **Pr.137 Start waiting time**
C : **Pr.57 Restart coasting time** D : **Pr.58 Restart cushion time**

Operating procedure

- Operation flowchart

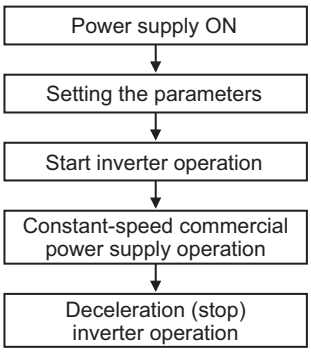

- **Pr.135** = "1" (open collector output terminal of inverter)
- **Pr.136** = 2.0 s
- **Pr.137** = 1.0 s (Set the time until MC3 is actually turned ON and the inverter and motor are electrically connected. If the time is short, the restart may not function properly.)
- **Pr.57** = 0.5 s
- **Pr.58** = 0.5 s (Always set this to switchover from the commercial power supply operation to the inverter operation.)

5

- Signal operation after setting parameters

Status	MRS	CS	STF	MC1	MC2	MC3	Remarks
Power ON	OFF (OFF)	OFF (OFF)	OFF (OFF)	OFF → ON (OFF → ON)	OFF (OFF)	OFF→ON (OFF→ON)	External operation mode (PU operation mode)
At start (Inverter)	OFF→ON	OFF→ON	OFF→ON	ON	OFF	ON	
During constant-speed operation (commercial power supply)	ON	ON→OFF	ON	ON	OFF→ON	ON→OFF	MC2 turns ON after MC3 turns OFF. Delay time is 2 s (while coasting).
For deceleration, switched to the inverter operation (inverter)	ON	OFF→ON	ON	ON	ON→OFF	OFF→ON	MC3 turns ON after MC2 turns OFF. Delay time is 4 s (while coasting).
Stop	ON	ON	ON→OFF	ON	OFF	ON	

上正科技有限公司
購買、維修 此手冊零組件
電話： 037-466333
Email: service@repairtw.com
Line id: @zzzz
www.repairtw.com

NOTE

- Connect the control power (R1/L11, S1/L21) in front of the input-side MC1. If the control power is connected behind the input-side MC1, the electronic bypass sequence function will not operate.
- The electronic bypass sequence function is only enabled when **Pr.135** = "1" and in the External operation mode or combined operation mode (PU speed command and External operation command with **Pr.79** = "3"). MC1 and MC3 turn ON when **Pr.135** = "1" and in an operation mode other than mentioned above.
- MC3 turns ON when the MRS and CS signals are ON and the STF (STR) signals OFF. If the motor was coasted to a stop from commercial power supply operation at the previous stop, the motor starts running only after waiting the time set in **Pr.137**.
- Inverter operation is only available when the MRS, STF (STR), and CS signals are ON. In all other cases (when the MRS signal is ON), commercial power supply operation is available.
- When the CS signal is OFF, the motor switches to the commercial power supply operation. However, when the STF (STR) signal is OFF, the motor decelerates to a stop during inverter operation.
- From the point where MC2 and MC3 are both turned OFF, there is a delay time set with **Pr.136**, till MC2 or MC3 is turned ON.
- Even when the electronic bypass sequence is enabled (**Pr.135** = "1"), the **Pr.136** and **Pr.137** settings are ignored in PU operation mode.
  In addition, the input terminals (STF, CS, MRS, OH) return to perform their normal functions.
- When the electronic bypass sequence function (**Pr.135** = "1") and PU operation interlock function (**Pr.79** = "7") are used at the same time, the MRS signal is shared with the PU operation external interlock if the X12 signal is not assigned. (The inverter operation is available when the MRS and CS signals are ON.)
- Set the acceleration time to the level that does not activate the stall prevention operation.
- If switching to the commercial power supply operation while a failure such as an output short circuit has occurred between the magnetic contactor MC3 and the motor, the damage may further spread. If a failure has occurred between the MC3 and the motor, a protection circuit such as using the OH signal input must be provided.
- Changing the terminal functions with **Pr.178 to Pr.189** and **Pr.190 to Pr.196** may affect other functions. Set parameters after confirming the function of each terminal.
- Switching with the electronic bypass sequence is not available during retry. Switching occurs after the retry. When the electronic bypass is valid at a fault (**Pr.138** = "1"), switching occurs also during retry.
- When the electronic bypass sequence function and the retry function of the converter unit are used at the same time for the separated converter type, set 101 or more in the number of retries at fault occurrence (**Pr.67**) on the converter unit side. When a value less than 100 is set, the ALM signal does not turn ON until the retry count is exceeded. In this case, the electronic bypass at a fault is not performed until the retry count is exceeded.

日本科技有限公司
購買、維修 此手冊零組件
電話： 886-2-2221-6320
Email: service@repairtw.com
Line ID: @222
www.repairtw.com

◆ Operation in combination with the self power management function for the separated converter type

- When the self power management function is used with the separated converter type, the input signal operations are as follows.

X95 (Converter unit fault)	X96 (Converter unit fault (E.OHT, E.CPU))	X94 (Control signal for main circuit power supply MC)	MC operation*3			Converter status
			MC1	MC2	MC3	
OFF	OFF	ON	○*2	×	×	Converter fault (E.OHT (**Pr.248** = "2"))
		OFF	×	×	×	Converter fault (E.OHT (**Pr.248** = "1"), E.CPU)
ON	ON	ON	○*2	—	—	Converter normal
OFF	ON	ON	○*2	—*1	×	Converter fault (other than the circuit failure fault or E.OHT) (**Pr.248** = "2")
		OFF	×	—*1	×	Converter fault (other than E.OHT or E.CPU)

*1 When **Pr.138** = "0 (electronic bypass invalid at a fault)", MC2 is OFF. When **Pr.138** = "1 (electronic bypass valid at a fault)", MC2 is ON.
*2 The self power management operation is followed.
*3 MC operation is as shown below.

Notation	MC operation
○	ON
×	OFF
—	During inverter operation: MC2-OFF, MC3-ON During commercial power supply operation: MC2-ON, MC3-OFF

Parameters referred to

Pr.11 DC injection brake operation time ☞ page 535
Pr.57 Restart coasting time ☞ page 446, page 451
Pr.58 Restart cushion time ☞ page 446
Pr.79 Operation mode selection ☞ page 228
Pr.178 to Pr.189 (Input terminal function selection) ☞ page 355
Pr.190 to Pr.196 (Output terminal function selection) ☞ page 312

5.11.2 Self power management

By turning ON the magnetic contactor (MC) on the input side before the motor is started and turning OFF the MC after the motor is stopped, power is not supplied to the main circuit, reducing the standby power.

Pr.	Name	Initial value	Setting range	Description
248 **A006**	**Self power management selection**	0	0	Self power management function disabled
			1	Self power management function enabled (main circuit OFF at protective function activation)
			2	Self power management function enabled (main circuit OFF at protective function activation due to a circuit failure)
137 **A002**	**Start waiting time**	0.5 s	0 to 100 s	Set a time period that is a little longer than the time period from the ON signal input to the actual pick-up operation of MC1 (0.3 to 0.5 s).
254 **A007**	**Main circuit power OFF waiting time**	600 s	1 to 3600 s	Set the waiting time until the main circuit power supply is turned OFF after the motor is stopped.
			9999	The main circuit power supply is turned OFF only when the protective function selected by **Pr.248** is activated.
30 **E300**	**Regenerative function selection**	0	100, 101	Power supply to the inverter: AC (terminals R, S, and T) When power is supplied only to the control circuit, and then switched to be supplied to both the control and main circuits, inverter reset is not performed.
			0 to 2, 10, 11, 20, 21, 102, 110, 111, 120, 121	For other settings, refer to page 539.

上正科技有限公司
購買 維修 此手冊零組件
電話：037-466333
Email: service@repairtw.com
Line id: @zzzz
www.repairtw.com

◆ Connection diagram

- Terminal R1, S1 inputs

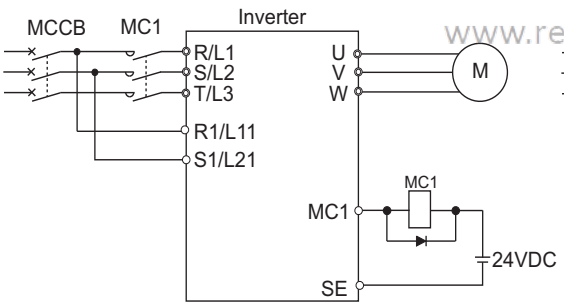

Standard models

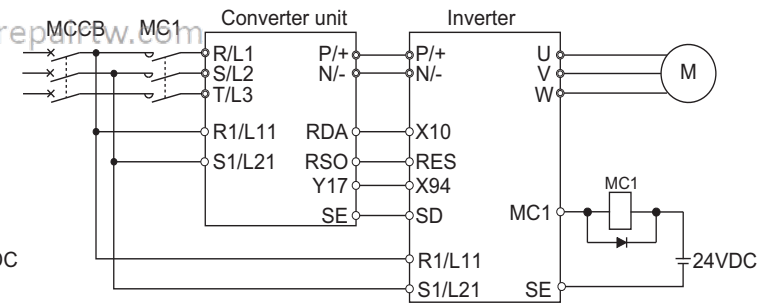

Separated converter type

- 24 V external power supply input

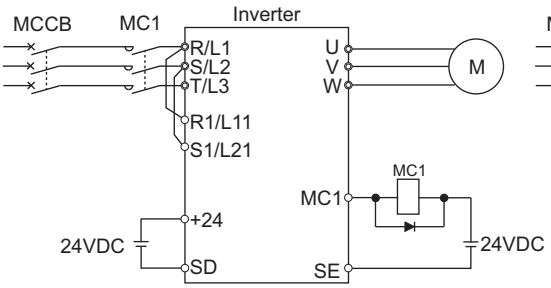

Standard models and IP55 compatible models

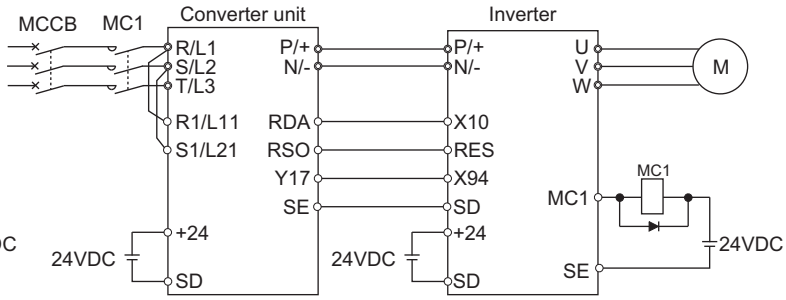

Separated converter type

◆ Operation of the self power management function

- This function controls the magnetic contactor (MC) on the input side using the output relay to reduce the standby power during inverter stop. With the terminals R1/L11 and S1/L21 (refer to page 66) and 24 V external power supply input (refer to page 69), the main circuit power supply and control circuit power supply are separated, and the MC for main circuit power supply is controlled by the electronic bypass MC1 signal.
- Set **Pr.248 Self power management selection** = "1 or 2", **Pr.30 Regenerative function selection** ≠ "20, 21, 120, or 121" (other than DC feeding mode 2), and **Pr.190 to Pr.196 (Output terminal function selection)** = "17 (positive logic)" to assign the Electronic bypass MC1 (MC1) signal to an output terminal.
- After the inverter is stopped and the time set in **Pr.11 DC injection brake operation time** and **Pr.254 Main circuit power OFF waiting time** have passed, turning OFF the MC1 signal releases the MC on the input side (main circuit power supply OFF). Set **Pr.254** to prevent frequent MC operation.
- Turning ON the start signal turns ON the MC1 signal and closes the MC on the input side (main circuit power supply ON). After the time set in **Pr.137 Start waiting time** has passed, the inverter starts. Set time slightly longer (about 0.3 to 0.5 s) than the time period from the MC1-ON to the actual pick-up operation of the MC is turned ON in **Pr.137**.

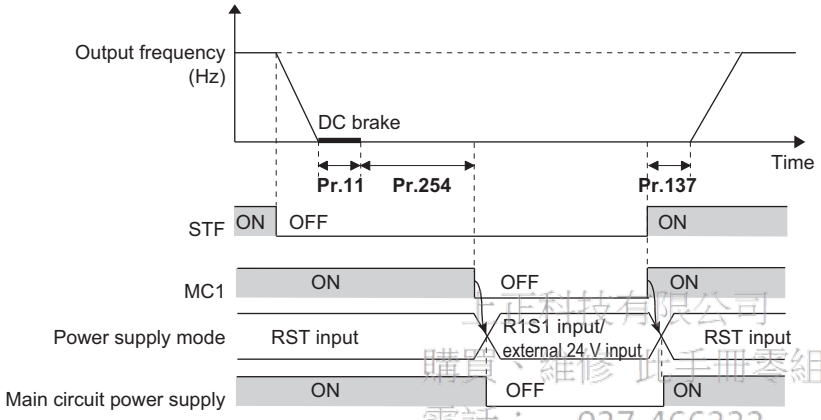

千岩科技有限公司
購買、維修 此手冊零組件
電話： 037-466333
Email: service@repairtw.com
Line id: @zzzz
www.repairtw.com

- When the protective function of the inverter is activated, the MC1 signal is immediately turned OFF according to the **Pr.248** setting. (The MC1 signal is turned OFF before the time set in **Pr.254** has passed.)
  When **Pr.248** ="1", the MC1 signal is turned OFF when the protective function is activated due to any cause.
  When **Pr.248** ="2", the MC1 signal is turned OFF only when the protective function is activated due to an error resulted from a failure in the inverter circuit or a wiring error (refer to the following table). (For the fault details, refer to page 568.)

Fault type
Inrush current limit circuit fault (E.IOH)
CPU fault (E.CPU)
CPU fault (E.6)
CPU fault (E.7)
Parameter storage device fault (E.PE)
Parameter storage device fault (E.PE2)
24 VDC power fault (E.P24)
Operation panel power supply short circuit/RS-485 terminals power supply short circuit (E.CTE)
Output side earth (ground) fault overcurrent (E.GF)
Output phase loss (E.LF)
Internal circuit fault (E.BE)
Internal circuit fault (E.13/E.PBT)

- To enable the self power management function for the separated converter type, enable the self power management function also on the converter unit side. To activate the self power management function when a converter unit fault occurs, connect the terminal to which the Y17 signal of the converter unit is assigned and the terminal to which X94 signal of the inverter is assigned.

Y17 output signal (on the converter unit side)	MC1 output signal (inverter side)	MC1 output signal actual operation	Main circuit power supply
OFF	OFF	OFF	Stop
OFF	ON	OFF	Stop
ON	OFF	OFF	Stop
ON	ON	ON	Supplied

- To use the X94 signal, set "94" in any of **Pr.178 to Pr.189 (Input terminal function selection)** to assign the function to an input terminal.

NOTE

- When the start signal is turned OFF before the time set in **Pr.137** has passed after the start signal is turned ON, the inverter does not start and the MC1 signal is turned OFF after the time set in **Pr.254** has passed.
  If the start signal is turned ON again before the time set in **Pr.254** has passed, the inverter immediately starts outputting.

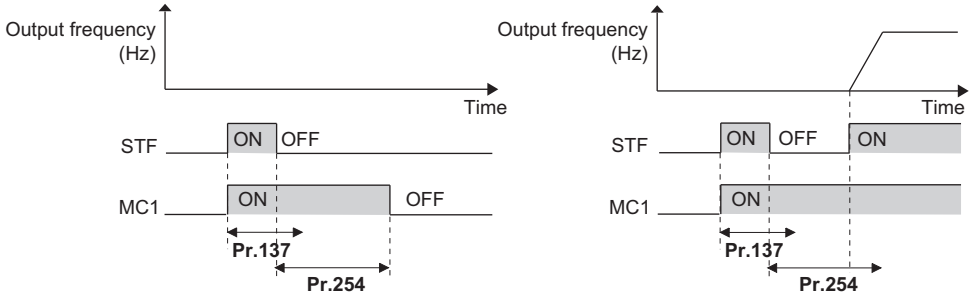

- At inverter reset, the status of the MC1 signal is held and operation of the magnetic contactor is not performed.
- When the inverter stops the output due to, for example, the Output stop (MRS) signal, the MC1 signal is turned OFF after the time set in **Pr.254** has passed.
- During the stop, turning ON the External DC injection brake operation start (X13) signal turns ON the MC1 signal.
- To avoid inverter reset when supplying power to the main circuit is started when power is supplied only to the control circuit, set 100 or more in **Pr.30**. (For the separated converter type, setting **Pr.30** of the converter unit is also required.)
- When supplying power to the main circuit is started when power is supplied only to the control circuit, there is a slight waiting time before starting.
- Repeated operation of the magnetic contactor due to frequent start and stop or activation of the protective function may shorten the inverter life.
- Changing the terminal assignment using **Pr.178 to Pr.189 (Input terminal function selection)** or **Pr.190 to Pr.196 (Output terminal function selection)** may affect the other functions. Set parameters after confirming the function of each terminal.

上正科技有限公司
購買、維修、出租、工業電腦
電話： 037-466333
Email: service@repairtw.com
Line id: @zzzz
www.repairtw.com

Parameters referred to

Pr.11 DC injection brake operation time ☞ page 535
Pr.30 Regenerative function selection ☞ page 539
Pr.190 to Pr.196 (Output terminal function selection) ☞ page 312

5.11.3 Start count monitor

The inverter starting times can be counted.

Confirming the starting times can be used to determine the timing of the maintenance, or can be used as a reference for system inspection or parts replacement.

Pr.	Name	Initial value	Setting range	Description
1410 A170	**Starting times lower 4 digits**	0	0 to 9999	Displays the lower four digits of the number of the inverter starting times.
1411 A171	**Starting times upper 4 digits**	0	0 to 9999	Displays the upper four digits of the number of the inverter starting times.

- Every start signal input (the RUN signal ON) while the inverter output is stopped is counted as the inverter starting time.

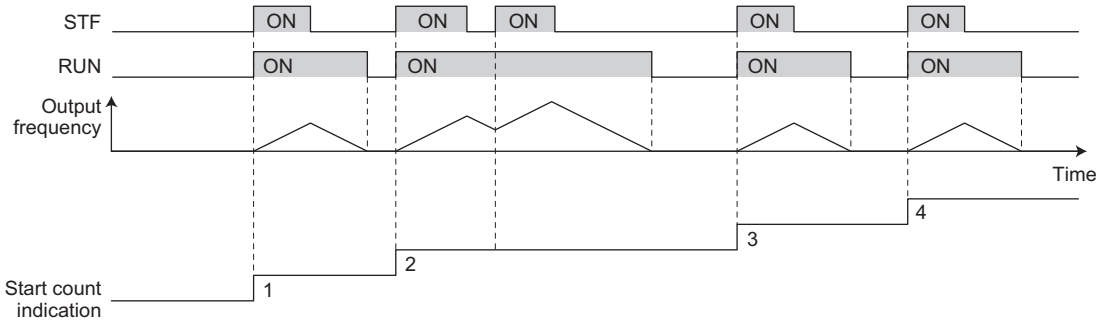

- The lower four digits of the number of starting times is displayed in **Pr.1410 Starting times lower 4 digits**, and the upper four digits of the number of starting times is displayed in **Pr.1411 Starting times upper 4 digits**.
- The maximum count is "99999999". When "99999999" is exceeded on the monitor, the monitor value is reset to 0.

Display data		Monitor display
10000	**Pr.1410** (Lower digits monitor)	0
	Pr.1411 (Upper digits monitor)	1
100	**Pr.1410** (Lower digits monitor)	100
	Pr.1411 (Upper digits monitor)	0

NOTE

- Any value can be set in **Pr.1410** or **Pr.1411**. Set "0" to clear the number on the monitor.
- Starting during offline auto tuning is not counted.
- The counting is enabled even if the RUN signal is not assigned to an output terminal.
- For the RUN signal, refer to page 312.
- Starting during the test operation (**Pr.800** = "9") is not counted.

中平科技有限公司
購買、維修 此手冊零組件
電話： 037-466333
Email: service@repairtw.com
Line id: @3333
www.repairtw.com

5.11.4 Traverse function

The traverse operation, which oscillates the frequency at a constant cycle, is available.

Pr.	Name	Initial value	Setting range	Description
592 **A300**	**Traverse function selection**	0	0	Traverse function invalid
			1	Traverse function valid only in External operation mode
			2	Traverse function valid regardless of the operation mode
593 **A301**	**Maximum amplitude amount**	10%	0 to 25%	Level of amplitude during traverse operation
594 **A302**	**Amplitude compensation amount during deceleration**	10%	0 to 50%	Compensation amount during amplitude inversion (from acceleration to deceleration)
595 **A303**	**Amplitude compensation amount during acceleration**	10%	0 to 50%	Compensation amount during amplitude inversion (from deceleration to acceleration)
596 **A304**	**Amplitude acceleration time**	5 s	0.1 to 3600 s	Time period of acceleration during traverse operation
597 **A305**	**Amplitude deceleration time**	5 s	0.1 to 3600 s	Time period of deceleration during traverse operation

- **Setting Pr.592 Traverse function selection** = "1 or 2" enables the traverse function.

- Assigning the Traverse function selection (X37) signal to the input terminal enables the traverse function only when the X37 signal is ON. (When the X37 signal is not assigned, the traverse function is always available.) To input the X37 signal, set "37" in any of **Pr.178 to Pr.189 (Input terminal function selection)** to assign the function to a terminal.

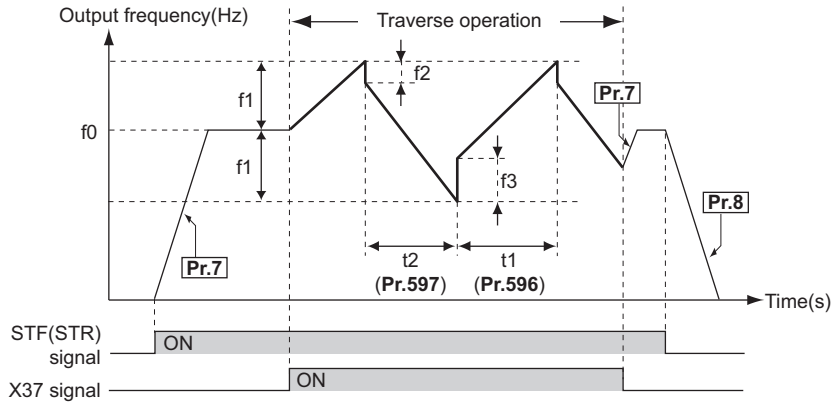

f0: set frequency
f1: amplitude amount from the set frequency (f0 × **Pr.593**/100)
f2: compensation amount at transition from acceleration to deceleration (f1 × **Pr.594**/100)
f3: compensation amount at transition from deceleration to acceleration (f1 × **Pr.595**/100)
t1: time from acceleration during traverse operation (Time from (f0 – f1) to (f0 + f1)) (**Pr.596**)
t2: time from deceleration during traverse operation (Time from (f0 + f1) to (f0 – f1)) (**Pr.597**)

- The motor accelerates to the set frequency f0 according to the normal **Pr.7 Acceleration time** at turn ON of the start command (STF or STR).
- When the output frequency reaches f0 and the X37 signal turns ON, the inverter begins traverse operation and accelerates to f0 + f1. The acceleration time at this time is according to the **Pr.596** setting. (If the X37 signal turns ON before the output frequency reaches f0, traverse operation begins after the output frequency reaches f0.)
- After the inverter accelerates the motor to f0 + f1, this is compensated with f2 (f1 × **Pr.594**), and the motor decelerates to f0 - f1. The deceleration time at this time is according to the **Pr.597** setting.
- After the inverter decelerates the motor to f0 - f1, this is compensated with f3 (f1 × **Pr.595**), and the motor accelerates again to f0 + f1.
- When the X37 signal turns OFF during traverse operation, the inverter accelerates/decelerates the motor to f0 according to the normal acceleration/deceleration time (**Pr.7, Pr.8**). If the start command (STF or STR) is turned OFF during traverse operation, the inverter decelerates the motor to a stop according to the normal deceleration time (**Pr.8**).

上正科技有限公司
購買、維修 工業自動化零組件
電話：
Email: service@repairtw.com
www.repairtw.com

NOTE

- If the set frequency (f0) and traverse operation parameters (**Pr.598 to Pr.597**) are changed during traverse operation, this is applied in operations after the output frequency reaches f0 before the change was made.
- If the output frequency exceeds **Pr.1 Maximum frequency** or **Pr.2 Minimum frequency** during traverse operation, the output frequency is clamped at the maximum/minimum frequency when the set pattern exceeds the maximum/minimum frequency.
- When the traverse function and S-pattern acceleration/deceleration (**Pr.29** ≠ "0") are selected, S-pattern acceleration/deceleration operation occurs only in the range operated at the normal acceleration/deceleration time (**Pr.7, Pr.8**). Acceleration/deceleration during traverse operation is performed linearly.
- If stall prevention activates during traverse operation, traverse operation stops and normal operation begins. When stall prevention operation is completed, the inverter accelerates/decelerates to f0 at the normal acceleration/deceleration time (**Pr.7, Pr.8**). After the output frequency reaches f0, the traverse operation begins again.
- If the value of the amplitude inversion compensation amount (**Pr.594, Pr.595**) is too large, an overvoltage trip or stall prevention occurs, and pattern operation cannot be performed as set.
- Changing the terminal assignment using **Pr.178 to Pr.189 (Input terminal function selection)** may affect the other functions. Set parameters after confirming the function of each terminal.

Parameters referred to

Pr.3 Base frequency ☞ page 528
Pr.178 to Pr.189 (Input terminal function selection) ☞ page 355
Pr.190 to Pr.196 (Output terminal function selection) ☞ page 312

5.11.5 Cleaning function

This is a function to remove stains or foreign matter on the impellers or fans of pumps by setting a forward/reverse rotation sequence.

Pr.	Name	Initial value	Setting range	Description
1469 **A420**	**Number of cleaning times monitor**	0	0 to 255	Displays the number of cleaning times. (Read-only)
1470 **A421**	**Number of cleaning times setting**	0	0 to 255	Set the number of cleaning times.
1471 **A422**	**Cleaning trigger selection**	0	0 to 15	Select the condition to start cleaning.
1472 **A423**	**Cleaning reverse rotation frequency**	30 Hz	0 to 590 Hz	Set the reverse rotation frequency for cleaning operation.
1473 **A424**	**Cleaning reverse rotation operation time**	5 s	0 to 3600 s	Set the operating time after the cleaning forward rotation frequency is reached.
1474 **A425**	**Cleaning forward rotation frequency**	9999	0 to 590 Hz	Set the forward rotation frequency for cleaning operation.
			9999	As set in **Pr.1472**.
1475 **A426**	**Cleaning forward rotation operation time**	9999	0 to 3600 s	Set the operating time after the cleaning forward rotation frequency is reached.
			9999	As set in **Pr.1473**.
1476 **A427**	**Cleaning stop time**	5 s	0 to 3600 s	Set the stop time when the rotation is switched from forward to reverse or from reverse to forward.
1477 **A428**	**Cleaning acceleration time**	9999	0 to 3600 s	Set the acceleration time for cleaning.
			9999	Acceleration time for normal operation.
1478 **A429**	**Cleaning deceleration time**	9999	0 to 3600 s	Set the deceleration time for cleaning.
			9999	Deceleration time for normal operation.
1479 **A430**	**Cleaning time trigger**	0	0	Time trigger disabled
			0.1 to 6000 h	Cleaning is performed at a set time interval.

上正科技有限公司
購買、維修 此手冊零組件
電話： 037-466333
Email: service@repairtw.com
Line id: @zzzz
www.repairtw.com

◆ Outline of the cleaning operation

- Setting a number in **Pr.1470 Number of cleaning times setting** enables the cleaning function.
- The cleaning operation is started when the trigger set in **Pr.1471** or **Pr.1479** occurs, or when the X98 signal turns ON. When the cleaning is started initially, the operation in the opposite direction to the start command is performed.

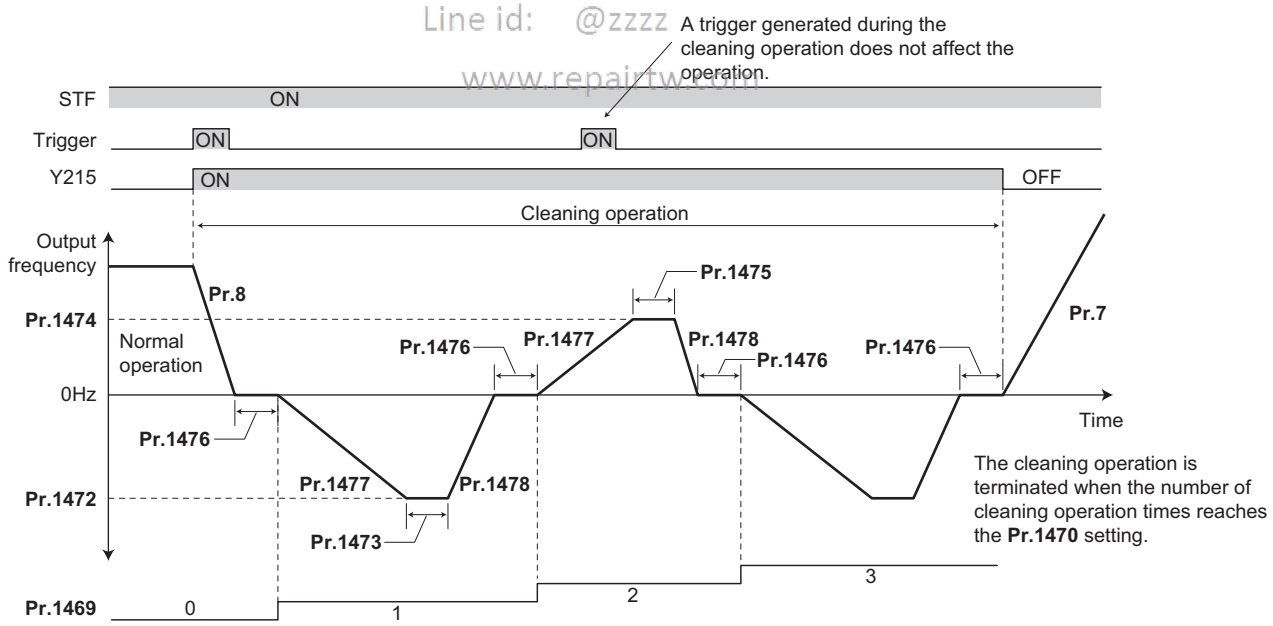

- When the number of times of cleaning operation is an odd number, the operation in the opposite direction to the start command is performed. When the number of cleaning times is an even number, the operation in the start command direction is performed.

- When the motor rotation direction is restricted in **Pr.78 Reverse rotation prevention selection**, rotation is performed not in the prohibited direction but in the permitted direction.

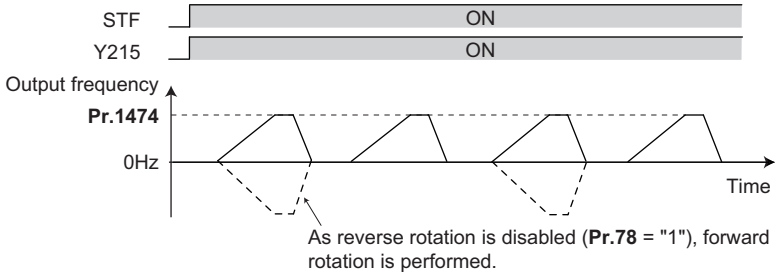

- Use **Pr.1472 Cleaning reverse rotation frequency** and **Pr.1474 Cleaning forward rotation frequency** to set the running frequency for cleaning operation, and use **Pr.1473 Cleaning reverse rotation operation time** and **Pr.1475 Cleaning forward rotation operation time** to set the operating time after the cleaning running frequency is reached.
- Use **Pr.1477 Cleaning acceleration time** and **Pr.1478 Cleaning deceleration time** to set the acceleration/deceleration time for cleaning operation.
- The Y215 signal turns ON during cleaning operation. For the Y215 signal, set "215 (positive logic)" or "315 (negative logic)" in any of **Pr.190 to Pr.196 (Output terminal function selection)** to assign the function.

◆ Cleaning trigger selection (Pr.1471, Pr.1479, X98 signal)

- Use **Pr.1471 Cleaning trigger selection** to select the trigger to start cleaning operation. As set in **Pr.1471**, cleaning operation is started when any of the applicable trigger conditions is satisfied.

Pr.1471 setting	Trigger factor	Value in each bit		Remarks
		0	1	
Bit 0	Start trigger	Trigger disabled.	Trigger enabled.	Turning ON of the start command is defined as a trigger.*1*6*7
Bit 1	Output current	Trigger disabled.	Trigger enabled.	Turning ON of the Y12 signal is defined as a trigger.*2*5
Bit 2	PID upper/lower limit	Trigger disabled.	Trigger enabled.	Turning ON of the FUP, FDN, FUP2, or FDN2 signal is defined as a trigger.*3*5
Bit 3	Load warning	Trigger disabled.	Trigger enabled.	Turning ON of the LUP or LDN signal is defined as a trigger.*4*5
—	X98 signal input	—		Turning ON of X98 signal is defined as a trigger. (This trigger is always enabled by assigning the X98 signal to an input terminal.)
—	Time trigger	—		When **Pr.1479** ≠ "0", the trigger is enabled.

上巨科技有限公司
專業 維修 供料 整組銷售
電話：037-466338
Email: service@repairtw.com
Line id: @zzzz
www.repairtw.com

*1 The ON state at power-ON or inverter reset is not regarded as a trigger.
*2 Use **Pr.150** and **Pr.151** to set the detection level. (Refer to page 321.)
*3 Use **Pr.131, Pr.132, Pr.1143**, and **Pr.1144** to set the detection level. When the frequency reflection is not provided for the PID setting, or when the function is disabled, a trigger does not occur. (Refer to page 401.)
*4 Set the load characteristics fault detection function. When the function is disabled, a trigger does not occur. (Refer to page 281.)
*5 The output signal can be used as a trigger if the signal is not assigned to a terminal.
*6 When the automatic restart after instantaneous power failure is set for every start, or when the online auto tuning is enabled, cleaning is started upon completion of the set operations.
*7 While the self power management is enabled, the start trigger is disabled.

- Convert a bit image (binary) of the trigger factor into a decimal value, and set the value in **Pr.1471**.

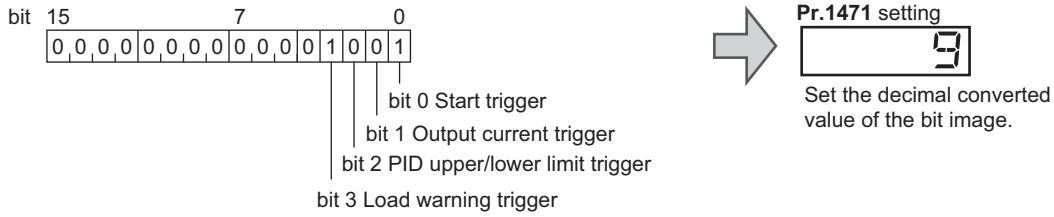

○: Trigger enabled, ×: Trigger disabled

Pr.1471		bit 3	bit 2	bit 1	bit 0
Decimal	Binary				
15	1111	○	○	○	○
14	1110	○	○	○	×
13	1101	○	○	×	○
12	1100	○	○	×	×
11	1011	○	×	○	○
10	1010	○	×	○	×
9	1001	○	×	×	○
8	1000	○	×	×	×

Pr.1471		bit 3	bit 2	bit 1	bit 0
Decimal	Binary				
7	0111	×	○	○	○
6	0110	×	○	○	×
5	0101	×	○	×	○
4	0100	×	○	×	×
3	0011	×	×	○	○
2	0010	×	×	○	×
1	0001	×	×	×	○
0	0000	×	×	×	×

- Turning ON of the X98 signal can be used as a trigger to start the cleaning operation. For the X98 signal input, set "98" in any of **Pr.178 to Pr.189** to assign the function.
- When using the cleaning function for the purpose of periodic maintenance in such applications that require continuous pump operation for a long time, use a time trigger. The time trigger is enabled by setting a time period before starting the cleaning operation in **Pr.1479 Cleaning time trigger**. The timer starts when the timer starting condition is satisfied, and the cleaning operation is performed at a time interval set in **Pr.1479**.
- Starting conditions of the timer for a time trigger
  When the start command turns ON
  When the cleaning ends

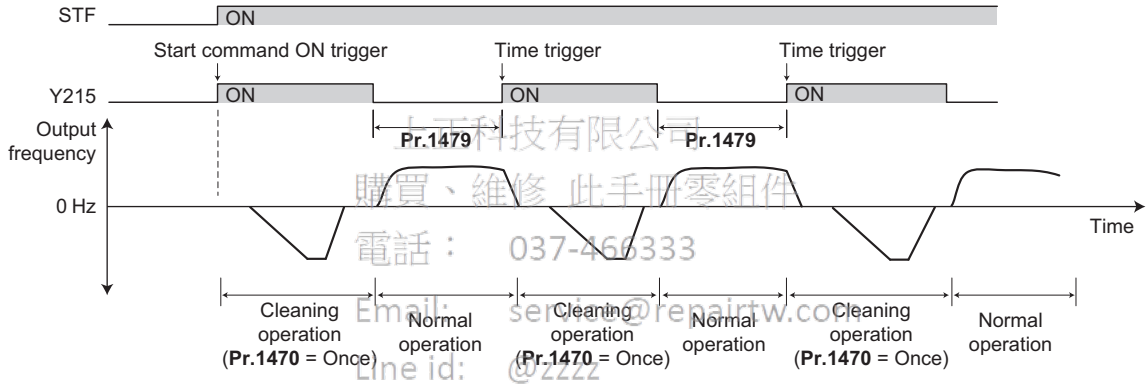

上禾科技有限公司
購買、維修 此手冊零組件
電話： 037-466333
Email: service@repairtw.com
Line id: @2222
www.repairtw.com

◆ Cleaning operation by the cleaning signal (X97 signal)

- When X97 signal is assigned to an input terminal, the cleaning operation can be finished when the cleaning signal (X97) is turned from ON to OFF.
- For the X97 signal input, set "97" in any of **Pr.178 to Pr.189** to assign the function.

Pr.1470 setting	X97 signal		Cleaning operation	Cleaning end condition
	Assignment	ON/OFF		
0	Optional	Optional	Disabled	—
Other than 0	Not assigned	—	Enabled	After cleaning is performed for the number of times set in **Pr.1470**.
	Assigned	OFF	Disabled	—
		ON	Enabled	• After cleaning is performed for the number of times set in **Pr.1470**. • When X97 signal turns OFF.

NOTE

- When a trigger occurs during the following operations, the cleaning operation is started upon completion of the following operations.
  Automatic restart after instantaneous power failure, online auto tuning at startup
- The following functions are disabled during cleaning operation.
  PID control automatic switchover frequency, PID control sleep function, pre-charge fault, determination of pre-charge ending with parameters, PID gain tuning, switchover to the commercial power supply operation with the automatic switchover frequency of the inverter (**Pr.139**), automatic switchover of auxiliary motors of the multi-pump function, output stop function (**Pr.522**), restart at every start during cleaning
- When the stall prevention is activated during acceleration of the cleaning function, the operation is shifted to the cleaning deceleration operation.
- If the number of cleaning times set in **Pr.1470** is an even number, the operation is shifted to the normal operation after the cleaning forward/reverse operation time (**Pr.1473/Pr.1475**) of the final cleaning operation has elapsed.
- Changing the terminal assignment with **Pr.178 to Pr.189** and **Pr.190 to Pr.196** may affect other functions. Set parameters after confirming the function of each terminal.

Parameters referred to
Pr.178 to Pr.189 (Input terminal function selection) ☞ page 355
Pr.190 to Pr.196 (Output terminal function selection) ☞ page 312
Pr.7 Acceleration time, Pr.8 Deceleration time ☞ page 216

5.11.6 PID control

Process control such as flow rate, air volume or pressure are possible on the inverter.

A feedback system can be configured and PID control can be performed using the terminal 2 input signal or parameter setting value as the set point and the terminal 4 input signal as the feedback value.

上正科技有限公司
購買、維修、免手冊零組件
電話： 037-466333
Email: service@repairtw.com
Line id: 0937022
www.repairtw.com

Pr.	Name	Initial value	Setting range	Description
127 **A612**	**PID control automatic switchover frequency**	9999	0 to 590 Hz	Set the value at which control is automatically switched to PID control.
			9999	No PID control automatic switchover function
128 **A610**	**PID action selection**	0	0, 10, 11, 20, 21, 50, 51, 60, 61, 70, 71, 80, 81, 90, 91, 100, 101, 1000, 1001, 1010, 1011, 2000, 2001, 2010, 2011	Select how to input the deviation value, measured value and set point, and forward and reverse action.
129 **A613**	**PID proportional band**	100%	0.1 to 1000%	If a narrow proportional band is set (small parameter setting value), the manipulated amount changes considerably by slight changes in the measured value. As a result, response improves as the proportional band becomes narrower, though stability worsens as shown by the occurrence of hunting. Gain Kp=1/proportional band
			9999	No proportional control
130 **A614**	**PID integral time**	1 s	0.1 to 3600 s	With deviation step input, this is the time (Ti) used for obtaining the same manipulated amount as proportional band (P) by only integral (I) action. Arrival to the set point becomes quicker the shorter an integral time is set, though hunting is more likely to occur.
			9999	No integral control
131 **A601**	**PID upper limit**	9999	0 to 100%	Set the upper limit. The FUP signal is output when the feedback value exceeds this setting. The maximum input (20 mA/5 V/10 V) of the measured value is equivalent to 100%.
			9999	No function
132 **A602**	**PID lower limit**	9999	0 to 100%	Set the lower limit. The FDN signal is output when the measured value falls below the setting range. The maximum input (20 mA/5 V/10 V) of the measured value is equivalent to 100%.
			9999	No function
133 **A611**	**PID action set point**	9999	0 to 100%	Set the set point during PID control.
			9999	Set point set by **Pr.128**.

Pr.	Name	Initial value	Setting range	Description
134 **A615**	**PID differential time**	9999	0.01 to 10 s	With deviation ramp input, this is the time (Td) used for obtaining the manipulated amount only by proportional action (P). Response to changes in deviation increase greatly as the differential time increases.
			9999	No differential control
553 **A603**	**PID deviation limit**	9999	0 to 100%	The Y48 signal is output when the absolute value of the deviation exceeds the deviation limit value.
			9999	No function
554 **A604**	**PID signal operation selection**	0	0 to 7, 10 to 17	The action when the upper or lower limit for a measured value input is detected or when a limit for the deviation is detected can be selected. The operation for PID output suspension function can be selected.
575 **A621**	**Output interruption detection time**	1 s	0 to 3600 s	When the output frequency after PID calculation stays less than the **Pr.576** setting for the time set in **Pr.575** or more, the inverter operation is suspended.
			9999	No output interruption function
576 **A622**	**Output interruption detection level**	0 Hz	0 to 590 Hz	Set the frequency at which output interruption is performed.
577 **A623**	**Output interruption cancel level**	1000%	900 to 1100%	Level at which the PID output suspension function is released. Set "**Pr.577** - 1000%".
609 **A624**	**PID set point/deviation input selection**	2	1	Input of set point, deviation value from terminal 1
			2	Input of set point, deviation value from terminal 2
			3	Input of set point, deviation value from terminal 4
			4	Input of set point, deviation value via communication
			5	Input of set point, deviation value by PLC function
610 **A625**	**PID measured value input selection**	3	1	Terminal 1 input Direct input of the measured value
			2	Terminal 2 input
			3	Terminal 4 input
			4	Communication input
			5	PLC function input
			101	Terminal 1 input Input of the square root of the measured value
			102	Terminal 2 input
			103	Terminal 4 input
			104	Communication input
			105	PLC function input
1015 **A607**	**Integral stop selection at limited frequency**	0	0	Integral stopped at the limit, manipulation range of ±100%, integral cleared during output interruption
			1	Integral continued at the limit, manipulation range of ±100%, integral cleared during output interruption
			2	Integral stopped at the limit, manipulation range of 0 to 100%, integral cleared during output interruption
			10	Integral stopped at the limit, manipulation range of ±100%, integral stopped during output interruption
			11	Integral continued at the limit, manipulation range of ±100%, integral stopped during output interruption
			12	Integral stopped at the limit, manipulation range of 0 to 100%, integral stopped during output interruption
1370 **A442**	**Detection time for PID limiting operation**	0 s	0 to 900 s	Set the time from when the measured value input exceeds the **Pr.131** or **Pr.132** setting until the FUP or FDN signal is output.
1460 **A683**	**PID multistage set point 1**	9999	0 to 100%	Seven set points can be set according to the combination of the PDI1, PDI2, and PDI3 signals. 9999: Not selected
1461 **A684**	**PID multistage set point 2**			
1462 **A685**	**PID multistage set point 3**			
1463 **A686**	**PID multistage set point 4**			
1464 **A687**	**PID multistage set point 5**			
1465 **A688**	**PID multistage set point 6**			
1466 **A689**	**PID multistage set point 7**			

上正科技有限公司
購買、維修 此為樣參閱
電話： 037-488333
Email: service@repairtw.com
Line id: @zzzz
www.repairtw.com

Pr.	Name	Initial value	Setting range	Description	
753 A650	**Second PID action selection**	0	0, 10, 11, 20, 21, 50, 51, 60, 61, 70, 71, 80, 81, 90, 91, 100, 101, 1000, 1001, 1010, 1011, 2000, 2001, 2010, 2011	Refer to **Pr.128**.	Set the second PID control. For how to enable the second PID control, refer to page 415.
754 A652	**Second PID control automatic switchover frequency**	9999	0 to 590 Hz, 9999	Refer to **Pr.127**.	
755 A651	**Second PID action set point**	9999	0 to 100%, 9999	Refer to **Pr.133**.	
756 A653	**Second PID proportional band**	100	0.1 to 1000%, 9999	Refer to **Pr.129**.	
757 A654	**Second PID integral time**	1 s	0.1 to 3600 s, 9999	Refer to **Pr.130**.	
758 A655	**Second PID differential time**	9999	0.01 to 10 s, 9999	Refer to **Pr.134**.	
1140 A664	**Second PID set point/ deviation input selection**	2	1 to 5	Refer to **Pr.609**.	
1141 A665	**Second PID measured value input selection**	3	1 to 5, 101 to 105	Refer to **Pr.610**.	
1143 A641	**Second PID upper limit**	9999	0 to 100%, 9999	Refer to **Pr.131**.	
1144 A642	**Second PID lower limit**	9999	0 to 100%, 9999	Refer to **Pr.132**.	
1145 A643	**Second PID deviation limit**	9999	0 to 100%, 9999	Refer to **Pr.553**. (The Y205 signal is output.)	
1146 A644	**Second PID signal operation selection**	0	0 to 7, 10 to 17	Refer to **Pr.554**.	
1147 A661	**Second output interruption detection time**	1 s	0 to 3600 s, 9999	Refer to **Pr.575**.	
1148 A662	**Second output interruption detection level**	0 Hz	0 to 590 Hz	Refer to **Pr.576**.	
1149 A663	**Second output interruption cancel level**	1000%	900 to 1100%	Refer to **Pr.577**.	

上正科技有限公司
購買、維修 此手冊零組件
電話： 037-466333
Email: service@repairtw.com
Line id: @zzzz
www.repairtw.com

◆ Basic configuration of PID control

■ Pr.128 ="10, 11" (deviation value signal input)

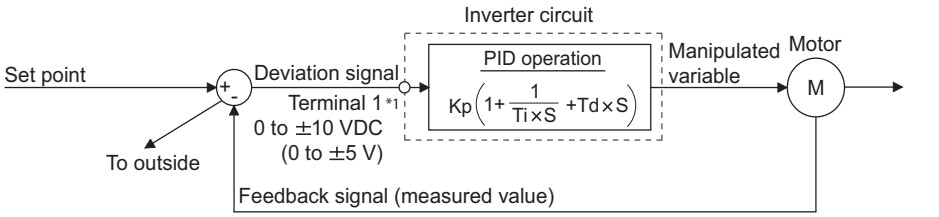

Kp: Proportionality constant Ti: Integral time S: Operator Td: Differential time

*1 Set "0" to **Pr.868 Terminal 1 function assignment**. When **Pr.868** ≠ "0", PID control is invalid.

■ Pr.128 = "20, 21" (measured value input)

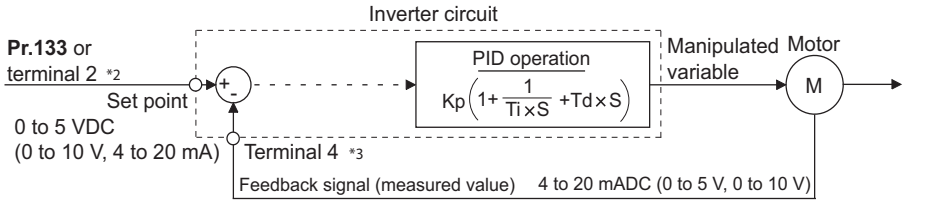

Kp: Proportionality constant Ti: Integral time S: Operator Td: Differential time

*2 Note that the input of terminal 1 is added to the set point of terminal 2 as a set point.

*3 Set "0" to **Pr.858 Terminal 4 function assignment**. When **Pr.858** ≠ "0", PID control is invalid.

◆ PID action outline

■ PI action

PI action is a combination of proportional action (P) and integral action (I), and applies a manipulated amount according to the size of the deviation and transition or changes over time.

[Example of action when the measured value changes in a stepped manner]

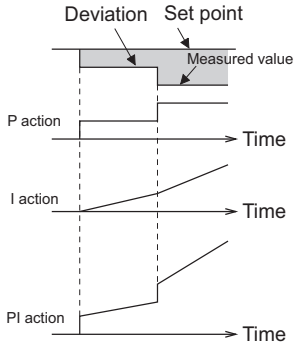

(Note) PI action is the result of P and I actions being added together.

■ PD action

PD action is a combination of proportional action (P) and differential action (D), and applies a manipulated amount according to the speed of the deviation to improve excessive characteristics.

[Example of action when the measured value changes proportionately]

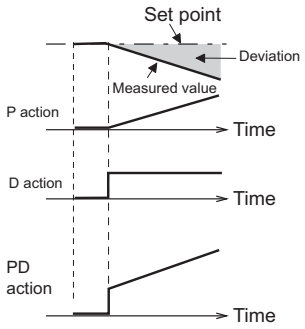

上正科技有限公司
購買、維修 此手冊零組件
電話： 037-466333
Email: service@repairtw.com
Line id: @zzzz
www.repairtw.com

(Note) PD action is the result of P and D actions being added together.

■ PID action

PID action is a combination of PI and PD action, which enables control that incorporates the respective strengths of these actions.

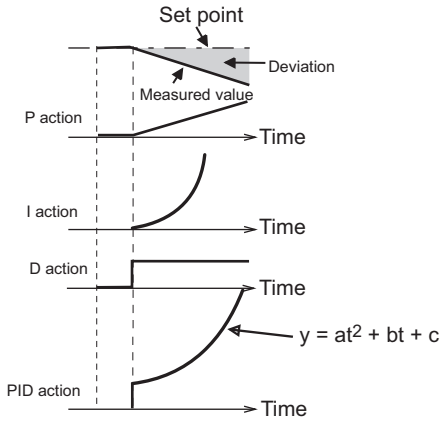

(Note) PID action is the result of all P, I and D actions being added together.

■ Reverse action

When deviation X = (set point - measured value) is a plus value, the manipulated amount (output frequency) is increased, and when the deviation is a minus value, the manipulated amount is decreased.

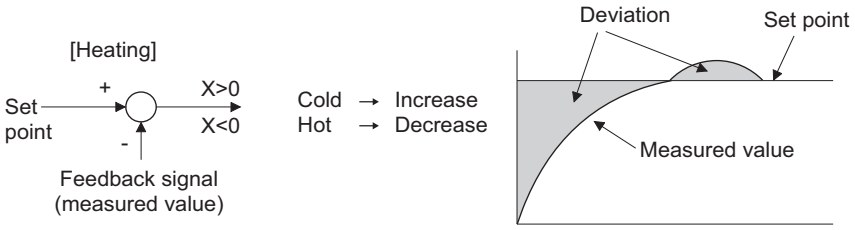

■ Forward action

When deviation X = (set point - measured value) is a minus value, the manipulated amount (output frequency) is increased, and when the deviation is a plus value, the manipulated amount is decreased.

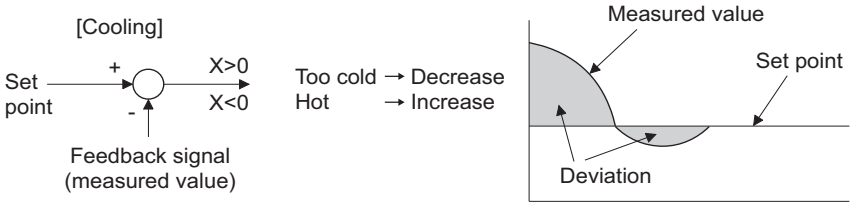

Relationship between deviation and manipulated amount (output frequency)

PID action setting	Deviation	
	Plus	Minus
Reverse action	↗	↘
Forward action	↘	↗

上正科技有限公司
購買、維修 此手冊零組件
電話： 037-466333
Email: service@repairtw.com
Line id: @zzzz
www.repairtw.com

◆ Connection diagram

- Sink logic
- **Pr.128** = 20
- **Pr.183** = 14
- **Pr.191** = 47
- **Pr.192** = 16
- **Pr.193** = 14
- **Pr.194** = 15

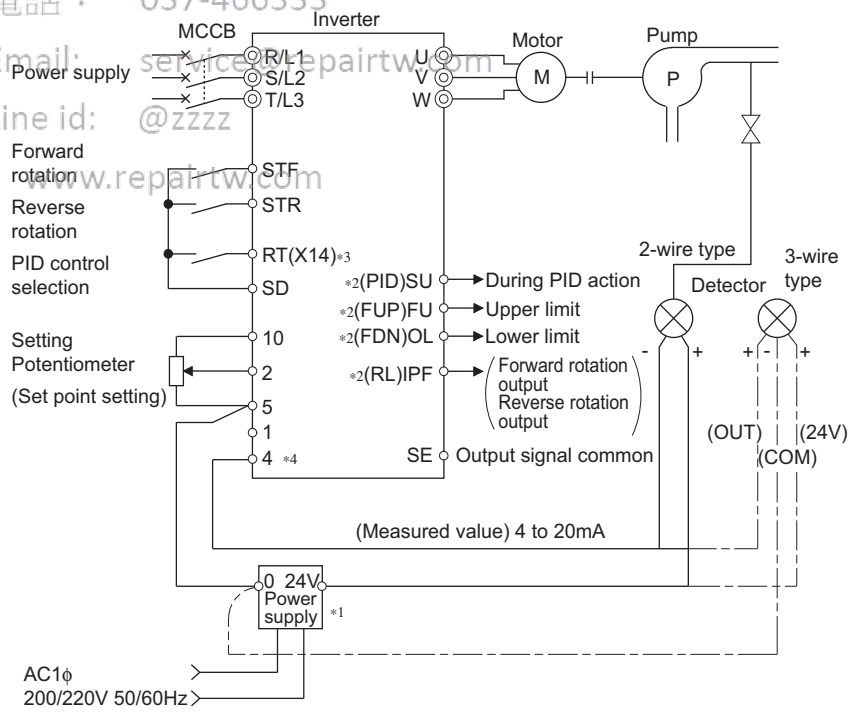

*1 Prepare a power supply matched to the power supply specifications of the detector.
*2 The applied output terminals differ by the settings of **Pr.190 to Pr.196 (Output terminal function selection)**.
*3 The applied input terminals differ by the settings of **Pr.178 to Pr.189 (Input terminal function selection)**
*4 The AU signal need not be input.

◆ Selection of deviation value, measured value and set point input method, and PID action method (Pr.128, Pr.609, Pr.610)

- Using **Pr.128**, select the input method for the PID set point, measured value detected by the meter, and externally calculated deviation. Also, select forward or reverse action.
- Switch the power voltage/current specifications of terminals 2 and 4 by **Pr.73 Analog input selection** or **Pr.267 Terminal 4 input selection** to match the specification of the input device. After changing the **Pr.73** or **Pr.267** settings, check the voltage/current input selection switch. Incorrect setting may cause a fault, failure or malfunction. (Refer to page 330 for the setting.)

Pr.128 setting	Pr.609 Pr.610	PID action	Set point input	Measured value input	Deviation input
0	Invalid	PID invalid	—	—	—
10		Reverse action	—	—	Terminal 1
11		Forward action			
20		Reverse action	Terminal 2 or **Pr.133**[*1]	Terminal 4	—
21		Forward action			
50	Invalid	Reverse action	—	—	Communication[*2]
51		Forward action			
60		Reverse action	Communication[*2]	Communication[*2]	—
61		Forward action			
70		Reverse action	—	—	PLC function (with frequency applied)[*3]
71		Forward action			
80		Reverse action	PLC function (with frequency applied)[*3]	PLC function (with frequency applied)[*3]	—
81		Forward action			
90		Reverse action	—	—	PLC function (without frequency applied)[*3]
91		Forward action			
100		Reverse action	PLC function (without frequency applied)[*3]	PLC function (without frequency applied)[*3]	—
101		Forward action			
1000	Enabled	Reverse action	According to **Pr.609**.[*1]	According to **Pr.610**.	—
1001		Forward action			
1010		Reverse action	—	—	According to **Pr.609**.
1011		Forward action			
2000		Reverse action (without frequency reflected)	According to **Pr.609**.[*1]	According to **Pr.610**.	—
2001		Forward action (without frequency reflected)			
2010		Reverse action (without frequency reflected)	—	—	According to **Pr.609**.
2011		Forward action (without frequency reflected)			

*1 When **Pr.133** ≠ "9999", the **Pr.133** setting is valid.

*2 BACnet MS/TP, CC-Link, CC-Link IE Field Network, or LONWORKS communication is available. For the details of BACnet MS/TP protocol, refer to page 511. For details of other types of communication, refer to the Instruction Manual of each option.

*3 For the details of the PLC function, refer to the FR-A800 PLC Function Programming Manual.

上正科技有限公司
購買、維修 此手冊零組件
電話：[illegible]166333
Email: service@repairtw.com
Line id: @2222
www.repairtw.com

- The set point/deviation input method can also be flexibly selected by **Pr.609 PID set point/deviation input selection** and the measured value input method can be selected by **Pr.610 PID measured value input selection**. Selection by **Pr.609** and **Pr.610** is enabled when **Pr.128** = "1000 to 2011".

Setting value		Command source	Input method
Pr.609	Pr.610		
1	1	Terminal 1*4	Direct input
2	2	Terminal 2*4	
3	3	Terminal 4*4	
4	4	Communication*5	
5	5	PLC function	
—	101	Terminal 1*4	Square root input
—	102	Terminal 2*4	
—	103	Terminal 4*4	
—	104	Communication*5	
—	105	PLC	

*4 When the same command source has been selected for the set point and measured value at **Pr.609** and **Pr.610**, set point input is invalid. (Inverter runs at set point 0%)

*5 BACnet MS/TP, CC-Link, CC-Link IE Field Network, or LONWORKS communication is available. For the details of BACnet MS/TP protocol, refer to page 511. For details of other types of communication, refer to the Instruction Manual of each option.

- When **Pr.610 PID measured value input selection** = "101 to 105", the square root of the input value is used as the measured value. The setting is used when pressure is measured for controlling the flow rate and the following relationship exists.

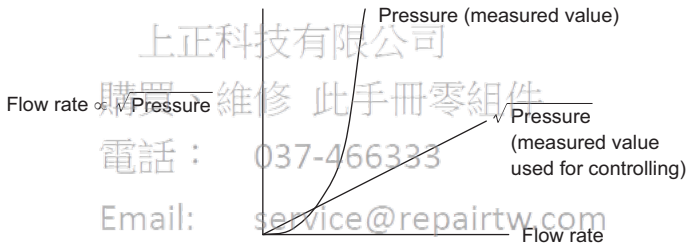

上正科技有限公司
購買、維修 此手冊零組件
電話： 037-466333
Email: service@repairtw.com
Line id: @zzzz
www.repairtw.com

NOTE

- When terminals 2 and 4 are selected for deviation input, perform bias calibration using **C3** and **C6** to prevent a minus voltage from being entered as the deviation input signal. Input of a minus voltage might damage devices and the inverter.

- The following shows the relationship between the input values of the analog input terminals and set point, measured value and deviation. (Calibration parameter initial values)

Input terminal	Input specification*6	Relationship with analog input			Calibration parameter
		Set point	Result	Deviation	
Terminal 2	0 to 5 V	0 V = 0% 5 V = 100%	0 V = 0% 5 V = 100%	0 V = 0% 5 V = 100%	**Pr.125, C2 to C4**
	0 to 10 V	0 V = 0% 10 V = 100%	0 V = 0% 10 V = 100%	0 V = 0% 10 V = 100%	
	0 to 20 mA	0 mA = 0% 20 mA = 100%	0 mA = 0% 20 mA = 100%	0 mA = 0% 20 mA = 100%	
Terminal 1	0 to ±5 V	-5 to 0 V = 0% +5 V = +100%	-5 to 0 V = 0% +5 V = +100%	-5 V = -100% 0 V = 0% +5 V = +100%	When **Pr.128** = "10": **Pr.125, C2 to C4**. When **Pr.128** ≥ "1000": **C12, C2 to C15**.
	0 to ±10 V	-10 to 0 V = 0% +10 V = +100%	-10 to 0 V = 0% +10 V = +100%	-10 V = -100% 0 V = 0% +10 V = +100%	
Terminal 4	0 to 5 V	0 to 1 V = 0% 5 V = 100%	0 to 1 V = 0% 5 V = 100%	0 V = -20% 1 V = 0% 5 V = 100%	**Pr.126, C5 to C7**
	0 to 10 V	0 to 2 V = 0% 10 V = 100%	0 to 2 V = 0% 10 V = 100%	0 V = -20% 2 V = 0% 10 V = 100%	
	0 to 20 mA	0 to 4 mA = 0% 20 mA = 100%	0 to 4 mA = 0% 20 mA = 100%	0 mA = -20% 4 mA = 0% 20 mA = 100%	

*6 Can be changed by **Pr.73 Analog input selection, Pr.267 Terminal 4 input selection** and the voltage/current input switch. (Refer to page 330.)

NOTE

- Always calibrate the input after changing the voltage/current input specification with **Pr.73** and **Pr.267**, and the voltage/current input selection switch.

上正科技有限公司
購買、維修 此手冊零組件
電話: 887-4653333
Email: service@repairtw.com
Line id: @zzzz
www.repairtw.com

◆ Multistage set point input (Pr.1460 to Pr.1466)

- The set point can be selected by combining the ON/OFF status of the PDI1 to PDI3 signals. Up to eight set points can be selected. Use **Pr.1460 PID multistage set point 1 to Pr.1466 PID multistage set point 7** to set the target values for selection.
- When "9999" is set in the selected multistage set point parameter, PID control is performed according to the **Pr.128, Pr.609**, and **Pr.133** settings.

Selected set point	PDI1*1	PDI2*1	PDI3*1	Parameter for setting
—	OFF	OFF	OFF	As set in the **Pr.128** and **Pr.609** PID settings. As set in **Pr.133** when **Pr.133** ≠ "9999".
Multistage set point 1	ON	OFF	OFF	**Pr.1460**
Multistage set point 2	OFF	ON	OFF	**Pr.1461**
Multistage set point 3	ON	ON	OFF	**Pr.1462**
Multistage set point 4	OFF	OFF	ON	**Pr.1463**
Multistage set point 5	ON	OFF	ON	**Pr.1464**
Multistage set point 6	OFF	ON	ON	**Pr.1465**
Multistage set point 7	ON	ON	ON	**Pr.1466**

*1 When functions are not assigned to the input terminals, the signals are treated as OFF.

NOTE

- The multistage set point input is not available for the second PID.
- The priority of the set point input is as follows: **Pr.1460 to Pr.1466**> **Pr.133**> **Pr.128**.

◆ Input/output signals

- Assigning the PID control valid (X14) signal to the input terminal by **Pr.178 to Pr.189 (Input terminal function selection)** enables PID control to be performed only when the X14 signal is turned ON. When the X14 signal is OFF, regular inverter running is performed without PID action . (When the X14 signal is not assigned, PID control is enabled only by setting **Pr.128** ≠ "0".)

- Input signal

Signal	Function	Pr.178 to Pr.189 setting	Description
X14	PID control valid	14	When this signal is assigned to the input terminal, PID control is enabled when this signal is ON.
X80	Second PID control valid	80	
PDI1	PID multistage set point setting 1	38	The set point set in **Pr.1460 to Pr.1466** can be selected by combining the ON/OFF status of the signals.
PDI2	PID multistage set point setting 2	39	
PDI3	PID multistage set point setting 3	40	
X64	PID forward/reverse action switchover	64	PID control is switched between forward and reverse action without changing parameters by turning ON this signal.
X79	Second PID forward/reverse action switchover	79	
X72	PID P control switchover	72	Integral and differential values can be reset by turning ON this signal.
X73	Second PID P control switchover	73	

- Output signal

Signal	Function	Pr.190 to Pr.196 setting		Description
		Positive logic	Negative logic	
FUP	PID upper limit	15	115	Output when the measured value signal exceeds **Pr.131 PID upper limit (Pr.1143 Second PID upper limit)**.
FUP2	Second PID upper limit	201	301	
FDN	Lower limit output	14	114	Output when the measured value signal falls below **Pr.132 PID lower limit (Pr.1144 Second PID lower limit)**.
FDN2	Second PID lower limit	200	300	
RL	PID forward/reverse rotation output	16	116	"Hi" is output when the output display of the parameter unit is forward rotation (FWD) and "Low" is output when the display is reverse rotation (REV) and stop (STOP).
RL2	Second PID forward/ reverse rotation output	202	302	
PID	During PID control activated	47	147	Turns ON during PID control. When the PID calculation result is not reflected to the output frequency (**Pr.128**< "2000"), the PID signal turns OFF at turn OFF of the start signal. When the PID calculation result is reflected to the output frequency (**Pr.128** ≥ "2000"), the PID signal turns ON regardless of the start signal status during PID calculation.
PID2	Second During PID control activated	203	303	
SLEEP	PID output interruption	70	170	Set **Pr.575 Output interruption detection time (Pr.1147 Second output interruption detection time)** ≠ "9999". This signal turns ON when the PID output suspension function is activated.
SLEEP2	During second PID output shutoff	204	304	

上正科技有限公司
購買、維修、性能測試儀器
電話： 037-466333
Email: service@repair.tw.com
Line id: @222
www.repair.tw.com

NOTE

- Changing the terminal functions with **Pr.178 to Pr.189** and **Pr.190 to Pr.196** may affect other functions. Set parameters after confirming the function of each terminal.

◆ PID automatic switchover control (Pr.127)

- The system can be started up more quickly by starting up without PID control activated.

- When **Pr.127 PID control automatic switchover frequency** is set, the startup is made without PID control until the output frequency reaches the **Pr.127** setting. Once the PID control starts, the PID control is continued even if the output frequency drops to **Pr.127** setting or lower.

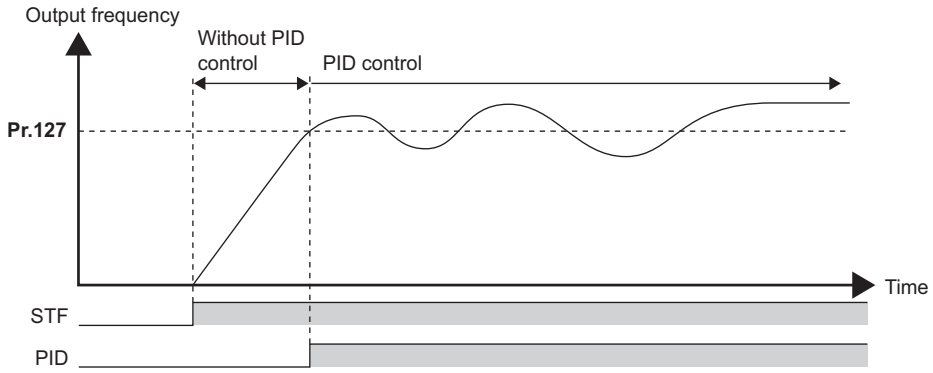

◆ Operation selection and sleep function stop selection when a value error is detected (FUP signal, FDN signal, Y48 signal, Pr.554)

- Using **Pr.554 PID signal operation selection**, set the action when the measured value input exceeds the upper limit (**Pr.131 PID upper limit**) or lower limit (**Pr.132 PID lower limit**), or when the deviation input exceeds the permissible value (**Pr.553 PID deviation limit**).
- Set the time from when the measured value input exceeds the **Pr.131** or **Pr.132** setting until the FUP or FDN signal is output in **Pr.1370 Detection time for PID limiting operation**.
- Set the parameter to select the operation when the FUP/FDN or Y48 signal is output, and the operation when the sleep function is activated.

上正科技有限公司
購買、維修、此手冊零組件
電話： 037-466333
Email: service@repairtw.com
Line id: @2222
www.repairtw.com

Pr.554 setting	Inverter operation		
	At FUP/FDN signal output[*1]	At Y48 signal output[*1]	At sleep operation start
0 (initial value)	Signal output only	Signal output only	Coasts to stop
1	Signal output + output shutoff (E.PID)[*2]		
2	Signal output only	Signal output + output shutoff (E.PID)[*2]	
3	Signal output + output shutoff (E.PID)[*2]		
4	Signal output + deceleration stop (E.PID)[*3]	Signal output only	
5	Signal output + deceleration stop (restart)[*4]		
6	Signal output + deceleration stop (E.PID)[*3]	Signal output + output shutoff (E.PID)[*2]	
7	Signal output + deceleration stop (restart)[*4]		
10	Signal output only	Signal output only	Deceleration stop
11	Signal output + output shutoff (E.PID)[*2]		
12	Signal output only	Signal output + output shutoff (E.PID)[*2]	
13	Signal output + output shutoff (E.PID)[*2]		
14	Signal output + deceleration stop (E.PID)[*3]	Signal output only	
15	Signal output + deceleration stop (restart)[*4]		
16	Signal output + deceleration stop (E.PID)[*3]	Signal output + output shutoff (E.PID)[*2]	
17	Signal output + deceleration stop (restart)[*4]		

*1 When each of **Pr.131, Pr.132** and **Pr.553** settings corresponding to each of the FUP, FDN and Y48 signals is "9999" (no function), signal output and protective function are not available.

*2 At the same time with the signal output, the protective function (E.PID) is activated.

*3 At the same time with the signal output, deceleration is performed using the normal deceleration time. After the deceleration stop, the protective function (E.PID) is activated.

*4 At the same time with the signal output, deceleration is performed using the normal deceleration time. When the measured value returns to normal, operation can be restarted.

◆ PID output suspension function (sleep function) (SLEEP signal, Pr.575 to Pr.577)

- When a status where the output frequency after PID calculation is less than **Pr.576 Output interruption detection level** has continued for the time set in **Pr.575 Output interruption detection time** or longer, inverter running is suspended. This allows the amount of energy consumed in the inefficient low-speed range to be reduced.
- When the deviation (set point - measured value) reaches the PID output shutoff release level (**Pr.577** setting value -1000%) while the PID output suspension function is activated, the PID output suspension function is released, and PID control operation is automatically restarted.
- Whether to allow motor to coast to a stop or perform a deceleration stop when sleep operation is started can be selected using **Pr.554**.
- While the PID output suspension function is activated, the PID output interruption (SLEEP) signal is output. During this time, the Inverter running (RUN) signal turns OFF and the During PID control activated (PID) signal turns ON.
- For the terminal used for the SLEEP signal, set "70 (positive logic)" or "170 (negative logic)" in any of **Pr.190 to Pr.196 (Output terminal function selection)**.

When **Pr.554**="0 to 7", reverse operation (**Pr.128**="10")

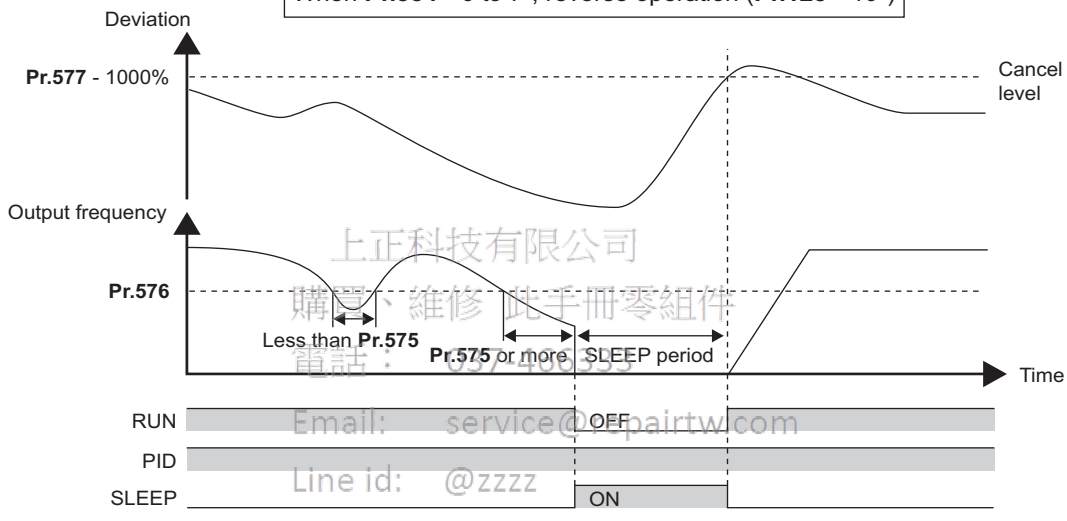

上正科技有限公司
購買、維修 此手冊零組件
電話： 03-4663333
Email: service@repairtw.com
Line id: @zzzz
www.repairtw.com

When **Pr.554**="10 to 17", reverse operation (**Pr.128**="10")

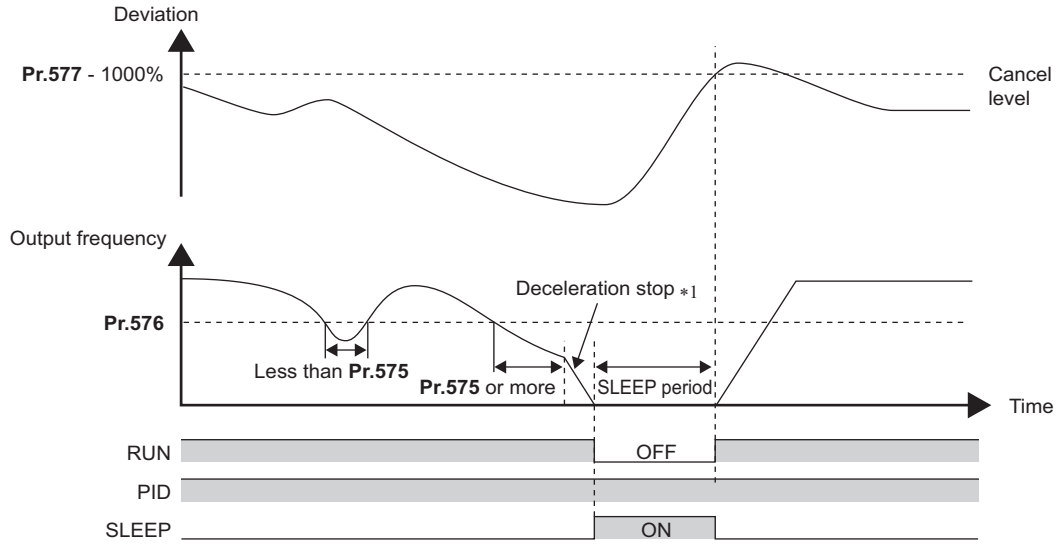

*1 When the PID output shutoff release level is reached during a deceleration stop, output shutoff is released, operation is re-accelerated and PID control is continued. During deceleration, **Pr.576 Output interruption detection level** is invalid.

NOTE

- The stirring function during the PID sleep prevents clogging of the pump while the sleep function is activated. (Refer to page 439.)
- The PID sleep boost function maintains the sleep state for a long period of time. (Refer to page 439.)

◆ Integral stop selection when the frequency is limited (Pr.1015)

- The operation for the integral term can be selected when the frequency or the manipulated amount is limited during PID control. The operation during output suspension can be selected for the integral term using the PID output suspension (sleep) function.
- The manipulation range can be selected.

Pr.1015 setting	Operation at limited frequency	Range of manipulation	Operation during output interruption
0 (initial value)	Integral stop	-100% to +100%	Integral clear
1	Integral continuation		
2	Integral stop	0 to 100%	
10	Integral stop	-100% to +100%	Integral stop
11	Integral continuation		
12	Integral stop	0 to 100%	

NOTE

- While the integral stop is selected, the integral stop is enabled when any of the following conditions is met.

Integral stop conditions
• The frequency reaches the upper or lower limit. • The manipulated amount reaches plus or minus 100% (**Pr.1015** = "0 or 10"). • The manipulated amount reaches 0% or 100% (**Pr.1015** = "2 or 12"). • When a frequency set in **Pr.576 Output interruption detection level** is lower than the minimum frequency, the frequency command value falls down to the level set in **Pr.576** after PID calculation (while the PID output suspension function is enabled).

電話： 037-466333
Email: service@repairtw.com
Line id: @zzzz
www.repairtw.com

◆ PID monitor function

- This function displays the PID control set point, measured value and deviation on the operation panel, and can output these from the terminals FM/CA and AM.
- An integral value indicating a negative % can be displayed on the deviation monitor. 0% is displayed as 1000. (These values cannot be output on the deviation monitor from terminals FM and CA.)

- Set the following values to **Pr.52 Operation panel main monitor selection, Pr.774 to Pr.776 (Operation panel monitor selection), Pr.992 Operation panel setting dial push monitor selection, Pr.54 FM/CA terminal function selection and Pr.158 AM terminal function selection** for each monitor.

Parameter Setting	Monitor description	Minimum increment	Monitor range			Remarks
			Terminal FM/CA	Terminal AM	Operation panel	
52	PID set point	0.1%	0 to 100%*1			"0" is displayed at all times when PID control is based in deviation input.
92	Second PID set point/deviation input selection					
53	PID measured value	0.1%	0 to 100%*1			
93	Second PID measured value					
67	PID measured value 2	0.1%	0 to 100%*1			Displays PID measured value even if the PID control operating conditions are not satisfied while the PID control is enabled. "0" is displayed at all times when PID control is based in deviation input.
95	Second PID measured value 2					
54	PID deviation	0.1%	Setting not available	-100% to 100%*1*2	900% to 1100% or -100% to 100%*1	Using **Pr.290 Monitor negative output selection**, negative values can be output to the terminal AM and displayed with a minus sign on the operation panel (FR-DU08). When signed indication is invalid, the indicated values are from "900%" to "1100%" on the operation panel. (0% is offset and displayed as "1000%".)
94	Second PID deviation					
91	PID manipulated amount	0.1%	Setting not available	-100% to 100%*2	900% to 1100% or -100% to 100%	
96	Second PID manipulated amount					

*1 When **C42(Pr.934) and C44(Pr.935)** are set, the minimum increment changes from unit % to no unit, and the monitor range can be changed. (Refer to page 423.)

*2 When the minus value display is set disabled using **Pr.290**, the terminal AM output becomes "0".

上正科技有限公司
購買、維修 此手冊零組件
電話： 037-466333
Email: service@repairtw.com
Line id: @zzzz
www.repairtw.com

◆ Adjustment procedure

Enable PID control	When **Pr.128** ≠ "0", PID control is enabled. Set the set point, measured value and deviation input methods at **Pr.128, Pr.609** and **Pr.610**.
Setting the parameter	Adjust the PID control parameters of **Pr.127, Pr.129 to Pr.134, Pr.553, Pr.554, Pr.575 to Pr.577**.
PID gain tuning	**Pr.129, Pr.130** and **Pr.134** are adjusted automatically by PID gain tuning. (Refer to page 417.)
Terminal setting	Set the I/O terminals for PID control. (**Pr.178 to Pr.189 (Input terminal function selection), Pr.190 to Pr.196 (Output terminal function selection)**)
Turn the X14 signal ON	When the X14 signal is assigned to the input terminal, PID control is enabled by the X14 signal turning ON.
Operation	

◆ Calibration example

(Adjust room temperature to 25°C by PID control using a detector that outputs 4 mA at 0°C and 20 mA at 50°C.)

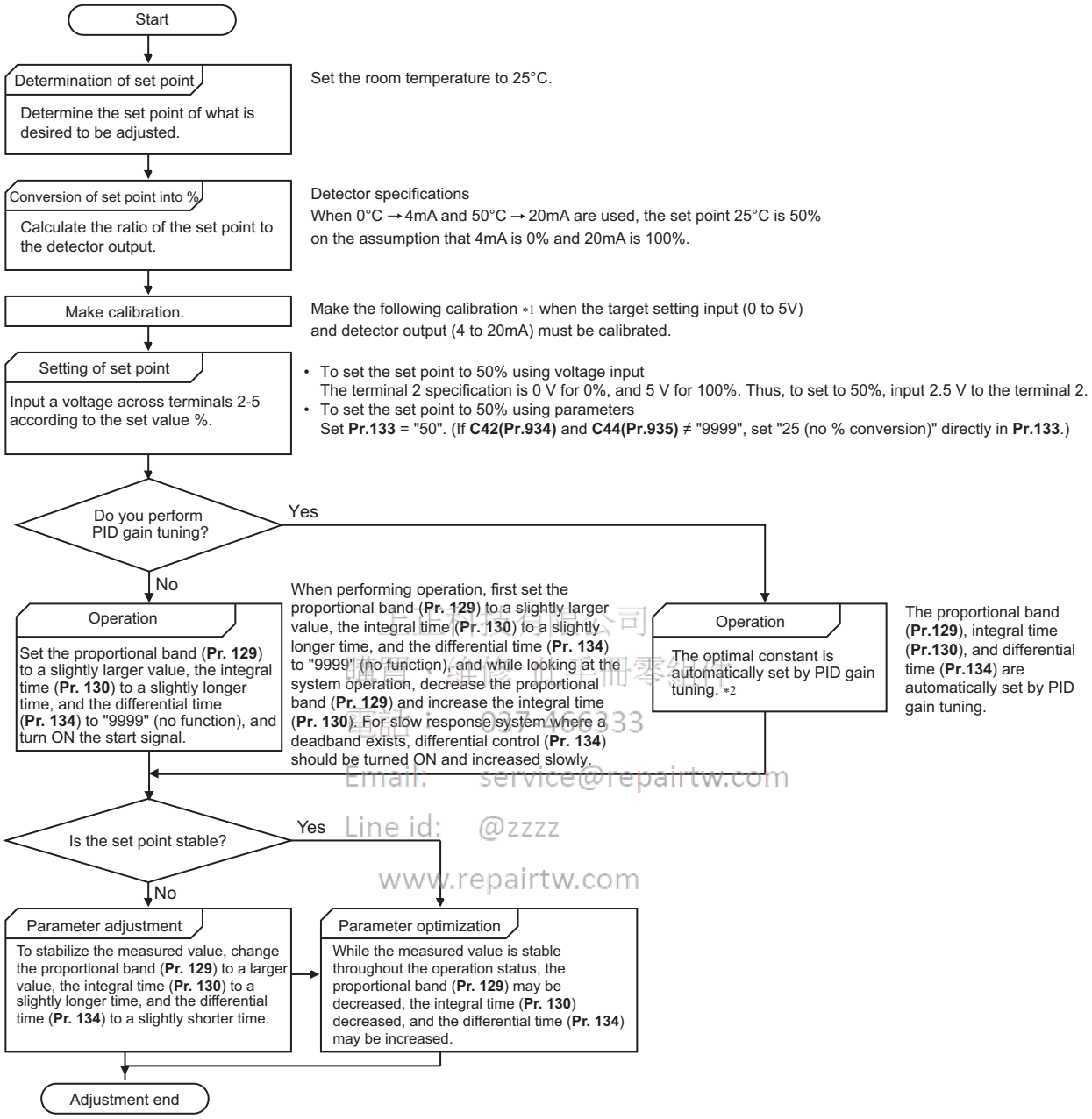

Email: service@repairtw.com
Line id: @zzzz
www.repairtw.com

*1 When calibration is required
Calibrate detector output and set point input by **Pr.125, C2 (Pr.902) to C4 (Pr.903)** (terminal 2) or **Pr.126, C5 (Pr.904) to C7 (Pr.905)** (terminal 4). (Refer to page 339.)
When both **C42 (Pr.934)** and **C44 (Pr.935)** are other than "9999", calibrate the detector output and set point input by **Pr.934** and **Pr.935**. (Refer to page 423.)
Make calibration in the PU operation mode during an inverter stop.

*2 For details about PID gain tuning, refer to page 417.

- Calibrating set point input
  (Example: To enter the set point on terminal 2)

1. 1. Apply the input (for example, 0 V) of set point setting 0% across terminals 2 and 5.
2. Using **C2 (Pr.902)**, enter the frequency (for example, 0 Hz) to be output by the inverter when the deviation is 0%.
3. Using **C3 (Pr.902)**, set the voltage value at 0%.
4. Apply the input (for example, 5 V) of set point setting 100% across terminals 2 and 5.
5. Using **Pr.125**, enter the frequency (for example, 60 Hz) to be output by the inverter when the deviation is 100%.
6. Using **C4 (Pr.903)**, set the voltage value at 100%.

NOTE

- When the set point is set at **Pr.133**, the setting frequency of **C2 (Pr.902)** is equivalent to 0% and the setting frequency of **Pr.125 (Pr.903)** is equivalent to 100%.

5

- Measured value input calibration

1. Apply the input (for example, 4 mA) of measured value 0% across terminals 4 and 5.
2. Perform calibration by **C6 (Pr.904)**.
3. Apply the input (for example, 20 mA) of measured value 100% across terminals 4 and 5.
4. Perform calibration by **C7 (Pr.905)**.

NOTE

- Set the frequencies set at **C5 (Pr.904) and Pr.126** to each of the same values set at **C2 (Pr.902) and Pr.125**.
- The display unit for analog input can be changed from "%" to "V" or "mA". (Refer to page 341.)

上正科技有限公司
購買、維修、此手冊零組件
電話： 037-466333
Email: service@repairtw.com
Line id: @2222
www.repairtw.com

- The following figure shows the results of having performed the calibration above.

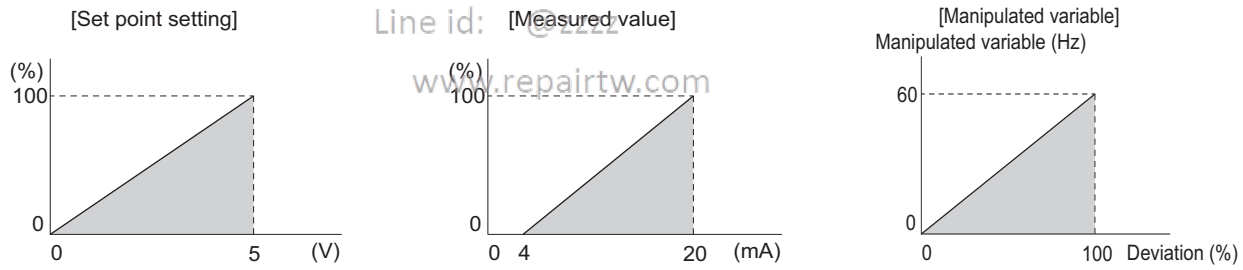

◆ Setting multiple PID functions

- When the second PID function is set, two sets of PID functions can be switched for use. The PID setting is selected as shown in the following table.

Pr.128 setting (First PID setting)	Pr.753 setting (Second PID setting)	Pr.155 setting*1	RT signal	PID setting applied to the output frequency
"0" or not applied to the frequency	"0" or not applied to the frequency	—	—	Control other than PID control
"0" or not applied to the frequency	Applied to the frequency	—	—	Second PID setting
Applied to the frequency	"0" or not applied to the frequency	—	—	First PID setting
Applied to the frequency	Applied to the frequency	0	OFF	First PID setting
			ON	Second PID setting
		10	—	First PID setting

*1 **While Pr.155** = "0", the second function is enabled immediately after the RT signal turns ON. While **Pr.155** = "10", the second function is enabled only during constant speed operation when the RT signal turns ON. (For the details, refer to page 358.)

- The parameters and signals for the second PID function are in the same way as the following parameters and signals of the first PID function. Refer to the first PID function when setting the second PID functions.

Classification	First PID function parameters		Second PID function parameters	
	Pr.	Name	Pr.	Name
Parameter	127	PID control automatic switchover frequency	754	Second PID control automatic switchover frequency
	128	PID action selection	753	Second PID action selection
	129	PID proportional band	756	Second PID proportional band
	130	PID integral time	757	Second PID integral time
	131	PID upper limit	1143	Second PID upper limit
	132	PID lower limit	1144	Second PID lower limit
	133	PID action set point	755	Second PID action set point
	134	PID differential time	758	Second PID differential time
	553	PID deviation limit	1145	Second PID deviation limit
	554	PID signal operation selection	1146	Second PID signal operation selection
	575	Output interruption detection time	1147	Second output interruption detection time
	576	Output interruption detection level	1148	Second output interruption detection level
	577	Output interruption cancel level	1149	Second output interruption cancel level
	609	PID set point/deviation input selection	1140	Second PID set point/deviation input selection
	610	PID measured value input selection	1141	Second PID measured value input selection

Classification	First PID function parameters		Second PID function parameters	
	Signal	Name	Signal	Name
Input signal	X14	PID control valid	X80	Second PID control valid
	X64	PID forward/reverse action switchover	X79	Second PID forward/reverse action switchover
	X72	PID P control switchover	X73	Second PID P control switchover
Output signal	FUP	PID upper limit	FUP2	Second PID upper limit
	FDN	PID lower limit	FDN2	Second PID lower limit
	RL	PID forward/reverse rotation output	RL2	Second PID forward/reverse rotation output
	PID	During PID control activated	PID2	Second During PID control activated
	SLEEP	PID output interruption	SLEEP2	During second PID output shutoff
	Y48	PID deviation limit	Y205	Second PID deviation limit

上禾科技有限公司
購買、維修 此手冊零組件
電話：037-466331
Email service@repairtw.com
Line id: @zzzz
www.repairtw.com

NOTE

- Even if the X14 signal is ON, PID control is stopped and multi-speed or JOG operation is performed when the multi-speed operation (RH, RM, RL, or REX) signal or JOG signal (JOG operation) is input.
- PID control is invalid under the following settings.
  Pr.79 Operation mode selection = "6" (Switchover mode)
- Note that input to the terminal 1 is added to the terminals 2 and 4 inputs. For example when **Pr.128** = "20 or 21", the terminal 1 input is considered as a set point and added to the set point of the terminal 2.
- To use terminal 4 and 1 inputs in PID control, set "0" (initial value) to **Pr.858 Terminal 4 function assignment** and **Pr.868 Terminal 1 function assignment**. When a value other than "0", PID control is invalid.
- Changing the terminal functions with **Pr.178 to Pr.189 and Pr.190 to Pr.196** may affect other functions. Set parameters after confirming the function of each terminal.
- When PID control is selected, the minimum frequency becomes the frequency of **Pr.902** and the maximum frequency becomes the frequency of **Pr.903**.
  (The **Pr.1 Maximum frequency and Pr.2 Minimum frequency** settings also are valid.)
- During PID operation, the remote operation function is invalid.
- When control is switched to PID control during normal operation, the frequency during that operation is not carried over, and the value resulting from PID calculation referenced to 0 Hz becomes the command frequency.

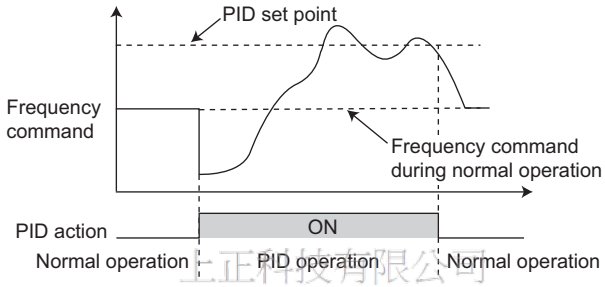

Operation when control is switched to PID control during normal operation

上正科技有限公司
購買、維修 此手冊零組件
電話： 037-466333
Email: service@repairtw.com
www.repairtw.com

Parameters referred to

Pr.59 Remote function selection ☞ page 222
Pr.73 Analog input selection ☞ page 330
Pr.79 Operation mode selection ☞ page 228
Pr.178 to Pr.189 (Input terminal function selection) ☞ page 355
Pr.190 to Pr.196 (Output terminal function selection) ☞ page 312
Pr.290 Monitor negative output selection ☞ page 297
C2 (Pr.902) to C7 (Pr.905) Frequency setting voltage (current) bias/gain ☞ page 339

5.11.7 PID gain tuning

Changing the PID control manipulated amount and measuring the PID control response enable automatic setting of the constant optimal for PID control.

For tuning, use the step response method or the limit cycle method.

Pr.	Name	Initial value	Setting range	Description
1211 A690	**PID gain tuning timeout time**	100 s	1 to 9999 s	Set the time after the PID gain tuning starts until a timeout error occurs.
1212 A691	**Step manipulated amount**	1000%	900 to 1100%	Set the step manipulated amount when using the step response method to perform the PID gain tuning.
1213 A692	**Step responding sampling cycle**	1 s	0.01 to 600 s	Set the cycle for sampling of measurement values when using the step response method to perform the PID gain tuning.
1214 A693	**Timeout time after the maximum slope**	10 s	1 to 9999 s	Set the time after the measurement of the maximum slope until the completion of the tuning when using the step response method to perform the PID gain tuning.
1215 A694	**Limit cycle output upper limit**	1100%	900 to 1100%	Set the upper limit value of the two-position output when using the limit cycle method to perform the PID gain tuning.
1216 A695	**Limit cycle output lower limit**	1000%	900 to 1100%	Set the lower limit value of the two-position output when using the limit cycle method to perform the PID gain tuning.
1217 A696	**Limit cycle hysteresis**	1%	0.1 to 10%	Set the hysteresis of the set point when using the limit cycle method to perform the PID gain tuning.
1218 A697	**PID gain tuning setting**	0	0, 100 to 102, 111, 112, 121, 122, 200 to 202, 211, 212, 221, 222	Select the target loop, method, and control adjustment method for the PID gain tuning.
1219 A698	**PID gain tuning start/status**	0	0	PID gain tuning function disabled
			1	PID gain tuning start
			2	During PID gain tuning (read only)
			8	PID gain tuning forced end
			9, 90 to 96	Tuning error (read only)

上正科技有限公司
購買、維修、更換手冊零組件
電話： 037-466333
Email: service@repairtw.com
Line id: @zzzz
www.repairtw.com

◆ Step response method

- In the step response method, the manipulated amount is changed step by step for the real system. From the change in the measured values, the maximum slope (R) and the equivalent waste time (L) are calculated to determine each constant.

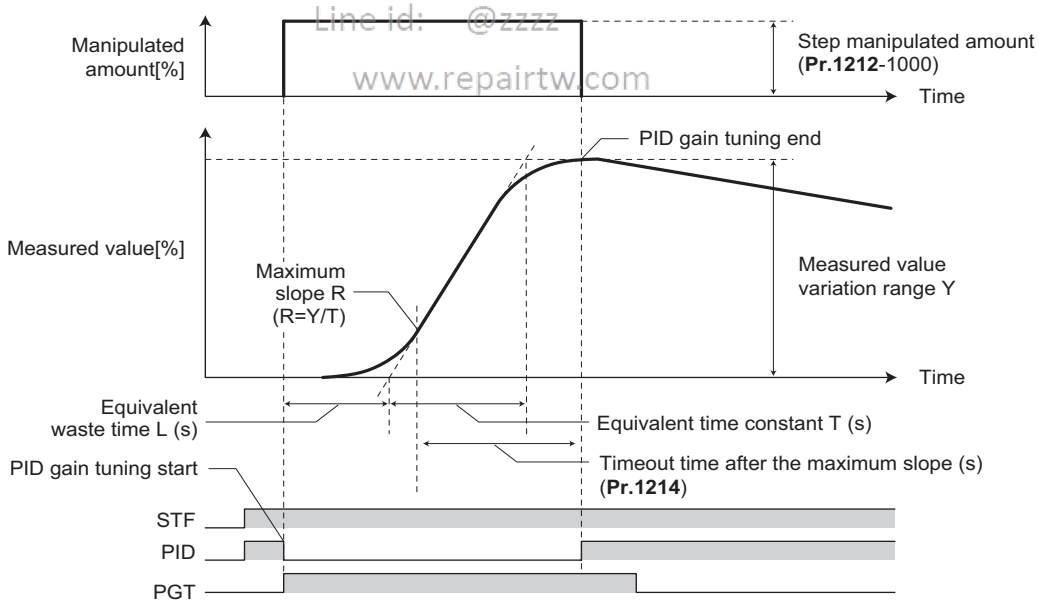

- The step manipulated amount (**Pr.1212** - 1000) is added to the present manipulated amount.
- The measured value is taken for every sampling cycle (**Pr.1213**). From the variation between the measured values (Y) and the time (t), the maximum slope (R) is calculated.
- The measurement ends when the timeout time (**Pr.1214**) elapsed after the maximum slope is obtained.
- After the integral term is cleared, PID control is performed with the constant to which the change has been applied (the constant used before PID gain tuning when a fault occurs).

◆ Limit cycle method

- In the limit cycle method, the two-position ON/OFF operation is performed three times for output of the manipulated amount for the real system. From the vibration waveform data of the measured values, the vibration amplitude (Xc) and the vibration cycle (Tc) are measured. Based on the measured values, each constant is determined.
- In the limit cycle method, less influence of the noise of the measured values is given as compared in the step response method, and a stable tuning result can be obtained.

Example: Measured value ≤ set point (reverse action)

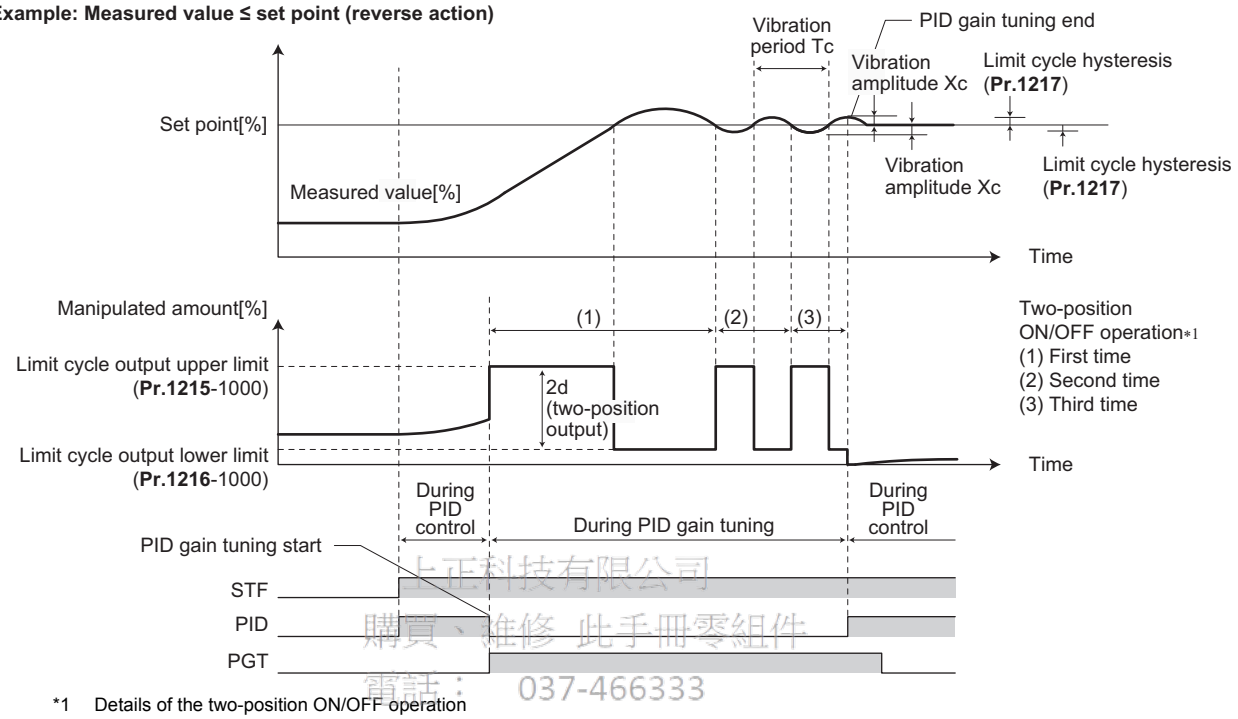

*1 Details of the two-position ON/OFF operation

上正科技有限公司
購買、維修 此手冊零組件
電話： 037-466333
Email: service@repairtw.com
Line id: @2222
www.repairtw.com

PID control operation	Initial output of the manipulated amount	Two-position ON/OFF operation
Reverse action	When measured value ≤ set point Manipulated amount = Upper limit of the output (**Pr.1215** - 1000) When measured value > set point Manipulated amount = Lower limit of the output (**Pr.1216** - 1000)	Using measured value ≥ set point + hysteresis (**Pr.1217**) Manipulated amount = Lower limit of the output (**Pr.1216** - 1000) Using measured value ≤ set point - hysteresis (**Pr.1217**) Manipulated amount = Upper limit of the output (**Pr.1215** - 1000)
Forward action	When measured value ≤ set point Manipulated amount = Lower limit of the output (**Pr.1216** - 1000) When measured value > set point Manipulated amount = Upper limit of the output (**Pr.1215** - 1000)	Using measured value ≥ set point + hysteresis (**Pr.1217**) Manipulated amount = Upper limit of the output (**Pr.1215** - 1000) Using measured value ≤ set point - hysteresis (**Pr.1217**) Manipulated amount = Lower limit of the output (**Pr.1216** - 1000)

- The manipulated amount is output at the limit cycle output upper limit (**Pr.1215** - 1000). (When the measured value is higher than the set point, the manipulated amount is once output at the limit cycle lower limit (**Pr.1216** - 1000), and then after the set point exceeds the measured value, the manipulated amount is output at the limit cycle output upper limit (**Pr.1215** - 1000).)
- The two-position ON/OFF operation is repeated three times. From the waveform data of the values measured for output of the second and third two-position operation, the vibration amplitude (Xc) and the vibration cycle (Tc) are measured.
- From the vibration amplitude (Xc) and the vibration cycle (Tc), the threshold sensitivity (Ku) and the threshold cycle (Tu) are calculated.
- Each constant is calculated using a formula depending on the **Pr.1218** setting, and PID gain tuning is finished.
- After the integral term is cleared, PID control is performed with the constant to which the change has been applied (the constant used before PID gain tuning when a fault occurs).

NOTE

- Confirm that the measured values are stable when performing PID gain tuning with the step response method. When the measured values are unstable, the tuning result may not be accurate.
- Accurate measurement of the maximum slope may not be achieved if the **Pr.1213** setting is small in the step response method.

◆ PID gain tuning operation setting (Pr.1218)

- Set the PID gain tuning operation in this parameter. The digit in the hundreds place represents the PID loop. The digit in the tens place represents the tuning method. The digit in the ones place represents the control adjustment method.

Pr.1218 setting	PID loop	Tuning method	Control adjustment method
0 (initial value)	PID gain tuning function disabled		
100	First PID	Step response method	P control adjustment
101			PI control adjustment
102			PID control adjustment
111		Limit cycle method (set-point control)	PI control adjustment
112			PID control adjustment
121		Limit cycle method (follow-up control)	PI control adjustment
122			PID control adjustment
200	Second PID	Step response method	P control adjustment
201			PI control adjustment
202			PID control adjustment
211		Limit cycle method (set-point control)	PI control adjustment
212			PID control adjustment
221		Limit cycle method (follow-up control)	PI control adjustment
222			PID control adjustment

上正科技有限公司
購買、維修 此手冊零組件
電話： 037-466333
Email: service@repairtw.com
Line ID: @0377
www.repairtw.com

◆ Parameter setting for each PID gain tuning method

- Set the following parameters according to the selected tuning method (step response method / limit cycle method).

Pr.	Tuning method		Item	Description
	Step response method	Limit cycle method		
128 (753)	○	○	PID action selection	Select the PID action.
1218	○	○	PID gain tuning setting	Select the PID gain tuning operation.
1211	○	○	PID gain tuning timeout time	Set the timeout time for PID gain tuning. A timeout error occurs when the elapsed time exceeds the setting.
1212	○	—	Step manipulated amount	Set the step manipulated amount for PID gain tuning.
1213	○	—	Step response sampling cycle	Set the cycle for sampling of measurement values for PID gain tuning.
1214	○	—	Timeout time after the maximum slope	Set the timeout time after the maximum slope measurement for PID gain tuning. The measurement for tuning is completed when the elapsed time exceeds the setting.
1215	—	○	Limit cycle output upper limit	Set the upper limit value of the two-position output for PID gain tuning.
1216	—	○	Limit cycle output lower limit	Set the lower limit value of the two-position output for PID gain tuning. (When the setting is the **Pr.1215** setting or higher, a tuning error occurs.)
1217	—	○	Limit cycle hysteresis	Set the hysteresis of the set point for PID gain tuning.

○: Parameter to set

◆ Execution of PID gain tuning (Pr.1219, PGT signal)

- While the PID gain tuning function is enabled (**Pr.1218** ≠ "0"), PID gain tuning is started when any of the following operations is performed during PID control.
  Turn ON the PID gain tuning start/forced end (PGT) signal.
  Set **Pr.1219 PID gain tuning start/status** = "1".
  Selecting the PID gain tuning start (1.RUN) in the function menu on the operation panel (FR-DU08).

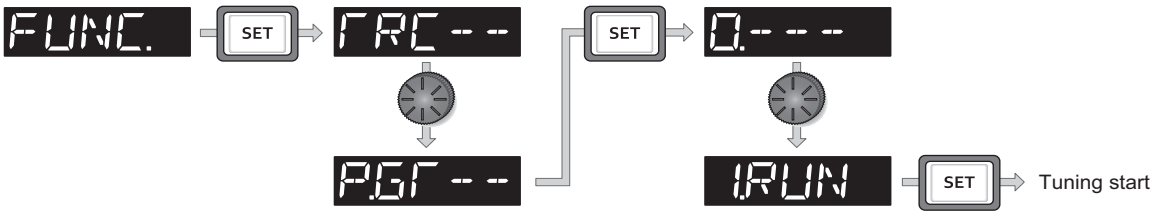

- To use the PGT signal, set "81" in any of **Pr.178 to Pr.189 (Input terminal function selection)** to assign the function to an input terminal.
- The PID gain tuning status can be checked with the read value of **Pr.1219** or the PID gain tuning status monitor. The PID gain tuning status monitor is displayed instead of the output voltage monitor.

Status monitor	PID gain tuning status
2	Tuning in progress
3	Tuning completed
8	Tuning forced end

- When PID gain tuning is completed, the following parameters are automatically set.

Pr.	Name	Step response method			Limit cycle method	
		P control	PI control	PID control	PI control	PID control
129 (756)	PID proportional band	○	○	○	○	○
130 (757)	PID integral time	—	○	○	○	○
134 (758)	PID differential time	—	—	○	—	○

○: The calculation result is applied. —: "9999" is set.

上正科技有限公司
購買、維修此手冊零組件
電話： 037-466333
Email: service@repairtw.com
Line id: @zzzz
www.repairtw.com

- To forcibly terminate the tuning during PID gain tuning, perform any of the following operations.
  Turn OFF the PID gain tuning start/forced end (PGT) signal.
  Set **Pr.1219 PID gain tuning start/status** = "8".
  Select the PID gain tuning forced end (8.END) in the function menu on the operation panel (FR-DU08).
  Turn OFF the power supply, reset the inverter, or turn OFF the start command.

NOTE

- By PID gain tuning, the settings of the PID constant parameters (**Pr.129, Pr.130, Pr.134, Pr.756 to Pr.758**) are automatically changed. Before performing PID gain tuning, record the PID constant parameter settings before tuning as required.
- PID gain tuning also requires setting of the PID upper limit (**Pr.131** or **Pr.1143**), PID lower limit (**Pr.132** or **Pr.1144**), PID deviation limit (**Pr.553** or **Pr.1145**).
- Changing the terminal assignment with **Pr.178 to Pr.189** may affect other functions. Set parameters after confirming the function of each terminal.
- By PID gain tuning, the amount of operation is changed considerably. In some applications such as a winding machine, materials may be affected.

◆ PID gain tuning error

- When the read value of **Pr.1219** or the PID gain tuning status monitor display is "9, 90 to 96", tuning has not been properly completed due to a tuning error. Remove the cause of the tuning error, and perform tuning again.

Monitor value	Error description	Cause of tuning error	Corrective action for error
9	Termination of tuning due to activation of an inverter protective function	An inverter protective function is activated.	Remedy the cause. (Refer to page 568.)
90	Input upper limit error	The measured value is higher than the PID upper limit (**Pr.131** or **Pr.1143**).	Change the **Pr.131** or **Pr.1143** setting as appropriate.
91	Input lower limit error	The measured value is lower than the PID lower limit (**Pr.132** or **Pr.1144**).	Change the **Pr.132** or **Pr.1144** setting as appropriate.
92	Deviation limit error	The deviation exceeded the PID deviation limit (**Pr.553** or **Pr.1145**).	Change the **Pr.553** or **Pr.1145** setting as appropriate.
93	Timeout error	Tuning is not terminated within the time set in **Pr.1211** after the start of PID gain tuning.	Change the **Pr.1211** setting as appropriate.
94	Calculation error	The tuning calculation is inconsistent.	In the step response method, change the **Pr.1212** and **Pr.1213** settings as appropriate. In the limit cycle method, change the **Pr.1217** setting as appropriate.
95	Setting error	• PID control is disabled during tuning. • The PID control setting has been changed during tuning. • In the limit cycle method, the **Pr.1215** setting is equal to or lower than the **Pr.1216** setting.	• Enable PID control. • Change the **Pr.1215** and **Pr.1216** settings as appropriate.
96	PID mode error	• PID gain tuning has been started during automatic switchover or pre-charge operation. • A stall prevention or regeneration avoidance operation occurred during PID gain tuning. • A condition for output shutoff by the sleep function was satisfied during PID gain tuning. • Frequency fluctuation occurred because of the frequency jump, maximum frequency, or minimum frequency during PID gain tuning.	Change the setting of each function as appropriate.

上環科技有限公司
購買、維修、此產品
電話：
Email: service@repairhk.com
Line Id: @2222
www.repairhk.com

◆ Fine adjustment after PID gain tuning

- If fine adjustment is required after completion of PID gain tuning, adjust the proportional band (**Pr.129** or **Pr.756**), integral time (**Pr.130** or **Pr.757**), and differential time (**Pr.134** or **Pr.758**).

Status of measurement values	Adjustment method
The response is fast, but vibrations are observed. 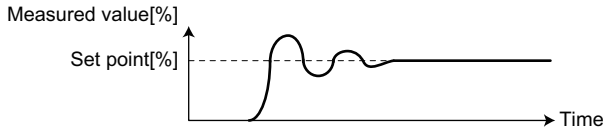 	• Increase the proportional band (**Pr.129** or **Pr.756**). (Smaller proportional effect) • Increase the integral time (**Pr.130** or **Pr.757**). (Smaller integral effect)
Optimal 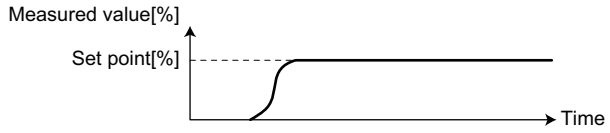 	—
Response is slow. 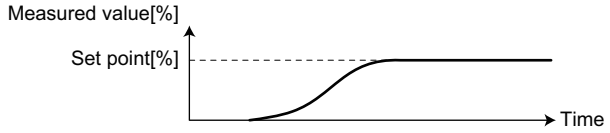 	• Decrease the proportional band (**Pr.129** or **Pr.756**). (Larger proportional effect) • Decrease the integral time (**Pr.130** or **Pr.757**). (Larger integral effect)

NOTE

- When the differential operation is used, adjust the differential time (**Pr.134** or **Pr.758**) while checking the stability and the response. (Increasing the differential time makes the differential effect larger, and decreasing the differential time makes the differential effect smaller.)

5.11.8 Changing the display increment of numerical values used in PID control

When the LCD operation panel (FR-LU08) or the parameter unit (FR-PU07) is used, the display unit of parameters and monitor items related to PID control can be changed to various units.

Pr.	Name	Initial value	Setting range	Description	
759 **A600**	**PID unit selection**	0	0 to 43	Change the unit of the PID control-related values that is displayed on the LCD operation panel (FR-LU08) or the parameter unit (FR-PU07).	
			9999	Without display unit switching	
C42(934) **A630**[*1]	**PID display bias coefficient**	9999	0 to 500	Set the coefficient of the bias side (minimum) of measured value input.	
			9999	Displayed in %.	
C43(934) **A631**[*1]	**PID display bias analog value**	20%	0 to 300%	Set the converted % of the bias side (minimum) current/voltage of measured value input.	
C44(935) **A632**[*1]	**PID display gain coefficient**	9999	0 to 500	Set the coefficient of the gain side (maximum) of measured value input.	
			9999	Displayed in %.	
C45(935) **A633**[*1]	**PID display gain analog value**	100%	0 to 300%	Set the converted % of the gain side (maximum) current/voltage of measured value input.	
1136 **A670**	**Second PID display bias coefficient**	9999	0 to 500 9999	Refer to **C42(934)**.	Second PID control
1137 **A671**	**Second PID display bias analog value**	20%	0 to 300%	Refer to **C43(934)**.	
1138 **A672**	**Second PID display gain coefficient**	9999	0 to 500 9999	Refer to **C44(935)**.	
1139 **A673**	**Second PID display gain analog value**	100%	0 to 300%	Refer to **C45(935)**.	
1142 **A640**	**Second PID unit selection**	9999	0 to 43, 9999	Refer to **Pr.759**.	

*1 The parameter number in parentheses is the one for use with the LCD operation panel and the parameter unit.

上正科技有限公司
購買、維修 此手冊零組件
電話： 037-466333
Email: service@repairtw.com
Line ID: @ccd
www.repairtw.com

◆ Calibration of PID display bias and gain (C42 (Pr.934) to C45 (Pr.935))

- When both **C42 (Pr.934) and C44 (Pr.935)** ≠ "9999", the bias and gain values for the set point, measured value and deviation in PID control can be calibrated.
- "Bias"/"gain" function can adjust the relation between PID displayed coefficient and measured value input signal that is externally input. Examples of these measured value input signals are 0 to 5 VDC, 0 to 10 VDC, or 4 to 20 mADC. (The terminals used for measured value input can be selected at **Pr.128, Pr.609, Pr.610**.)
- Set the value that is displayed when the PID measured value (control amount) is 0% to **C42 (Pr.934)** and the value that is displayed when the PID measured value (control amount) is 100% to **C44 (Pr.935)**.
- When both of **C42 (Pr.934) and C44 (Pr.935)** ≠"9999" and **Pr.133** is set as the set point, the setting of **C42 (Pr.934)** is treated as 0%, and **C44 (Pr.935)** as 100%.

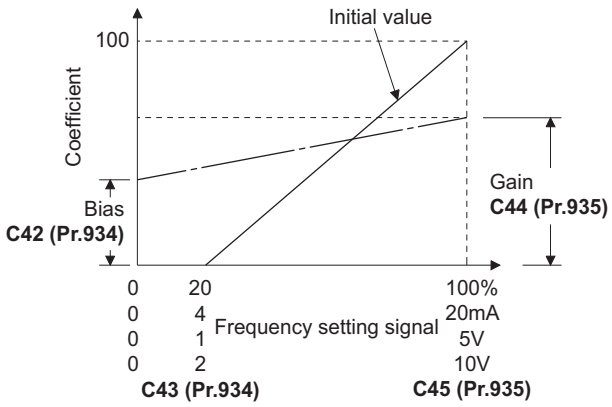

- There are three methods to adjust the PID display bias/gain.
  Method to adjust any point by application of a current (voltage) to the measured value input terminal
  Method to adjust any point without application of a current (voltage) to the measured value input terminal
  Method to adjust only the display coefficient without adjustment of current (voltage)

(Refer to page 339 for details, and make the necessary adjustments by considering **C7 (Pr.905)** as **C45 (Pr.935) and Pr.126** as **C44 (Pr.935)**.)

NOTE

- Always calibrate the input after changing the voltage/current input specification with **Pr.73 and Pr.267**, and the voltage/current input selection switch.

- Take caution when the following condition is satisfied because the inverter recognizes the deviation value as a negative (positive) value even though a positive (negative) deviation is given: **Pr.934** (PID bias coefficient) > **Pr.935** (PID gain coefficient).
  To perform a reverse action, set **Pr.128 PID action selection** to forward action. Alternatively, to perform a forward action, set **Pr.128** to reverse action. In this case, the PID output shutoff release level is (1000 - **Pr.577**).

Pr.934 < Pr.935 (normal setting)		Pr.934 ≥ Pr.935	
Reverse action	Reverse action setting to **Pr.128**	Reverse action	Forward action setting to **Pr.128**
Forward action	Forward action setting to **Pr.128**	Forward action	Reverse action setting to **Pr.128**
PID output shutoff release level	**Pr.577** - 1000	PID output shutoff release level	1000 - **Pr.577**

(Example) Set the following: **Pr.934** = "500" or 20% (4 mA is applied), **Pr.935** = "100" or 100% (20 mA is applied).
When the set point = 400 and the measured value = 360, the deviation is +40 (>0), but the inverter recognizes the deviation as -10% (<0). Because of this, operation amount does not increase in the reverse operation setting.
The operation amount increases when the forward operation is set.
To perform PID output shutoff release at deviation of +40 or higher, set **Pr.577** = "960".

上正科技有限公司
購買、維修 此手冊零組件
電話： 037-466333
Email: service@repairtw.com
Line Id: @zzzz
www.repairtw.com

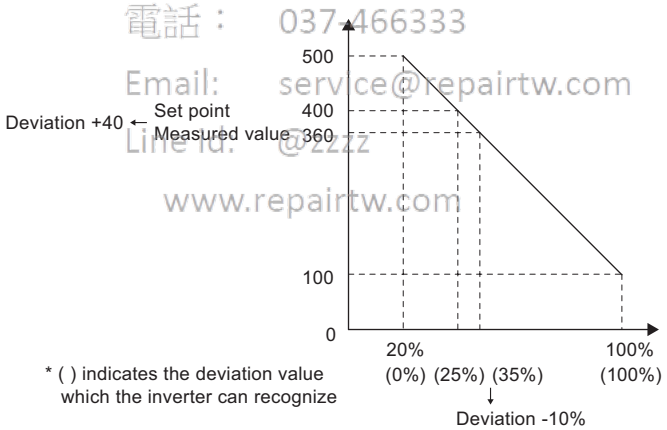

- The display of the following parameters is changed according to the **C42 (Pr.934), C44 (Pr.935), Pr.1136, and Pr1138** settings.

Pr.	Name
131	PID upper limit
132	PID lower limit
133	PID action set point
553	PID deviation limit
577	Output interruption cancel level
761	Pre-charge ending level
763	Pre-charge upper detection level

Pr.	Name
1143	Second PID upper limit
1144	Second PID lower limit
755	Second PID action set point
1145	Second PID deviation limit
1149	Second output interruption cancel level
766	Second pre-charge ending level
768	Second pre-charge upper detection level

◆ Changing the PID display coefficient of the LCD operation panel (FR-LU08) or the parameter unit (FR-PU07) (Pr.759)

- Use **Pr.759 PID unit selection** to change the unit of the displayed value on the FR-LU08 or the FR-PU07. For the coefficient set in **C42 (Pr.934) to C44 (Pr.935)**, the units can be changed as follows.

Pr.759 setting	Unit indication	Unit name
9999	%	%
0	—	(No indication)
1	K	Kelvin
2	C	Degree Celsius
3	F	Degree Fahrenheit
4	PSI	Pound-force per Square Inch
5	MPa	Mega Pascal
6	kPa	Kilo Pascal
7	Pa	Pascal
8	bar	Bar
9	mbr	Millibar
10	GPH	Gallon per Hour
11	GPM	Gallon per Minute
12	GPS	Gallon per Second
13	L/H	Liter per Hour
14	L/M	Liter per Minute
15	L/S	Liter per Second
16	CFH	Cubic Feet per Hour
17	CFM	Cubic Feet per Minute
18	CFS	Cubic Feet per Second
19	CMH	Cubic Meter per Hour
20	CMM	Cubic Meter per Minute

Pr.759 setting	Unit indication	Unit name
21	CMS	Cubic Meter per Second
22	ftM	Feet per Minute
23	ftS	Feet per Second
24	m/M	Meter per Minute
25	m/S	Meter per Second
26	lbH	Pound per Hour
27	lbM	Pound per Minute
28	lbS	Pound per Second
29	iWC	Inch Water Column
30	iWG	Inch Water Gauge
31	fWG	Feet of Water Gauge
32	mWG	Meter of Water Gauge
33	iHg	Inches of Mercury
34	mHg	Millimeters of Mercury
35	kgH	Kilogram per Hour
36	kgM	Kilogram per Minute
37	kgS	Kilogram per Second
38	ppm	Pulse per Minute
39	pps	Pulse per Second
40	kW	Kilowatt
41	hp	Horse Power
42	Hz	Hertz
43	rpm	Revolution per Minute

5.11.9 PID Pre-charge function

上正科技有限公司
購買、維修 此手冊零組件
電話: 037-406333
Email: service@repairtw.com
Line id: @zzzz
www.repairtw.com

This function drives the motor at a certain speed before starting PID control. This function is useful for a pump with a long hose, since PID control would start before the pump is filled with water, and proper control would not be performed without this function,

Pr.	Name	Initial value	Setting range	Description	
760 A616	**Pre-charge fault selection**	0	0	Fault indication with output shutoff immediately after pre-charge fault occurs.	
			1	Fault indication with deceleration stop after pre-charge fault occurs.	
761 A617	**Pre-charge ending level**	9999	0 to 100%	Set the measured amount to end the pre-charge operation.	
			9999	Without pre-charge ending level	
762 A618	**Pre-charge ending time**	9999	0 to 3600 s	Set the time to end the pre-charge operation.	
			9999	Without pre-charge ending time	
763 A619	**Pre-charge upper detection level**	9999	0 to 100%	Set the upper limit for the pre-charged amount. A pre-charge fault occurs when the measured value exceeds the setting during pre-charging.	
			9999	Without Pre-charge upper detection level	
764 A620	**Pre-charge time limit**	9999	0 to 3600 s	Set the time limit for the pre-charged amount. A pre-charge fault occurs when the pre-charge time exceeds the setting.	
			9999	Without Pre-charge time limit	
1132 A626	**Pre-charge change increment amount**	9999	0 to 100%	Set the change increment amount per second after the automatic switchover frequency is reached. (for vertical pumps).	
			9999	Constant-speed operation after the automatic switchover frequency is reached (for horizontal pumps).	
765 A656	**Second pre-charge fault selection**	0	0, 1	Refer to **Pr.760**.	Set the second pre-charge function. The second pre-charge function is valid when the RT signal is ON.
766 A657	**Second pre-charge ending level**	9999	0 to 100%, 9999	Refer to **Pr.761**.	
767 A658	**Second pre-charge ending time**	9999	0 to 3600 s, 9999	Refer to **Pr.762**.	
768 A659	**Second pre-charge upper detection level**	9999	0 to 100%, 9999	Refer to **Pr.763**.	
769 A660	**Second pre-charge time limit**	9999	0 to 3600 s, 9999	Refer to **Pr.764**.	
1133 A666	**Second pre-charge change increment amount**	9999	0 to 100%, 9999	Refer to **Pr.1132**.	

三重科技有限公司
購買 維修 此手冊零組件
電話： 03/-466333
Email: service@repair.tw.com
Line id: @zzzz
www.repair.tw.com

◆ Operation selection for the pre-charge function

- To enable the pre-charge function when PID control is enabled, set the pre-charge end conditions at **Pr.761 Pre-charge ending level** and at **Pr.762 Pre-charge ending time**, or set "77" to **Pr.178 to Pr.189 (Input terminal function selection)**. When operation is started, the inverter runs at the frequency set to **Pr.127 PID control automatic switchover frequency** to enter the pre-charge state.
- Pre-charge ends and PID control starts after a pre-charge ending condition is satisfied.
- The pre-charge function is also activated at a start after release of a PID output suspension (sleep) state or MRS (output shutoff). The PID output suspension (sleep) function is not activated until the started pre-charge operation ends.
- During pre-charge operation, the During pre-charge operation (Y49) signal is output. For the terminal used for the Y49 signal output, set "49 (positive logic)" or "149 (negative logic)" in any of **Pr.190 to Pr.196 (Output terminal function selection)** to assign the function.
- The pre-charge function valid/invalid settings and pre-charge ending conditions are as follows:

Pr.127 setting	Pre-charge ending condition setting			Pre-charge function	Valid pre-charge ending condition*1		
	Pr.761 setting	Pr.762 setting	X77 signal				
9999	—	—	—	Disabled	—		
Other than 9999	9999	9999	Not assigned				
			Assigned	Enabled	—	—	X77
		Other than 9999	Not assigned		—	Time	—
			Assigned		—	Time	X77
	Other than 9999	9999	Not assigned		Result	—	—
			Assigned		Result	—	X77
		Other than 9999	Not assigned		Result	Time	—
			Assigned		Result	Time	X77

*1 When two or more ends conditions are satisfied, the pre-charge operation ends by the first-satisfied condition.

NOTE

- During the pre-charge operation, it is regarded as integrated value = estimated value. The motor speed may drop shortly from the automatic switchover frequency depending on the parameter settings.
- Parameter changes and switchover to the second PID control are applied immediately. If PID control has not started when the settings were changed, PID control starts with changed settings. (If PID control has already started, these settings do not apply. If the changed settings already satisfies a condition to start PID control, the PID control starts as soon as these are changed.)
- The pre-charge also ends when PID control is set to invalid, the start command has been turned OFF, and output has been shut off.

◆ Example of the pre-charge operation

- When the measured amount reaches the pre-charge ending level (**Pr.761 Pre-charge ending level** ≠ "9999")
  The pre-charge operation ends when the measured value reaches the **Pr.761** setting or higher, then the PID control is performed.
  When **Pr.1132 Pre-charge change increment amount** = "9999" (horizontal pumps)

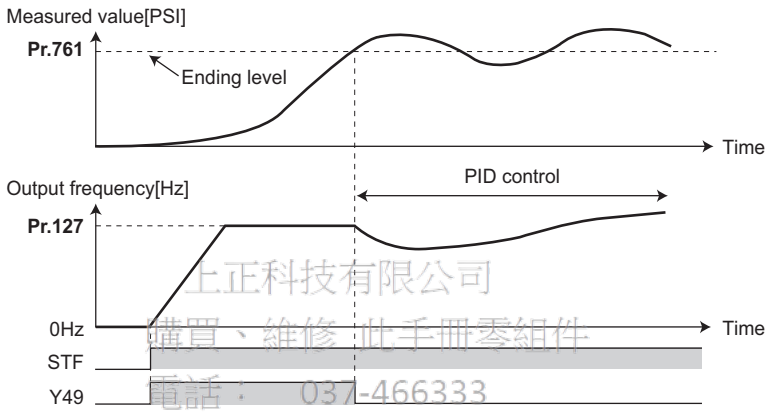

上正科技有限公司
購買、維修 此手冊零組件
電話： 037-466333
Email: service@repairtw.com
Line id: @ozz
www.repairtw.com

When **Pr.1132 Pre-charge change increment amount** ≠ "9999" (vertical pumps), PID control is performed so that the change increment amount of the set point equals the **Pr.1132** setting after the automatic switchover frequency is reached until the pre-charge ending condition is satisfied. (Although PID control is performed after the automatic switchover frequency is reached until the pre-charge ends, the status is regarded as the one during pre-charge.)

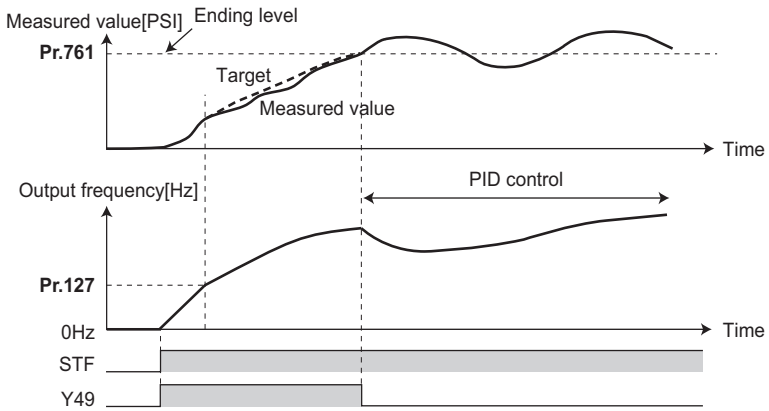

- When the elapsed time reaches the pre-charge ending time (**Pr.762 Pre-charge ending time** ≠ "9999")
  The pre-charge operation ends when the pre-charge time reaches the **Pr.762** setting or higher, then the PID control is performed.

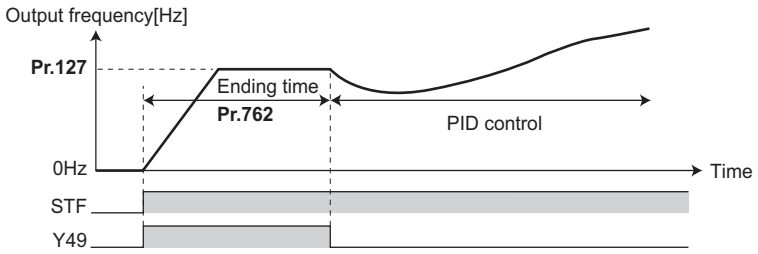

- When the signal is input to end the pre-charge operation
  When the X77 signal turns ON, the pre-charge operation ends, and the PID control starts. (If a start command is given while the X77 signal is ON, the pre-charge operation is not performed, and PID control starts.)

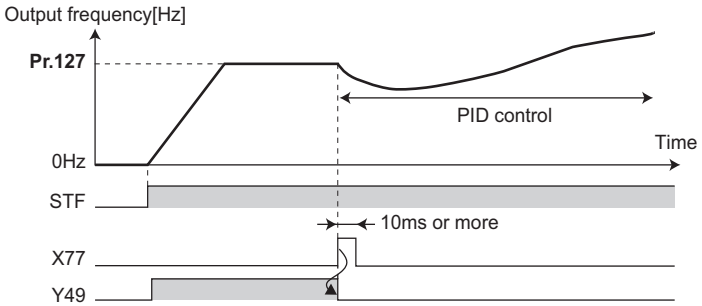

上正科技有限公司
購買、維修、出手用零組件
電話： 037-466333
Email: service@repairtw.com
Line Id: @2222
www.repairtw.com

NOTE

- When the PID output suspension (sleep) function is in use, and the X77 signal is set to valid after this function is released, set the X77 signal to OFF after checking that the during the During pre-charge operation (Y49) signal is OFF.
- When the PID output suspension (sleep) function is in use, and PID control is to be performed immediately after this function is released, leave the X77 signal ON until PID control ends.
- When the pre-charge operation is valid, the pre-charge operation is performed at the output shutoff cancellation (MRS signal, etc.). (The pre-charge operation is also performed in the case of instantaneous power failure when the automatic restart after instantaneous power failure is valid.)
- When the control method is changed to PID control from a control with higher priority in frequency command (multi-speed setting, JOG operation, etc.), the motor is accelerated/decelerated until its speed reaches the automatic switchover frequency (**Pr.127**), and the pre-charge is performed.

◆ Operation setting at pre-charge fault

- The protective function can be activated when limit values are exceeded if the time limit is set at **Pr.764 Pre-charge time limit** and the measured value limit level is set at **Pr.763 Pre-charge upper detection level**.
- Whether to shut off output immediately after the protective function is activated or after a deceleration stop can be selected by **Pr.760** . (Pre-charge protective function is effective regardless of the setting of pre-charge ending conditions.)
- When the time limit is exceeded, the Pre-charge time over (Y51) signal is output. When the measured value limit level is exceeded, the Pre-charge level over (Y53) signal is output. For the Y51 signal, set "51 (positive logic)" or "151 (negative logic)" to **Pr.190 to Pr.196 (Output terminal function selection)**, and for the Y53 signal, set "53 (positive logic)" or "153 (negative logic)" in **Pr.190 to Pr.196 (Output terminal function selection)** to assign the functions to terminals.

NOTE

- For **Pr.764 Pre-charge time limit**, set a value greater than **Pr.762 Pre-charge ending time**.
- For **Pr.763 Pre-charge upper detection level**, set a value greater than **Pr.761 Pre-charge ending level**.

- Example of protective function by time limit (**Pr.760** = "0")

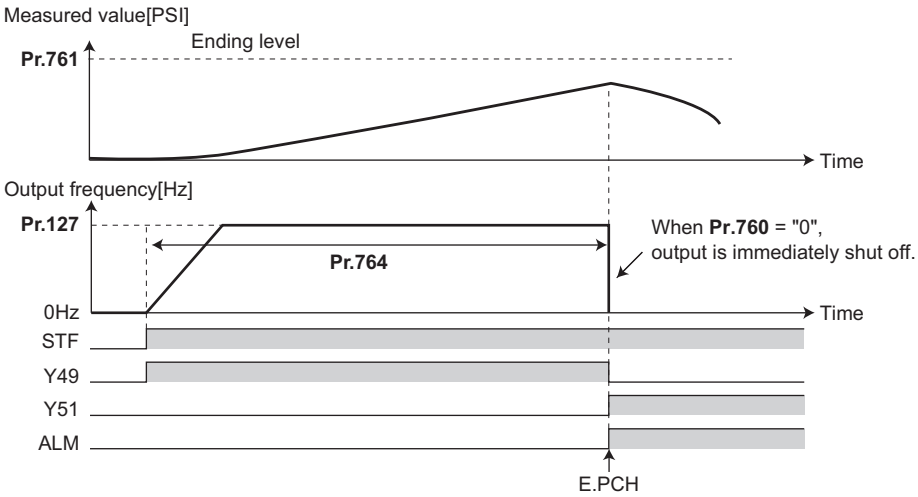

- Example of protective function measured value limit (**Pr.760** = "1")

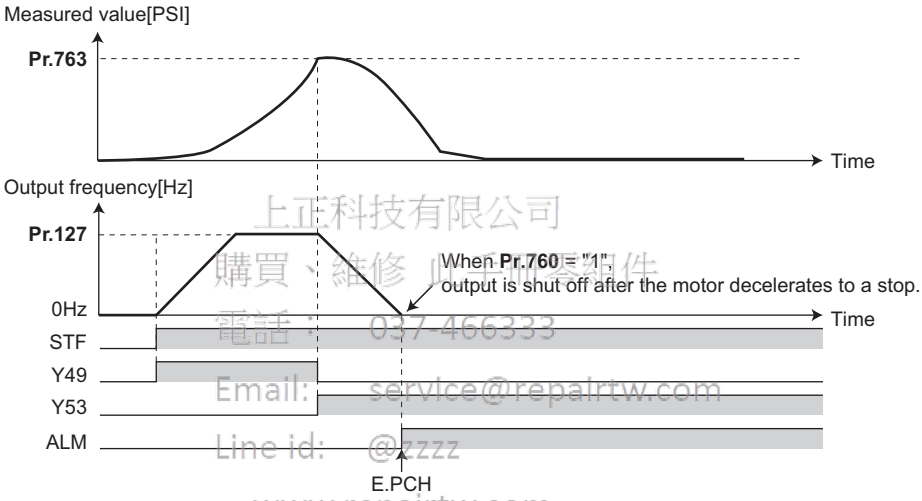

上正科技有限公司
購買、維修 IC 和零組件
電話： 037-466333
Email: service@repairtw.com
Line id: @zzzz
www.repairtw.com

◆ Setting multiple PID pre-charge functions

- When the second pre-charge function is set, two sets of pre-charge functions can be switched for use. The second pre-charge function is enabled by the turning ON RT signal.
- The second pre-charge function parameters and signals function in the same way as the following parameters and signals of the first pre-charge function. Refer to the first pre-charge function when setting the second pre-charge functions.

Classification	First pre-charge function parameters		Second pre-charge function parameters	
	Pr.	Name	Pr.	Name
Parameter	760	Pre-charge fault selection	765	Second pre-charge fault selection
	761	Pre-charge ending level	766	Second pre-charge ending level
	762	Pre-charge ending time	767	Second pre-charge ending time
	763	Pre-charge upper detection level	768	Second pre-charge upper detection level
	764	Pre-charge time limit	769	Second pre-charge time limit
	1132	Pre-charge change increment amount	1133	Second pre-charge change increment amount

Classification	First pre-charge function parameters		Second pre-charge function parameters	
	Signal	Name	Signal	Name
Input signal	X77	Pre-charge end command	X78	Second pre-charge end command
Output signal	Y49	During pre-charge operation	Y50	During second pre-charge operation
	Y51	Pre-charge time over	Y52	Second pre-charge time over
	Y53	Pre-charge level over	Y54	Second pre-charge level over

NOTE

- The second PID pre-charge function is valid also when the first pre-charge function is set to invalid and the second pre-charge function is set.
- When "10" (second function enabled only during constant-speed operation) is set to **Pr.155**, the second PID function is not selected even if the RT signal turns ON.

5.11.10 Multi-pump function (Advanced PID function)

PID control function can adjust the volume of water, etc. by controlling pumps. When the motor output is insufficient, auxiliary motors can be driven by the commercial power supply. Up to three auxiliary motors can be connected.

Pr.	Name	Initial value		Setting range	Description
		FM	CA		
578 **A400**	**Auxiliary motor operation selection**	0		0	No auxiliary motor operation
				1 to 3	Set the number of auxiliary motors to be run.
579 **A401**	**Motor connection function selection**	0		0	Basic system
				1	Alternative system
				2	Direct system
				3	Alternative direct system
580 **A402**	**MC switchover interlock time**	1 s		0 to 100 s	Set the MC switchover interlock time.
581 **A403**	**Start waiting time**	1 s		0 to 100 s	Set the time from when the MC is switched until it starts. Set this time a little longer than the MC switching time.
582 **A404**	**Auxiliary motor connection-time deceleration time**	1 s		0 to 3600 s	Used to decrease the output frequency of the inverter when a motor connection occurs. Set the deceleration time for decreasing the output frequency.
				9999	The output frequency is not decreased when a motor connection occurs.
583 **A405**	**Auxiliary motor disconnection-time acceleration time**	1 s		0 to 3600 s	Used to increase the output frequency of the inverter when a motor connection occurs. Set the acceleration time for increasing the output frequency.
				9999	The output frequency is not increased when a motor connection occurs.
584 **A406**	**Auxiliary motor 1 starting frequency**	60 Hz	50 Hz	0 to 590 Hz	Set the frequency to start the auxiliary motor.
585 **A407**	**Auxiliary motor 2 starting frequency**	60 Hz	50 Hz	0 to 590 Hz	
586 **A408**	**Auxiliary motor 3 starting frequency**	60 Hz	50 Hz	0 to 590 Hz	
587 **A409**	**Auxiliary motor 1 stopping frequency**	0 Hz		0 to 590 Hz	Set the frequency to stop the auxiliary motor.
588 **A410**	**Auxiliary motor 2 stopping frequency**	0 Hz		0 to 590 Hz	
589 **A411**	**Auxiliary motor 3 stopping frequency**	0 Hz		0 to 590 Hz	
590 **A412**	**Auxiliary motor start detection time**	5 s		0 to 3600 s	Set the delay time until the auxiliary motor is started.
591 **A413**	**Auxiliary motor stop detection time**	5 s		0 to 3600 s	Set the delay time until the auxiliary motor is stopped.
1370 **A442**	**Detection time for PID limiting operation**	0 s		0 to 900 s	Set the time until the auxiliary motor is stopped when the PID overpressure control function is used.
1376 **A414**	**Auxiliary motor stopping level**	9999		0 to 100%	Set the level for stopping the auxiliary motor by the PID overpressure control function.
				9999	The PID overpressure control function is disabled.

上正科技有限公司
購買、維修 此手冊零組件
電話： 037-466333
Email: service@repairtw.com
Line id: @zzzz
www.repairtw.com

Point

- Refer to page 401 to set PID control.
- When using the sleep function, refer to page 411 to set the function.

◆ Multi-pump function control method

- Use **Pr.579 Motor connection function selection** to select the control method for the multi-pump function. Use **Pr.578 Auxiliary motor operation selection** to set the number of auxiliary motors.

Pr.579 setting	Control method	Description
0	Basic system	The motor driven by the inverter is always fixed. Commercial power supply operation of auxiliary motors is available by turning ON and OFF the MC between the power supply and the motor depending on the output frequency of the inverter.
1	Alternative system	The motor driven by the inverter is fixed during operation. Commercial power supply operation of auxiliary motors is available by turning ON and OFF the MC between the power supply and the motor depending on the output frequency of the inverter. When output is shut off by the sleep function, the MC between the inverter and the motor is switched to switch the motor to be driven by the inverter.
2	Direct system	When the start signal is turned ON, the motor is started by the inverter. When the conditions to start the next motor are established, MCs between the inverter and the motor and the power supply and the motor are switched to change the operation of the motor driven by the inverter to commercial power supply operation, and the next motor is started by the inverter. When conditions to stop motors are established while auxiliary motors are running, the motor started first (currently driven by the commercial power supply) is stopped first, and then the other motors are stopped.
3	Alternative direct system	When the start signal is turned ON, the motor is started by the inverter. When the conditions to start the next motor are established, MCs between the inverter and the motor and the power supply and the motor are switched to change the operation of the motor driven by the inverter to commercial power supply operation, and the next motor is started by the inverter. When conditions to stop motors are established while auxiliary motors are running, the motor driven by the inverter is decelerated to stop, and operation of a motor currently driven by the commercial power supply is switched to the inverter-driven operation after frequency search. To perform frequency search when the motor operation is switched from commercial power supply operation to inverter-driven operation, set **Pr.57 Restart coasting time** ≠ "9999".

上正科技有限公司
購買、維修 此手冊零組件
電話： 037-466333
Email: service@repairtw.com
Line id: @zzzz
www.repairtw.com

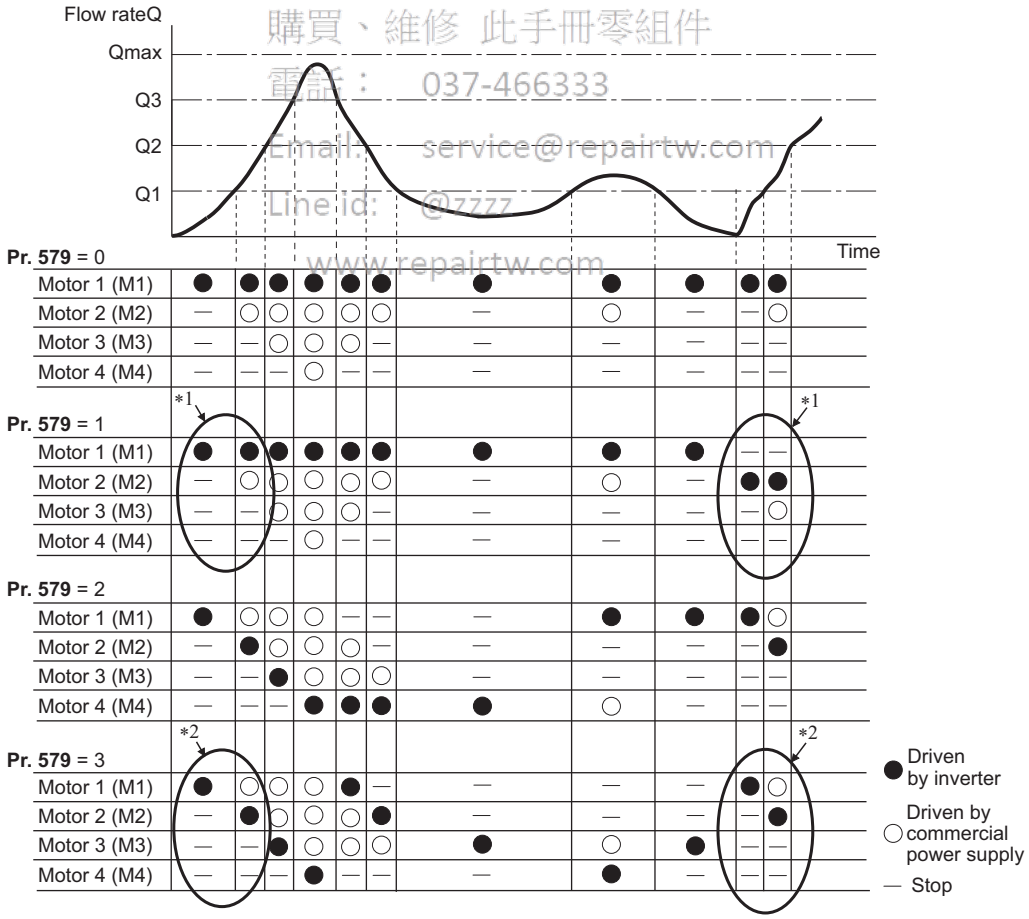

*1 The starting order of motors is M2-M3-M1 if the previous order was M1-M2-M3.

*2 The motor starts in the order of elapsed time after completion of the previous inverter-driven operation, from the longest to the shortest. (The motor that has not been driven by the inverter for the longest time starts first.)

NOTE

- The motor 1 (M1) starts first when power is turned ON for the first time or after inverter reset.
- When the **Pr.578 or Pr.579** setting has been changed, The motor 1 (M1) starts first.

◆ Connection diagram

- Basic system
  (**Pr.579** = "0")
  Sink logic
  Pr.183 = 14
  Pr.185 = 64
  Pr.194 = 72
  Pr.193 = 73
  Pr.194 = 74

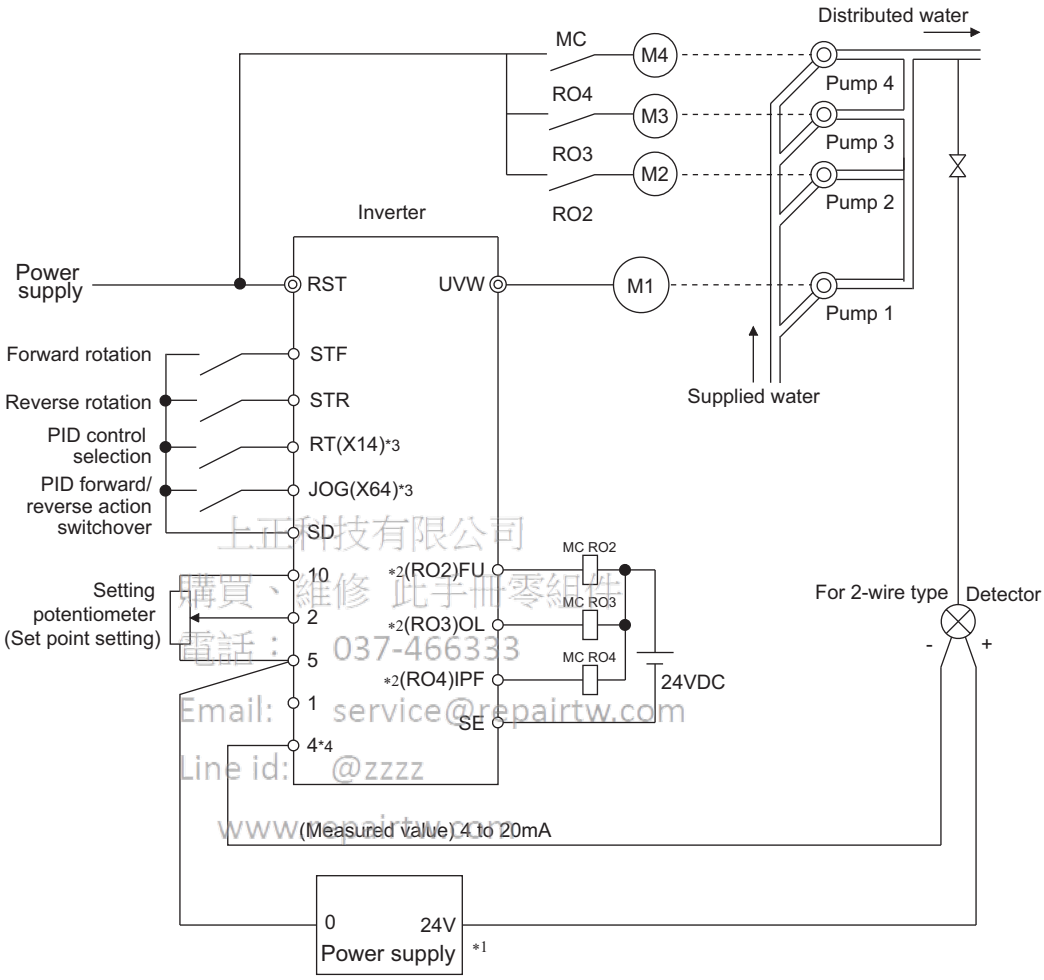

上正科技有限公司
購買、維修 此手冊零組件
電話： 037-466333
Email: service@repairtw.com
Line id: @zzzz
www.repairtw.com

*1 Prepare a power supply matched to the power supply specifications of the detector.
*2 The applied output signal terminals differ by the settings of **Pr.190 to Pr.196 (Output terminal function selection)**.
*3 The applied input signal terminals differ by the settings of **Pr.178 to Pr.189 (Input terminal function selection)**.
*4 The AU signal need not be input.

- Alternative system (**Pr.579** = "1"), direct system (**Pr.579** = "2"), alternative direct system (**Pr.579** = "3")
  Sink logic
  Pr.183 = 14, **Pr.185** = 64, **Pr.194** = 75, **Pr.193** = 71, **Pr.192** = 76, **Pr.191** = 72, **Pr.190** = 77
  Pr.320 = 73, **Pr.321** = 78, **Pr.322** = 74

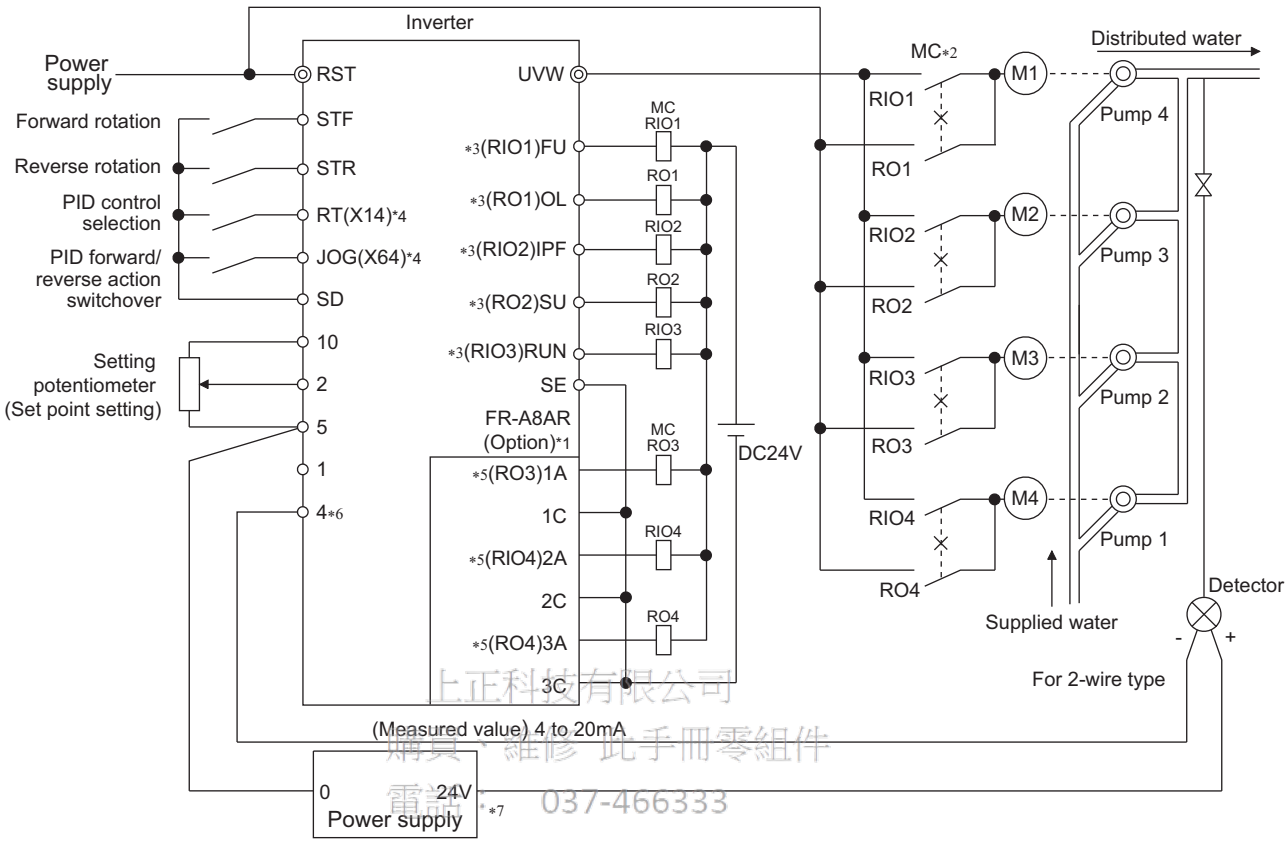

上正科技有限公司
購買、維修 此手冊零組件
電話: 037-466333
Email: service@repairtw.com
Line id: @2222
www.repairtw.com

*1 When driving three or more motors, use the plug-in option (FR-A8AR).
*2 Always provide mechanical interlocks for the MC.
*3 The applied output signal terminals differ by the settings of **Pr.190 to Pr.196 (Output terminal function selection)**.
*4 The applied input signal terminals differ by the settings of **Pr.178 to Pr.189 (Input terminal function selection)**.
*5 The applied output terminals differ by the settings of **Pr.320 to Pr.322 (RA output selection)**.
*6 The AU signal need not be input.
*7 Prepare a power supply matched to the power supply specifications of the detector.

◆ Input/output signals

- When the PID control valid (X14) signal is assigned to the input terminal by setting **Pr.178 to Pr.189 (Input terminal function selection)**, the multi-pump function is enabled only at turn-ON of the X14 signal.
- Use **Pr.190 to Pr.196 (Output terminal function selection)** or relay output option (FR-A8AR) to assign functions of motor control signal to **Pr.320 to Pr.322 (RA output selection)**. (Only positive logic is available.)

Output signal	Pr.190 to Pr.196 and Pr.320 to Pr.322 settings		Function
	Positive logic	Negative logic	
SLEEP	70	170*1	PID output interruption
RO1	71	—*2	Commercial power supply side motor 1 connection RO1
RO2	72	—*2	Commercial power supply side motor 2 connection RO2
RO3	73	—*2	Commercial power supply side motor 3 connection RO3
RO4	74	—*2	Commercial power supply side motor 4 connection RO4
RIO1	75	—*2	Inverter side motor 1 connection RIO1
RIO2	76	—*2	Inverter side motor 2 connection RIO2
RIO3	77	—*2	Inverter side motor 3 connection RIO3
RIO4	78	—*2	Inverter side motor 4 connection RIO4

*1 The value cannot be set in **Pr.320 to Pr.322**.
*2 Negative logic cannot be set.

◆ Motor switchover timing

- Switchover timing at a start (stop) of an auxiliary motor 1 in the basic system (**Pr.579** = "0") and alternative system (**Pr.579** = "1")

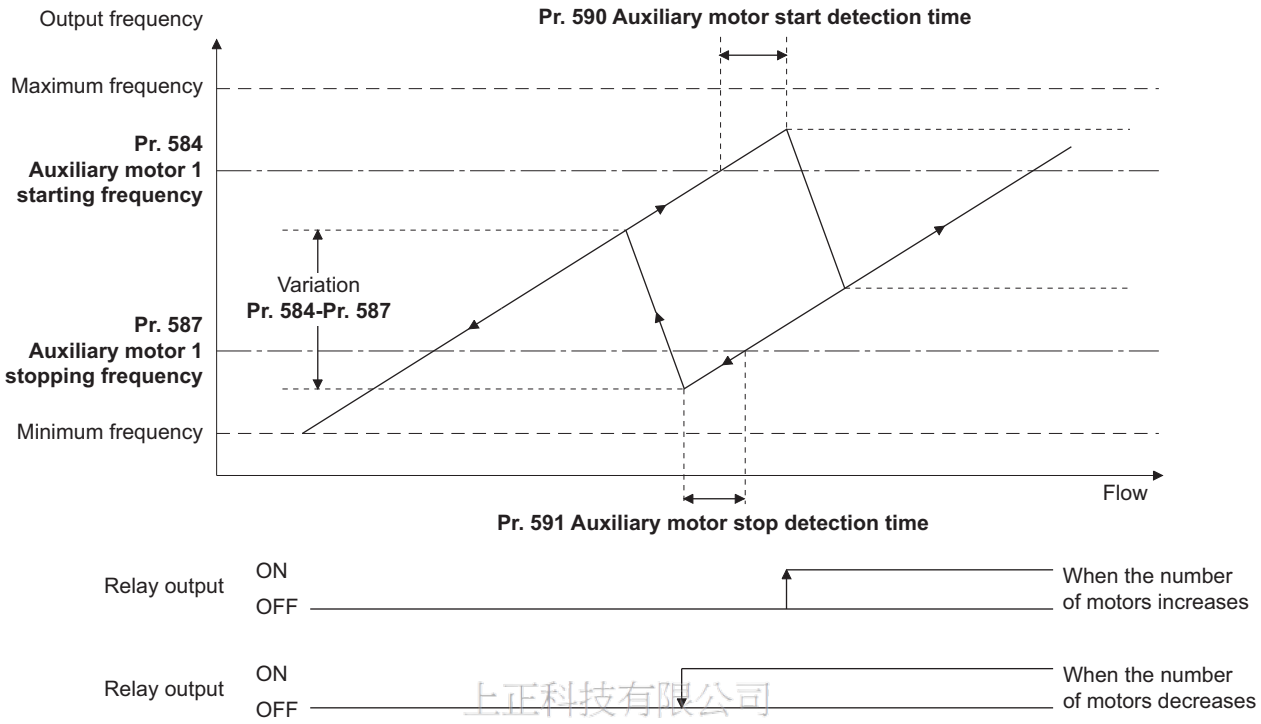

上正科技有限公司
購買、維修此手冊零組件
電話： 037-466333
Email: service@repairtw.com
Line id: @zzzz
www.repairtw.com

- Switchover timing at a start (stop) of an auxiliary motor 1 in the direct system (**Pr.579** = "2") and alternative direct system (**Pr.579** = "3")

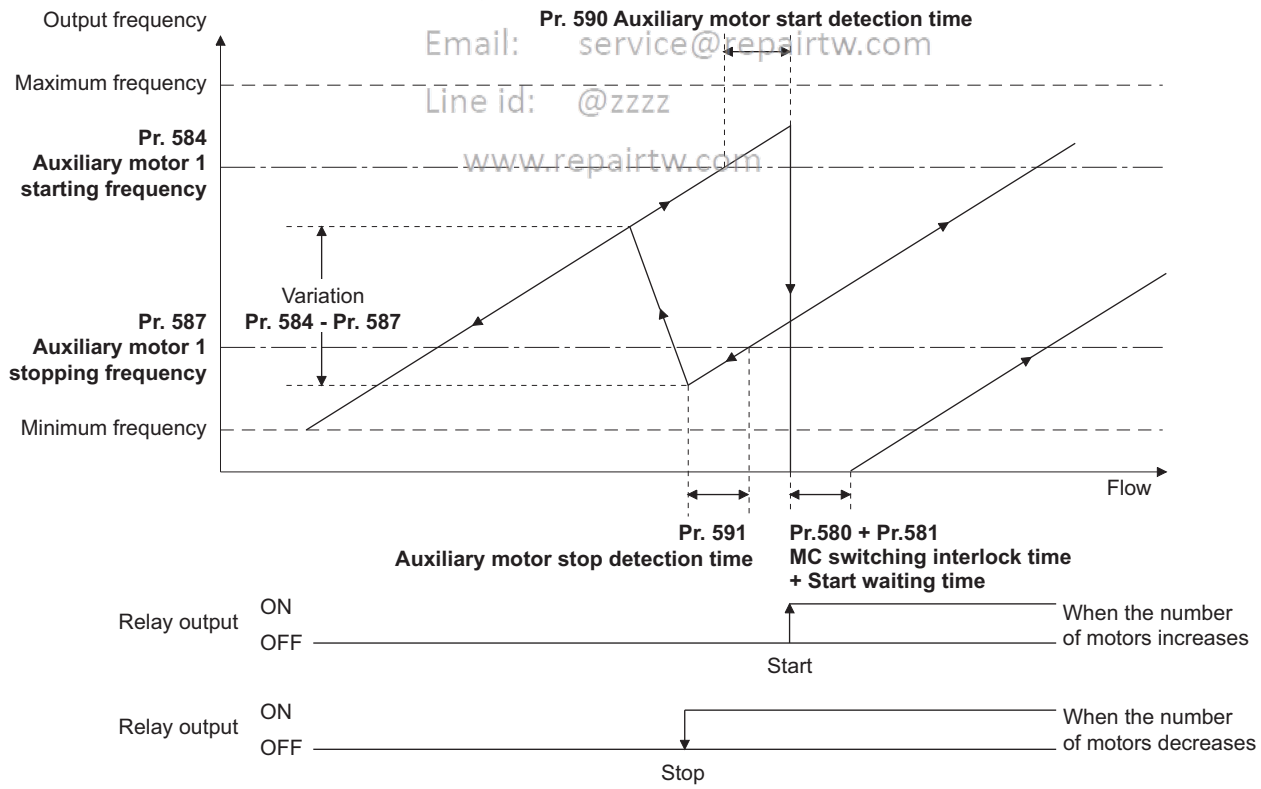

◆ Waiting time setting at MC switchover (Pr.580, Pr.581)

- Set a waiting time for switchover of MC for the direct system (**Pr.579** = "2") or alternative direct system (**Pr.579** = "3").

- Set the MC switching time (for example, the time after RIO1 turns OFF until RO1 turns ON) in **Pr.580 MC switchover interlock time (multi-pump)**.
- Set the time after the MC switchover until the motor starts (for example, the time after RIO1 turns OFF and RIO2 turns ON until the inverter output starts) in **Pr.581 Start waiting time (multi-pump)**. Set this time a little longer than the MC switching time.

◆ Acceleration/deceleration time when an auxiliary motor is connected and disconnected (Pr.582, Pr.583)

- Use **Pr.582 Auxiliary motor connection-time deceleration time** to set the deceleration time for forcibly decreasing the output frequency of the inverter when an auxiliary motor connection occurs. Set the deceleration time in **Pr.582** from **Pr.20 Acceleration/deceleration reference frequency** to stop. The output frequency is not forcibly changed when **Pr.582** = "9999".
- Use **Pr.583 Auxiliary motor disconnection-time acceleration time** to set the acceleration time for forcibly increasing the output frequency of the inverter when an auxiliary motor disconnection occurs. Set the acceleration time in **Pr.583** from stop to **Pr.20 Acceleration/deceleration reference frequency**. The output frequency is not forcibly changed when **Pr.583** = "9999".

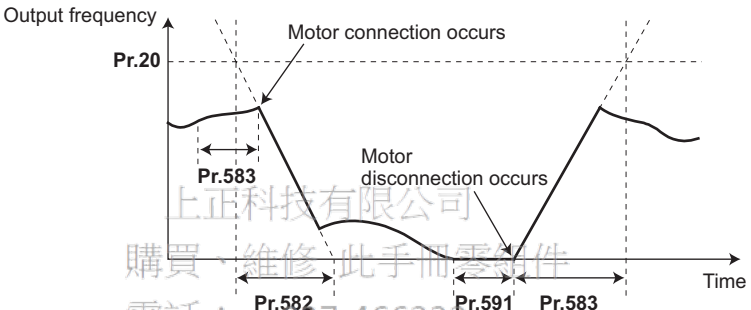

上正科技有限公司
購買、維修、此手冊零組件
電話： 037-466333
Email: service@repairtw.com
Line id: @zzz
www.repairtw.com

◆ Starting auxiliary motors (Pr.584 to Pr.586, Pr.590)

- Use **Pr.584 to Pr.586** to set the output frequency of the inverter at which the commercial power supply operation motors are started. When the output frequency is equal to or higher than the setting for the time set in **Pr.590 Auxiliary motor start detection time** or longer, auxiliary motors driven by the commercial power supply are started.
- To set the starting frequency, use **Pr.584 Auxiliary motor 1 starting frequency** for the first auxiliary motor, and use **Pr.585 Auxiliary motor 2 starting frequency** for the second motor, and use **Pr.586 Auxiliary motor 3 starting frequency** for the third motor.
- The starting sequence depends on the **Pr.579 Motor connection function selection** setting.

◆ Stopping auxiliary motors (Pr.587 to Pr.589, Pr.591)

- Use **Pr.587 to Pr.589** to set the output frequency of the inverter at which the commercial power supply operation motors are stopped. When the output frequency is equal to or lower than the setting for the time set in **Pr.591 Auxiliary motor stop detection time** or longer, auxiliary motors driven by the commercial power supply are stopped.
- To set the stopping frequency, use **Pr.587 Auxiliary motor 1 stopping frequency** for the first auxiliary motor, and use **Pr.588 Auxiliary motor 2 stopping frequency** for the second motor, and use **Pr.589 Auxiliary motor 3 stopping frequency** for the third motor.
- The stopping sequence depends on the **Pr.579 Motor connection function selection** setting.

◆ Timing diagram

- When using four motors in the basic system (**Pr.579** = "0")

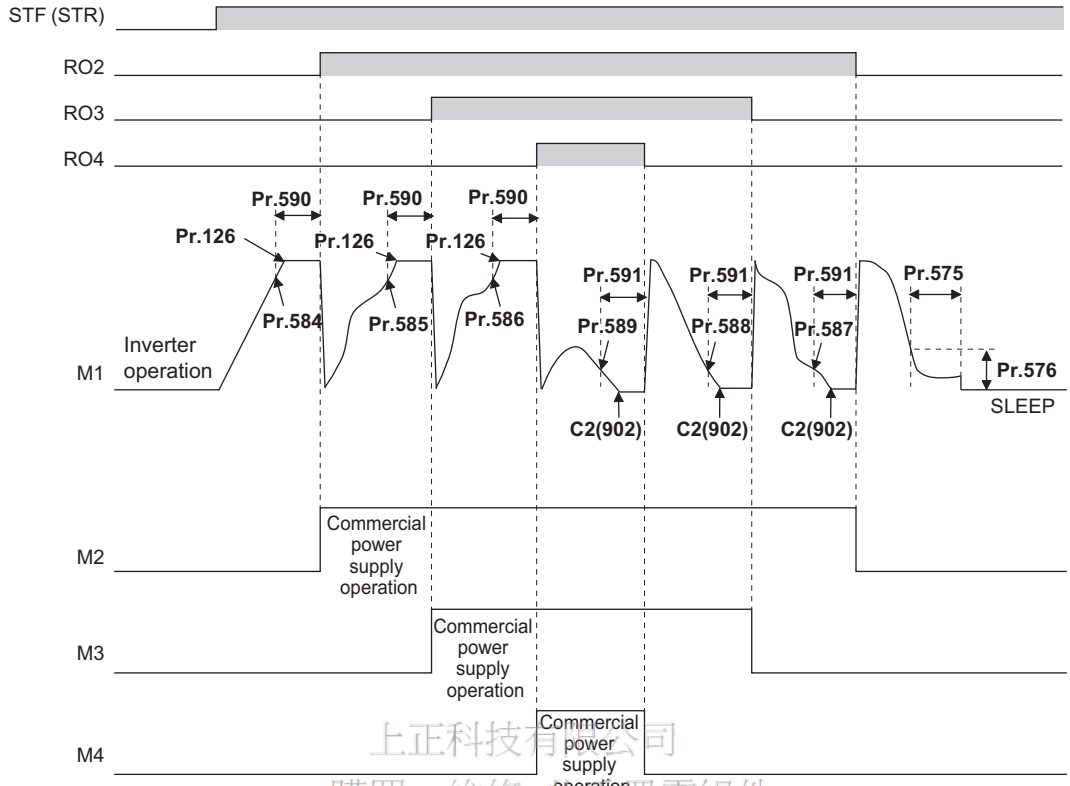

上正科技有限公司
購買、維修 此手冊零組件
電話： 037-466333
Email: service@repairtw.com
Line id: @zzzz
www.repairtw.com

- When using two motors in the alternative system (**Pr.579** = "1")

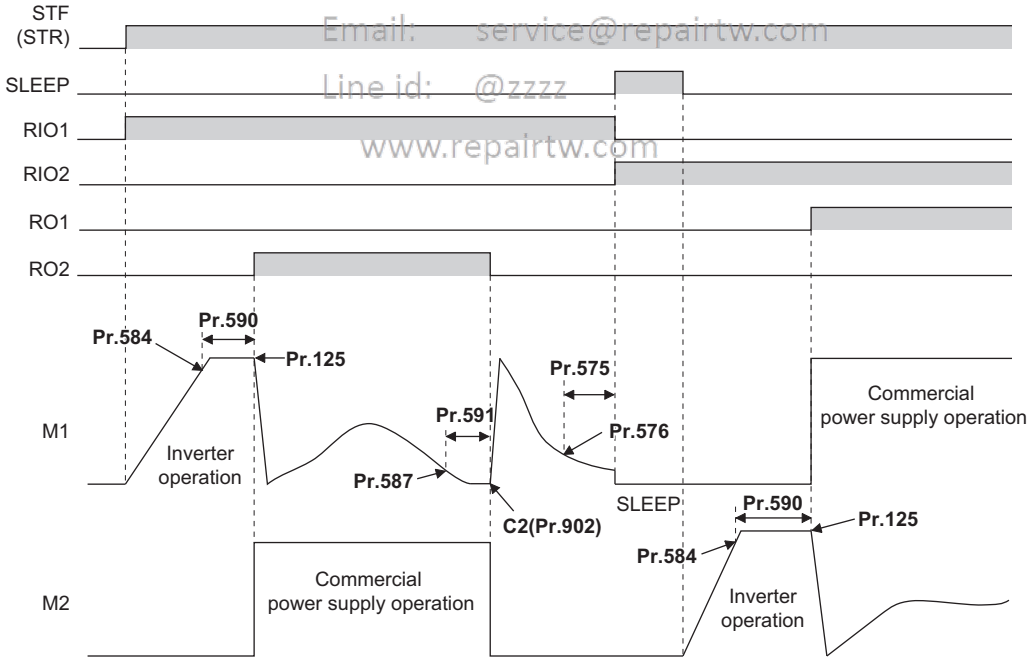

- When using two motors in the direct system (**Pr.579** = "2")

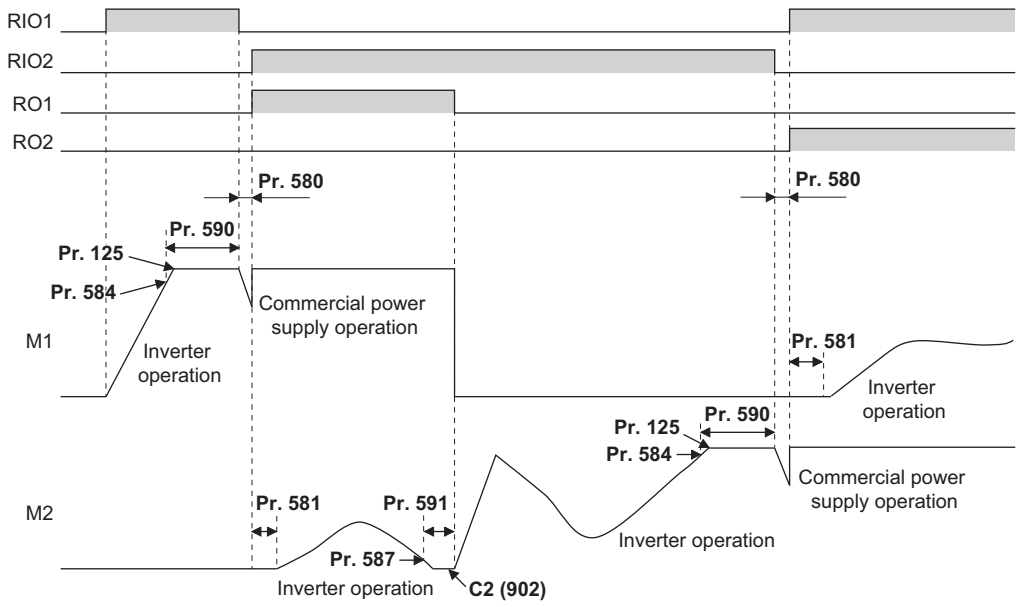

NOTE

- When a start signal is turned OFF while running, MC (RO1 to RO4) turns OFF and the motor decelerates.
- When a protective function is activated while running, MC (RO1 to RO4) turns OFF and the inverter output is shut off.

上正科技有限公司
購買、維修 此手冊零組件
電話： 037-466333
Email: service@repairtw.com
Line id: @zzzz
www.repairtw.com

- When using two motors in the alternative direct system (**Pr.579**="3")

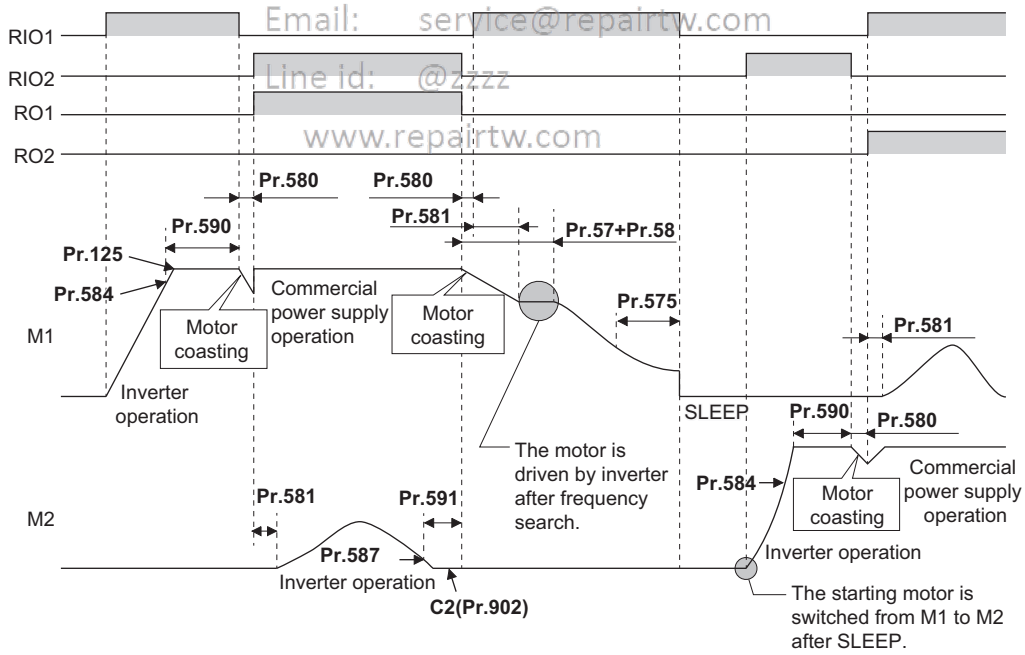

NOTE

- When the start signal is turned OFF during operation, the inverter-driven motor is decelerated to stop. The motors under commercial power supply operation are switched over to inverter-driven operation one at a time and decelerated to stop after frequency search in order from the longest operation time.
- When a protective function is activated while running, MC (RO1 to RO4) turns OFF and the inverter output is shut off.
- When the MRS signal is turned ON during operation, the inverter output is shut off and the running motors coast to a stop. Although the motor with the longest operating time of the commercial power supply operation is switched to the inverter operation after elapse of time set in **Pr.591 Auxiliary motor stop detection time**, the output shutoff status remains. When the MRS signal is turned OFF, the inverter-driven operation starts after frequency search. When the MRS signal is turned OFF, the inverter-driven operation starts after frequency search.
- If the starting signal is turned ON during deceleration regardless of the **Pr.579** setting, the multi-pump operation is performed again.

◆ PID overpressure control (Pr.1370 and Pr.1376)

- When the main valve is suddenly closed in the multi-pump function system, a sudden increase of the pipe pressure may occur, and the pipes may be broken. To prevent fracture of the pipes, all auxiliary motors are stopped when the feedback value exceeds the predetermined level.
- When the PID measured value reaches or exceeds the **Pr.1376 Auxiliary motor stopping level** and the elapsed time exceeds the **Pr.1370 Detection time for PID limiting operation** while the multi-pump function is activated, all operating auxiliary motors are disconnected and allowed to coast to a stop regardless of the **Pr.579 Motor connection function selection** setting. The motor driven by the inverter continues its operation.
- After the auxiliary motor is stopped, the motor operation does not start while the PID measured value is equal to **Pr.1376** setting or more even when the auxiliary motor starting condition is satisfied.

上正科技有限公司
購買、維修 此手冊零組件
電話： 037-466333
Email: service@repairtw.com
Line id: @zzzz
www.repairtw.com

NOTE

- The PID overpressure control function can be used when PID control is performed (reverse action only) by the set point and measured value input using the multi-pump function.
- Either the first or the second PID measured value is used according to the PID control selection. When the control switches between the first PID control and second PID control, the measured value to be used is also switched to continue the control operation.

Parameters referred to

Pr.20 Acceleration/deceleration reference frequency, Pr.21 Acceleration/deceleration time increments ☞ page 216
Pr.57 Restart coasting time, Pr.58 Restart cushion time ☞ page 446
Pr.178 to Pr.189 (Input terminal function selection) ☞ page 355
Pr.190 to Pr.196 (Output terminal function selection) ☞ page 312

5.11.11 PID control enhanced functions

PID control enhanced functions can be used to perform PID control according to applications.

Pr.	Name	Initial value	Setting range	Description
1361 A440	**Detection time for PID output hold**	5 s	0 to 900 s	Set the time from when the deviation falls within the PID output hold range until the PID output is held.
1362 A441	**PID output hold range**	9999	0 to 50%	Set the range in which the PID output is held.
			9999	The PID output holding is disabled.
1363 A447	**PID priming time**	9999	0 to 360 s	Set the time from when the priming operation starts until the main pump starts.
			9999	The PID priming pump function is disabled.
1364 A448	**Stirring time during sleep**	15 s	0 to 3600 s	Set the stirring time.
1365 A449	**Stirring interval time**	0 h	0 to 1000 h	Set the interval time for the stirring operation.
1366 A627	**Sleep boost level**	9999	0 to 100%	Increase the set point before the PID output suspension function is activated.
			9999	The PID sleep boost function is disabled.
1367 A628	**Sleep boost waiting time**	0 s	0 to 360 s	Set the waiting time for the sleep boost operation.
1368 A629	**Output interruption cancel time**	0 s	0 to 360 s	Set the time from when the deviation reaches the output interruption cancel level until the output is started.
111 F031	**Check valve deceleration time**	9999	0 to 3600 s	Set the deceleration time for the check valve deceleration function.
			9999	The check valve deceleration function is disabled.
1369 A446	**Check valve closing completion frequency**	9999	0 to 120Hz	Set the frequency at which the check valve deceleration stops.
			9999	The check valve deceleration function is disabled.
1370 A442	**Detection time for PID limiting operation**	0 s	0 to 900 s	Set the time from when the measured value reaches the pre-warning level (**P.1371**) until the set point change is started.
1371 A443	**PID upper/lower limit pre-warning level range**	9999	0 to 50%	Set the operation range for the PID upper/lower limit pre-warning function.
			9999	The PID upper/lower limit pre-warning function is disabled.
1372 A444	**PID measured value control set point change amount**	5%	0 to 50%	Set the set point change amount for the PID upper/lower limit pre-warning operation.
1373 A445	**PID measured value control set point change rate**	0%	0 to 100%	Set the set point change rate for the PID upper/lower limit pre-warning operation.
1374 A450	**Auxiliary pressure pump operation starting level**	1000%	900 to 1100%	Set the deviation level for operating the auxiliary pressure pump.
1375 A451	**Auxiliary pressure pump operation stopping level**	1000%	900 to 1100%	Set the deviation level for stopping the auxiliary pressure pump.
1377 A452	**PID input pressure selection**	9999	1	Terminal 1 pressure input
			2	Terminal 2 pressure input
			3	Terminal 4 pressure input
			9999	The PID input pressure control function is disabled.
1378 A453	**PID input pressure warning level**	20%	0 to 100%	Set the input pressure warning level.
1379 A454	**PID input pressure fault level**	9999	0 to 100%	Set the input pressure fault level.
			9999	The input pressure fault detection is disabled.
1380 A455	**PID input pressure warning set point change amount**	5%	0 to 100%	Set the set point change amount when the pressure reaches the input pressure warning level.
1381 A456	**PID input pressure fault operation selection**	0	0	The protective function (E.PID) for the input pressure fault is activated.
			1	A deceleration stop is performed when the input pressure fault occurs.

上正科技有限公司
購買、維修 此手機零組件
電話：037-466333
Email: service@repairtw.com
Line id: @zzzz
www.repairtw.com

◆ PID output hold (Pr.1361 and Pr.1362)

- The manipulated amount (PID output) can be fixed when the fluctuation of the deviation is small. This function eliminates unnecessary acceleration/deceleration, which is effective to reduce the power consumption.
- When the deviation falls within the **Pr.1362 PID output hold range** and the elapsed time exceeds the **Pr.1361 Detection time for PID output hold**, the manipulated amount (PID output) is fixed at the output frequency at that time.

- Even if the deviation falls out of the PID output hold range, the manipulated amount (PID output) is maintained for the detection time for PID output hold.

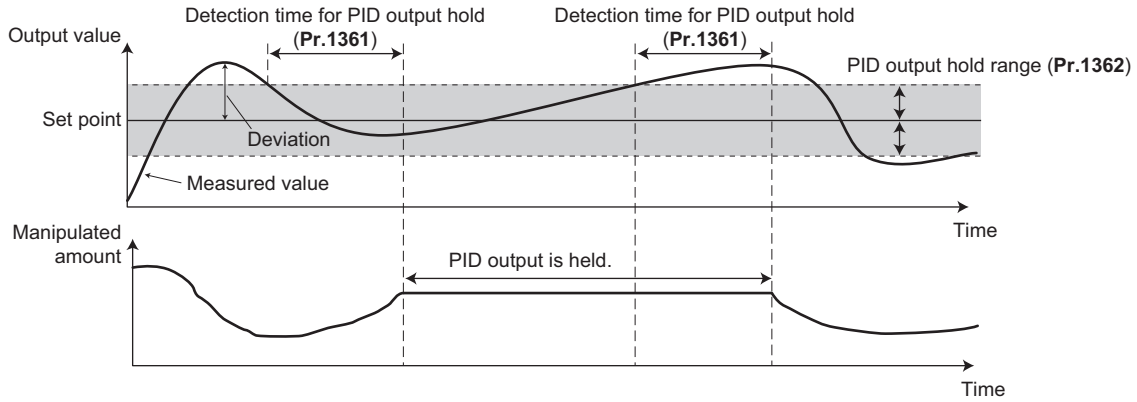

NOTE

- While the PID output is held, calculation is not performed for the P term, I term, and D term. For the P and I terms, the values at the start of the holding period are kept. The D term is set to "0".
- When the control switches between the first PID control and second PID control, the PID output holding state is canceled.
- The PID output holding function is disabled in the following cases:
  When **Pr.1362** = "9999", while the PID setting is not applied to the frequency, during the sleep function, at switching to the auxiliary motor in the multi-pump function, during PID gain tuning, during the sleep boost, during output shutoff, and while the analog current input is lost.

◆ Stirring function during the PID sleep (Pr.1364 and Pr.1365)

上正科技有限公司
購買・維修 此手冊零組件
電話： 037-466333
Email: service@repairtw.com
Line id: @zzzz
www.repairtw.com

- This function starts the pump periodically to prevent clogging of the pump while the PID output suspension function (sleep function) is activated.
- When the sleep function is activated and the elapsed time exceeds the **Pr.1365 Stirring interval time**, the pump is operated at the stirring frequency (**Pr.232** or **Pr.233**). The pump decelerates to stop when the elapsed time exceeds the **Pr.1364 Stirring time during sleep** during the sleep. The interval time count for the second time onward starts after the previous deceleration stop is completed.

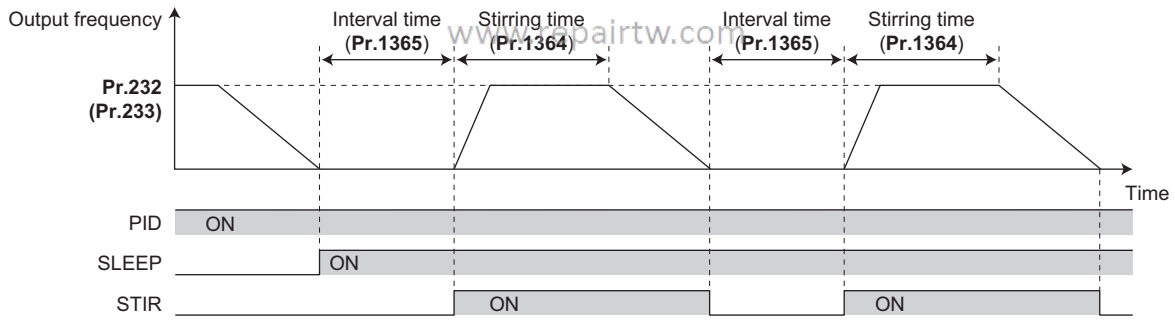

- The rotation direction depends on the **Pr.232** and **Pr.233** settings.

Stirring frequency		Rotation direction	Remarks
Pr.232 setting	Pr.233 setting		
9999	9999	—	The stirring function during the PID sleep is disabled.
0 to 590 Hz	Any value	Command direction	**Pr.232** frequency is used for stirring.
9999	0 to 590 Hz	Opposite to the command direction	**Pr.233** frequency is used for stirring.

- The stirring signal (STIR) turns ON during the stirring operation. To use the STIR signal, set "218 (positive logic) or 318 (negative logic)" in any of **Pr.190 to Pr.196 (Output terminal function selection)** to assign the function.

- When **Pr.579 Motor connection function selection** = "1 or 3" (multi-pump function), the starting order of the motors is changed when the sleep function is activated. The stirring operation during the sleep is applied to the motor to be started first next time. When the previous starting order was M1-M2-M3-M4, and the next starting order is M2-M3-M4-M1, stirring operation during the sleep will be applied to the M2 motor.
- When the auxiliary motor starting condition is satisfied by the stirring operation during the sleep while the multi-pump function is used, the stirring operation continues. The auxiliary motor does not start.

NOTE

- When the control switches between the first PID control and second PID control during the sleep function, the interval time and the stirring time timer are carried over.
- When the sleep function cancellation condition is satisfied, the sleep function is cancelled, and the stirring function during the sleep is also cancelled.
- Changing the terminal assignment using **Pr.190 to Pr.196 (Output terminal function selection)** may affect the other functions. Set parameters after confirming the function of each terminal.

◆ PID priming pump function (Pr.1363)

- This function starts the priming pump first before starting the main pump so that the main pump does not intake air at start.
- When the start command is turned ON after setting **Pr.1363 PID priming time** ≠ "9999", the Priming pump operation (Y217) signal turns ON to start the priming pump. When the elapsed time exceeds the **Pr.1363** setting, the main pump starts.
- The priming pump continues operation during operation of the main pump. When the STF signal is turned OFF to stop the main pump, the priming pump also stops.
- For the Y217 signal, set "217 (positive logic)" or "317 (negative logic)" in any of **Pr.190 to Pr.196 (Output terminal function selection)** to assign the function.

上正科技有限公司
購買、維修 此手冊零組件
電話： 037-466333
Email: service@repairtw.com
Line id: @zzzz
www.repairtw.com

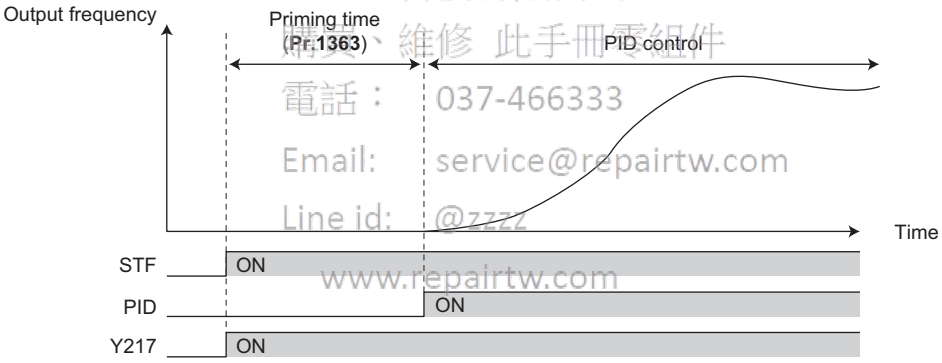

NOTE

- The priming operation is performed at every startup.
- When the operation is restarted after inverter reset by a protective function activation, the priming operation is performed.
- When the inverter is restarted by the retry operation at a fault occurrence, the priming pump operation is continued and after the restart, the PID control operation is performed without waiting for the priming time.
- When the control switches between the first PID control and second PID control during the priming time, the priming time is carried over.
- The PID priming pump function is enabled when the PID setting is applied to the frequency.
- Even when the inverter emergency stop operation (output shutoff by the MRS signal, etc.) is performed, the PID priming pump function operation continues while the power is supplied to the control circuit. For the emergency stop operation, configure another circuit to stop the priming pump.
- Changing the terminal assignment using **Pr.190 to Pr.196 (Output terminal function selection)** may affect the other functions. Set parameters after confirming the function of each terminal.

◆ PID auxiliary pressure pump function (Pr.1374 and Pr.1375)

- This function enables signal output to activate an auxiliary pressure pump when the pump flow rate is low in the system which constantly requires a high pressure.

- When the deviation exceeds the auxiliary pressure pump operation starting level (**Pr.1374 Auxiliary pressure pump operation starting level** - 1000%) after the PID output suspension function (sleep function) is activated, the auxiliary pressure pump starts and the Auxiliary pressure pump operation (Y226) signal turns ON.
- When the deviation falls below the auxiliary pressure pump operation stopping level (**Pr.1375 Auxiliary pressure pump operation stopping level** - 1000%) during the auxiliary pressure pump operation, the auxiliary pressure pump stops.
- For the Y226 signal, set "226 (positive logic)" or "326 (negative logic)" in any of **Pr.190 to Pr.196 (Output terminal function selection)** to assign the function.

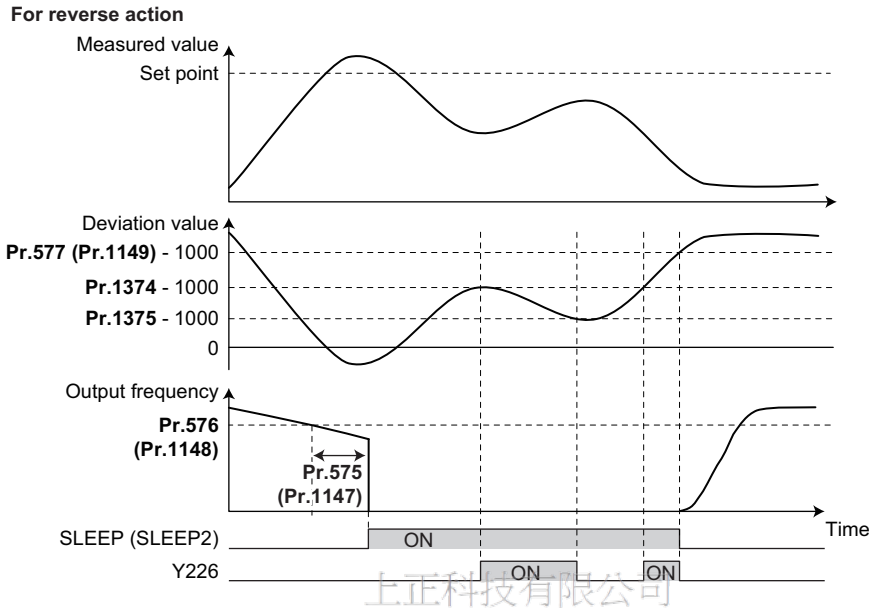

上正科技有限公司
購買、維修 此手冊零組件
電話： 037-466333
Email: service@repairtw.com
Line id: @zzz
www.repairtw.com

NOTE

- The recommended settings of **Pr.577 (Pr.1149), Pr.1374,** and **Pr.1375** are as follows.
  Pr.577 (Pr.1149)> **Pr.1374**> **Pr.1375**
- Even when the inverter emergency stop operation (output shutoff by the MRS signal, etc.) is performed, the PID auxiliary pressure pump function operation continues while the power is supplied to the control circuit. For the emergency stop operation, configure another circuit to stop the auxiliary pressure pump.
- Changing the terminal assignment using **Pr.190 to Pr.196 (Output terminal function selection)** may affect the other functions. Set parameters after confirming the function of each terminal.

◆ PID sleep boost (Pr.1366 to Pr.1368)

- The pump pressure can be increased before the PID output suspension function (sleep function) is activated. This function is useful to prevent frequent repetition of starting and stopping of the pump, and to maintain the sleep state for a long period of time.
- When the normal condition to activate the sleep function is satisfied (the output frequency is less than **Pr.576** setting for the time set in **Pr.575** or longer), the PID set point automatically increases by the amount set in **Pr.1366 Sleep boost level**.
- When the measured value reaches to the set point during **Pr.1367 Sleep boost waiting time**, the sleep function is activated. Then, the set point returns to its original value from the sleep boost set point. Then, the set point returns to its original value from the sleep boost set point.
- When the measured value does not reach to the sleep boost set point after the time set in **Pr.1367** passes, PID control continues without activating the sleep function.

- When the deviation remains at the **Pr.577** setting or higher for the time set in **Pr.1368 Output interruption cancel time**, the inverter output restarts.

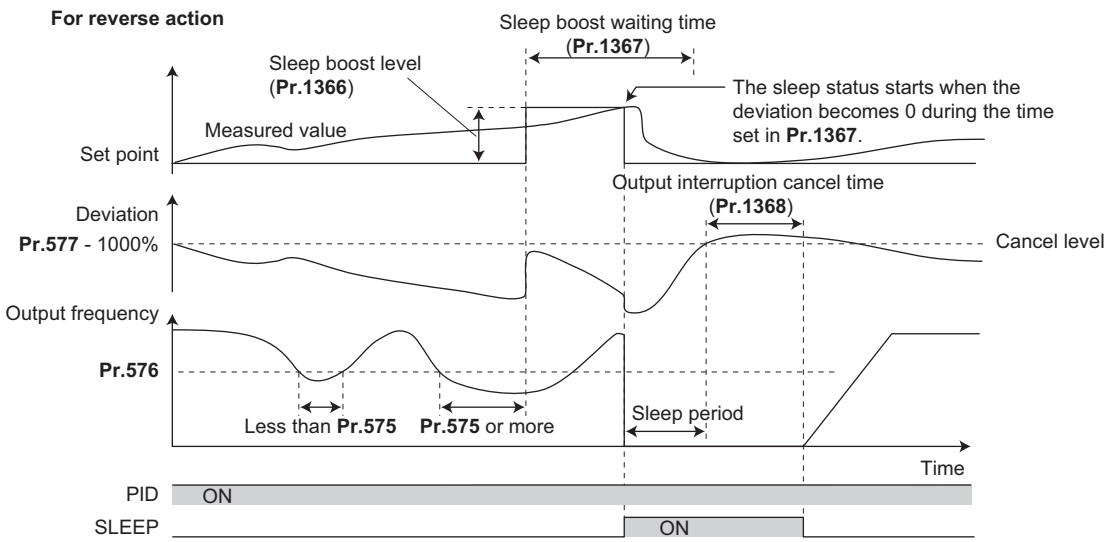

◆ Check valve deceleration function (Pr.111 and Pr.1369)

- When the pump is stopped, slow deceleration can be applied to the predetermined section to prevent the water hammer sound caused by closing the valve.
- The **Pr.111 Check valve deceleration time** setting is applied to the section between **Pr.2 Minimum frequency** and **Pr.1369 Check valve closing completion frequency**.

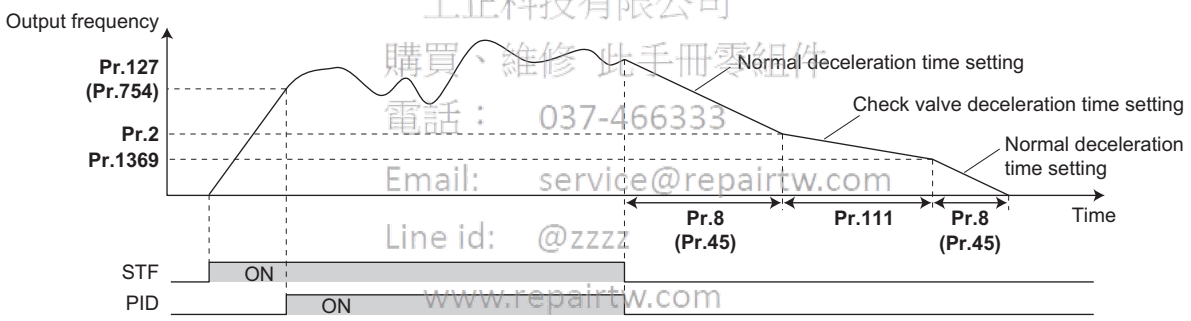

上正科技有限公司
購買、維修 此手冊零組件
電話： 037-466333
Email: service@repairtw.com
Line id: @zzzz
www.repairtw.com

NOTE

- The check valve deceleration function is enabled when the PID setting is applied to the frequency.
- When the **Pr.1369** setting is higher than the **Pr.2** setting, the normal deceleration time (**Pr.8 or Pr.45**) setting is applied.

◆ PID upper/lower limit pre-warning (Pr.1370 to Pr.1373)

- The set point can be changed to suppress increases of the measured value before PID upper limit (FUP) or PID lower limit (FDN) is detected.
- When the measured value reaches and remains at the pre-warning level set in **Pr.1371 PID upper/lower limit pre-warning level range** for the time set in **Pr.1370 Detection time for PID limiting operation**, the PID upper/lower limit pre-warning (Y219) signal or the Second PID upper/lower limit pre-warning (Y220) signal is output. Also, the set point is changed by the amount set in **Pr.1372 PID measured value control set point change amount**.
- Set the rate (%/s) in **Pr.1373 PID measured value control set point change rate** for changing the set point by the Pr.1372 setting value. When the measured value falls within the normal range, the set point returns to its original value.
- For the Y219 and Y220 signals, assign the functions to output terminals using the **Pr.190 to Pr.196 (Output terminal function selection)**.

Output signal	Pr.190 to Pr.196 setting	
	Positive logic	Negative logic
Y219	219	319
Y220	220	320

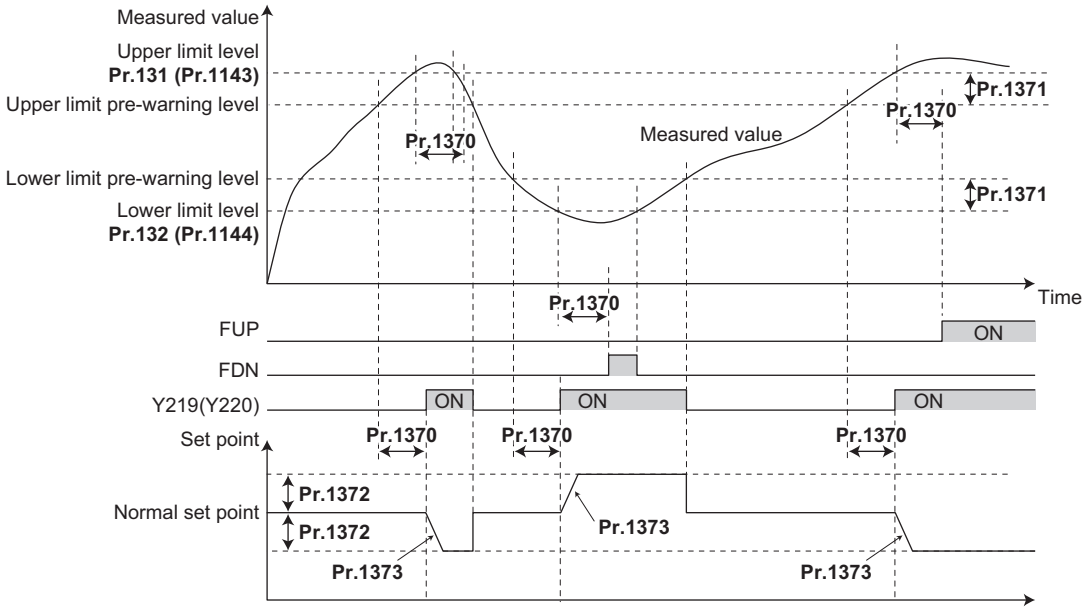

NOTE

- When **Pr.554**="5, 7, 15, or 17" and a deceleration stop is performed by the FUP/FDN signal detection, the set point changed by the **Pr.1372** setting value remains effective.
- The set point change by the PID upper/lower limit pre-warning function is enabled when the PID setting is applied to the frequency.
- When the control switches between the first PID control and second PID control while the set point is changed by the **Pr.1372** setting value or while the Y219 (Y220) signal is output, the set point returns to its original value.
- When the upper limit or lower limit is disabled (**Pr.131** or **Pr.132** = "9999"), the upper/lower limit pre-warning function is not activated.

上正科技有限公司
購買、維修 此手冊零組件
電話： 037-466333
Email: service@repairtw.com
Line id: @zzzz
www.repairtw.com

◆ PID dry run monitoring function (Pr.1370)

- This function can prevent operation without water in the pipes by monitoring the flow rate (measured value) inside the pipes. When the flow rate decreases while the FU signal is ON, an output signal is sent for notification.
- The Dry run (DRY) signal is output during PID control when the measured value is lower than the lower limit (**Pr.132** or **Pr.1144**) and the output frequency is higher than the setting in **Pr.42 Output frequency detection** or **Pr.43 Output frequency detection for reverse rotation** (FU signal ON) for the time set in **Pr.1370 Detection time for PID limiting operation**.
- To use the DRY signal, set "228 (positive logic) or 328 (negative logic)" in any of **Pr.190 to Pr.196 (Output terminal function selection)** to assign the function.
- The PID dry run monitoring function is enabled for the reverse action.

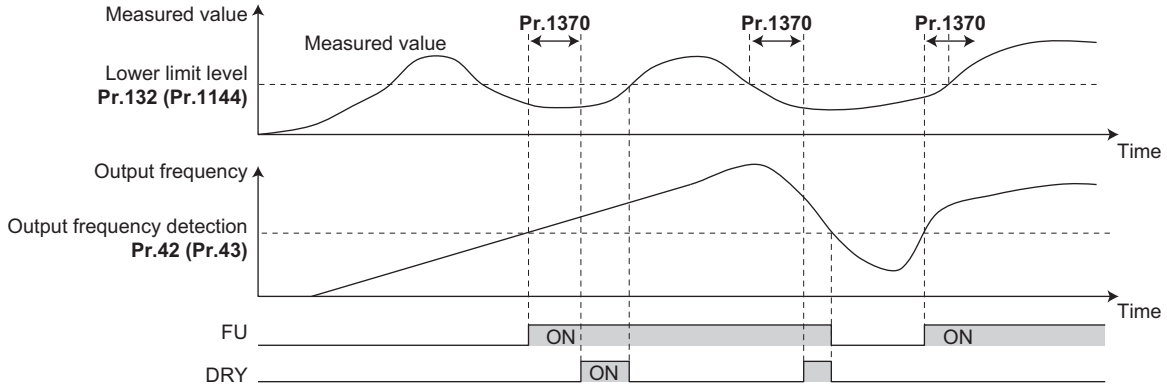

NOTE

- The PID dry run monitoring function is enabled when the PID setting is applied to the frequency.

◆ PID input pressure control (Pr.1370, Pr.1373, and Pr.1377 to Pr.1381)

- In order to prevent air intake and cavitation inside the pump, this function controls the pump inlet pressure so that there is no water shortage.
- To enable the PID input pressure control function, set the terminal for the pressure input in **Pr.1377 PID input pressure selection**. (Select a terminal different from the one used for inputting the set point, measured value, or deviation.)

Pr.1377 setting	Pressure input terminal	Remarks
1	Terminal 1	Set Pr.868 = "0 (initial value)".
2	Terminal 2	—
3	Terminal 4	Set Pr.858 = "0 (initial value)".
9999 (initial value)	The PID input pressure control function is disabled.	—

- When the input pressure measured at the inlet remains lower than the **Pr.1378 PID input pressure warning level** for the time set in **Pr.1370 Detection time for PID limiting operation**, the PID input pressure warning (Y229) signal is output. Also, the set point is changed by the amount set in **Pr.1380 PID input pressure warning set point change amount**.
- Set the rate (%/s) in **Pr.1373 PID measured value control set point change rate** for changing the set point by the **Pr.1380** setting value. When the input pressure value falls within the normal range, the set point returns to its original value.
- When the input pressure measured at the inlet remains lower than the **Pr.1379 PID input pressure fault level** for the time set in **Pr.1370 Detection time for PID limiting operation**, the operation for the abnormal input pressure starts and the PID input pressure fault (Y230) signal is output.
- Select the operation for the abnormal input pressure in **Pr.1381**.

Pr.1381 setting	Operation for the abnormal input pressure	Y230 signal
0 (initial value)	Output shutoff by the protective function (E.PID) activation	The signal is output at the same time with the protective function.
1	Deceleration stop (Operation can be restarted when the input pressure returns to normal.)	The signal is output after a deceleration stop.

上正科技有限公司
購買、維修 此手冊零組件
電話： 037-466333
Email: service@repairtw.com
Line id: @zzzz
www.repairtw.com

- For the Y229 and Y230 signals, assign the functions using **Pr.190 to Pr.196 (Output terminal function selection)**.

Output signal	Pr.190 to Pr.196 setting	
	Positive logic	Negative logic
Y229	229	329
Y230	230	330

- To monitor the input pressure, set "69" in the monitor selection parameters. (0.1% increments)

Monitor item	Parameter Setting			Communication monitor code	
	Pr.52, Pr.774 to Pr.776, and Pr.992 (Operation panel indication)	Pr.54 (Terminal FM/CA output)	Pr.158 (Terminal AM output)	RS-485 communication dedicated monitor (hexadecimal)	MODBUS RTU real time monitor
PID input pressure value	69	69	69	H45	40269

For reverse action

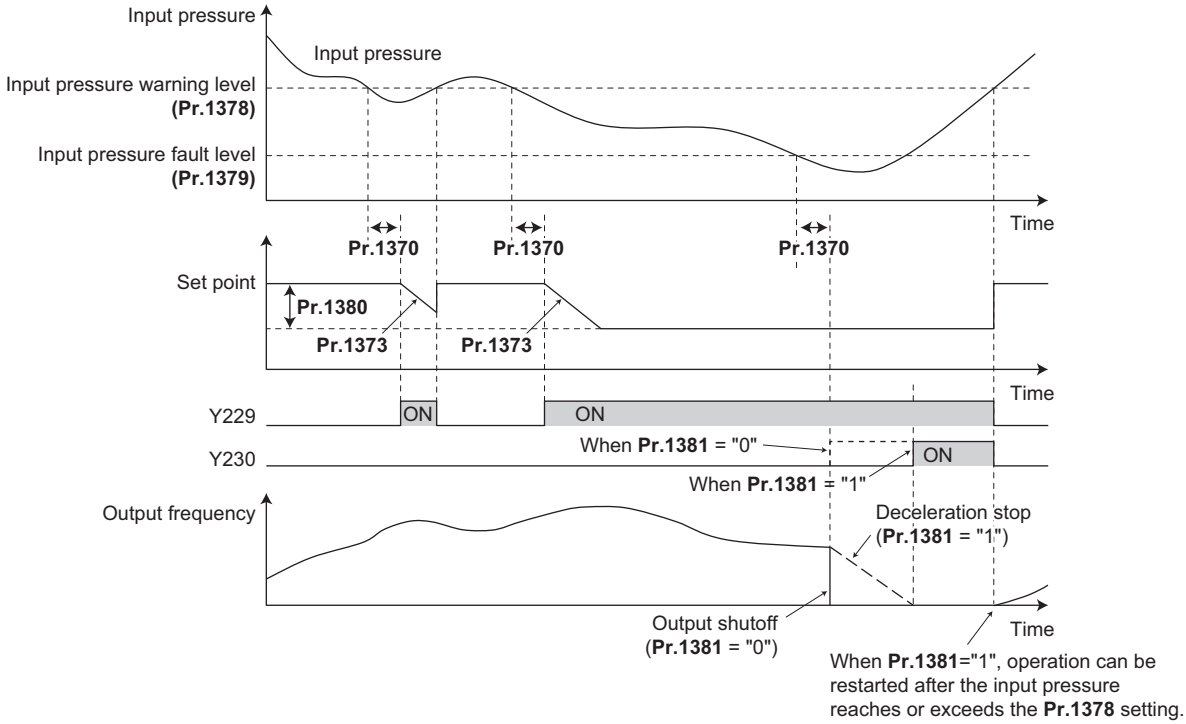

NOTE

- When the control switches between the first PID control and second PID control while the set point is changed by the **Pr.1380** setting value or while the Y229 (Y230) signal is output, the set point first returns to its original value, and is changed to the value after the switching.
- When the PID input pressure control function and the PID upper/lower limit pre-warning function are used simultaneously, each function may change the set point. When the set point change is attempted by both functions, the change by the PID input pressure control function has priority.
- When the PID input pressure control function and the PID sleep boost function are used simultaneously, each function may change the set point. When the set point change is attempted by both functions, the change by the PID input pressure control function has priority. (The sleep state is established without applying the set point change by the PID sleep boost function.)

上正科技有限公司
購買、維修 此手冊零組件
電話： 037-468333
Email: service@repairtw.com
Line Id: @2222
www.repairtw.com

5.11.12 Automatic restart after instantaneous power failure/flying start with an induction motor

V/F Magnetic flux

The inverter can be restarted without stopping the motor operation in the following situations:

- When switching from commercial power supply operation over to inverter running
- When an instantaneous power failure occurs during inverter running
- When the motor is coasting at start

Pr.	Name	Initial value FM	Initial value CA	Setting range	Description
162 A700	**Automatic restart after instantaneous power failure selection**	0		0 (2)	Frequency search only performed at the first start
				1	Reduced voltage start only at the first start (no frequency search)
				3	Frequency search only performed at the first start (reduced impact restart)
				10 (12)	Frequency search at every start
				11	Reduced voltage start at every start (no frequency search)
				13	Frequency search at every start (reduced impact restart)
299 A701	**Rotation direction detection selection at restarting**	9999		0	Rotation direction detection disabled
				1	Rotation direction detection enabled
				9999	When **Pr.78 Reverse rotation prevention selection** = "0", rotation direction detection enabled.
					When **Pr.78 Reverse rotation prevention selection** = "1 or 2", rotation direction detection disabled.
57 A702	**Restart coasting time**	9999		0	Coasting time differs according to the inverter capacity.*1
				0.1 to 30 s	Set the waiting time for the inverter to perform a restart after restoring power due to an instantaneous power failure.
				9999	No restart
58 A703	**Restart cushion time**	1 s		0 to 60 s	Set the voltage cushion time for restart.
163 A704	**First cushion time for restart**	0 s		0 to 20 s	Set the voltage cushion time for restart. Consider this matched to the size of the load amount (moment of inertia/ torque).
164 A705	**First cushion voltage for restart**	0%		0 to 100%	
165 A710	**Stall prevention operation level for restart**	120%	110%	0 to 400%	Set the stall prevention level at restart operation on the assumption that the inverter rated current is 100%.
611 F003	**Acceleration time at a restart**	9999		0 to 3600 s	Set the acceleration time to reach **Pr.20 Acceleration/deceleration reference frequency** at restart.
				9999	Standard acceleration time (for example, **Pr.7**) is applied as the acceleration time at restart.

*1 The coasting time when **Pr.57** = "0" is as shown below. (When **Pr.162** and **Pr.570** are set to the initial value.)
FR-F820-00077(1.5K) or lower and FR-F840-00038(1.5K) or lower: 0.5 s
FR-F820-00105(2.2K) to FR-F820-00340(7.5K), FR-F840-00052(2.2K) to FR-F840-00170(7.5K): 1 s
FR-F820-00490(11K) to FR-F820-02330(55K), FR-F840-00250(11K) to FR-F840-01160(55K): 3.0 s
FR-F820-03160(75K) or higher, FR-F840-01800(75K) or higher: 5.0 s

上正科技有限公司
購買、維修、工控零組件
電話：037-466333
Email：service@repairtw.com
www.repairtw.com

◆ Automatic restart after instantaneous power failure function

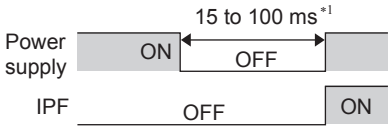

*1 10 to 100 ms for IP55 compatible models

- The inverter output is shut off at the activation of the Instantaneous power failure (E.IPF) or Undervoltage (E.UVT). (Refer to page 577 for E.IPF or E.UVT.)
- When E.IPF or E.UVT is activated, the Instantaneous power failure/undervoltage (IPF) signal is output.
- The IPF signal is assigned to terminal IPF in the initial status. By setting "2 (positive logic) or 102 (negative logic)" in any of **Pr.190 to Pr.196 (Output terminal function selection)**, the IPF signal can be assigned to another terminal.
- When the automatic restart after instantaneous power failure function is selected, motor driving is resumed at the power restoration after an instantaneous power failure or undervoltage. (E.IPF and E.UVT are not activated.)

◆ Connection (CS signal)

- When the automatic restart after instantaneous power failure / flying start signal (CS) is assigned to the input terminal by setting "6" in **Pr.178 to Pr.189 (Input terminal function selection)**, restart operation is enabled at turn-ON of the CS signal.

- When the CS signal is assigned to an input terminal and **Pr.57 Restart coasting time** ≠ "9999" (with restart), the inverter cannot be operated while the CS signal remains OFF.

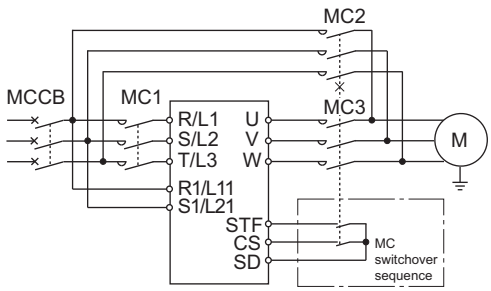

With electronic bypass sequence

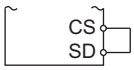

For use for only automatic restart after instantaneous power failure or flying start, turn ON the CS signal in advance.

Only with restart after instantaneous power failure

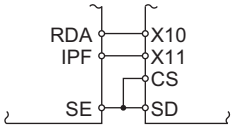

Separated converter type

- Separated converter types detect the instantaneous power failure on the converter unit side. Perform wiring so that the IPF signal transmitted from the converter unit is input to the terminal to which the X11 signal is assigned.
  On the converter unit side, enable the restart operation. (For setting the converter unit, refer to the Instruction Manual of the converter unit.)
- For the terminal used for the X10 or X11 signal, set "10" (X10) or "11" (X11) in any of **Pr.178 to Pr.189** and assign the function. (For separated converter types, the X10 signal is assigned to the terminal MRS in the initial setting.)
- For the X10 signal of separated converter types, NC contact input specification is selected in the initial setting. Set **Pr.599** = "0" to change the input specification to NO contact.

上正科技有限公司
購買、維修 此手冊零組件
電話: 037-466333
Email: service@repairtw.com
www.repairtw.com

NOTE

- Changing the terminal assignment using **Pr.178 to Pr.189 (Input terminal function selection)** may affect the other functions. Set parameters after confirming the function of each terminal.
- If the CS signal is not assigned to any input terminal, solely setting **Pr.57** enables the restart operation at all times.

◆ Setting for the automatic restart after instantaneous power failure operation (Pr.162)

- The **Pr.162** settings and the instantaneous power failure automatic restart operation under each operation mode are as shown in the following table.

Pr.162 setting	Restart operation	V/F control, Advanced magnetic flux vector control	PM motor control
0 (initial value), (2)*1	At first start	Frequency search	Frequency search for PM motor (Refer to page 451.)
1	At first start	Reduced voltage start	
3	At first start	Frequency search (reduced impact restart)	
10, (12)*1	At every start	Frequency search	
11	At every start	Reduced voltage start	
13	At every start	Frequency search (reduced impact restart)	

*1 The same operation is performed for the both settings.

◆ Restart operation with frequency search (Pr.162 = "0, 2, 3, 10, 12, or 13", Pr.299)

- When **Pr.162** = "0 (initial value), 2, 3, 10, 12, or 13", the motor speed is detected at a power restoration so that the motor can re-start smoothly.
- The encoder also detects the rotation direction so that the inverter can re-start smoothly even during the reverse rotation.
- Whether or not to detect the rotation direction can be selected by **Pr.299 Rotation direction detection selection at restarting**.
  If the motor capacity is different from the inverter capacity, set **Pr.299** = "0" (no rotation direction detection).

- When the rotation direction is detected, the following operation is performed according to **Pr.78 Reverse rotation prevention selection** setting.

Pr.299 setting	Pr.78 setting		
	0	1	2
9999 (initial value)	○	×	×
0	×	×	×
1	○	○	○

○: With rotation direction detection ×: Without rotation direction detection

- By setting "3 or 13" in **Pr.162**, the restart can be made smoother with even less impact than when "0, 2, 10, or 12" is set in **Pr.162**.
  When the inverter is restarted with "3, 13" set in **Pr.162**, offline auto tuning is required. (For details on offline auto tuning of Advanced magnetic flux vector control, refer to page 366, and for details on offline auto tuning of V/F control, refer to page 454.)

V/F control, Advanced magnetic flux vector control

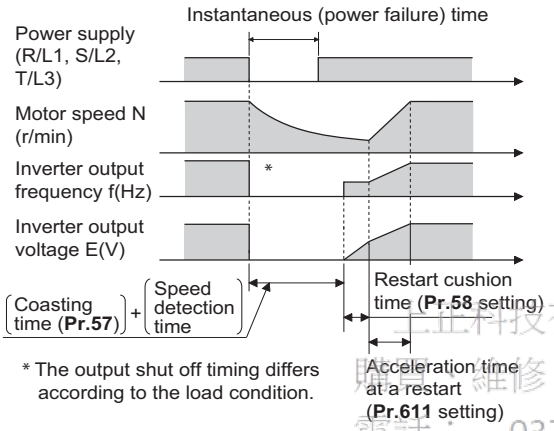

上正科技有限公司
購買 維修 此手冊零組件
電話： 037-466333
Email: service@repairtw.com
Line Id: @2222
www.repairtw.com

NOTE

- The rotation speed detection time (frequency search) changes according to the rotation speed of the motor. (maximum 1 s)
- When the inverter capacity is two ranks or greater than the motor capacity, the overcurrent protective function (E.OC[]) is sometimes activated and prevents the inverter from restarting.
- If two or more motors are connected to one inverter, this function operates abnormally. (The inverter does not restart successfully.)
- Because a DC injection brake is applied instantaneously at speed detection during a restart, the speed might drop if the moment of inertia (J) of the load is small.
- If reverse operation is detected when "1" (reverse rotation disabled) is set to **Pr.78**, operation decelerates by reverse rotation and then changes to forward rotation when the start command is forward rotation. The inverter does not restart when the start command is reverse rotation.
- When "3 or 13" is set to **Pr.162**, limit the wiring length to within 100 m.

◆ Restart operation without frequency search (Pr.162 = "1 or 11")

- When **Pr.162** = "1 or 11", reduced voltage start is used for the restart operation. In this method, the voltage is raised gradually while keeping the output frequency level at the level before an instantaneous power failure, regardless of the motor's coasting speed.

V/F control, Advanced magnetic flux vector control

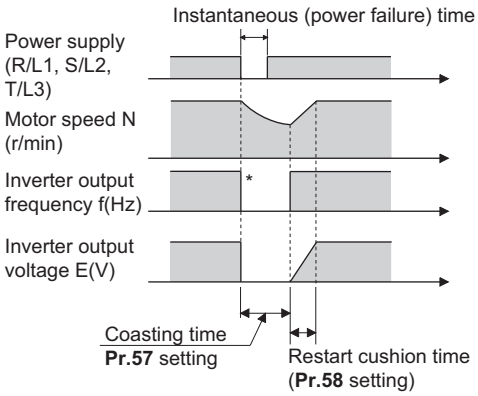

* The output shut off timing differs according to the load condition.

NOTE

- This restart method uses the output frequency that was active before the instantaneous power failure stored in memory. If the instantaneous power failure time is 0.2 second or more, the output frequency can no longer be stored and held in memory, so the restart is performed from **Pr.13 Starting frequency** (initial value: 0.5 Hz).

上正科技有限公司
購買、維修 此手冊零組件
電話： 037-466333
Email: service@repairtw.com
www.repairtw.com

◆ Restart at every start (Pr.162 = "10 to 13")

- When "10 to 13" is set in **Pr.162**, a restart operation is performed at each start and automatic restart after instantaneous power failure (**Pr.57** start after the reset time has elapsed). When "0 (initial value) to 3" is set in **Pr.162**, a restart operation is performed at the first start after a power-ON, and from the second power-ON onwards, a start from the starting frequency is performed.

◆ Automatic restart operation of the MRS (X10) signal

- The restart operation after restoration from output shutoff by the MRS (X10) signal is as shown in the following table according to the **Pr.30** setting.

Pr.30 setting	Operation after restoration from output shutoff by the MRS (X10) signal
2, 10, 11, 102, 110, 111	Restart operation (starting from the coasting speed)
Other than the above	Starting from **Pr.13 Starting frequency**.

NOTE

- When output is shut off using safety stop function (terminals S1 and S2), the inverter restarts in the same way as when output is shut off by the MRS (X10) signal.

◆ Adjustment of restart coasting time (Pr.57)

- Coasting time is the time from the motor speed detection to the restart operation start.
- To enable restart operation, set "0" to **Pr.57 Restart coasting time**. If "0" is set to **Pr.57**, the coasting time is automatically set to the following value (unit: s). Generally, this setting does not interfere with inverter operation.

Pr.162 setting	200 V class: FR-F820-[]			
	00046(0.75K), 00077(1.5K)	00105(2.2K) to 00340(7.5K)	00490(11K) to 02330(55K)	03160(75K) or higher
	400 V class: FR-F840-[]			
	00023(0.75K), 00038(1.5K)	00052(2.2K) to 00170(7.5K)	00250(11K) to 01160(55K)	01800(75K) or higher
Other than 3, 13	0.5	1	3	5
3, 13	1	2	3	5

- Inverter operation is sometimes hindered by the size of the moment of inertia (J) of the load or running frequency. Adjust this coasting time within the range 0.1 s to 30 s to match the load specification.

- Set the waiting time when the sine wave filter is used (**Pr.72 PWM frequency selection** = "25") to 3 seconds or more.

◆ Restart cushion time (Pr.58)

- The cushion time is the time taken to raise the voltage to the level required for the specified speed after the motor speed detection (output frequency before the instantaneous power failure when **Pr.162**= "1 or 11").
- Normally, the motor runs at the initial value as it is. However, adjust to suit the moment of inertia (J) of the load or the size of the torque.

◆ Adjustment of restart operation (Pr.163 to Pr.165, Pr.611)

- The voltage cushion time at a restart can be adjusted by **Pr.163 and Pr.164** as shown in the figure on the left.

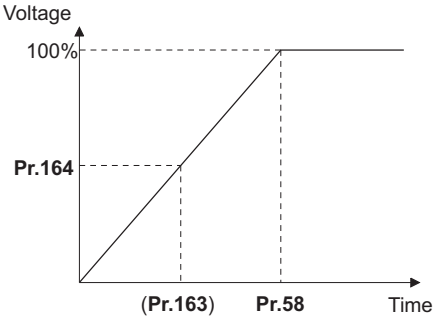

- The stall prevention operation level at a restart operation can be set in **Pr.165**.
- Using **Pr.611**, the acceleration time to reach **Pr.20 Acceleration/deceleration reference frequency** after a restart operation can be set. This can be set individually from the normal acceleration time.

NOTE

- Changing the **Pr.21** setting does not affect the **Pr.611** setting increment.
- Changing the terminal assignment using **Pr.178 to Pr.189 (Input terminal function selection)** may affect the other functions. Set parameters after confirming the function of each terminal.
- When the restart operation is selected, Undervoltage (E.UVT) and Instantaneous power failure (E.IPF) of the fault output signals become invalid.
- The SU and FU signals are not output during the restart. These signals are output after the restart cushion time passes.
- Restart operation is also performed after the inverter reset is released or after the retry by the retry function occurs.

上正科技有限公司
購買、維修此手冊零組件
電話： 887-46588
Email： service@repairtw.com
Line id: @zzzz
www.repairtw.com

⚠CAUTION

- **Provide a mechanical interlock for MC1 and MC2. The inverter will be damaged if power supply is input to the inverter output section.**
- **When the automatic restart after instantaneous power failure function is selected, the motor suddenly starts (after reset time passes) when an instantaneous power failure occurs. Stay away from the motor and machinery. Apply the supplied CAUTION stickers to easily visible places when automatic restart after instantaneous power failure has been selected.**

Parameters referred to

Pr.7 Acceleration time, Pr.21 Acceleration/deceleration time increments ☞ page 216
Pr.13 Starting frequency ☞ page 225, page 226
Pr.65, Pr.67 to Pr.69 Retry function ☞ page 261
Pr.78 Reverse rotation prevention selection ☞ page 245
Pr.178 to Pr.189 (Input terminal function selection) ☞ page 355

5.11.13 Automatic restart after instantaneous power failure/flying start with a PM motor

PM

When using the IPM motor MM-EFS or MM-THE4, the inverter operation can be restarted without stopping the motor operation. When the automatic restart after instantaneous power failure function is selected, the motor driving is resumed in the following situations:

- When power comes back ON during inverter driving after an instantaneous power failure

- When the motor is coasting at start

Pr.	Name	Initial value	Setting range	Description
57 **A702**	**Restart coasting time**	9999	0	No waiting time
			0.1 to 30 s	Set the waiting time for the inverter to perform a restart after restoring power due to an instantaneous power failure.
			9999	No restart
162 **A700**	**Automatic restart after instantaneous power failure selection**	0	0, 1, 2, 3	Frequency search only performed at the first start
			10, 11, 12, 13	Frequency search at every start
611 **F003**	**Acceleration time at a restart**	9999	0 to 3600 s	Set the acceleration time to reach **Pr.20 Acceleration/deceleration reference frequency** at restart.
			9999	Standard acceleration time (for example, **Pr.7**) is applied as the acceleration time at restart.

◆ Automatic restart after instantaneous power failure function

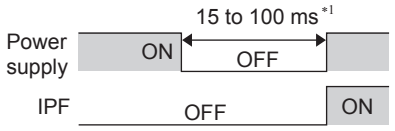

*1 10 to 100 ms for IP55 compatible models

- The inverter output is shut off at the activation of the Instantaneous power failure (E.IPF) or Undervoltage (E.UVT). (Refer to page 568 for E.IPF or E.UVT.)
- When E.IPF or E.UVT is activated, the Instantaneous power failure/undervoltage (IPF) signal is output.
- The IPF signal is assigned to terminal IPF in the initial status. By setting "2 (positive logic) or 102 (negative logic)" in any of **Pr.190 to Pr.196 (Output terminal function selection)**, the IPF signal can be assigned to another terminal.
- When the automatic restart after instantaneous power failure function is selected, motor driving is resumed at the power restoration after an instantaneous power failure or undervoltage. (E.IPF and E.UVT are not activated.)

上正科技有限公司
購買、維修 此手冊零組件
電話： 037-466333
Email: service@repairtw.com
Line id: @zzzz
www.repairtw.com

◆ Connection (CS signal)

- When the Selection of automatic restart after instantaneous power failure / flying start (CS) signal is assigned to the input terminal by setting "6" in **Pr.178 to Pr.189 (Input terminal function selection)**, restart operation is enabled at turn-ON of the CS signal.
- When the CS signal is assigned to an input terminal and **Pr.57 Restart coasting time** ≠ "9999" (with restart), the inverter cannot be operated while the CS signal remains OFF.

NOTE

- Changing the terminal assignment using **Pr.178 to Pr.189 (Input terminal function selection)** may affect the other functions. Set parameters after confirming the function of each terminal.
- If the CS signal is not assigned to any input terminal, solely setting **Pr.57** enables the restart operation at all times.
- If the restart operation is selected, instantaneous power failure (E.IPF) is disabled while the fault output signal is output at an instantaneous power failure.
- The SU and FU signals are not output during the restart. These signals are output after the restart cushion time passes.
- Restart operation is also performed after the inverter reset is released or after the retry by the retry function occurs.

◆ Selection of restart operation (Pr.162)

- At a power restoration, the encoder detects the motor speed by a frequency search so that the inverter can re-start smoothly.
- The encoder also detects the rotation direction so that the inverter can re-start smoothly even during the reverse rotation.

- When "10 (11, 12, 13)" is set in **Pr.162**, a restart operation is performed at each start and automatic restart after instantaneous power failure. When "0 (1, 2)" is set in **Pr.162**, a restart operation is performed at the first start after a power-ON, and from the second power-ON onwards, a start from the starting frequency is performed.

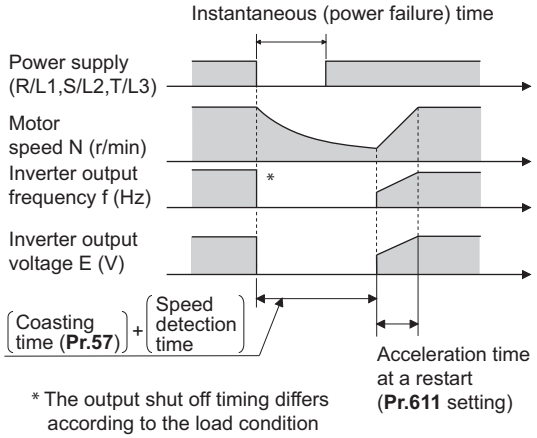

NOTE

- Because a DC injection brake is applied instantaneously at speed detection during a restart, the speed might drop if the moment of inertia (J) of the load is small.
- Restart operation with reduced voltage is not available for PM motor control.

◆ Restart coasting time (Pr.57)

- Coasting time is the time from the motor speed detection to the restart operation start.
- To enable restart operation, set "0" (no coasting time) in **Pr.57 Restart coasting time**. Generally, this setting does not interfere with inverter operation.
- Inverter operation is sometimes hindered by the size of the moment of inertia (J) of the load or running frequency. Adjust this coasting time within the range 0.1 s to 30 s to match the load specification.

上正科技有限公司
購買、維修 此手冊零組件
電話： 037-466333
Email: service@repairtw.com
Line Id: @2222
www.repairtw.com

◆ Adjustment of restart operation (Pr.611)

- Using **Pr.611**, the acceleration time to reach **Pr.20 Acceleration/deceleration reference frequency** after a restart operation can be set. This can be set individually from the normal acceleration time.

NOTE

- Changing the **Pr.21 Acceleration/deceleration time increments** setting does not affect the **Pr.611** setting increment.
- An IPM motor is a motor with interior permanent magnets. Regression voltage is generated when the motor coasts at an instantaneous power failure or at a flying start. The inverter's DC bus voltage rises if the motor coasts fast or makes a flying start in this condition.
  When using the automatic restart after instantaneous power failure function (**Pr.57** ≠ "9999"), it is recommended to also use the regenerative avoidance function (**Pr.882 Regeneration avoidance operation selection** = "1") to make startups stable. If the overvoltage protective function (E.OV[]) still occurs with the regeneration avoidance function, also use the retry function (**Pr.67**).
- During PM motor control, the function of the automatic restart after instantaneous power failure works only when an IPM motor MM-EFS or MM-THE4 is connected.
  When a regeneration unit is used, the frequency search may not be available if the rotation speed is about 10% higher than the rated speed.

⚠CAUTION

- An IPM motor is a motor with interior permanent magnets. High voltage is generated at motor terminals while the motor is running.
  Do not touch motor terminals and other parts until the motor stops to prevent an electric shock.
- When the automatic restart after instantaneous power failure function is selected, the motor suddenly starts (after reset time passes) when an instantaneous power failure occurs.
  Stay away from the motor and machinery.
  Apply the supplied CAUTION stickers to easily visible places when automatic restart after instantaneous power failure has been selected.

Parameters referred to

Pr.13 Starting frequency ☞ page 225, page 226
Pr.65, Pr.67 to Pr.69 Retry function ☞ page 261
Pr.78 Reverse rotation prevention selection ☞ page 245
Pr.178 to Pr.189 (Input terminal function selection) ☞ page 355
Pr.882 Regeneration avoidance operation selection ☞ page 545

5.11.14 Offline auto tuning for a frequency search

V/F PM

Under V/F control or when driving the IPM motor MM-EFS or MM-THE4, the accuracy of the "frequency search", which is used to detect the motor speed for the automatic restart after instantaneous power failure and flying start, can be improved.

Pr.	Name	Initial value	Setting range	Description
162 A700	**Automatic restart after instantaneous power failure selection**	0	0 (2)	Frequency search only performed at the first start
			1	Reduced voltage start only at the first start (no frequency search)
			3	Frequency search only performed at the first start (reduced impact restart)
			10 (12)	Frequency search at every start
			11	Reduced voltage start at every start (no frequency search)
			13	Frequency search at every start (reduced impact restart)
298 A711	**Frequency search gain**	9999	0 to 32767	The offline auto tuning automatically sets the gain required for the frequency search.
			9999	The constant value of Mitsubishi Electric motor (SF-PR, SF-JR, SF-HR, SF-JRCA, SF-HRCA, MM-EFS, or MM-THE4) is used.
560 A712	**Second frequency search gain**	9999	0 to 32767	The offline auto tuning automatically sets the gain required for the frequency search of the second motor.
			9999	The constant value of Mitsubishi Electric motor (SF-PR, SF-JR, SF-HR, SF-JRCA, SF-HRCA, MM-EFS, or MM-THE4) is used for the second motor.
96 C110	**Auto tuning setting/ status**	0	0	No offline auto tuning
			1, 101	Offline auto tuning is performed under Advanced magnetic flux vector control. (Refer to page 366.)
			11	Offline auto tuning is performed without rotating the motor (V/F control, PM motor control (IPM motor MM-EFS/MM-THE4)).
90 C120	**Motor constant (R1)**	9999	0 to 50 Ω, 9999*1	Tuning data (The value measured by offline auto tuning is automatically set.) 9999: The constant value of Mitsubishi Electric motor (SF-PR, SF-JR, SF-HR, SF-JRCA, SF-HRCA and so on) is used.
			0 to 400 mΩ, 9999*2	
463 C210	**Second motor auto tuning setting/status**	0	0	No auto tuning for the second motor.
			1, 101	Offline auto tuning is performed for the second motor. (Refer to page 366.)
			11	Offline auto tuning is performed without rotating the second motor (V/F control, PM motor control (IPM motor MM-EFS/MM-THE4)).
458 C220	**Second motor constant (R1)**	9999	0 to 50 Ω, 9999*1	Tuning data of the second motor (same as **Pr.90**)
			0 to 400 mΩ, 9999*2	

*1 For the FR-F820-02330(55K) or lower and FR-F840-01160(55K) or lower.
*2 For the FR-F820-03160(75K) or higher and FR-F840-01800(75K) or higher.

上正科技有限公司
購買、維修 此手冊零組件
電話： 037-466333
Email: service@repairtw.com
Line id: @zzzz
www.repairtw.com

◆ Offline auto tuning for a frequency search (reduced impact restart)

- When the frequency search (reduced impact restart) is selected by setting **Pr.162 Automatic restart after instantaneous power failure selection** = "3 or 13", perform offline auto tuning.

◆ Before performing offline auto tuning

Check the following points before performing offline auto tuning:

- Check that V/F control or PM motor control (IPM motor MM-EFS or MM-THE4) is selected.
- Check that a motor is connected. (Check that the motor is not rotated by an external force during tuning.)
- Select a motor with the rated current equal to or less than the inverter rated current. (The motor capacity must be 0.4 kW or higher.)

  If a motor with substantially low rated current compared with the inverter rated current is used, speed and torque accuracies may deteriorate due to torque ripples, etc. Set the rated motor current to about 40% or higher of the inverter rated current.
- The target motor is other than a high-slip motor, a high-speed motor, or a special motor.
- The motor may rotate slightly even if the offline auto tuning without motor rotation (**Pr.96 Auto tuning setting/status** = "11") is selected. Fix the motor securely with a mechanical brake, or before tuning, make sure that it is safe even if the motor rotates. (Caution is required especially in vertical lift applications.) Note that even if the motor runs slightly, tuning performance is unaffected.
- Offline auto tuning is not performed correctly when the surge voltage suppression filter (FR-ASF-H/FR-BMF-H) and sine wave filter (MT-BSL/BSC) are inserted between the inverter and motor. Be sure to remove them before performing tuning.

◆ Setting

1. Set "11" in **Pr96 Auto tuning setting/status**.

2. Set the rated motor current (initial value is the inverter rated current) in **Pr.9 Electronic thermal O/L relay**. (Refer to page 252.)

3. Set **Pr.71 Applied motor** according to the motor to be used.

上正科技有限公司
購買、維修 此手冊零組件
電話： 037-466333
Email: service@repairtw.com
Line ID: @777
www.repairtw.com

Motor		Pr.71 setting
Mitsubishi Electric standard motor Mitsubishi Electric high-efficiency motor	SF-JR, SF-TH	0 (3, 4)
	SF-JR 4P 1.5 kW or lower	20 (23, 24)
	SF-HR	40 (43, 44)
	Others	0 (3, 4)
Mitsubishi Electric constant-torque motor	SF-JRCA 4P, SF-TH (constant-torque)	1 (13, 14)
	SF-HRCA	50 (53, 54)
	Others (SF-JRC, etc.)	1 (13, 14)
Mitsubishi Electric high-performance energy-saving motor	SF-PR	70 (73, 74)
Mitsubishi Electric IPM motor	MM-EFS (1500 r/min specification) / MM-THE4	210 (213, 214)
	MM-EFS (3000 r/min specification)	240 (243, 244)
Other manufacturer's standard motor	—	0 (3, 4)
Other manufacturer's constant-torque motor	—	1 (13, 14)

◆ Performing tuning

Point

- Before performing tuning, check the monitor display of the operation panel or parameter unit if the inverter is in the state ready for tuning. The motor starts by turning ON the start command while tuning is unavailable.

- In the PU operation mode, press FWD / REV on the operation panel.

  For External operation, turn ON the start command (STF signal or STR signal). Tuning starts. (At this time, excitation noise occurs.)

NOTE

- It takes about 10 s for tuning to complete. (The time depends on the inverter capacity and motor type.)
- Satisfy the required inverter start conditions to start offline auto tuning. For example, stop the input of the MRS signal.
- To force tuning to end, use the MRS or RES signal or STOP RESET on the operation panel.
  (Turning OFF the start signal (STF signal or STR signal) also ends tuning.)
- During offline auto tuning, only the following I/O signals are valid (initial value).
  Input terminals <valid signals>: STP (STOP), OH, MRS, RT, RES, STF, STR, S1, and S2
  Output terminals: RUN, OL, IPF, FM/CA, AM, A1B1C1, and So (SO)
- When the rotation speed and the output frequency are selected for terminals FM/CA and AM, the progress status of offline auto tuning is output in 15 steps from FM/CA and AM.
- Do not perform ON/OFF switching of the Second function selection (RT) signal during offline auto tuning. Auto tuning will not be performed properly.
- Since the RUN signal turns ON when tuning is started, pay close attention especially when a sequence which releases a mechanical brake by the RUN signal has been designed.
- When executing offline auto tuning, input the operation command after switching ON the main circuit power (R/L1, S/L2, T/L3) of the inverter.
- While **Pr.79 Operation mode selection** = "7", turn the PU operation external interlock (X12) signal ON to tune in the PU operation mode.

- During tuning, the monitor is displayed on the operation panel as follows.

Status	Operation panel (FR-DU08) display	LCD operation panel (FR-LU08) display
Setting		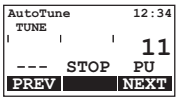
Tuning in progress	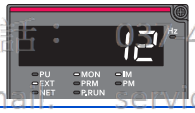	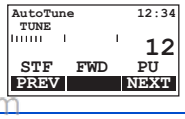
Normal end	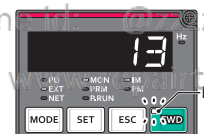	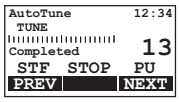

上正科技有限公司
購買、維修 此手冊零組件
電話： 02-2466333
Email: service@repairtw.com
Line id: @zzz
www.repairtw.com

- When offline auto tuning ends, press STOP RESET on the operation panel during PU operation. For External operation, turn OFF the start signal (STF signal or STR signal). This operation resets the offline auto tuning, and the PU's monitor display returns to the normal indication. (Without this operation, next operation cannot be started.)
- At tuning completion, the tuning results are set in the following parameters:

Parameter	Name
90	Motor constant (R1)
298	Frequency search gain
96	Auto tuning setting/status

NOTE

- The motor constants measured once during offline auto tuning are stored as parameters and their data are held until offline auto tuning is performed again. However, the tuning data is cleared when performing All parameter clear.

- If offline auto tuning has ended in error, motor constants are not set.

Perform an inverter reset and restart tuning.

Error display	Error cause	Countermeasures
8	Forced end	Set "11" in **Pr.96** and retry.
9	Inverter protective function operation	Make the setting again.
91	The current limit (stall prevention) function is activated.	Set the acceleration/deceleration time longer. Set **Pr.156 Stall prevention operation selection** = "1".
92	The converter output voltage fell to 75% of the rated voltage.	Check for the power supply voltage fluctuation.
93	Calculation error. The motor is not connected.	Check the motor wiring and make the setting again.
94	Rotation tuning frequency setting error. (The frequency command for the tuning was given to exceed the maximum frequency setting, or to be in the frequency jump range.)	Check the **Pr.1 Maximum frequency** and **Pr.31 to Pr.36 Frequency jump** settings.

- When tuning is ended forcibly by pressing STOP RESET or turning OFF the start signal (STF or STR) during tuning, offline auto tuning does not end properly. (The motor constants have not been set.)
  Perform an inverter reset and restart tuning.
- If the rated power supply of the motor is 200/220 V (400/440 V) 60 Hz, set the rated motor current multiplied by 1.1 in **Pr.9**Electronic thermal O/L relay after tuning is complete.
- For a motor with a PTC thermistor, thermal protector or other thermal detection, set "0" (motor overheat protection by inverter invalid) in **Pr.9** to protect the motor from overheating.

NOTE

- An instantaneous power failure occurring during tuning will result in a tuning error. After power is restored, the inverter starts normal operation. Therefore, when the STF (STR) signal is ON, the motor starts forward (reverse) rotation.
- Any fault occurring during tuning is handled as in the normal operation. However, if the retry function is set, no retry is performed.
- The set frequency monitor displayed during the offline auto tuning is 0 Hz.

上正科技有限公司
購買、維修、比手用零組件
電話： 037-466333
Email: service@repairtw.com
Line Id: @2222
www.repairtw.com

◆ Tuning the second motor (Pr.463)

- When one inverter switches the operation between two different motors, set the second motor in **Pr.450 Second applied motor**, set **Pr.463 Second motor auto tuning setting/status** = "11", and perform tuning of the second motor.
- Turning ON the RT signal enables the parameter settings for the second motor as shown in the following table.

Function	RT signal-ON (second motor)	RT signal-OFF (first motor)
Motor constant (R1)	**Pr.458**	**Pr.90**
Frequency search gain	**Pr.560**	**Pr.298**
Auto tuning setting/status	**Pr.463**	**Pr.96**

NOTE

- The RT signal is assigned to terminal RT in the initial status. Set "3" in one of **Pr.178 to Pr.189 (Input terminal function selection)** to assign the RT signal to another terminal.
- Changing the terminal assignment using **Pr.178 to Pr.189 (Input terminal function selection)** may affect the other functions. Set parameters after confirming the function of each terminal.

⚠CAUTION

- Note that the motor may start running suddenly.
- For the offline auto tuning in vertical lift applications, etc., caution is required to avoid falling due to insufficient torque.

Parameters referred to

Pr.9 Electronic thermal O/L relay ☞ page 252
Pr.65, Pr.67 to Pr.69 Retry function ☞ page 261
Pr.71 Applied motor, Pr.450 Second applied motor ☞ page 362
Pr.79 Operation mode selection ☞ page 228
Pr.156 Stall prevention operation selection ☞ page 273
Pr.178 to Pr.189 (Input terminal function selection) ☞ page 355

5.11.15 Power failure time deceleration-to-stop function

At instantaneous power failure or undervoltage, the motor can be decelerated to a stop or to the set frequency for the re-acceleration.

Pr.	Name	Initial value		Setting range	Description
		FM	CA		
261 **A730**	**Power failure stop selection**	0		0	Power failure time deceleration-to-stop function disabled
				1, 2, 11, 12, 21, 22	Power failure time deceleration-to-stop function enabled. Select action at an undervoltage or when a power failure occurs.
262 **A731**	**Subtracted frequency at deceleration start**	3 Hz		0 to 20 Hz	Normally, the motor runs at the initial value as it is. However, adjust to suit the size of the load specification (moment of inertia, torque).
263 **A732**	**Subtraction starting frequency**	60 Hz	50 Hz	0 to 590 Hz	When output frequency ≥ **Pr.263**: The motor decelerates if the output frequency decreases by the frequency set in **Pr.262**. When output frequency < **Pr.263**: The motor decelerates at frequencies of the output frequency.
				9999	The motor decelerates from the output frequency - **Pr.262**.
264 **A733**	**Power-failure deceleration time 1**	5 s		0 to 3600 s	Set the slope applicable from the deceleration start to the **Pr.266** set frequency.
265 **A734**	**Power-failure deceleration time 2**	9999		0 to 3600 s	Set the slope applicable for the frequency range starting at **Pr.266** and downward.
				9999	Same as **Pr.264**.
266 **A735**	**Power failure deceleration time switchover frequency**	60 Hz	50 Hz	0 to 590 Hz	Set the frequency at which the slope during deceleration switches from the **Pr.264** setting to the **Pr.265** setting.
294 **A785**	**UV avoidance voltage gain**	100%		0 to 200%	Adjust the response at undervoltage avoidance operation. Setting a large value improves the response to changes in the bus voltage.
668 **A786**	**Power failure stop frequency gain**	100%		0 to 200%	Adjust the response level for the operation where the deceleration time is automatically adjusted.
606 **T722**	**Power failure stop external signal input selection**	1		0	Normally open input (NO contact input specification)
				1	Normally closed input (NC contact input specification)

上正科技有限公司
購買、維修 此電郵或聯絡
電話： 037-466333
Email: service@repairtw.com
Line Id: @zzzz
www.repairtw.com

◆ Connection and parameter setting

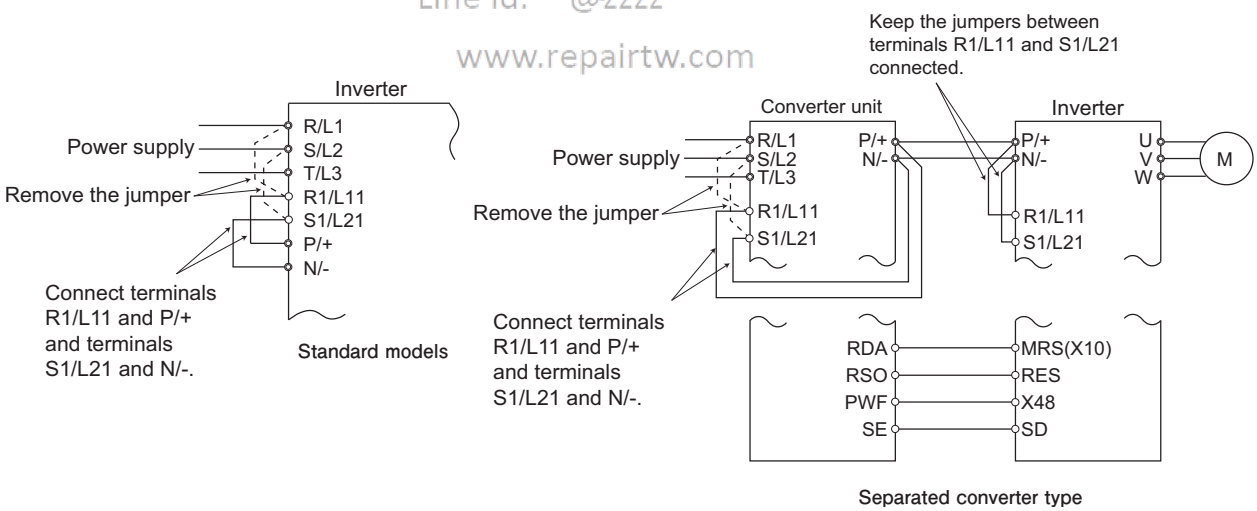

- For the standard model, remove the jumpers between terminals R/L1 and R1/L11 and terminals S/L2 and S1/L21, and connect terminals R1/L11 and P/+ and terminals S1/L21 and N/-.
- If an undervoltage, power failure or input phase loss occurs when **Pr.261 Power failure stop selection** ≠ "0", the motor decelerates to a stop.

- The power failure time deceleration-to-stop function operates as follows at an input phase loss.

Pr.261	Pr.872	Operation when an input phase loss occurs
0	0	Operation continues
	1	Input phase loss (E.ILF)
1, 2	0	Operation continues
	1	Deceleration stop
21, 22	—	Deceleration stop

- For the separated converter type, remove the jumpers between terminals R/L1 and R1/L11 and terminals S/L2 and S1/L21 of the converter unit, and connect terminals R1/L11 and P/+ and terminals S1/L21 and N/-. Do not remove the jumpers of terminal R1/L11 and terminal S1/L21 of the inverter. (In the initial status of the separated converter type, terminals P/+ and R1/L11 and terminals N/- and S1/L21 are connected.)
- For the separated converter type, connect the terminal to which the PWF signal of the converter unit is assigned and the terminal to which the X48 signal of the inverter is assigned. Also, set **Pr.261**of the converter unit in accordance with the inverter setting. (Refer to the Instruction Manual of the converter unit.)

◆ Outline of operation of deceleration stop at a power failure

- If an undervoltage or power failure occurs, the output frequency is turned OFF only for the frequency set to **Pr.262 Subtracted frequency at deceleration start**.
- The motor decelerates for the time set to **Pr.264 Power-failure deceleration time 1**. (The deceleration time setting is the time it takes for the motor to stop from **Pr.20 Acceleration/deceleration reference frequency**.)
- Change the deceleration time (slope) to stop using **Pr.265 Power-failure deceleration time 2** when the frequency is too low to obtain the regenerative energy or in other instances.

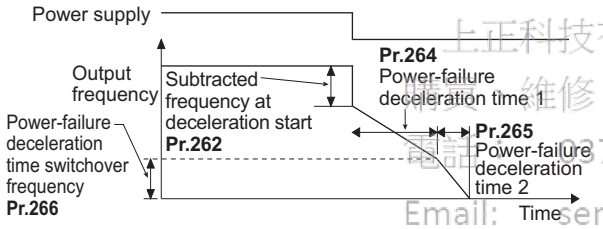

上正科技有限公司
購買 維修 此手冊零組件
電話: 886-2-27-466333
Email: service@repairtw.com
www.repairtw.com

◆ Action setting at undervoltage and power failure

- Set **Pr.261** to select the action at an undervoltage and power failure.

Pr.261 setting	Action at undervoltage and power failure	Power restoration during deceleration at occurrence of power failure	Deceleration stop time	Undervoltage avoidance function
0	Coasts to stop	Coasts to stop	—	—
1	Deceleration stop	Deceleration stop	According to **Pr.262 to Pr.266** setting	Not available
2		Re-acceleration		Not available
11		Deceleration stop		Available
12		Re-acceleration		Available
21		Deceleration stop	Automatic adjustment of deceleration time	Not available
22		Re-acceleration		Not available

◆ Power failure stop function (Pr.261 = "1, 11, or 21")

- Even if power is restored during deceleration triggered by a power failure, deceleration stop is continued after which the inverter stays stopped. To restart operation, turn the start signal OFF then ON again.

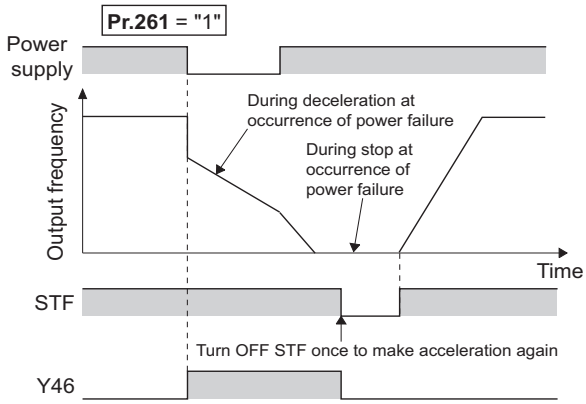

NOTE

- If the automatic restart after instantaneous power failure is selected (**Pr.57 Restart coasting time** ≠ "9999") while the power failure time deceleration-to-stop function is set enabled (**Pr.261** = "1, 11, or 21"), the power failure time deceleration stop function is disabled.
- When the power failure time deceleration-to-stop function is enabled (**Pr.261** = "1, 11 or 21"), the inverter does not start even if the power is turned ON or inverter reset is performed with the start signal (STF/STR) ON. Turn OFF the start signal once and then ON again to make a start.

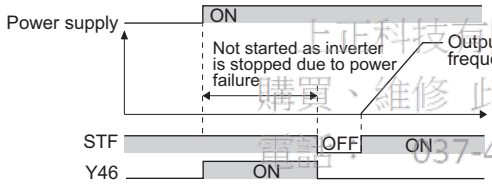

上正科技有限公司
購買、維修 此手冊零組件
電話： 037-466333
Email: service@repairtw.com
Line id: @zzzz
www.repairtw.com

◆ Continuous operation function at instantaneous power failure (Pr.261 = "2, 12, or 22")

- The motor re-accelerates to the set frequency when the power restores during the deceleration triggered by a power failure.
- Combining with the automatic restart after instantaneous power failure function enables a deceleration triggered by a power failure and re-acceleration at a power restoration.
  If the power is restored after stoppage by a power failure, a restart operation is performed when automatic restart after instantaneous power failure (**Pr.57** ≠ "9999") is selected.

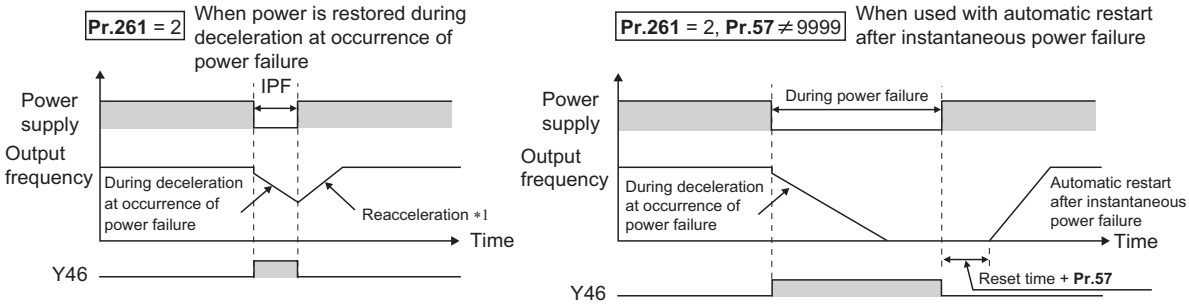

*1 Acceleration time depends on **Pr.7 (Pr.44)**

◆ Undervoltage avoidance function (Pr.261 = "11 or 12", Pr.294)

- When "11 or 12" is set to **Pr.261**, the deceleration time is adjusted (shortened) to prevent an undervoltage from occurring during deceleration at occurrence of power failure.
- Adjust the downward frequency slope and the response level using **Pr.294 UV avoidance voltage gain**. Setting a large value improves the response to the bus voltage.

◆ Automatic adjustment of deceleration time (Pr.261 = "21 or 22", Pr.294, Pr.668)

- When "21 or 22" is set to **Pr.261**, the deceleration time is automatically adjusted to keep (DC bus) voltage constant in the converter when the motor decelerates to a stop at a power failure. Setting of **Pr.262 to Pr.266** is not required.
- If a phenomenon such as motor vibration occurs during operation of the deceleration time automatic adjustment function, adjust the response level by setting the **Pr.668 Power failure stop frequency gain**. Increasing the setting improves the response to change in the bus voltage. However, the output frequency may become unstable.
- If setting **Pr.294 UV avoidance voltage gain** lower also does not suppress the vibration, set **Pr.668** lower.

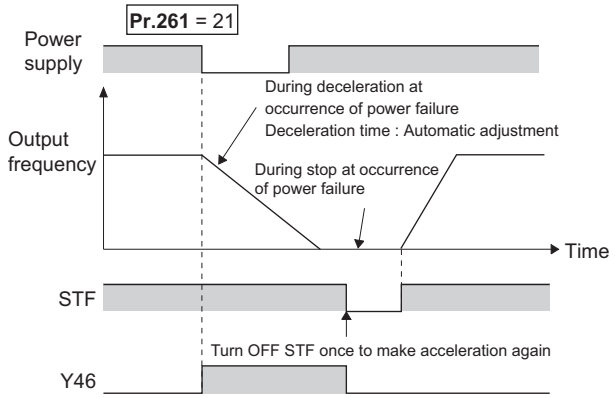

◆ Deceleration stop by the Power failure stop external(X48) signal

- By turning OFF X48 signal, the power failure time deceleration-to-stop function is activated. This function is used, for example, when an external power failure detection circuit is installed.
- To use the power failure time deceleration-to-stop function for the separated converter type, use X48 signal. Connect the terminal to which the PWF signal of the converter unit is assigned and the terminal to which the X48 signal of the inverter is assigned.
- In the initial setting, the X48 signal is used with the normally closed (NC contact) input specification. Use **Pr.606 Power failure stop external signal input selection** to change the specification to the normally open (NO contact) input.
- To use the X48 signal, set "48" in any of **Pr.178 to Pr.189 (Input terminal function selection)** to assign the function to an input terminal.

上可科技有限公司
購買、維修 此手冊零組件
電話： 037-466333
Email: service@repairtw.com
Line Id: @2222
www.repairtw.com

◆ During deceleration at occurrence of power failure (Y46) signal

- After deceleration by a power failure, the inverter is not restarted even though the start command is input. Check the During deceleration at occurrence of power failure (Y46) signal at a power failure. (For example, when input phase loss protection (E.ILF) occurs.)
- The Y46 signal is turned ON during deceleration at occurrence of power failure and in a stop status after deceleration at occurrence of power failure.
- For the Y46 signal, set "46 (positive logic)" or "146 (negative logic)" in any of **Pr.190 to Pr.196 (Output terminal function selection)** to assign the function.

◆ Power failed (Y67) signal

- Y67 signal turns ON when the output is shut off due to detection of power failure (power supply fault) or undervoltage, or the power failure time deceleration-to-stop function is activated.
- To use the Y67 signal, assign the function by setting "67 (positive logic)" or "167 (negative logic)" in any of **Pr.190 to Pr.196 (output terminal function selection)**.

NOTE

- When "2" is set to **Pr.30 Regenerative function selection** (when the FR-HC2 or FR-CV is used), the deceleration stop function is invalid at a power failure.
- If the "output frequency - **Pr.262**" at undervoltage or at power failure is a negative value, it is regarded as 0 Hz. (DC injection brake operation is performed without deceleration.)
- The power failure time deceleration stop function is disabled during a stop or when the breaker is tripped.
- The Y46 signal turns ON if an undervoltage occurs even if a deceleration at a power failure has not occurred. For this reason, the Y46 signal is sometimes output instantaneously when the power supply is turned OFF, but this is not a fault.
- When the power failure time deceleration-to-stop function is selected, undervoltage protection (E.UVT), instantaneous power failure protection (E.IPF) and input phase loss protection (E.ILF) are invalid.
- When the load is high during PM motor control, an undervoltage sometimes causes the inverter to coast to a stop.
- Changing the terminal assignment using **Pr.178 to Pr.189 (Input terminal function selection) and Pr.190 to Pr.196 (Output terminal function selection)** may affect the other functions. Set parameters after confirming the function of each terminal.

⚠CAUTION

- Even if the power failure time deceleration-to-stop function is set, some loads might cause the inverter to trip and the motor to coast.
  The motor coasts if sufficient regenerative power is not obtained from the motor.

Parameters referred to

Pr.12 DC injection brake operation voltage ☞ page 535
Pr.20 Acceleration/deceleration reference frequency, Pr.21 Acceleration/deceleration time increments ☞ page 216
Pr.30 Regenerative function selection ☞ page 539
Pr.57 Restart coasting time ☞ page 446, page 451
Pr.190 to Pr.196 (Output terminal function selection) ☞ page 312
Pr.872 Input phase loss protection selection ☞ page 260

上正科技有限公司
購買、維修 此手冊零組件
電話： 07-466333
Email： service@repairtw.com
Line id: @zzzz
www.repairtw.com

5.11.16 PLC function

The inverter can be run in accordance with a sequence program.
In accordance with the machine specifications, a user can set various operation patterns: inverter movements at signal inputs, signal outputs at particular inverter statuses, and monitor outputs, etc.

Pr.	Name	Initial value	Setting range	Description	
414 **A800**	**PLC function operation selection**	0	0	PLC function disabled	
			1, 11	PLC function enabled	The SQ signal is enabled by input from a command source (external input terminal/ communication).
			2, 12		The SQ signal is enabled by input from an external input terminal.
415 **A801**	**Inverter operation lock mode setting**	0	0	The inverter start command is enabled regardless of the operating status of the sequence program.	
			1	The inverter start command is enabled only while the sequence program is running.	
416 **A802**	**Pre-scale function selection**	0	0 to 5	Unit scale factor 0: No function 1: ×1 2: ×0.1 3: ×0.01 4: ×0.001 5: ×0.0001	When the pulse train is input from terminal JOG, the number of sampling pulses can be converted. The result of conversion is stored to SD1236. Number of sampled pulses = Input pulse value per count cycle × Pre-scale setting value **(Pr.417)** × Unit scale factor **(Pr.416)**
417 **A803**	**Pre-scale setting value**	1	0 to 32767	Pre-scale setting value	
498 **A804**	**PLC function flash memory clear**	0	0, 9696 (0 to 9999)	0: Clears the flash memory fault display (no operation after writing while the flash memory is in normal operation).	Write
				9696: Clears the flash memory (no operation after writing while the flash memory is at a fault).	
				Other than 0 and 9696: Outside the setting range	
				0: Normal display	Read
				1: The flash memory is not cleared because the PLC function is enabled.	
				9696: During flash memory clearing operation or flash memory fault	
675 **A805**	**User parameter auto storage function selection**	9999	1	Auto storage function enabled	
			9999	Auto storage function disabled	
1150 to 1199 **A810 to A859**	**User parameters 1 to User parameters 50**	0	0 to 65535	Desired values can be set. Because devices D206 to D255 used by the PLC function can be mutually accessed, the values set to **Pr.1150 to Pr.1199** can be used by the sequence program. The result of performing calculation by a sequence program can also be monitored by **Pr.1150 to Pr.1199**.	

上正科技有限公司
購買、維修 此手機零組件
電話： 037-466333
Email: service@repairtw.com
Line id: @zzzz
www.repairtw.com

◆ Outline of PLC function

- To enable the PLC function, set "1 or 2" in **Pr.414 PLC function operation selection**. When "2" is set in **Pr.414**, the Sequence startup (SQ) signal from the external input terminal is valid regardless of the setting of the **Pr.338 Communication operation command source**. (The **Pr.414** setting change becomes valid after inverter reset.)
- Switch the execution key (RUN/STOP) of the sequence program by turning the SQ signal ON/OFF. The sequence program can be executed by turning the SQ signal ON. To input the SQ signal, set "50" in any of **Pr.178 to Pr.189 (Input terminal function selection)** to assign the function to a terminal.
- When "1" is set in **Pr.415 Inverter operation lock mode setting**, the inverter can be operated only when the sequence program is running. By changing the PLC program status from RUN to STOP during inverter operation, the motor decelerates to stop. To stop the inverter operation at the STOP status of the PLC program while performing auto operation using SD1148 (or SM1200 to 1211) of the PLC program, set **Pr.415** = "1".
- For reading or writing sequence programs, use FR Configurator2 on the personal computer connected to the inverter via RS-485 communication or USB. (When **Pr.414** ≠ "0", sequence programs can be read from or written to FR Configurator2.)

◆ User parameter (data register (D)) auto storage function selection

- Setting **Pr.675** = "1" enables the auto storage function for user parameters.
- The user parameter auto storage function is used to store the setting of **Pr.1195 PLC function user parameters 46** (D251) to **Pr.1199 PLC function user parameters 50** (D255) automatically in EEPROM at power OFF or inverter reset.
- The auto storage function is disabled while the inverter performs any of the following.
  Measurement of the main circuit capacitor's life, offline auto tuning, emergency drive function, measurement of load characteristics, or PID gain tuning

NOTE

- The auto storage function may fail if the EEPROM is accessed by other functions at the same time at power OFF. To ensure the auto storage, provide a power source for the control circuit separately from that of the main circuit.

◆ User parameter reading from EEPROM

- User parameters (**Pr.1150 to Pr.1199**) are read from RAM or EEPROM according to the settings in **Pr.342 Communication EEPROM write selection** and **Pr.414 PLC function operation selection**. When **Pr.414** = "11 or 12", RAM data is read regardless of the **Pr.342** setting.

Device	Pr.342	Pr.414	Read from	Written to
Inverter (via communication), FR Configurator2	0	0, 1, 2	EEPROM	EEPROM
		11, 12	RAM	
	1	0, 1, 2	RAM	RAM
		11, 12	RAM	
Communication option	0	0, 1, 2	(Differs according to the option type.)	EEPROM
		11, 12	RAM	
	1	0, 1, 2	RAM	RAM
		11, 12	RAM	
Parameter unit Operation panel	0	0, 1, 2	EEPROM	EEPROM
		11, 12	RAM	
	1	0, 1, 2	EEPROM	RAM
		11, 12	RAM	

NOTE

- For the details of the PLC function, refer to the PLC Function Programming Manual and the Instruction Manual of FR Configurator2.

上正科技有限公司
購買、維修 此手冊零組件
電話： 037-466333
Email: service@repairtw.com
www.repairtw.com

◆ Copying the PLC function project data to USB memory

- This function copies the PLC function project data to a USB memory device. The PLC function project data copied in the USB memory device can be copied to other inverters. This function is useful in backing up the parameter setting and for allowing multiple inverters to operate by the same sequence programs.
- Refer to page 74 for an outline of the USB communication function.

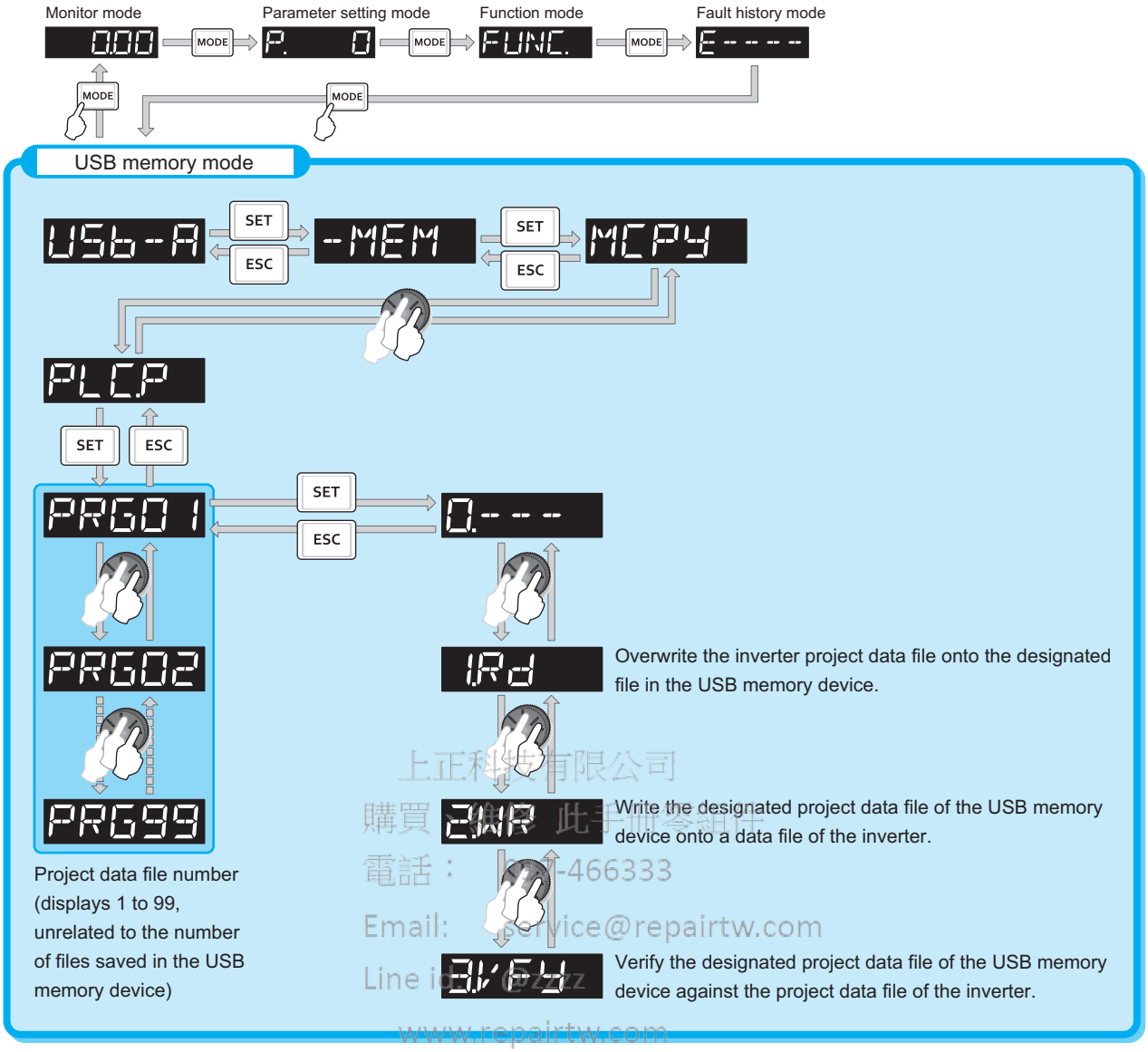

上正科技有限公司
購買 維修 此手冊零組件
電話： 02-466333
Email: service@repairtw.com
Line id: repairtw
www.repairtw.com

- The following data can be copied by copying the project data via USB memory device.

Extension	File type	Copy from inverter to USB memory device	Copy from USB memory device to inverter
.QPA	Parameter file	Supported	Supported
.QPG	Program file	Supported	Supported
.C32	Function block source information	Supported	Supported
.QCD	Global text comment information	Supported	Supported
.DAT	Project management information	Supported	Not available
.TXT	Copy information	Supported	Not available

NOTE

- If the project data of the PLC function is locked with a password using FR Configurator2, copying to the USB memory device and verification are disabled. Also if set to write-disabled, writing to the inverter is disabled. (For the details of the PLC function, refer to the PLC Function Programming Manual and the Instruction Manual of FR Configurator2.)

Parameters referred to

Pr.338 Communication operation command source ☞ page 239

5.11.17 Trace function

- The operating status of the inverter can be traced and saved on a USB memory device.
- Saved data can be monitored by FR Configurator2, and the status of the inverter can be analyzed.

Pr.	Name	Initial value	Setting range	Description
1020 A900	**Trace operation selection**	0	0	Without trace operation
			1	Sampling start
			2	Forced trigger
			3	Sampling stop
			4	Transfer of data to USB memory device
1021 A901	**Trace mode selection**	0	0	Memory mode
			1	Memory mode (automatic transfer)
			2	Recorder mode
1022 A902	**Sampling cycle**	2	0 to 9	Set the sampling cycle. 0: approx. 0.125 ms, 1: approx. 0.25 ms, 2: 1 ms, 3: 2 ms, 4: 5 ms, 5: 10 ms, 6: 50 ms, 7: 100 ms, 8: 500 ms, 9: 1 s (For the setting values "0" and "1", the cycle varies according to the control mode.)
1023 A903	**Number of analog channels**	4	1 to 8	Select the number of analog channels for sampling.
1024 A904	**Sampling auto start**	0	0	Manual sampling start
			1	Sampling starts automatically when the power supply is turned ON or at a reset
1025 A905	**Trigger mode selection**	0	0	Fault trigger
			1	Analog trigger
			2	Digital trigger
			3	Analog or digital trigger (OR logic)
			4	Both analog and digital triggers (AND logic)
1026 A906	**Number of sampling before trigger**	90%	0 to 100%	Set the percentage of the pre-trigger sampling time with respect to the overall sampling time.
1027 A910	**Analog source selection (1ch)**	201	1 to 3, 5 to 14, 17, 18, 20, 23, 24, 34, 40 to 42, 52 to 54, 61, 62, 64, 67 to 69, 81 to 96, 98, 201 to 213, 230 to 232, 237, 238	Select the analog data (monitor item) for sampling on each channel.
1028 A911	**Analog source selection (2ch)**	202		
1029 A912	**Analog source selection (3ch)**	203		
1030 A913	**Analog source selection (4ch)**	204		
1031 A914	**Analog source selection (5ch)**	205		
1032 A915	**Analog source selection (6ch)**	206		
1033 A916	**Analog source selection (7ch)**	207		
1034 A917	**Analog source selection (8ch)**	208		
1035 A918	**Analog trigger channel**	1	1 to 8	Select the analog channel to be the trigger.
1036 A919	**Analog trigger operation selection**	0	0	Sampling starts when the value of the analog monitor exceeds the value set at the trigger level (**Pr.1037**)
			1	Sampling starts when the value of the analog monitor falls below the value set at the trigger level (**Pr.1037**)
1037 A920	**Analog trigger level**	1000	600 to 1400	Set the level at which the analog trigger turns ON. The trigger level is the value obtained by subtracting 1000 from the set value.

上正科技有限公司
購買、維修 此手冊零組件
電話：037-466333
Email: service@repairtw.com
Line id: @zzz
www.repairtw.com

Pr.	Name	Initial value	Setting range	Description
1038 A930	**Digital source selection (1ch)**	1	1 to 255	Select the digital data (I/O signal) for sampling on each channel.
1039 A931	**Digital source selection (2ch)**	2		
1040 A932	**Digital source selection (3ch)**	3		
1041 A933	**Digital source selection (4ch)**	4		
1042 A934	**Digital source selection (5ch)**	5		
1043 A935	**Digital source selection (6ch)**	6		
1044 A936	**Digital source selection (7ch)**	7		
1045 A937	**Digital source selection (8ch)**	8		
1046 A938	**Digital trigger channel**	1	1 to 8	Select the digital channel to be the trigger.
1047 A939	**Digital trigger operation selection**	0	0	Trace starts when the signal turns ON
			1	Trace starts when the signal turns OFF

◆ Operation outline

- This function samples the status (analog monitor and digital monitor) of the inverter, traces the sampling data when a trigger (trace start condition) is generated, and saves the resulting trace data.
- When the trace function is set enabled, samplings are collected and the inverter goes into the pre-trigger status.
- In the pre-trigger status, samples are collected, and the trigger standby status is entered when sufficient samples for the number of pre-trigger samples have been collected.
- When the trigger is generated in the trigger standby status, the trace is started and the trace data is saved.

上正科技有限公司
購買、維修 此手冊零組件
電話： 037-466333
Email: service@repairtw.com
Line id: @zzzz
www.repairtw.com

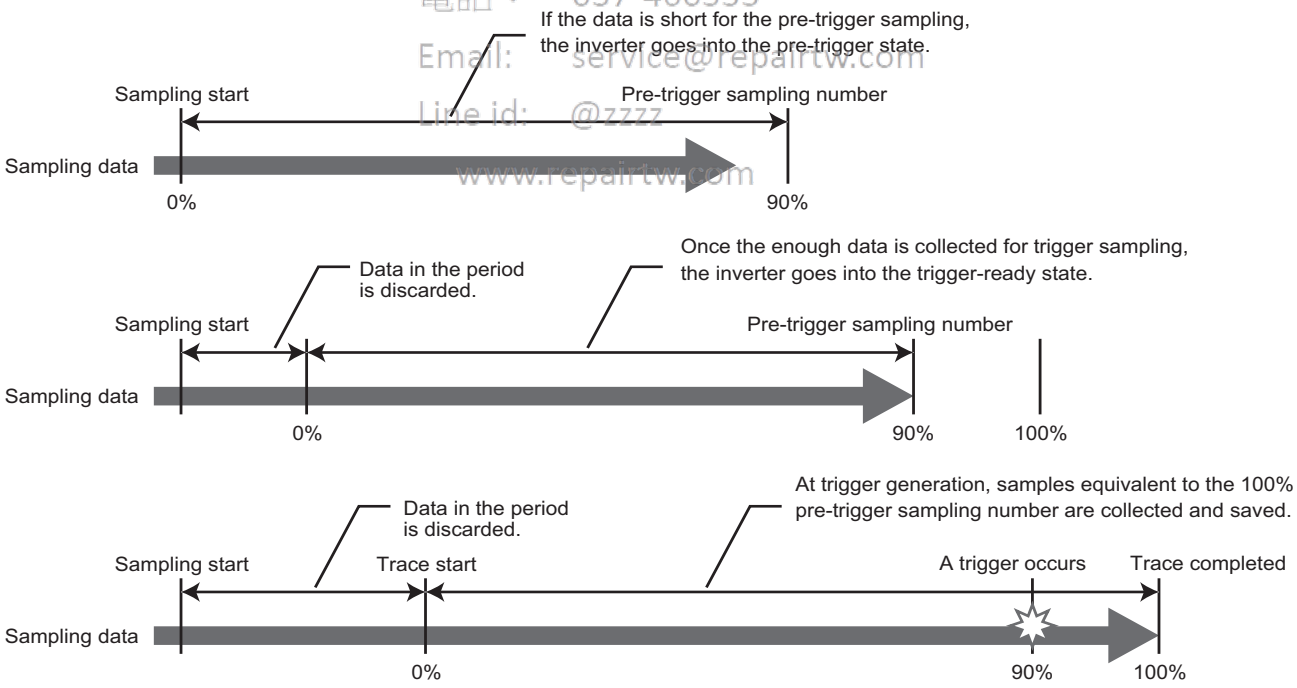

◆ Selection of trace mode (Pr.1021)

- Select how to save the trace data which results from sampling the inverter status.

- There are two trace data save methods, memory mode and recorder mode.

Pr.1021 setting	Mode	Description
0	Memory mode	In this mode, trace data is saved sequentially to internal RAM on the inverter. If automatic transfer is set, the trace data in internal RAM is transferred to USB memory device when the trigger is being generated. Data can be transferred to USB memory device as long as data is held in internal RAM. Trace data in internal RAM is cleared when the power supply is turned OFF or when the inverter is reset.
1	Memory mode (automatic transfer)	
2	Recorder mode	In this mode, trace data is saved directly to USB memory device. Sampling data is fixed at 8 analog channels and 8 digital channels. The sampling cycle in this mode is longer than in the memory mode. (1 ms or longer)

NOTE

- When the trace function is used in the recorder mode, use USB memory device having at least 1 GB of free space.
- Data transferred to USB is saved in the "TRC" folder under the "FR_INV" folder.
- Up to 99 sets of trace data can be saved in the USB memory device. When data transfer to USB memory reaches 99 sets of trace data, data is successively overwritten starting with the older data.
- By using FR Configurator2, the trace data of the internal RAM can be directly transmitted to the personal computer via the USB cable. For details, refer to the Instruction Manual of FR Configurator2.

◆ Setting of sampling cycle (interval) and number of sampling channels (Pr.1022, Pr.1023)

- Set the sampling cycle (interval).
  The shortest cycle in the recorder mode is 1 ms. When the recorder mode is set, sampling is performed at a sampling cycle of 1 ms even if "0 or 1" is set to **Pr.1022 Sampling cycle**.
- When the memory mode is set, the number of analog channels to sample can be set in the **Pr.1023 Number of analog channels**. Start setting from the smaller channel number. Up to 8 channels can be set. The sampling time becomes shorter the more channels are set.
  The number of digital channels is always 8 when the recorder mode is used or when digital channels are used.
- The sampling time differs according to the sampling cycle and the number of sampling channels.

上正科技有限公司
購買、維修 此手冊零組件
電話： 037 466333
Email: service@repairtw.com
Line id: @222
www.repairtw.com

Number of Channels	Memory mode sampling time (per channel)	
	Minimum (Pr.1022 = "0")	Maximum (Pr.1022 = "9")
1	213 ms	1704 s
2	160 ms	1280 s
3	128 ms	1024 s
4	106.5 ms	852 s
5	91 ms	728 s
6	80 ms	640 s
7	71 ms	568 s
8	64 ms	512 s

◆ Analog source (monitor item) selection

- Select the analog sources (monitor items) to be set to **Pr.1027 to Pr.1034** from the following table.

Setting value	Monitor item*1	Minus (-) display*2	Trigger level criterion*3
1	Output frequency/speed		*4
2	Output current		*4
3	Output voltage		*4
5	Frequency setting value/motor speed setting		*4
6	Running speed		*4
7	Motor torque		*4
8	Converter output voltage		*4
9*5	For manufacturer setting		—
10	Electronic thermal O/L relay load factor		*4
11	Output current peak value		*4
12	Converter output voltage peak value		*4
13	Input power		*4
14	Output power		*4
17	Load meter		*4
18	Motor excitation current		*4
20	Cumulative energization time		65535
23	Actual operation time		65535
24	Motor load factor		*4
34	Motor output		*4
40	PLC function user monitor 1	○	*4
41	PLC function user monitor 2	○	*4
42	PLC function user monitor 3	○	*4
52	PID set point		*4
53	PID measured value		*4
54	PID deviation	○	*4
61	Motor thermal load factor		*4
62	Inverter thermal load factor		*4
64	PTC thermistor resistance		**Pr.561**
67	PID measured value 2		*4
68*6	Emergency drive status		65535
69	PID input pressure value		*4
81	BACnet reception status		65535
82	BACnet token pass counter		65535

Setting value	Monitor item*1	Minus (-) display*2	Trigger level criterion*3
83	BACnet valid APDU counter		65535
84	BACnet communication error counter		65535
85	BACnet Terminal FM/CA output level		100%
86	BACnet terminal AM output level		100%
87	Remote output value 1	○	*4
88	Remote output value 2	○	*4
89	Remote output value 3	○	*4
90	Remote output value 4	○	*4
91	PID manipulated amount	○	*4
92	Second PID set point/deviation input selection		*4
93	Second PID measured value		*4
94	Second PID deviation	○	*4
95	Second PID measured value 2		*4
96	Second PID manipulated amount	○	*4
98	Control circuit temperature	○	*4
201	*Output frequency		**Pr.84**
202	*U-phase output current	○	*8
203	*V-phase output current	○	*8
204	*W-phase output current	○	*8
205	Converter output voltage		400 V/800 V
206	*Output current (all three phases)		*8
207	*Excitation current (A)		*8
208	*Torque current (A)		*8
209	Terminal 2		100%
210	Terminal 4		100%
211	Terminal 1	○	100%
212	*Excitation current (%)	○	100%
213	*Torque current (%)	○	100%
230	*Output frequency (signed)	○	**Pr.84**
231	*Motor speed (with sign)	○	*7
232	*Speed command (with sign)	○	*7
237	*Excitation current command	○	100%
238	*Torque current command	○	100%

上正科技有限公司
購買、維修 此手冊零組件
電話： 037-462833
Email: service@repairtw.com
Line id: @zzzz
www.repairtw.com

1 "" shows a monitor item with a high-speed sampling cycle.
*2 The monitor items with a circle (○) represents that its monitor value can be indicated with minus sign.
*3 Indicates a criterion at 100% when the analog trigger is set.
*4 Refer to the full-scale value of terminal FM/CA, or AM (page 297).
*5 The setting is available for the standard model.
*6 The setting is available for the standard model and the IP55 compatible model.
*7 Rated motor frequency × 120 / number of motor poles
*8 The reference current for the trigger level is as follows.

Model FR-F820-[]	00046	00077	00105	00167	00250	00340	00490	00630	00770	00930	01250	01540	01870	02330	03160	03800	04750
	0.75K	1.5K	2.2K	3.7K	5.5K	7.5K	11K	15K	18.5K	22K	30K	37K	45K	55K	75K	90K	110K
Trigger level reference current (A)	3	5	8	11	17.5	24	33	46	61	76	90	115	145	175	215	288	346

Model FR-F840-[]	00023	00038	00105	00083	00126	00170	00250	00310	00380	00470	00620	00770	00930	01160	01800	02160	02600	03250	03610	04320	04810	05470	06100	06830
	0.75K	1.5K	2.2K	3.7K	5.5K	7.5K	11K	15K	18.5K	22K	30K	37K	45K	55K	75K	90K	110K	132K	160K	185K	220K	250K	280K	315K
Trigger level reference current (A)	1.5	2.5	4	6	9	12	17	23	31	38	44	57	71	86	110	144	180	216	260	325	361	432	481	547

Model FR-F842-[]	07700	08660	09620	10940	12120
	355K	400K	450K	500K	560K
Trigger level reference current (A)	610	683	770	866	962

◆ Digital source (monitor item) selection

- Select the digital sources (input/output signals) to be set to **Pr.1038 to Pr.1045** from the following table. When a value other than the ones in the following table is set, "0" (OFF) is applied for indication.

Setting value	Signal name	Remarks
0	—	For the details of the signals, refer to page 355.
1	STF	
2	STR	
3	AU	
4	RT	
5	RL	
6	RM	
7	RH	
8	JOG	
9	MRS	
10	STP (STOP)	
11	RES	
12	CS	
21	X0	For the details of the signals, refer to the Instruction Manual of the FR-A8AX (option).
22	X1	
23	X2	
24	X3	
25	X4	
26	X5	
27	X6	
28	X7	
29	X8	
30	X9	
31	X10	
32	X11	
33	X12	
34	X13	
35	X14	
36	X15	
37	DY	

Setting value	Signal name	Remarks
101	RUN	For the details of the signals, refer to page 312.
102	SU	
103	IPF	
104	OL	
105	FU	
106	ABC1	
107	ABC2	
121	DO0	For the details of the signals, refer to the Instruction Manual of the FR-A8AY (option).
122	DO1	
123	DO2	
124	DO3	
125	DO4	
126	DO5	
127	DO6	
128	RA1	For the details of the signals, refer to the Instruction Manual of the FR-A8AR (option).
129	RA2	
130	RA3	

上正科技有限公司
購買、維修 此手冊零件
電話： 037-466333
Email: service@repairtw.com
Line id: @zzzz
www.repairtw.com

◆ Trigger setting (Pr.1025, Pr.1035 to Pr.1037, Pr.1046, Pr.1047)

- Set the trigger generating conditions and the trigger target channels.

Pr.1025 setting	Trigger generating conditions	Selection of trigger target channel
0	Trace starts when inverter enters an fault status (protective function activated)	—
1	Trace starts when analog monitor satisfies trigger conditions	**Pr.1035**
2	Trace starts when digital monitor satisfies trigger conditions	**Pr.1046**
3	Trace starts when either of analog or digital monitor satisfies trigger conditions	**Pr.1035, Pr.1046**
4	Trace starts when both of analog or digital monitor satisfies trigger conditions (AND)	**Pr.1035, Pr.1046**

- Set the trigger generation conditions for the analog monitor.

Pr.1036 setting	Trigger generation conditions	Trigger level setting
0	Sampling starts when the analog data targeted for the trigger exceeds the value specified at the trigger level	Set the trigger level from 600 to 1400 (-400 to 400%*1) in **Pr.1037**.
1	Sampling starts when the analog data targeted for the trigger falls below the value specified at the trigger level	

*1 In **Pr.1037**, set the number obtained by adding 1,000 to the trigger level.

- Set the trigger generation conditions for the digital monitor.

Pr.1047 setting	Trigger generation conditions
0	Trace starts when the digital data targeted for the trigger turns ON
1	Trace starts when the digital data targeted for the trigger turns OFF

◆ Start of sampling and copying of data (Pr.1020, Pr.1024)

- Set the trace operation. The trace operation is set by one of two ways, by setting **Pr.1020 Trace operation selection** and by setting in the trace mode on the operation panel.
- When "1" is set in **Pr.1020**, sampling starts.
- When "2" is set in **Pr.1020**, a trigger is regarded as generated (for instance: forced trigger), sampling stops and the trace starts.
- When "3" is set in **Pr.1020**, sampling stops.
- When "4" is set in **Pr.1020**, the trace data in internal RAM is transferred to USB memory device. (Trace data cannot be transferred during sampling.)
- To start sampling automatically when the power supply at power-ON or at a recovery after an inverter reset, set "1" in **Pr.1024 Sampling auto start**.

Pr.1020 setting	Trace mode	Operation
0	0.- - -	Sampling standby
1	1.RUN	Sampling start
2	2.TRG	Forced trigger (sampling stop)
3	3.END	Sampling stop
4	4.CPY	Data transmission

正科技有限公司
銷售、維修 此手冊零組件
電話： 037-466333
Email: service@repairtw.com
Line id: @zzzz
www.repairtw.com

- Trace operation can also be set in the trace mode on the operation panel.

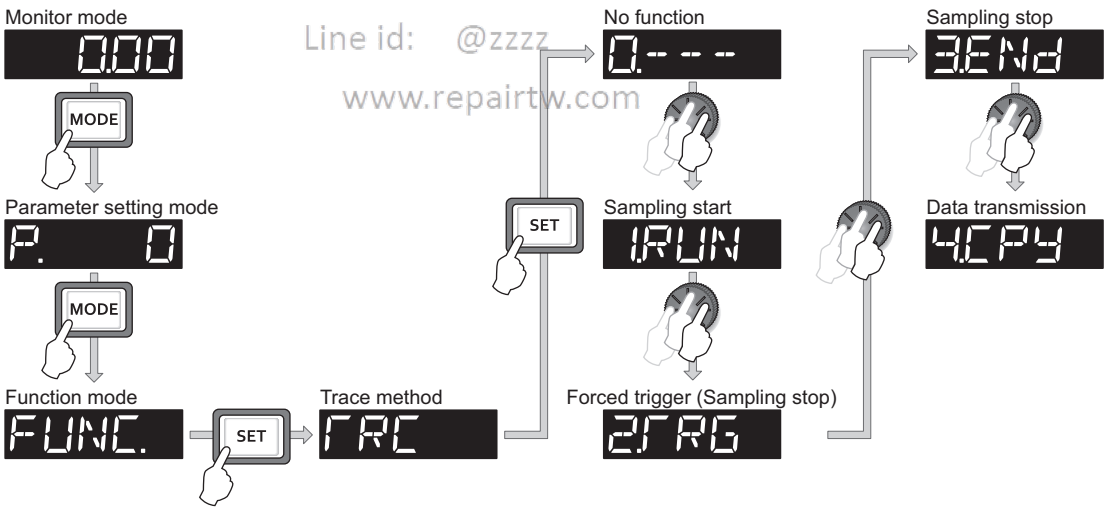

◆ Selection of trace operation by input terminal (TRG signal, TRC signal)

- Trace operation can be selected by signal inputs.
- A forced trigger can be applied when the Trace trigger input (TRG) signal is ON.
- Sampling is started and stopped by the Trace sampling start/end (TRC) signal turning ON and OFF, respectively.
- To input the TRG signal, set "46" in any of **Pr.178 to Pr.189 (Input terminal function selection)**, and to input the TRC signal, set "47" to assign the function to a terminal.

NOTE

- Changing the terminal assignment using **Pr.178 to Pr.189 (Input terminal function selection)** may affect the other functions. Set parameters after confirming the function of each terminal.

◆ Monitoring the trace status

- The trace status can be monitored on the operation panel by setting "38" in **Pr.52 Operation panel main monitor selection, Pr.774 to Pr.776 (Operation panel monitor selection), or Pr.992 Operation panel setting dial push monitor selection**.
  The content depends on the digits on the operation panel.

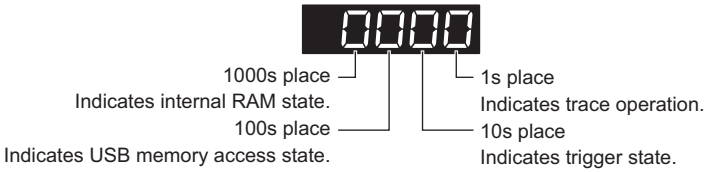

Monitor value	Trace status			
	Fourth digit	Third digit	Second digit	First digit
0 or no display*1	No trace data in internal RAM	USB memory not accessed	Trigger not detected	Trace stopped
1	Trace data in internal RAM	USB memory being accessed	Trigger detected	Trace operation
2	—	USB memory transfer error	—	—
3	—	USB buffer overrun	—	—

*1 The value(s) "0" to the left of the leftmost non-zero value is(are) not shown in the monitor display. For example, if no trace data is in internal RAM, the USB memory is not accessed, no trigger is detected, and the trace operation is performed, "1" appears. (not "0001")

上正科技有限公司
購買、維修、此手冊零組件
電話： 037-466333
Email: service@repairtw.com
Line id: @3222
www.repairtw.com

- When copying the traced data to a USB memory device, the operating status of the USB host can be checked with the inverter LED.
  Refer to page 74 for an outline of the USB communication function.

LED display status	Operating status
OFF	No USB connection.
ON	The communication is established between the inverter and the USB device.
Blinking rapidly	Traced data is being transmitted. (In the memory mode, transmission command is being issued. In the recorder mode, sampling is being performed.)
Blinking slowly	Error in the USB connection.

- During trace operation, the Trace status (Y40) signal can be output.
  To use the Y40 signal, set "40 (positive logic) or 140 (negative logic)" in one of **Pr.190 to Pr.196 (Output terminal function selection)** to assign function to an output terminal.

NOTE

- Changing the terminal assignment using **Pr.190 to Pr.196 (Output terminal function selection)** may affect the other functions. Set parameters after confirming the function of each terminal.

Parameters referred to

Pr.52 Operation panel main monitor selection ☞ page 288
Pr.178 to Pr.189 (Input terminal function selection) ☞ page 355
Pr.190 to Pr.196 (Output terminal function selection) ☞ page 312

5.12 (N) Communication operation parameters

Purpose	Parameter to set			Refer to page
To start operation via communication	Initial setting of operation via communication	P.N000, P.N001, P.N013, P.N014	Pr.549, Pr.342, Pr.502, Pr.779	478
To communicate via PU connector	Initial setting of computer link communication (PU connector)	P.N020 to P.N028	Pr.117 to Pr.124	482
To communicate via RS-485 terminals	Initial setting of computer link communication (RS-485 terminals)	P.N030 to P.N038	Pr.331 to Pr.337, Pr.341	
	MODBUS RTU communication specification	P.N002, P.N030, P.N031, P.N034, P.N080,	Pr.539, Pr.331, Pr.332, Pr.334, Pr.343,	498
	BACnet MS/TP protocol	P.N030, P.N031, P.N050 to P.N054	Pr.331, Pr.332, Pr.390, Pr.726 to Pr.729	511
To Communicate using USB (FR Configurator2)	USB communication	P.N040, P.N041	Pr.547, Pr.548	523
To connect a GOT	GOT automatic recognition	P.N020, P.N030	Pr.117, Pr.331	523
To back up the data of parameter settings and PLC function to the GOT	Backup/restore	P.N110, P.N111	Pr.434, Pr.435	525

5.12.1 Wiring and configuration of PU connector

上正科技有限公司
購買、維修 此手冊零組件
電話: 07-466333
Email: service@repairtw.com
Line id: @zzzz
www.repairtw.com

Using the PU connector as a computer network port enables communication operation from a personal computer, etc.
When the PU connector is connected with a personal, FA, or other computer by a communication cable, a user program can run and monitor the inverter or read and write to parameters.

◆ PU connector pin-outs

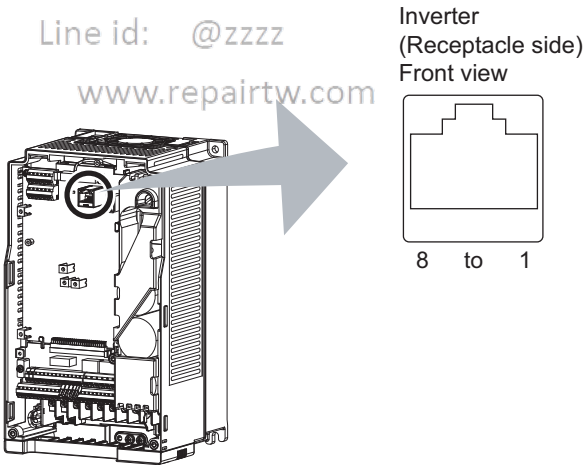

Pin number	Name	Description
1	SG	Earth (ground) (connected to terminal 5)
2	—	Operation panel power supply
3	RDA	Inverter receive+
4	SDB	Inverter send-
5	SDA	Inverter send+
6	RDB	Inverter receive-
7	SG	Earth (ground) (connected to terminal 5)
8	—	Operation panel power supply

NOTE

- Pins No. 2 and 8 provide power to the operation panel or parameter unit. Do not use these pins for RS-485 communication.
- Do not connect the PU connector to the computer's LAN board, FAX modem socket, or telephone modular connector. The product could be damaged due to differences in electrical specifications.

◆ Wiring and configuration of PU connector communication system

- System configuration

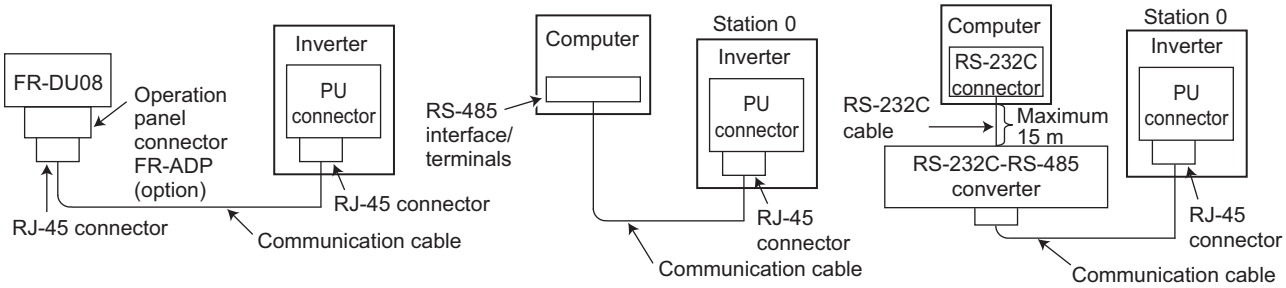

- Wiring between a computer and an inverter for RS-485 communication

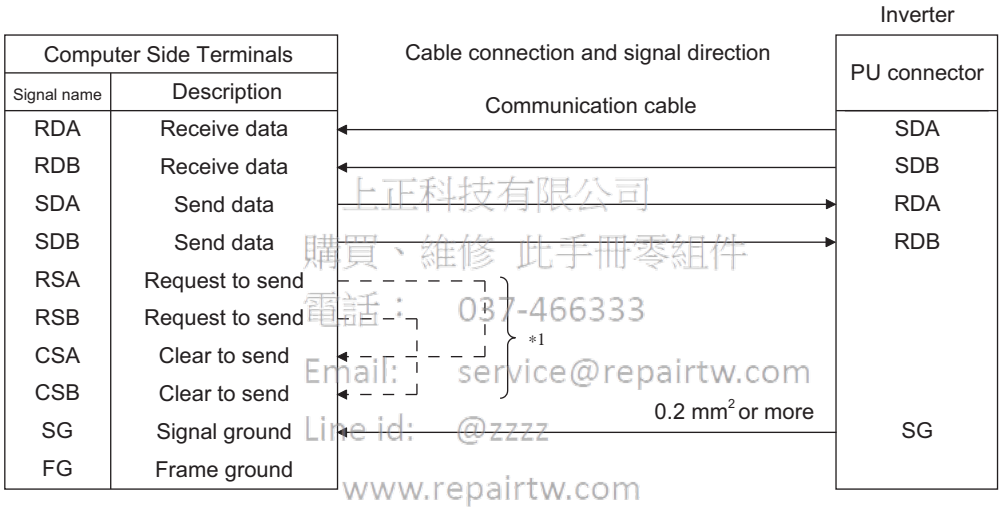

上正科技有限公司
購買、維修 此手冊零組件
電話： 037-466333
Email: service@repairtw.com
Line id: @zzzz
www.repairtw.com

*1 Make connection in accordance with the Instruction Manual of the computer to be used with. Fully check the terminal numbers of the computer since they vary with the model.

NOTE

- When performing RS-485 communication with multiple inverters, use the RS-485 terminals. (Refer to page 476.)
- Computer-inverter connection cable
  Refer to the following for the connection cable (RS-232C to RS-485 converter) between the computer with an RS-232C interface and an inverter. Commercially available products (as of February 2015))

Model	Manufacturer
Interface embedded cable DAFXIH-CAB (D-SUB25P for personal computer) DAFXIH-CABV (D-SUB9P for personal computer) + Connector conversion cable DINV-485CAB (for inverter)*2	Diatrend Corp.
Interface embedded cable dedicated for inverter DINV-CABV*2	

*2 The conversion cable cannot connect multiple inverters. (The computer and inverter are connected in a 1:1 pair.) This is an RS232C-to-RS485 converter-embedded conversion cable. No additional cable or connector is required. For the product details, contact the manufacturer.

- Refer to the following table when fabricating the cable on the user side.
  Commercially available products (as of February 2015)

Product name	Model	Manufacturer
Communication cable	SGLPEV-T (Cat5e/300 m) 24AWG × 4P*3	Mitsubishi Cable Industries, Ltd.
RJ-45 connector	5-554720-3	Tyco Electronics

*3 Do not use pins No. 2 and 8 of the communication cable.

5.12.2 Wiring and configuration of RS-485 terminals

◆ RS-485 terminal layout

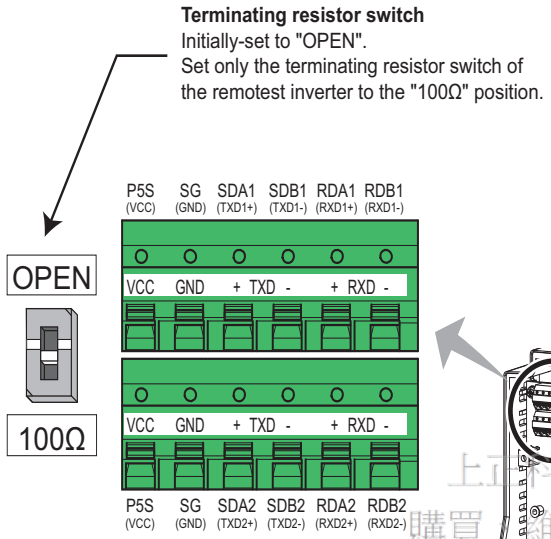

上正科技有限公司
購買 維修 此手冊零組件
電話 037-466333
Email: service@repairtw.com
Line id: @zzzz
www.repairtw.com

Name	Description
RDA1 (RXD1+)	Inverter receive+
RDB1 (RXD1-)	Inverter receive-
RDA2 (RXD2+)	Inverter receive + (for branch)
RDB2 (RXD2-)	Inverter receive - (for branch)
SDA1 (TXD1+)	Inverter send+
SDB1 (TXD1-)	Inverter send-
SDA2 (TXD2+)	Inverter send + (for branch)
SDB2 (TXD2-)	Inverter send - (for branch)
P5S (VCC)	5 V (permissible load current 100 mA)
SG (GND)	Earthing (grounding) (connected to terminal SD)

◆ Connection of RS-485 terminals and wires

- The size of RS-485 terminal block is the same as that of the control circuit terminal block. Refer to page 63 for the wiring method.

NOTE

- To avoid malfunction, keep the RS-485 terminal wires away from the control circuit board.
- When the FR-F820-01250(30K) or lower, or the FR-F840-00620(30K) or lower is used with a plug-in option, lead the wires through the hole on the side face of the front cover for wiring of the RS-485 terminals.

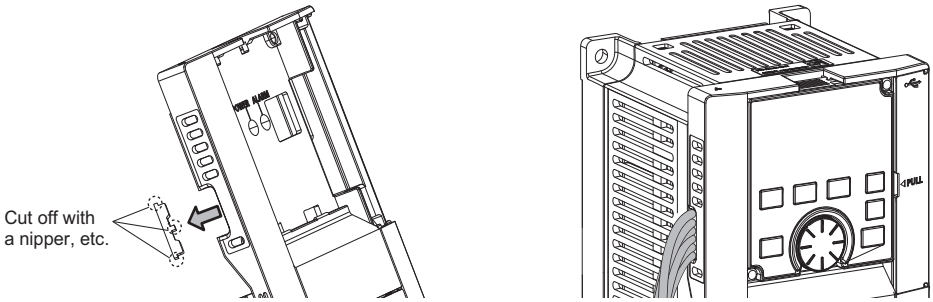

- When the FR-F820-01540(37K) of higher, or the FR-F840-00770(37K) or higher is used with a plug-in option, lead the wires on the left side of the plug-in option for wiring of the RS-485 terminals.

◆ System configuration of RS-485 terminals

- Computer and inverter connection (1:1)

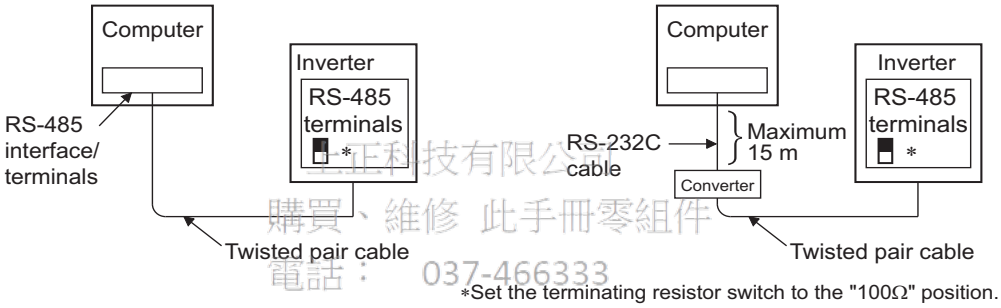

正正科技有限公司
購買、維修 此手冊零組件
電話： 037-466333
Email service@repairtw.com
Line id @zzzz
www.repairtw.com

- Combination of a computer and multiple inverters (1:n)

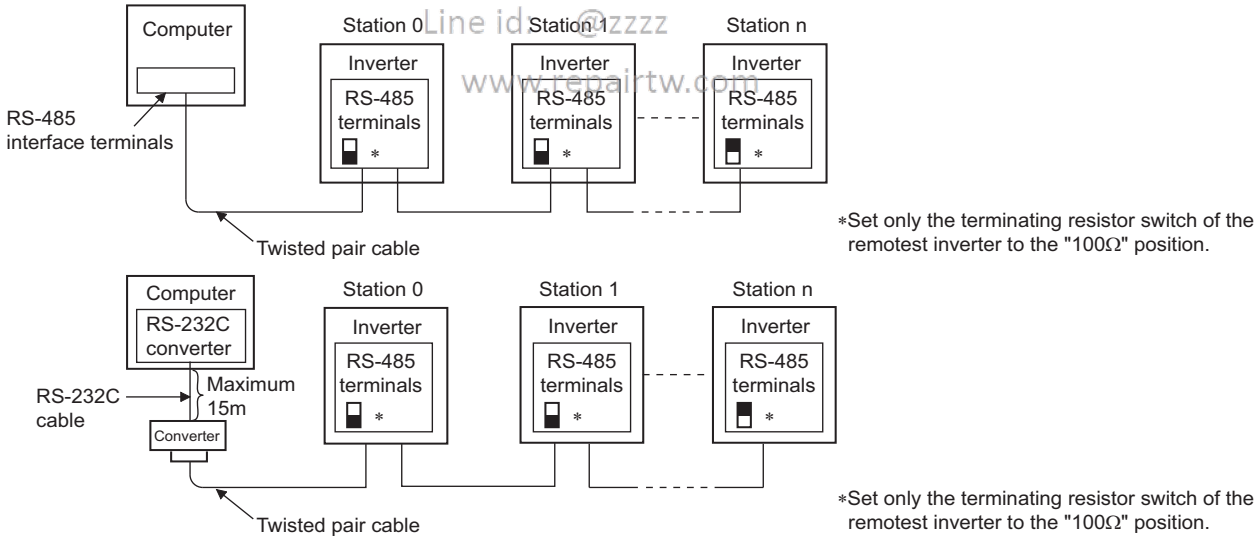

◆ RS-485 terminal wiring method

- Wiring between a computer and an inverter for RS-485 communications

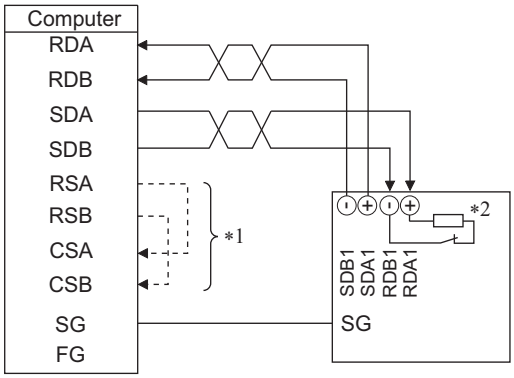

- Wiring between a computer and multiple inverters for RS-485 communication

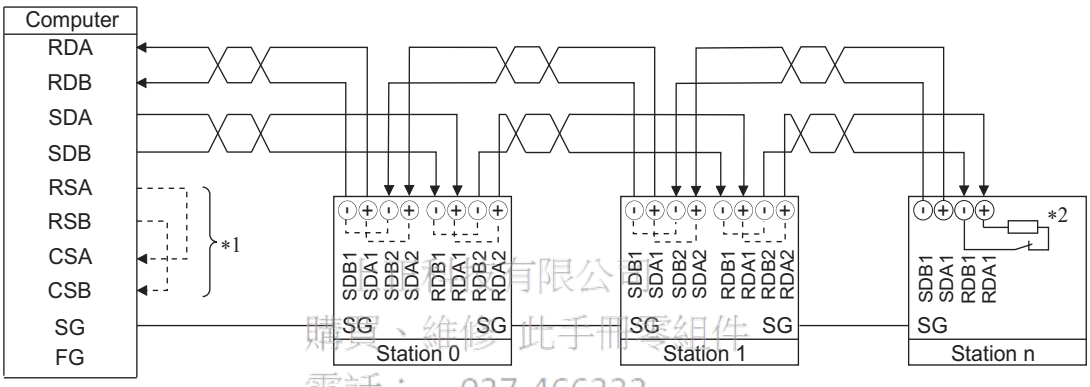

有限公司
購買、維修此手冊零組件
電話： 037-466333
Email: service@repairtw.com
Line id: @zzzz
www.repairtw.com

*1 Make connection in accordance with the Instruction Manual of the computer to be used with.
Fully check the terminal numbers of the computer since they vary with the model.

*2 On the inverter most remotely connected with the computer, set the terminating resistor switch in the ON (100 Ω) position.

NOTE

- For branching, connect the wires as shown in the following table.

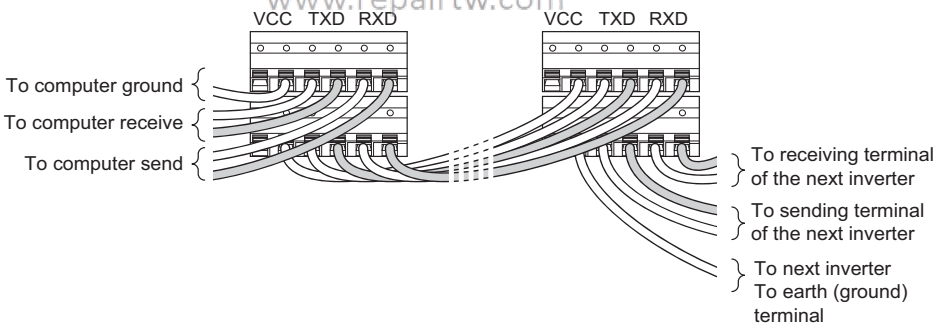

◆ Two-wire type connection

- If the computer is 2-wire type, a connection from the inverter can be changed to 2-wire type by passing wires across reception terminals and transmission terminals of the RS-485 terminals.

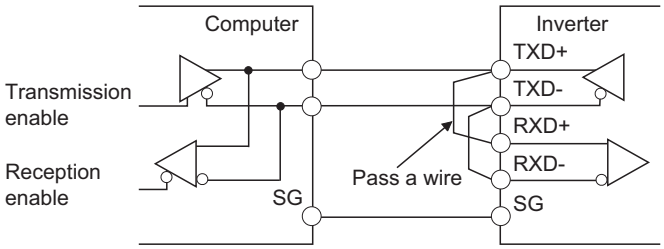

NOTE

- A program should be created so that transmission is disabled (receiving state) when the computer is not sending and reception is disabled (sending state) during sending to prevent the computer from receiving its own data.

5.12.3 Initial setting of operation via communication

Set the action when the inverter is performing operation via communication.

- Set the RS-485 communication protocol. (Mitsubishi inverter protocol / MODBUS RTU protocol)
- Set the action at fault occurrence or at writing of parameters.

Pr.	Name	Initial value	Setting range	Description
549 N000	**Protocol selection**	0	0	Mitsubishi inverter protocol (computer link)
			1	MODBUS RTU protocol
			2	BACnet MS/TP protocol
342 N001	**Communication EEPROM write selection**	0	0	Parameter values written by communication are written to the EEPROM and RAM.
			1	Parameter values written by communication are written to the RAM.
502 N013	**Stop mode selection at communication error**	0	0 to 4	Select the operation at a communication error occurrence.
779 N014	**Operation frequency during communication error**	9999	0 to 590 Hz	Set the frequency for the operation when a communication error occurs.
			9999	Operation continues at the same frequency before the communication error.

◆ Setting the communication protocol (Pr.549)

- Select the communication protocol.
- The MODBUS RTU protocol can be used by communication from the RS-485 terminals.

上正科技有限公司
購買、維修、此手冊零組件
電話：037-406333
Email: service@repairtw.com
Line id: @2222
www.repairtw.com

Pr.549 setting	Communication protocol
0 (initial value)	Mitsubishi inverter protocol (computer link)
1	MODBUS RTU protocol
2	BACnet MS/TP protocol

◆ Communication EEPROM write selection (Pr.342)

- When parameter write is performed via the inverter PU connector, RS-485 terminal, USB communication, or a communication option, the parameters storage device can be changed to RAM only from both EEPROM and RAM. Use this function if parameter settings are changed frequently.
- When changing the parameter values frequently, set "1" in **Pr.342 Communication EEPROM write selection** to write them to the RAM only. The life of the EEPROM will be shorter if parameter write is performed frequently with the setting unchanged from "0 (initial value)" (EEPROM write).

NOTE

- Turning OFF the inverter's power supply clears the modified parameter settings when **Pr.342** = "1 (write only to RAM)". Therefore, the parameter values at next power-ON are the values last stored in EEPROM.
- The parameter setting written in RAM cannot be checked on the operation panel. (The values displayed on the operation panel are the ones stored in EEPROM.)

◆ Operation selection at a communication error (Pr.502, Pr.779)

- For communication using RS-485 terminals or a communication option, operation at a communication error can be selected. The operation is active under the Network operation mode.
- Select the stop operation at the retry count excess (**Pr.335**, enabled only when the Mitsubishi inverter protocol is selected) or at a signal loss detection (**Pr.336, Pr.539**).

Fault type	Pr.502 setting	At fault occurrence			At fault removal		
		Operation	Indication	Fault (ALM) signal	Operation	Indication	Fault (ALM) signal
Communication line	0 (initial value)	Output shutoff	E. SER*1	ON	Output stop status continues.	E. SER*1	ON
	1	Output to decelerate and stop the motor.	"E.SER" indication after stop.*1	ON after stop			
	2			OFF	Restart*2	Normal	OFF
	3	Operation continues at the frequency set in **Pr.779**.	Normal	OFF	Normal	Normal	OFF
	4		"CF" warning				
Communication option (when a communication option is used)	0, 3	Output shutoff	"E. 1"	ON	Output stop status continues.	"E. 1"	ON
	1, 2	Output to decelerate and stop the motor.	"E. 1" after stop	ON after stop			
	4	Operation continues at the frequency set in **Pr.779**.	"CF" warning	OFF	Operation continues at the frequency set in **Pr.779**.	"CF" warning	OFF

*1 If in communication by the communication option, "E.OP1" is displayed.
*2 When the communication error is removed during deceleration, the motor re-accelerates.

- When a communication error is detected while communication with the RS-485 terminals is performed, the Alarm (LF) signal is output to an output terminal of the inverter. To use the LF signal, set "98 (positive logic) or 198 (negative logic)" in any of **Pr.190 to Pr.196 (Output terminal function selection)** to assign the function to the output terminal. (To output the LF signal even if communication through RS-485 terminals is not performed for the time set in **Pr.336** or longer, or during communication using a communication option, set "3 or 4" in **Pr.502**.)

上正科技有限公司
購買、維修 此手冊零組件
電話： 037-466333
Email: service@repairtw.com
Line id: @zzzz
www.repairtw.com

- The following charts show operations when a communication line error occurs.

Pr.502 = "0" (initial value)

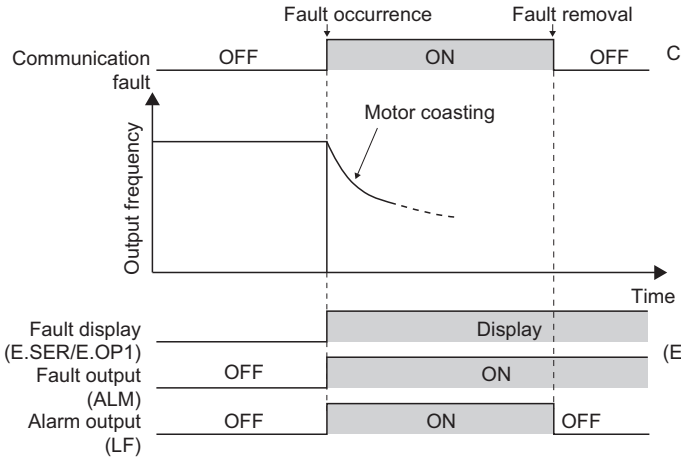

Pr.502 = "1"

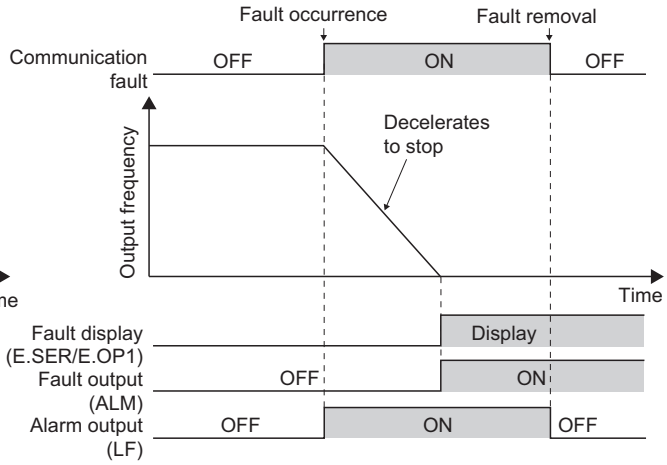

Pr.502 = "2"

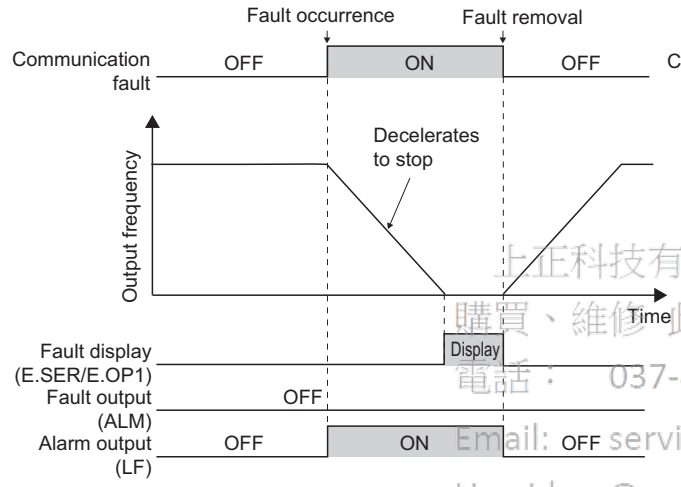

Pr.502 = "3"

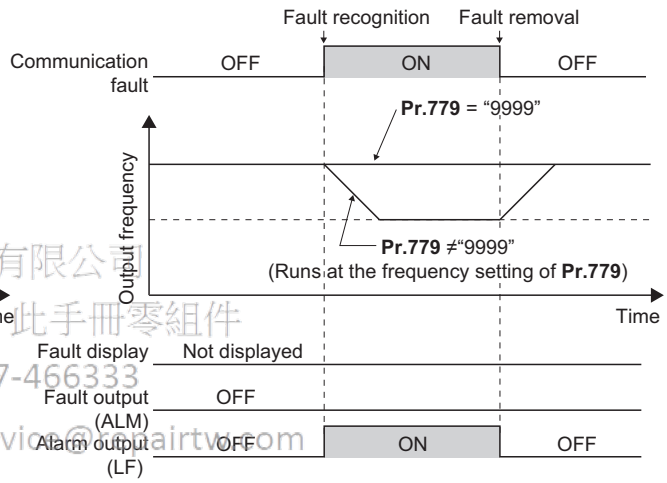

上正科技有限公司
購買、維修此手冊零組件
電話： 037-466333
Email: service@repairtw.com
Line id: @zzzz
www.repairtw.com

Pr.502 = "4"

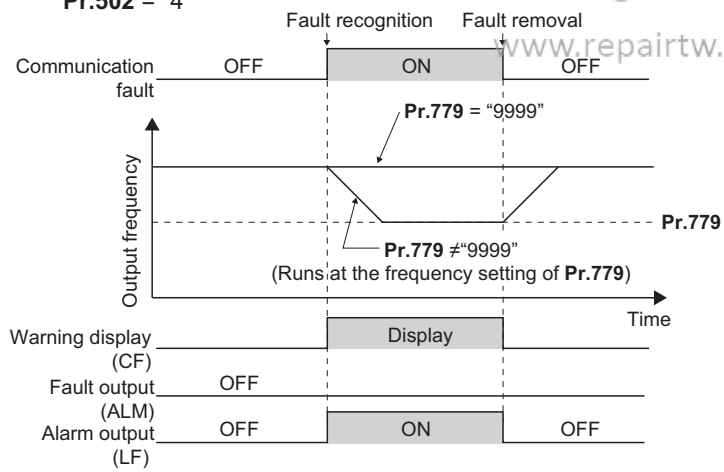

- The following charts show operations when a communication option fault occurs.

Pr.502 = "0 (initial value) or 3"

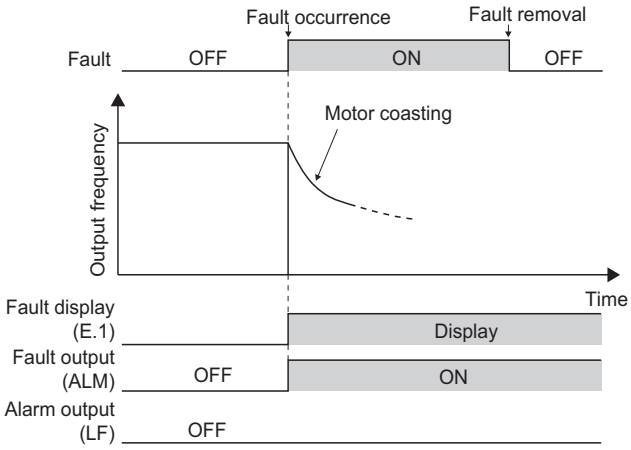

Pr.502 = "1 or 2"

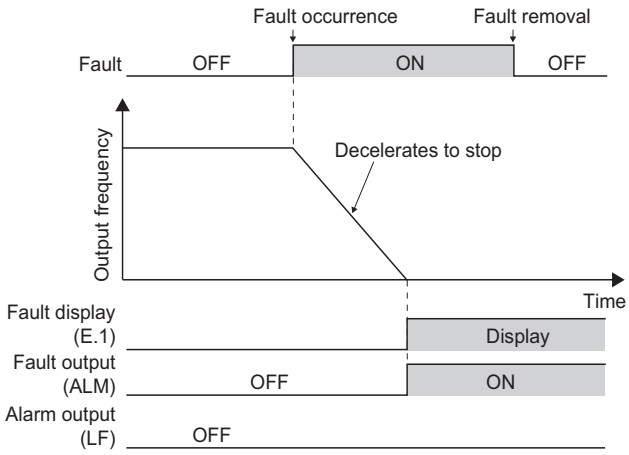

Pr.502 = "4"

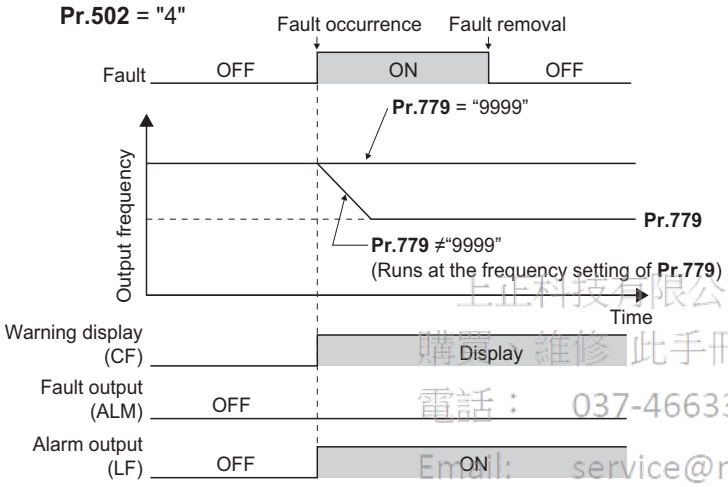

上正科技有限公司
購買、維修此手冊零組件
電話： 037-466333
Email: service@repairtw.com
Line id: @zzzz
www.repairtw.com

NOTE

- Fault output indicates the Fault (ALM) signal and an alarm bit output.
- When the fault output is set enabled, fault records are stored in the fault history. (A fault record is written to the fault history at a fault output.)
- When the fault output is not enabled, fault record is overwritten to the fault history temporarily but not stored.
- After the fault is removed, the fault indication goes back to normal indication on the monitor, and the fault history goes back to the previous status.
- When **Pr.502** ≠ "0", the normal deceleration time setting (settings like **Pr.8, Pr.44,** and Pr.45) is applied as the deceleration time. Normal acceleration time setting (settings like **Pr.7** and Pr.44) is applied as the acceleration time for restart.
- When **Pr.502** = "2, 3, or 4", the inverter operates with the start command and the speed command, which were used before the fault.
- If a communication line error occurs, then the error is removed during deceleration while **Pr.502** = "2", the motor re-accelerates from that point.
- The **Pr.502** and **Pr.779** settings are valid when communication is performed via the RS-485 terminals or a communication option.
- These parameters are valid under the Network operation mode. When performing communication through RS-485 terminals, set **Pr.551 PU mode operation command source selection** ≠ "1".
- **Pr.502** is valid for the device that has the command source under the Network operation mode. If a communication option is installed while **Pr.550** = "9999 (initial setting)", a communication error in RS-485 terminals occurs and **Pr.502** becomes invalid.
- If the communication error setting is disabled with **Pr.335** = "9999" or **Pr.539** = "9999" while **Pr.502** = "3 or 4", the inverter does not operate with the frequency set in **Pr.779** when a communication error occurs.
- If a communication error occurs while continuous operation at **Pr.779** is selected with **Pr.502** = "3 or 4", the inverter operates at the frequency set in **Pr.779** even though the speed command source is at the external terminals.
  Example) If a communication error occurs while **Pr.339** = "2" and the RL signal is input through an external terminal, the operation is continued at the frequency set in **Pr.779**.

⚠CAUTION

- When **Pr.502** = "3" and a communication line error occurs, or **Pr.502** = "4" and a communication line error or a communication option fault occurs, the operation continues. When setting "3 or 4" in **Pr.502**, provide a safety stop countermeasure other than via communication. For example, input a signal through an external terminal (RES, MRS, etc.) or press the PU stop on the operation panel.

Parameters referred to

Pr.7 Acceleration time, Pr.8 Deceleration time ☞ page 216
Pr.335 RS-485 communication retry count ☞ page 482
Pr.336 RS-485 communication check time interval ☞ page 482
Pr.539 MODBUS RTU communication check time interval ☞ page 498
Pr.550 NET mode operation command source selection ☞ page 239
Pr.551 PU mode operation command source selection ☞ page 239

5.12.4 Initial settings and specifications of RS-485 communication

Use the following parameters to perform required settings for RS-485 communication between the inverter and a personal computer.

- Use the PU connector on the inverter or RS-485 terminals as communication interface.
- The Mitsubishi inverter protocol, MODBUS-RTU protocol, or BACnet protocol is used. Parameter setting, monitoring, etc. can be performed through communication.
- To make communication between the personal computer and inverter, setting of the communication specifications must be made to the inverter in advance.
  Data communication cannot be made if the initial settings are not made or if there is any setting error.

上正科技有限公司
購買、維修 此手冊零組件
電話： 037-466333
Email: service@repairtw.com
Line id: @zzzz
www.repairtw.com

◆ Parameters related to PU connector communication

Pr.	Name	Initial value	Setting range	Description	
117 **N020**	**PU communication station number**	0	0 to 31	Use this parameter to specify the inverter station number. Enter the inverter station numbers when two or more inverters are connected to one personal computer.	
118 **N021**	**PU communication speed**	192	48, 96, 192, 384, 576, 768, 1152	Select the communication speed. The setting value × 100 equals the communication speed. For example, enter 192 to set the communication speed of 19200 bps.	
E022	**PU communication data length**	0	0	Data length 8 bits	
			1	Data length 7 bits	
E023	**PU communication stop bit length**	1	0	Stop bit length 1 bit	
			1	Stop bit length 2 bits	
119	**PU communication stop bit length / data length**	1	0	Stop bit length 1 bit	Data length 8 bits
			1	Stop bit length 2 bits	
			10	Stop bit length 1 bit	Data length 7 bits
			11	Stop bit length 2 bits	
120 **N024**	**PU communication parity check**	2	0	Parity check disabled.	
			1	Parity check (odd parity) enabled.	
			2	Parity check (even parity) enabled.	
121 **N025**	**PU communication retry count**	1	0 to 10	Set the permissible number of retries for unsuccessful data reception. If the number of consecutive errors exceeds the permissible value, the inverter output will be stopped.	
			9999	The inverter output will not be shut off even when a communication error occurs.	
122 **N026**	**PU communication check time interval**	9999	0	PU connector communication is disabled.	
			0.1 to 999.8 s	Set the interval of the communication check (Signal loss detection) time. If a no-communication state persists for longer than the permissible time, the inverter output will be shut off.	
			9999	No communication check (Signal loss detection)	
123 **N027**	**PU communication waiting time setting**	9999	0 to 150 ms	Set the time delay between data transmission to the converter and the response.	
			9999	The time delay is not set in this parameter but in communication data. Delay time: Number set in the data × 10 ms	
124 **N028**	**PU communication CR/LF selection**	1	0	Without CR/LF	
			1	With CR	
			2	With CR/LF	

上正科技有限公司
購買、維修 此手冊零組件
電話：037-46633
Email: service@repairtw.com
Line id: @zzzz
www.repairtw.com

◆ Parameters related to RS-485 terminal communication

Pr.	Name	Initial value	Setting range	Description
331 **N030**	**RS-485 communication station number**	0	0 to 31 (0 to 247)[*1*2]	Enter the station number of the inverter. (Same specifications as **Pr.117**)
332 **N031**	**RS-485 communication speed**	96	3, 6, 12, 24, 48, 96, 192, 384, 576, 768, 1152[*3]	Select the communication speed. (Same specifications as **Pr.118**)
N032	**RS-485 communication data length**	0	0, 1	Select the data length. (Same specifications as **P.E022**)[*4]
N033	**RS-485 communication stop bit length**	1	0, 1	Select the stop bit length. (Same specifications as **P.E023**)[*5]
333	**RS-485 communication stop bit length / data length**	1	0, 1, 10, 11	Select the stop bit length and data bit length. (Same specifications as **Pr.119**)[*4*5]
334 **N034**	**RS-485 communication parity check selection**	2	0, 1, 2	Select the parity check specifications. (Same specifications as **Pr.120**)
335 **N035**[*6]	**RS-485 communication retry count**	1	0 to 10, 9999	Set the permissible number of retries for unsuccessful data reception. (Same specifications as **Pr.121**)
336 **N036**[*6]	**RS-485 communication check time interval**	0 s	0	RS-485 communication is available, but the inverter trips in the NET operation mode.
			0.1 to 999.8 s	Set the interval of the communication check (Signal loss detection) time. (Same specifications as **Pr.122**)
			9999	No communication check (Signal loss detection)
337 **N037**[*6]	**RS-485 communication waiting time setting**	9999	0 to 150 ms, 9999	Set the waiting time between data transmission to the inverter and the response. (Same specifications as **Pr.123**)
341 **N038**[*6]	**RS-485 communication CR/LF selection**	1	0, 1, 2	Select the presence/absence of CR/LF. (Same specifications as **Pr.124**)

*1 When "1" (MODBUS RTU protocol) is set in **Pr.549**, the setting range within parentheses is applied.
*2 When a value outside the setting range is set, the inverter operates at the initial value.
*3 When **Pr.549** = "2" (BACnet MS/TP protocol), the setting range is "96 to 1152".
*4 In the MODBUS RTU protocol, the data length is fixed at 8 bits.
*5 In the MODBUS RTU protocol, **Pr.334** setting is applied as the stop bit length. (Refer to page 498.)
*6 In the MODBUS RTU protocol, this is invalid.

上正科技有限公司
購買、維修 工控零組件
電話： 037-466333
Email: service@repairtw.com
Line Id: @2222
www.repairtw.com

NOTE

- The monitor items and parameter settings can be read during communication with the **Pr.336 RS-485 communication check time interval** = "0 (initial value)" setting, but such operation will become faulty once the operation mode is changed to the NET operation mode. When the NET operation mode is selected as the start-up operation mode, communication is performed once, then a Communication fault (inverter) (E.SER) occurs. To perform operation or parameter writing via communication, set "9999" or a large setting value in **Pr.336**. (The setting value is determined by the computer program.) (Refer to page 490.)
- Always reset the inverter after making the initial settings of the parameters. After changing the communication-related parameters, communication cannot be made until the inverter is reset.

5.12.5 Mitsubishi inverter protocol (computer link communication)

Parameter setting and monitoring, etc. are possible by using the Mitsubishi inverter protocol (computer link communication) via inverter PU connector and the RS-485 terminals.

◆ Communication specifications

- The communication specifications are shown in the following table.

Item		Description	Related parameter
Communication protocol		Mitsubishi inverter protocol (computer link communication)	**Pr.551**
Conforming standard		EIA-485 (RS-485)	**—**
Number of connectable units		1: N (maximum 32 units), the setting range of station number is 0 to 31.	**Pr.117** **Pr.331**
Communication speed	PU connector	Selected among 4800/9600/19200/38400/57600/76800/115200 bps.	**Pr.118**
	RS-485 terminals	Selected among 300/600/1200/2400/4800/9600/19200/38400/57600/76800/115200 bps.	**Pr.332**
Control procedure		Asynchronous method	**—**
Communication method		Half-duplex system	**—**
Communication specifications	Character system	ASCII (7 bits or 8 bits can be selected.)	**Pr.119** **Pr.333**
	Start bit	1 bit	**—**
	Stop bit length	1 bit or 2 bits can be selected.	**Pr.119** **Pr.333**
	Parity check	Check (at even or odd numbers) or no check can be selected.	**Pr.120** **Pr.334**
	Error check	Sum code check	**—**
	Terminator	CR/LF (whether or not to use it can be selected)	**Pr.124** **Pr.341**
Time delay setting		Availability of the setting is selectable.	**Pr.123** **Pr.337**

◆ Communication procedure

上立科技有限公司
購買、維修、此手冊零組件
電話： 037-466333
Email: service@repairtw.com
Line id: @zzzz
www.repairtw.com

- Data communication between the computer and inverter is made in the following procedure.

(a) Request data is sent from the computer to the inverter. (The inverter will not send data unless requested.)
(b) Communication waiting time
(c) The inverter sends reply data to the computer in response to the computer request.
(d) Inverter data processing time
(e) An answer from the computer in response to reply data (c) of the inverter is transmitted. (Even if (e) is not sent, subsequent communication is made properly.)

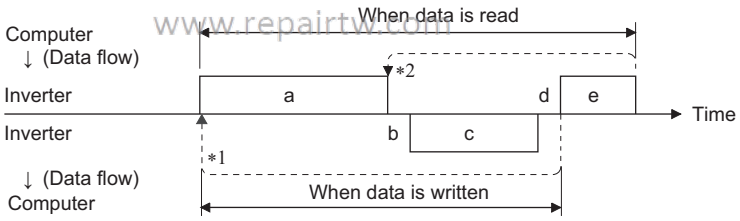

*1 If a data error is detected and a retry must be made, perform retry operation with the user program. The inverter output is shut off if the number of consecutive retries exceeds the parameter setting.

*2 On receipt of a data error occurrence, the inverter returns reply data (c) to the computer again. The inverter output is shut off if the number of consecutive data errors reaches or exceeds the parameter setting.

◆ Communication operation presence/absence and data format types

- Data communication between the computer and inverter is made in ASCII code (hexadecimal code).

- Communication operation presence/absence and data format types are as follows.

Symbol	Operation		Operation command	Operation frequency	Multi command	Parameter write	Inverter reset	Monitor	Parameter read
a	Communication request is sent to the inverter in accordance with the user program in the computer.		A, A1	A	A2	A	A	B	B
b	Inverter data processing time		With	With	With	With	Without	With	With
c	Reply data from the inverter (Data (a) is checked for an error.)	No error*1 (Request accepted)	C	C	C1*3	C	C*2	E, E1, E2, E3	E
		With error (Request rejected)	D	D	D	D	D*2	D	D
d	Computer processing delay time		10 ms or more						
e	Reply from computer in response to reply data c (Data c is checked for error.)	No error*1 (No inverter processing)	Without	Without	Without (C)	Without	Without	Without (C)	Without (C)
		With error (Inverter outputs c again.)	Without	Without	F	Without	Without	F	F

*1 In the communication request data from the computer to the inverter, the time of 10 ms or more is also required after an acknowledgment (ACK) signal showing "No data error detected" is sent. (Refer to page 489.)
*2 Reply from the inverter to the inverter reset request can be selected. (Refer to page 493.)
*3 At mode error, and data range error, C1 data contains an error code. (Refer to page 497.) Except for those errors, the error is returned with data format D.

- Data writing format

a. Communication request data from the computer to the inverter

上正科技有限公司
購買、維修、配件、零組件
電話： 037-466333
Email: service@repairtw.com
Line id: @zzzz
www.repairtw.com

Format	Number of characters																		
	1	2	3	4	5	6	7	8	9	10	11	12	13	14	15	16	17	18	19
A	ENQ *1	Inverter station number*2		Instruction code		*3	Data				Sum check		*4						
A1	ENQ *1	Inverter station number*2		Instruction code		*3	Data			Sum check		*4							
A2	ENQ *1	Inverter station number*2		Instruction code		*3	Send data type	Receive data type	Data 1				Data 2				Sum check		*4

c. Reply data from the inverter to the computer (No data error detected)

Format	Number of characters																		
	1	2	3	4	5	6	7	8	9	10	11	12	13	14	15	16	17	18	19
C	ACK *1	Inverter station number *2		*4															
C1	STX *1	Inverter station number *2		Send data type	Receive data type	Error code 1	Error code 2	Data 1				Data 2				ETX*1	Sum check		*4

c. Reply data from the inverter to the computer (Data error detected)

Format	Number of characters				
	1	2	3	4	5
D	NAK *1	Inverter station number *2		Error code	*4

*1 A control code.
*2 The inverter station number is specified in hexadecimal in the range of H00 to H1F (stations No. 0 to 31).
*3 Set the delay time. When **Pr.123 PU communication waiting time setting** or **Pr.337 RS-485 communication waiting time setting** is set to other than "9999", create the communication request data without "delay time" in the data format. (The number of characters decreases by 1.)
*4 CR+LF code: When a computer transmits data to the inverter, some computers automatically provide either one or both of the codes CR (carriage return) and LF (line feed) at the end of a data group. In this case, the same setting is required for data sent from the inverter to the computer. Use **Pr.124** or **Pr.341** for the CR+LF code setting.

- Data reading format

a. Communication request data from the computer to the inverter

Format	Number of characters								
	1	2	3	4	5	6	7	8	9
B	ENQ*1	Inverter station number *2		Instruction code		*3	Sum check		*4

c. Reply data from the inverter to the computer (No data error detected)

Format	Number of characters												
	1	2	3	4	5	6	7	8	9	10	11	12	13
E	STX*1	Inverter station number *2		Read data				ETX *1	Sum check		*4		
E1	STX *1	Inverter station number *2		Read data		ETX*1	Sum check		*4				
E2	STX *1	Inverter station number *2		Read data						ETX*1	Sum check		*4

Format	Number of characters							
	1	2	3	4 to 23	24	25	26	27
E3	STX*1	Inverter station number*2		Read data (Inverter model information)	ETX*1	Sum check		*4

c. Reply data from the inverter to the computer (Data error detected)

Format	Number of characters				
	1	2	3	4	5
D	NAK *1	Inverter station number *2		Error code	*4

正科技有限公司
購買、維修 此手冊零組件
電話： 037-466333
Email: service@repairtw.com
Line id: @zzzz
www.repairtw.com

e. Transmission data from the computer to the inverter when reading data

Format	Number of characters			
	1	2	3	4
C (No data error detected)	ACK*1	Inverter station number *2		*4
F (Data error detected)	NAK *1	Inverter station number *2		*4

*1 A control code.
*2 The inverter station number is specified in hexadecimal in the range of H00 to H1F (stations No. 0 to 31).
*3 Set the delay time. When **Pr.123 PU communication waiting time setting** or **Pr.337 RS-485 communication waiting time setting** is set to other than "9999", create the communication request data without "delay time" in the data format. (The number of characters decreases by 1.)
*4 CR+LF code: When a computer transmits data to the inverter, some computers automatically provide either one or both of the codes CR (carriage return) and LF (line feed) at the end of a data group. In this case, the same setting is required for data sent from the inverter to the computer. Use **Pr.124** or Pr.341 for the CR+LF code setting.

◆ Data definitions

- Control code

Signal name	ASCII code	Description
STX	H02	Start Of Text (Start of data)
ETX	H03	End Of Text (End of data)
ENQ	H05	Enquiry (Communication request)
ACK	H06	Acknowledge (No data error detected)
LF	H0A	Line Feed
CR	H0D	Carriage Return
NAK	H15	Negative Acknowledge (Data error detected)

- Inverter station number

Specify the station number of the inverter which communicates with the computer.

- Instruction code

  Specify the processing request, for example, operation or monitoring, given by the computer to the inverter. Therefore, the operation or monitoring an item is enabled by specifying the corresponding instruction code. (Refer to page 493.)
- Data

  Read/write data such as parameters transmitted from/to the inverter. The definitions and ranges of set data are determined in accordance with the instruction codes. (Refer to page 493.)
- Time delay

  Specify the delay time (time period between the time when the inverter receives data from the computer and the time when the inverter starts transmission of reply data). Set the delay time in accordance with the response time of the computer in the range of 0 to 150 ms in 10 ms increments. (For example, "1" for 10 ms or "2" for 20 ms.)

  When **Pr.123 PU communication waiting time setting** or **Pr.337 RS-485 communication waiting time setting** is set to other than "9999", create the communication request data without "delay time" in the data format. (The number of characters decreases by 1.)

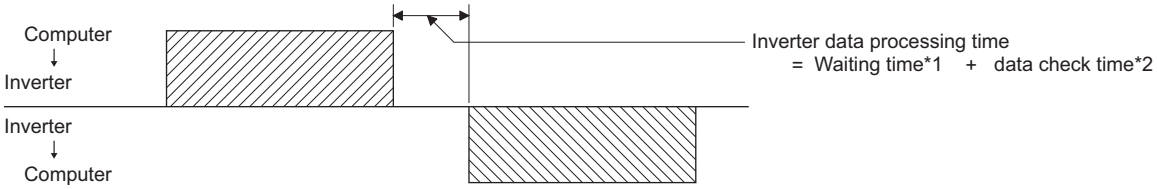

*1 Number set in data × 10 (ms) when **Pr.123** = "9999". **Pr.123** setting (ms) when **Pr.123** ≠ "9999".

*2 About 10 to 30 ms. It varies depending on the instruction code.

NOTE

- The data check time varies depending on the instruction code. (Refer to page 489.)

上正科技有限公司
購買、維修 此手冊零組件
電話： 037-466333
Email: service@repairtw.com
Line id: @zzzz
www.repairtw.com

- Sum check code

  The sum check code is a 2-digit ASCII (hexadecimal) representing the lower 1 byte (8 bits) of the sum derived from the checked ASCII data.

(Example 1)

Computer→ Inverter

	ENQ	Station number		Instruction code		*Waiting time	Data				Sum check code		
		0	1	E	1	1	0	7	A	D	F	4	←Binary code
ASCII Code →	H05	H30	H31	H45	H31	H31	H30	H37	H41	H44	H46	H34	

H30+H31+H45+H31+H31+H30+H37+H41+H44

= H1F4

Sum

*When the **Pr.123 or Pr.337 (Waiting time setting)** ≠9999", create the communication request data without "waiting time" in the data format. (The number of characters decreases by 1.)

(Example 2)

Inverter → Computer

	STX	Station number		Data read				ETX	Sum check code		
		0	1	1	7	7	0		3	0	←Binary code
ASCII Code →	H02	H30	H31	H31	H37	H37	H30	H03	H33	H30	

H30+H31+H31+H37+H37+H30

= H130

Sum

- Error code

  If any error is found in the data received by the inverter, its error definition is sent back to the computer together with the NAK code.

Error code	Error item	Error description	Inverter operation
H0	Computer NAK error	The number of errors consecutively detected in communication request data from the computer is greater than the permissible number of retries.	The inverter output is shut off (E.PUE/E.SER) if error occurs continuously more than the permissible number of retries. The LF signal is output.
H1	Parity error	The parity check result does not match the specified parity.	
H2	Sum check error	The sum check code in the computer does not match that of the data received by the inverter.	
H3	Protocol error	The data received by the inverter has a grammatical mistake. Or, data receive is not completed within the predetermined time. The CR or LF code specification is not the same as the setting of the parameter.	
H4	Framing error	The stop bit length differs from the initial setting.	
H5	Overrun error	New data has been sent by the computer before the inverter completes receiving the preceding data.	
H6	—	—	—
H7	Character error	The character received is invalid (other than 0 to 9, A to F, control code).	The inverter does not accept the received data. However, the inverter output is not shut off.
H8	—	—	—
H9	—	—	—
HA	Mode error	Parameter write was attempted when the inverter does not perform computer link communication, when the operation commands are not given through communication, or during inverter operation.	The inverter does not accept the received data. However, the inverter output is not shut off.
HB	Instruction code error	The specified instruction code does not exist.	
HC	Data range error	Invalid data has been specified for parameter writing, running frequency setting, etc.	
HD	—	—	—
HE	—	—	—
HF	Normal (no error)	—	—

長世科技有限公司
購買、維修 此手冊零組件
電話： 037-466333
Email: service@repairtw.com
Line id: @zzzz
www.repairtw.com

◆ Response time

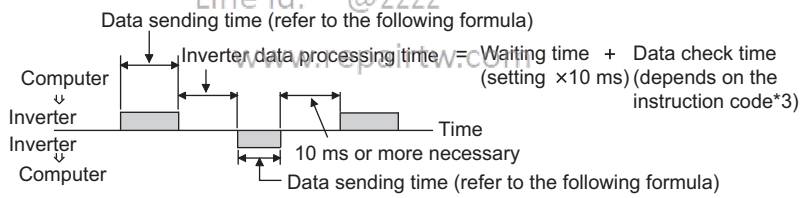

[Formula for data transmission time]

$$\frac{1}{\text{Communication speed (bps)}} \times \text{Number of data characters *1} \times \text{Communication specifications (Total number of bits) *2} = \text{data transmission time (s)}$$

*1 Refer to page 485.

*2 Communication specifications

Name		Number of bits
Stop bit length		1 bit 2 bits
Data length		7 bits 8 bits
Parity check	With	1 bit
	Without	0

In addition to the above, 1 start bit is necessary.

Minimum number of total bits: 9 bits

Maximum number of total bits: 12 bits

*3 Data check time

Item	Check time
Monitoring, operation command, frequency setting (RAM)	Less than 12 ms
Parameter read/write, frequency setting (EEPROM)	Less than 30 ms
Parameter clear / All parameter clear	Less than 5 s
Reset command	No reply

◆ Retry count setting (Pr.121, Pr.335)

- Set the permissible number of retries at data receive error occurrence. (Refer to page 489 for data receive error for retry.)
- When the data receive errors occur consecutively and the number of retries exceeds the permissible number setting, a communication fault (PU connector communication: E.PUE, RS-485 terminal communication: E.SER) occurs and the inverter output is shut off.
- When a data transmission error occurs while "9999" is set, the inverter does not shut off its output but outputs the Alarm (LF) signal. To use the LF signal, set "98 (positive logic) or 198 (negative logic)" in any of **Pr.190 to Pr.196 (Output terminal function selection)** to assign the function to an output terminal.

Example: PU connector communication, **Pr. 121** = "1" (initial value)

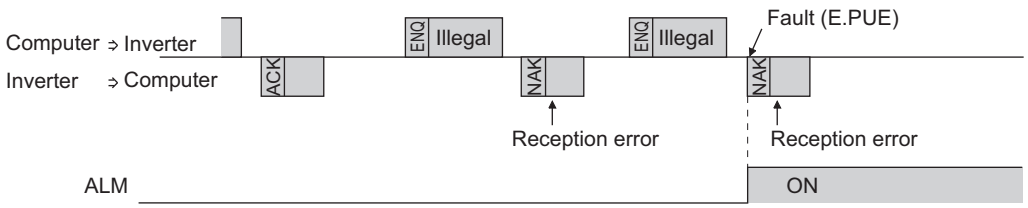

上正科技有限公司
購買、維修 此手冊零組件
電話： 037-466833
Email: service@repairtw.com
Line id: @zzzz
www.repairtw.com

Example: PU connector communication, **Pr. 121** = "9999"

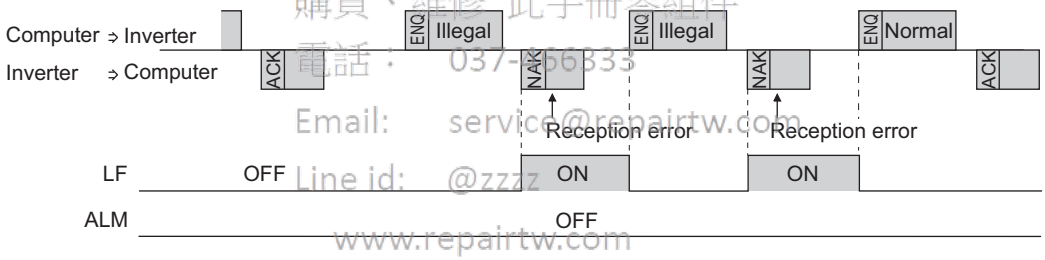

NOTE

- For the RS-485 terminal communication, the operation at a communication error occurrence depends on the **Pr.502 Stop mode selection at communication error** setting. (Refer to page 478.)

◆ Signal loss detection (Pr.122, Pr.336 RS-485 communication check time interval)

- If a signal loss (communication stop) is detected between the inverter and computer as a result of a signal loss detection, a communication error (PU connector communication: E.PUE, RS-485 terminal communication: E.SER) occurs and the inverter output is shut off.
- The LF signal is not output when a signal loss is detected. However, when a signal loss is detected via communication through the RS-485 terminals while **Pr.502** = "3 or 4", the LF signal is output.
- When the setting is "9999", communication check (signal loss detection) is not made.
- When the setting is "0", communication through the PU connector is not possible. The monitor items and parameter settings can be read during communication via RS-485 terminals, but a communication error (E.SER) occurs instantly when the operation mode is switched to the Network operation.
- A signal loss detection is made when the setting is any of "0.1 s to 999.8 s". To make a signal loss detection, it is necessary to send data (for details on control codes, refer to page 487) from the computer within the communication check time interval. (The inverter makes a communication check (clearing of communication check counter) regardless of the station number setting of the data sent from the master).

- Communication check is started at the first communication in the operation mode having the operation source (PU operation mode for PU connector communication in the initial setting or Network operation mode for RS-485 terminal communication).

Example: PU connector communication, **Pr. 122** = "0.1 to 999.8s"

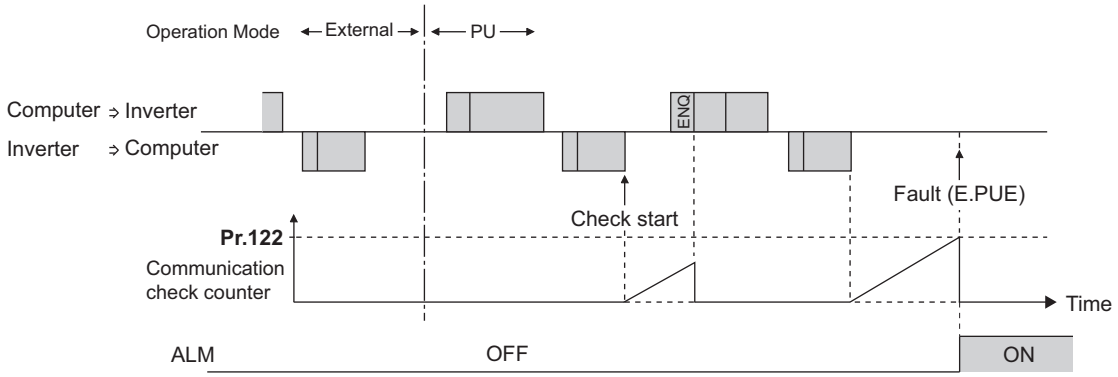

◆ Programming instructions

- When data from the computer has any error, the inverter does not accept that data. Hence, in the user program, always insert a retry program for data error.
- All data communication, for example, run command or monitoring, are started when the computer gives a communication request. The inverter does not return any data without the computer's request. Hence, design the program so that the computer gives a data read request for monitoring, etc. as required.
- Program example: To switch to the Network operation mode

上正科技有限公司
購買、維修 此手冊零組件
電話： 037-466333
Email: service@repairtw.com
Line id: @zzzz
www.repairtw.com

Microsoft® Visual C++® (Ver.6.0) programming example

```
#include <stdio.h>
#include <windows.h>

void main(void){
	HANDLE		hCom;		// Communication handle
	DCB		hDcb;		// Structure for setting communication settings
	COMMTIMEOUTS		hTim;	// Structure for setting timeouts

	char		szTx[0x10];		// Send buffer
	char		szRx[0x10];		// Receive buffer
	char		szCommand[0x10];// Command
	int		nTx,nRx;		// For storing buffer size
	int		nSum;		// For calculating sum code
	BOOL		bRet;
	int		nRet;
	int		i;

	// **** Open COM1 port ****
	hCom = CreateFile("COM1", (GENERIC_READ | GENERIC_WRITE), 0, NULL, OPEN_EXISTING, FILE_ATTRIBUTE_NORMAL, NULL);
	if(hCom != NULL) {
		// **** Set COM1 port communication ****
		GetCommState(hCom,&hDcb);		// Get current communication information
		hDcb.DCBlength = sizeof(DCB);		// Structure size setting
		hDcb.BaudRate  = 19200;		// Communication speed = 19200 bps
		hDcb.ByteSize  = 8;		// Data length = 8 bits
		hDcb.Parity    = 2;		// Parity check at even numbers
		hDcb.StopBits  = 2;		// Stop bit = 2 bits
		bRet = SetCommState(hCom,&hDcb);		// Setting of changed communication information
		if(bRet == TRUE) {
			// **** Set COM1 port timeout ****
			GetCommTimeouts(hCom,&hTim);		// Get current timeout values
			hTim.WriteTotalTimeoutConstant = 1000;		// Write timeout 1 second
			hTim.ReadTotalTimeoutConstant = 1000;		// Read timeout 1 second
			hTim.ReadTotalTimeoutConstantSetCommTimeouts(hCom,&hTim);// Setting of changed timeout values
			// **** Setting of command for switching the station number 1 inverter to the Network operation mode ****
			sprintf(szCommand,"01FB10000");		// Send data (NET operation write)
			nTx = strlen(szCommand);		// Send data size
			// **** Generate sum code ****
			nSum = 0;		// Initialize sum data
			for(i = 0;i < nTx;i++) {
				nSum += szCommand[i];		// Calculate sum code
				nSum &= (0xff);		// Mask data
			}

			// **** Generate send data ****
			memset(szTx,0,sizeof(szTx));		// Initialize send buffer
			memset(szRx,0,sizeof(szRx));		// Initialize receive buffer
			sprintf(szTx,"\5%s%02X",szCommand,nSum);// ENQ code + send data + sum code
			nTx = 1 + nTx + 2;		// ENQ code + number of send data + number of sum codes

			nRet = WriteFile(hCom,szTx,nTx,&nTx,NULL);
			// **** Send ****
			if(nRet != 0) {
				nRet = ReadFile(hCom,szRx,sizeof(szRx),&nRx,NULL);
			// **** Receive ****
				if(nRet != 0) {
					// **** Display receive data ****
					for(i = 0;i < nRx;i++) {
						printf("%02X ",(BYTE)szRx[i]);// Output received data to console
						// Display ASCII code in Hexadecimal' In case of 0', "30" is displayed.
					}
					printf("\n\r");
				}
			}
		}
		CloseHandle(hCom);		// Close communication port
	}
}
```

長正科技有限公司
購買、維修 此手冊零組件
電話： 037-466322
Email: service@repairtw.com
line id: @zzzz
www.repairtw.com

General flowchart

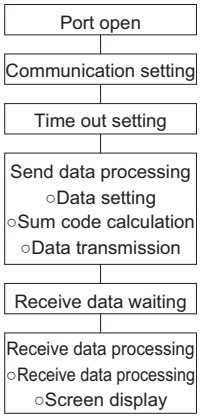

⚠ CAUTION

- Always set the communication check time interval before starting operation to prevent hazardous conditions.
- Data communication is not started automatically but is made only once when the computer provides a communication request. If communication is disabled during operation due to signal cable breakage etc., the inverter cannot be stopped. When the communication check time interval has elapsed, the inverter output will be shut off (E.PUE, E.SER). Turn the RES signal of the inverter ON or shut off the power supply to coast the motor to a stop.
- If communication is broken due to signal cable breakage, computer fault etc., the inverter does not detect such a fault. This should be fully noted.

◆ Setting items and set data

上正科技有限公司
購買、維修 此手冊零組件
電話： 037-466333
Email: service@repairtw.com
Line Id: @222
www.repairtw.com

- After completion of parameter settings, set the instruction codes and data, then start communication from the computer to allow various types of operation control and monitoring.

Item	Read/ write	Instruction code	Data description	Number of data digits (format)*1
Operation mode	Read	H7B	H0000: Network operation H0001: External operation, External operation (JOG operation) H0002: PU operation, External/PU combined operation, PUJOG operation	4 digits (B and E/D)
	Write	HFB	H0000: Network operation (Setting is available via communication through the RS-485 terminals.) H0001: External operation H0002: PU operation (Setting is available via communication through the PU connector.)	4 digits (A and C/D)

Item		Read/ write	Instruction code	Data description	Number of data digits (format)*1
Monitor	Output frequency / speed	Read	H6F	H0000 to HFFFF: Output frequency in 0.01Hz increments (The display can be changed to the rotations per minute using **Pr.37** and **Pr.144**. (Refer to page 288.))	4 digits (B and E/D)
	Output current	Read	H70	H0000 to HFFFF: Output current (hexadecimal) Increment 0.01 A (FR-F820-02330(55K) or lower, FR-F840-01160(55K) or lower) Increment 0.1 A (FR-F820-03160(75K) or higher, FR-F840-01800(75K) or higher)	4 digits (B and E/D)
	Output voltage	Read	H71	H0000 to HFFFF: Output voltage (hexadecimal) in 0.1 V increments	4 digits (B and E/D)
	Special monitor	Read	H72	H0000 to HFFFF: Data of the monitor item selected with the instruction code HF3.	4 digits (B and E/D)
	Special monitor selection No.	Read	H73	Monitor selection data (Refer to page 288 for details on selection No.)	2 digits (B and E1/D)
		Write	HF3		2 digits (A1 and C/D)
	Fault record	Read	H74 to H77	H0000 to HFFFF: Two fault records per code 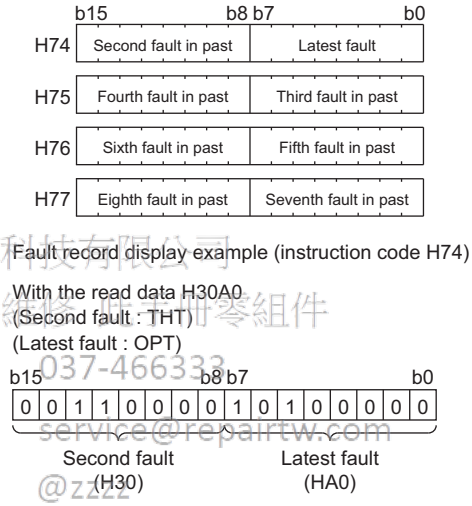 (Refer to page 566 for details on fault record read data.)	4 digits (B and E/D)
Operation command (extended)		Write	HF9	Control input commands such as the Forward rotation command (STF) signal and the Reverse rotation command (STR) signal can be set. (For the details, refer to page 496.)	4 digits (A and C/D)
Operation command		Write	HFA		2 digits (A1 and C/D)
Inverter status monitor (extended)		Read	H79	The status of the output signals such as the Forward rotation output, Reverse rotation output, and Inverter running (RUN) signals can be monitored. (For the details, refer to page 497.)	4 digits (B and E/D)
Inverter status monitor		Read	H7A		2 digits (B and E1/D)
Set frequency (RAM)		Read	H6D	Read the set frequency/speed from the RAM or EEPROM. H0000 to HFFFF: Set frequency in 0.01 Hz increments (The display can be changed to the rotations per minute using **Pr.37** and **Pr.144**. (Refer to page 288.))	4 digits (B and E/D)
Set frequency (EEPROM)			H6E		
Set frequency (RAM)		Write	HED	Write the set frequency/speed into the RAM or EEPROM. H0000 to HE678 (0 to 590.00 Hz): Set frequency in 0.01 Hz increments (The display can be changed to the rotations per minute using **Pr.37** and **Pr.144**. (Refer to page 288.)) • To change the set frequency consecutively, write data to the inverter RAM. (Instruction code: HED)	4 digits (A and C/D)
Set frequency (RAM, EEPROM)			HEE		
Inverter reset		Write	HFD	H9696: Inverter reset • As the inverter is reset at the start of communication by the computer, the inverter cannot send reply data back to the computer.	4 digits (A and C/D)
				H9966: Inverter reset • When data is sent normally, ACK is returned to the computer, and then the inverter is reset.	4 digits (A and D)
Fault history clear		Write	HF4	H9696: Fault history is cleared.	4 digits (A and C/D)

上正科技有限公司
購買、維修、既有零組件
電話：037-466333
Email: service@repairtw.com
Line id: @zzzz
www.repairtw.com

Item	Read/ write	Instruction code	Data description	Number of data digits (format)*1
Parameter clear / All parameter clear	Write	HFC	All parameters return to initial values. Whether to clear communication parameters or not can be selected according to the data. • Parameter clear H9696: Parameters including communication parameters are cleared. H5A5A: Parameters other than communication parameters are cleared.*2 • All parameter clear H9966: Parameters including communication parameters are cleared. H55AA: Parameters other than communication parameters are cleared.*2 For the details of whether or not to clear parameters, refer to page 638. When a clear is performed with H9696 or H9966, communication related parameter settings also return to the initial values. When resuming the operation, set the parameters again. Performing a clear will clear the instruction code HEC, HF3, and HFF settings. Only H9966 and H55AA (All parameter clear) are valid when a password is registered (refer to page 198).	4 digits (A and C/D)
Parameter	Read	H00 to H63	Refer to the instruction code (page 638) and write and/or read parameter values as required. When setting **Pr.100** and later, the link parameter extended setting must be set.	4 digits (B and E/D)
	Write	H80 to HE3		4 digits (A and C/D)
Link parameter extended setting	Read	H7F	Parameter settings are switched according to the H00 to H0D settings. For details of the settings, refer to the instruction code (page 638).	2 digits (B and E1/D)
	Write	HFF		2 digits (A1 and C/D)
Second parameter changing (instruction code HFF = 1, 9)	Read	H6C	When setting the calibration parameters*3 H00: Frequency*4 H01: Parameter-set analog value H02: Analog value input from terminal	2 digits (B and E1/D)
	Write	HEC		2 digits (A1 and C/D)
Multi command	Read/ write	HF0	Available for writing 2 commands, and monitoring 2 items for reading data. (Refer to page 497 for details.)	10 digits (A2 and C1/D)
Product profile: Model	Read	H7C	The model name can be read in ASCII code. "H20" (blank code) is set for blank area. Example) FR-F840-1 (FM type): H46, H52, H2D, H46, H38, H34, H30, H2D, H31, H20, H20 ... H20	20 digits (B and E3/D)
Product profile: Capacity	Read	H7D	The capacity in the inverter model can be read in ASCII code. Data read is displayed in increments of 0.1 kW (rounded down to one decimal place). "H20" (blank code) is set for blank area. Example) 0.75K: " 7" (H20, H20, H20, H20, H20, H37)	6 digits (B and E2/D)

*1 Refer to page 485 for data formats (A, A1, A2, B, C, C1, D, E, E1, E2, E3, F).
*2 Turning OFF the power supply while clearing parameters with H5A5A or H55AA returns the communication parameter settings to the initial settings.
*3 Refer to the following calibration parameter list for details on the calibration parameters.
*4 The gain frequency can be also written using **Pr.125** (instruction code: H99) or **Pr.126** (instruction code: H9A).

上正科技有限公司
購買 維修 此手冊零組件
電話: 02-27416833
Email: service@repair.tw
Line ID: @0272
www.repair.tw

NOTE

- Set 65520 (HFFF0) as a parameter value "8888" and 65535 (HFFFF) as "9999".
- For the instruction codes HFF, HEC, and HF3, their values once written are held, but cleared to zero when an inverter reset or all clear is performed.
- When a 32-bit parameter setting or monitor item is read and the value to be read exceeds HFFFF, HFFFF is returned.

Example) When reading the **C3 (Pr.902)** and **C6 (Pr.904)** settings from the inverter of station No. 0.

	Computer send data	Inverter send data	Description
a	ENQ 00 FF 0 01 7D	ACK 00	"H01" is set in the extended link parameter.
b	ENQ 00 EC 0 01 79	ACK 00	"H01" is set in the second parameter changing.
c	ENQ 00 5E 0 0A	STX 00 0000 ETX 20	**C3 (Pr.902)** is read. 0% is read.
d	ENQ 00 60 0 F6	STX 00 0000 ETX 20	**C6 (Pr.904)** is read. 0% is read.

To read/write **C3 (Pr.902)** or **C6 (Pr.904)** after inverter reset or parameter clear, execute from (a) again.

◆ List of calibration parameters

Pr.	Name	Instruction code		
		Read	Write	Extended
C2 (902)	Terminal 2 frequency setting bias frequency	5E	DE	1
C3 (902)	Terminal 2 frequency setting bias	5E	DE	1
125 (903)	Terminal 2 frequency setting gain frequency	5F	DF	1
C4 (903)	Terminal 2 frequency setting gain	5F	DF	1
C5 (904)	Terminal 4 frequency setting bias frequency	60	E0	1
C6 (904)	Terminal 4 frequency setting bias	60	E0	1
126 (905)	Terminal 4 frequency setting gain frequency	61	E1	1
C7 (905)	Terminal 4 frequency setting gain	61	E1	1
C12 (917)	Terminal 1 bias frequency (speed)	11	91	9
C13 (917)	Terminal 1 bias (speed)	11	91	9
C14 (918)	Terminal 1 gain frequency (speed)	12	92	9
C15 (918)	Terminal 1 gain (speed)	12	92	9
C16 (919)	Terminal 1 bias command (torque)	13	93	9
C17 (919)	Terminal 1 bias (torque)	13	93	9

Pr.	Name	Instruction code		
		Read	Write	Extended
C18 (920)	Terminal 1 gain command (torque)	14	94	9
C19 (920)	Terminal 1 gain (torque)	14	94	9
C8 (930)	Current output bias signal	1E	9E	9
C9 (930)	Current output bias current	1E	9E	9
C10 (931)	Current output gain signal	1F	9F	9
C11 (931)	Current output gain current	1F	9F	9
C38 (932)	Terminal 4 bias command (torque)	20	A0	9
C39 (932)	Terminal 4 bias (torque)	20	A0	9
C40 (933)	Terminal 4 gain command (torque)	21	A1	9
C41 (933)	Terminal 4 gain (torque)	21	A1	9
C42 (934)	PID display bias coefficient	22	A2	9
C43 (934)	PID display bias analog value	22	A2	9
C44 (935)	PID display gain coefficient	23	A3	9
C45 (935)	PID display gain analog value	23	A3	9

上正科技有限公司
購買、維修 此手冊零組件
電話： 037-466333
Email: service@repairtw.com
Line id: @zzzz
www.repairtw.com

◆ Operation command

Item	Instruction code	Bit length	Description[*1*4]	Example
Operation command	HFA	8 bits	b0: AU (Terminal 4 input selection) b1: Forward rotation command b2: Reverse rotation command b3: RL (Low-speed operation command) b4: RM (Middle-speed operation command) b5: RH (High-speed operation command) b6: RT (Second function selection) b7: MRS (Output stop)[*2]	[Example 1] H02 Forward rotation b7 b0 0 0 0 0 0 0 1 0 [Example 2] H00 Stop b7 b0 0 0 0 0 0 0 0 0
Operation command (extended)	HF9	16 bits	b0: AU (Terminal 4 input selection) b1: Forward rotation command b2: Reverse rotation command b3: RL (Low-speed operation command) b4: RM (Middle-speed operation command) b5: RH (High-speed operation command) b6: RT (Second function selection) b7: MRS (Output stop)[*2] b8: JOG (Jog operation selection)[*3] b9: CS (No function)[*3] b10: STP (STOP) (Start self-holding selection)[*3] b11: RES (Selection of automatic restart after instantaneous power failure / flying start)[*3] b12 to b15: –	[Example 1] H0002 Forward rotation b15 b0 0 0 0 0 0 0 0 0 0 0 0 0 0 1 0 [Example 2] H0804 Low-speed reverse operation (When **Pr. 189 RES terminal function selection** is set to "0") b15 b0 0 0 0 0 1 0 0 0 0 0 0 0 0 1 0 0

*1 The signal within parentheses ( ) is the initial status. The description changes depending on the setting of **Pr.180 to Pr.189 (Input terminal function selection)** (page 355).
*2 The Inverter run enable signal is in the initial status for the separated converter type.
*3 JOG operation/automatic restart after instantaneous power failure/start self-holding selection/reset cannot be controlled over a network, so in the initial status bit 8 to bit 11 are invalid. To use bit 8 to bit 11, change the signal by **Pr.185, Pr.186, Pr.188, or Pr.189 (Input terminal function selection)** (page 355) (A reset can be executed by the instruction code HFD.)
*4 During RS-485 communication through the PU connector, only the Forward rotation command and Reverse rotation command signals can be used.

◆ Inverter status monitor

Item	Instruction code	Bit length	Description*1	Example
Inverter status monitor	H7A	8 bits	b0: RUN (Inverter running) b1: Forward rotation output b2: Reverse rotation output b3: SU (Up to frequency) b4: OL (Overload warning) b5: IPF (Instantaneous power failure/undervoltage)*2 b6: FU (Output frequency detection) b7: ABC1 (Fault)	[Example 1] H03 ··· During forward rotation b7 b0 0 0 0 0 0 0 1 1 [Example 2] H80 ··· Stop at fault occurrence b7 b0 1 0 0 0 0 0 0 0
Inverter status monitor (extended)	H79	16 bits	b0: RUN (Inverter running) b1: Forward rotation output b2: Reverse rotation output b3: SU (Up to frequency) b4: OL (Overload warning) b5: IPF (Instantaneous power failure/undervoltage)*2 b6: FU (Output frequency detection) b7: ABC1 (Fault) b8: ABC2 (–) b9: Safety monitor output b10 to b14: ÷ b15: Fault occurrence	[Example 1] H0003 ···During forward rotation b15 b0 0 0 0 0 0 0 0 0 0 0 0 0 0 0 1 1 [Example 2] H8080 ···Stop at fault occurrence b15 b0 1 0 0 0 0 0 0 0 1 0 0 0 0 0 0 0

上止科技有限公司
購買 維修 此手冊零組件
電話: 037-466333
Email: service@repairtw.com
Line id: @zzzz
www.repairtw.com

*1 The signal within parentheses ( ) is the initial status. The description changes depending on the setting of **Pr.190 to Pr.196 (Output terminal function selection)**.
*2 No function is assigned in the initial status for the separated converter type.

◆ Multi command (HF0)

- Sending data format from computer to inverter

Format	Number of characters																		
	1	2	3	4	5	6	7	8	9	10	11	12	13	14	15	16	17	18	19
A2	ENQ	Inverter station No.		Instruction code (HF0)		Time delay	Send data type*1	Receive data type*2	Data 1*3				Data 2*3				Sum check		CR/LF

- Reply data format from inverter to computer (No data error detected)

Format	Number of characters																		
	1	2	3	4	5	6	7	8	9	10	11	12	13	14	15	16	17	18	19
C1	STX	Inverter station No.		Send data type*1	Receive data type*2	Error code 1*5	Error code 2*5	Data 1*4				Data 2*4				ETX	Sum check		CR/LF

*1 Specify the data type of sending data (from computer to inverter).
*2 Specify the data type of reply data (from inverter to computer).
*3 Combination of data 1 and data 2 for sending

Data type	Data 1	Data 2	Remarks
0	Operation command (extended)	Set frequency (RAM)	Run command (extended) is same as instruction code HF9. (Refer to page 496.)
1	Operation command (extended)	Set frequency (RAM, EEPROM)	

*4 Combination of data 1 and data 2 for reply

Data type	Data 1	Data 2	Remarks
0	Inverter status monitor (extended)	Output frequency (speed)	Inverter status monitor (extended) is same as instruction code H79. (Refer to page 497.) Replies the monitor item specified in instruction code HF3 for special monitor. (Refer to page 288.)
1	Inverter status monitor (extended)	Special monitor	

*5 The error code for sending data 1 is set in error code 1, and the error code for sending data 2 is set in error code 2. Mode error (HA), instruction code error (HB), data range error (HC) or no error (HF) is replied. (Refer to page 566 for the details of the error codes.)

5.12.6 MODBUS RTU communication specification

Operation by MODBUS RTU communication or parameter setting is possible by using the MODBUS RTU communication protocol through the RS-485 terminals of the inverter.

Pr.	Name	Initial value	Setting range	Description	
331 N030	**RS-485 communication station number**	0	0	Broadcast communication	
			1 to 247	Specify the inverter station number. Enter the inverter station numbers when two or more inverters are connected to one personal computer.	
332 N031	**RS-485 communication speed**	96	3, 6, 12, 24, 48, 96, 192, 384, 576, 768, 1152	Select the communication speed. The setting value × 100 equals the communication speed. For example, enter 96 to set the communication speed of 9600 bps.	
N033	**RS-485 communication stop bit length**	1	0	Stop bit length 1 bit	Valid when **Pr.N034 (Pr.334)** = "0"
			1	Stop bit length 2 bits	
333	**RS-485 communication stop bit length / data length**	1	0	Stop bit length 1 bit	Valid when **Pr.334** = "0"
			1	Stop bit length 2 bits	
			10	Stop bit length 1 bit	
			11	Stop bit length 2 bits	
334 N034	**RS-485 communication parity check selection**	2	0	Without parity check Stop bit length 1 bit / 2 bits (depends on the setting of **Pr.333**)	
			1	With parity check at odd numbers. Stop bit length: 1 bit.	
			2	With parity check at even numbers. Stop bit length: 1 bit.	
343 N080	**Communication error count**	0	—	Displays the communication error count during MODBUS RTU communication. Read-only.	
539 N002	**MODBUS RTU communication check time interval**	9999	0	MODBUS RTU communication is available, but the inverter output is shut off in the NET operation mode.	
			0.1 to 999.8 s	Set the interval of the communication check (signal loss detection) time (Same specifications as **Pr.122**)	
			9999	No communication check (signal loss detection)	
549 N000	**Protocol selection**	0	0	Mitsubishi inverter protocol (computer link)	
			1	MODBUS RTU protocol	
			2	BACnet MS/TP protocol	

上正科技有限公司
購買、維修 此上相關資訊
電話： 037-466333
Email: service@repairtw.com
Line Id: @zzzz
www.repairtw.com

NOTE

- To use the MODBUS RTU protocol, set "1" in **Pr.549 Protocol selection**.
- If MODBUS RTU communication is performed from the master to the address 0 (station number 0), the data is broadcasted, and the inverter does not send any reply to the master. To obtain replies from the inverter, set **Pr.331 RS-485 communication station number** ≠ "0 (initial value)".
  Some functions are disabled in broadcast communication. (Refer to page 500.)
- If a communication option is installed with **Pr.550 NET mode operation command source selection** = "9999 (initial value)", commands (operation commands) transmitted via RS-485 terminals become invalid. (Refer to page 239.)

◆ Communication specifications

- The communication specifications are shown in the following table.

Item		Description	Related parameter
Communication protocol		MODBUS RTU protocol	**Pr.549**
Conforming standard		EIA-485 (RS-485)	**—**
Number of connectable units		1: N (maximum 32 units), setting is 0 to 247 stations	**Pr.331**
Communication speed		Selected among 300/600/1200/2400/4800/9600/19200/38400/57600/76800/115200 bps.	**Pr.332**
Control procedure		Asynchronous method	**—**
Communication method		Half-duplex system	**—**
Communication specifications	**Character system**	Binary (fixed at 8 bits)	**—**
	Start bit	1 bit	**—**
	Stop bit length	Select from the following three types: No parity check, stop bit length 1 bit / 2 bits (depends on the setting of **Pr.333**). Odd parity check, stop bit length 1 bit. Even parity check, stop bit length 1 bit.	**Pr.333** **Pr.334**
	Parity check		
	Error check	CRC code check	**—**
	Terminator	Not available	**—**
Time delay setting		Not available	**—**

◆ Outline

- The MODBUS communication protocol was developed by Modicon for programmable controllers.
- The MODBUS protocol uses exclusive message frames to perform serial communication between a master and slaves. These exclusive message frames are provided with a feature called "functions" that allows data to be read or written. These functions can be used to read or write parameters from the inverter, write input commands to the inverter or check the inverter's operating status, for example. This product classifies the data of each inverter into holding register area (register address 40001 to 49999). The master can communicate with inverters (slaves) by accessing pre-assigned holding register addresses.

上正科技有限公司
購買、維修、此手冊零組件
電話： 037-466333
Email: service@repairtw.com
Line id: @2222
www.repairtw.com

NOTE

- There are two serial transmission modes, the ASCII (American Standard Code for Information Interchange) mode and the RTU (Remote Terminal Unit) mode. However, this product supports only the RTU mode, which transfers 1 byte data (8 bits) as it is. Also, only communication protocol is defined by the MODBUS protocol. Physical layers are not stipulated.

◆ Message format

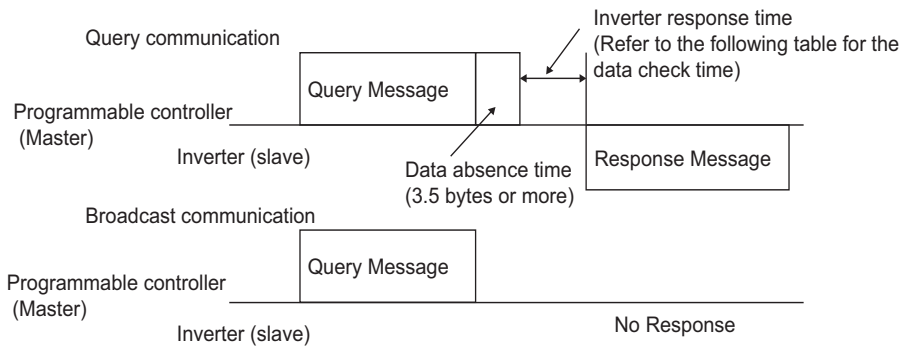

- Data check time

Item	Check time
Monitoring, operation command, frequency setting (RAM)	Less than 12 ms
Parameter read/write, frequency setting (EEPROM)	Less than 30 ms
Parameter clear / All parameter clear	< 5 s
Reset command	No reply

- Query

  A message is sent to the slave (the inverter) having the address specified by the master.

- Normal response
  After the query from the master is received, the slave executes the request function, and returns the corresponding normal response to the master.
- Error Response
  When an invalid function code, address or data is received by the slave, the error response is returned to the master.
  This response is appended with an error code that indicates the reason why the request from the master could not be executed.
  This response cannot be returned for errors, detected by the hardware, frame error and CRC check error.
- Broadcast
  The master can broadcast messages to all slaves by specifying address 0. All slaves that receive a message from the master execute the requested function. With this type of communication, slaves do not return a response to the master.

NOTE

- During broadcast communication, functions are executed regarded of the set inverter station number (**Pr.331**).

◆ Message frame (protocol)

- Communication method
  Basically, the master sends a query message (inquiry), and slaves return a response message (response). At normal communication, the device address and function code are copied as they are, and at erroneous communication (illegal function code or data code), bit 7 (= H80) of the function code is turned ON, and the error code is set at data bytes.

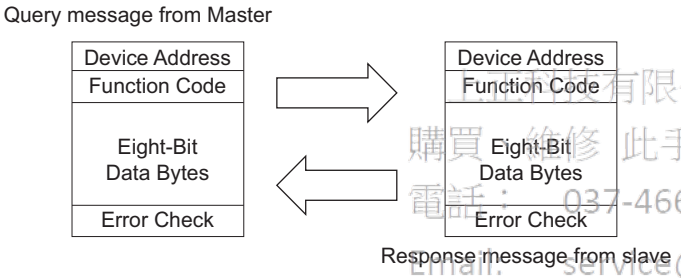

上川企業有限公司
購買 維修 此手冊零組件
電話： 037-466333
Email: service@repairtw.com
Line Id: @2222
www.repairtw.com

Message frames comprise the four message fields shown in the figures above.
A slave recognizes message data as one message when a 3.5 character long no-data time (T1: start/end) is added before and after the data.

- Details of protocol
  The following table explains the four message fields.

Start	Address	Function	Data	CRC check		End
T1	8 bits	8 bits	n × 8 bits	L 8 bits	H 8 bits	T1

Message field	Description
Address field	"0 to 247" can be set in the single-byte (8-bit) length field. Set "0" when sending broadcast messages (instructions to all addresses), and "1 to 247" to send messages to individual slaves. The response from the slave also contains the address set by the master. The value set in **Pr.331 RS-485 communication station number** is the slave address.
Function field	"1 to 255" can be set as the function code in the single-byte (8-bit) length filed. The master sets the function to be sent to the slave as the request, and the slave performs the requested operation. Refer to the function code list for details of the supported function codes. An error response is generated when a function code other than those in the function code list is set. The normal response from the slave contains the function code set by the master. The error response contains H80 and the function code.
Data field	The format changes according the function code. (Refer to page 501.) The data, for example, includes the byte count, number of bytes, and accessing content of holding registers.
CRC check field	Errors in the received message frame are detected. Errors are detected in the CRC check, and the 2 bytes length data is appended to the message. When the CRC is appended to the message, the lower bytes of the CRC are appended first, followed by the upper bytes. The CRC value is calculated by the sender that appends the CRC to the message. The receiver recalculates the CRC while the message is being received, and compares the calculation result against the actual value that was received in the error check field. If the two values do not match, the result is treated as an error.

◆ Function code list

Function name	Read/ write	Code	Outline	Broadcast communication	Message format reference page
Read holding register	Read	H03	The data of the holding registers is read. The various data of the inverter can be read from MODBUS registers. System environmental variable (Refer to page 506.) Real time monitor (Refer to page 289.) Fault history (Refer to page 508.) Product profile (Refer to page 508.) Inverter parameters (Refer to page 507.)	Not available	page 501
Preset single register	Write	H06	Data is written to a holding register. Data can be written to MODBUS registers to output instructions to the inverter or set parameters. System environmental variable (Refer to page 506.) Inverter parameters (Refer to page 507.)	Available	page 502
Diagnostics	Read	H08	Functions are diagnosed. (communication check only) A communication check can be made since the query message is sent and the query message is returned as it is as the return message (subfunction code H00 function). Subfunction code H00 (Return query data)	Not available	page 502
Preset multiple registers	Write	H10	Data is written to multiple consecutive holding registers. Data can be written to consecutive multiple MODBUS registers to output instructions to the inverter or set parameters. System environmental variable (Refer to page 506.) Inverter parameters (Refer to page 507.)	Available	page 503
Read holding register access log	Read	H46	The number of registers that were successfully accessed by the previous communication is read. Queries by function codes H03 and H10 are supported. The number and start address of holding registers successfully accessed by the previous communication are returned. "0" is returned for both the number and start address for queries other than function code H03 and H10.	Not available	page 504

台灣原廠服務公司
購買、維修此產品請至網站
電話： 037-406333
Email: service@repairtw.com
Line id: @zzzz
www.repairtw.com

◆ Read holding register (reading data of holding registers) (H03 or 03)

- Query message

a. Slave address	b. Function	c. Starting address		d. No. of points		CRC check	
(8 bits)	H03 (8 bits)	H (8 bits)	L (8 bits)	H (8 bits)	L (8 bits)	L (8 bits)	H (8 bits)

- Normal response (Response message)

a. Slave address	b. Function	e. Byte count	f. Data			CRC check	
(8 bits)	H03 (8 bits)	(8 bits)	H (8 bits)	L (8 bits)	... (n × 16 bits)	L (8 bits)	H (8 bits)

- Query message setting

Message		Description
a	Slave address	Set the address to send messages to. Broadcast communication is not possible. (Invalid when "0" is set.)
b	Function	Set H03.
c	Starting address	Set the holding register address from which to start reading the data. Starting address = start register address (decimal) - 40001 For example, when starting register address 0001 is set, the data of holding register address 40002 is read.
d	No. of points	Set the number of holding registers for reading data. Data can be read from up to 125 registers.

- Content of normal response

Message		Description
e	Byte count	The setting range is H02 to HFA (2 to 250). Twice the number of reads specified by (d) is set.
f	Data	The amount of data specified by (d) is set. Read data is output Hi bytes first followed by Lo bytes, and is arranged as follows: data of start address, data of start address+1, data of start address+2, and so forth.

■ Example) Read the register values of 41004 (Pr.4) to 41006 (Pr.6) from slave address 17 (H11).

Query message

Slave address	Function	Starting address		No. of points		CRC check	
H11 (8 bits)	H03 (8 bits)	H03 (8 bits)	HEB (8 bits)	H00 (8 bits)	H03 (8 bits)	H77 (8 bits)	H2B (8 bits)

Normal response (Response message)

Slave address	Function	Byte count	Data						CRC check	
H11 (8 bits)	H03 (8 bits)	H06 (8 bits)	H17 (8 bits)	H70 (8 bits)	H0B (8 bits)	HB8 (8 bits)	H03 (8 bits)	HE8 (8 bits)	H2C (8 bits)	HE6 (8 bits)

Read value

Register 41004 **(Pr.4)**: H1770 (60.00 Hz)

Register 41005 **(Pr.5)**: H0BB8 (30.00 Hz)

Register 41006 **(Pr.6)**: H03E8 (10.00 Hz)

◆ Preset single register (writing data to holding registers) (H06 or 06)

- The content of the system environmental variables and inverter parameters (refer to page 505) assigned to the holding register area can be written.
- Query message

a. Slave address	b. Function	c. Register address		d. Preset data		CRC check	
(8 bits)	H06 (8 bits)	H (8 bits)	L (8 bits)	H (8 bits)	L (8 bits)	L (8 bits)	H (8 bits)

- Normal response (Response message)

a. Slave address	b. Function	c. Register address		d. Preset data		CRC check	
(8 bits)	H06 (8 bits)	H (8 bits)	L (8 bits)	H (8 bits)	L (8 bits)	L (8 bits)	H (8 bits)

上正科技有限公司
購買、維修 此手冊零組件
電話： 037-466333
Email: service@repairtw.com
Line id: @zzz
www.repairtw.com

- Query message setting

Message		Description
a	Slave address	Set the address to send messages to. Setting "0" enables broadcast communication.
b	Function	Set H06.
c	Register address	Set the holding register address to write data to. Register address = holding register address (decimal) - 40001 For example, when register address 0001 is set, data is written to holding register address 40002.
d	Preset Data	Set the data to write to the holding register. Write data is fixed at 2 bytes.

- Content of normal response

  The contents in the normal response (**a to d**, including the CRC check) are the same as those in the query messages.

  In the case of broadcast communication, no response is returned.

■ Example) Write 60 Hz (H1770) to 40014 (running frequency RAM) of slave address 5 (H05).

Query message

Slave address	Function	Register address		Preset data		CRC check	
H05 (8 bits)	H06 (8 bits)	H00 (8 bits)	H0D (8 bits)	H17 (8 bits)	H70 (8 bits)	H17 (8 bits)	H99 (8 bits)

Normal response (Response message)

The same data as those in the query message

NOTE

- With broadcast communication, no response is generated even if a query is executed, so when the next query is made, it must be made after waiting for the inverter data processing time after the previous query is executed.

◆ Diagnostics (diagnosis of functions) (H08 or 08)

- A communication check can be made since the query message is sent and the query message is returned as it is as the return message (subfunction code H00 function). Subfunction code H00 (Return query data)

- Query message

a. Slave address	b. Function	c. Subfunction		d. Data		CRC check	
(8 bits)	H08 (8 bits)	H00 (8 bits)	H00 (8 bits)	H (8 bits)	L (8 bits)	L (8 bits)	H (8 bits)

- Normal response (Response message)

a. Slave address	b. Function	c. Subfunction		d. Data		CRC check	
(8 bits)	H08 (8 bits)	H00 (8 bits)	H00 (8 bits)	H (8 bits)	L (8 bits)	L (8 bits)	H (8 bits)

- Query message setting

Message		Description
a	Slave address	Set the address to send messages to. Broadcast communication is not possible. (Invalid when "0" is set.)
b	Function	Set H08.
c	Subfunction	Set H0000.
d	Data	Any 2-byte long data can be set. The setting range is H0000 to HFFFF.

- Content of normal response

  The contents in the normal response (**a to d**, including the CRC check) are the same as those in the query messages.

NOTE

- With broadcast communication, no response is generated even if a query is executed, so when the next query is made, it must be made after waiting for the inverter data processing time after the previous query is executed.

◆ Preset multiple registers (writing data to multiple holding registers) (H10 or 16)

上正科技有限公司
購買 維修 此手冊零組件
電話： 037-466333
Email: service@repairtw.com
Line Id: @szzz
www.repairtw.com

- Data can be written to multiple holding registers.
- Query message

a. Slave address	b. Function	c. Starting address		d. No. of registers		e. Byte count	f. Data			CRC check	
(8 bits)	H10 (8 bits)	H (8 bits)	L (8 bits)	H (8 bits)	L (8 bits)	(8 bits)	H (8 bits)	L (8 bits)	... (n × 2 × 8 bits)	L (8 bits)	H (8 bits)

- Normal response (Response message)

a. Slave address	b. Function	c. Starting address		d. No. of registers		CRC check	
(8 bits)	H10 (8 bits)	H (8 bits)	L (8 bits)	H (8 bits)	L (8 bits)	L (8 bits)	H (8 bits)

- Query message setting

Message		Description
a	Slave address	Set the address to send messages to. Setting "0" enables broadcast communication.
b	Function	Set H10.
c	Starting address	Set the holding register address from which to start writing the data. Starting address = start register address (decimal) - 40001 For example, when starting register address 0001 is set, the data of holding register address 40002 is read.
d	No. of registers	Set the number of holding registers for writing data. Data can be written to up to 125 registers.
e	Byte count	The setting range is H02 to HFA (2 to 250). Set twice the value specified by **d**.
f	Data	Set the amount of data specified by **d**. Write data is output Hi bytes first followed by Lo bytes, and is arranged as follows: data of start address, data of start address+1, data of start address+2, and so forth.

- Content of normal response

  The contents in the normal response (**a to d**, including the CRC check) are the same as those in the query messages.

■ Example) Write 0.5 s (H05) to 41007 (Pr.7) and 1 s (H0A) to 41008 (Pr.8) of slave address 25 (H19).

Query message

Slave address	Function	Starting address		No. of registers		Byte count	Data				CRC check	
H19 (8 bits)	H10 (8 bits)	H03 (8 bits)	HEE (8 bits)	H00 (8 bits)	H02 (8 bits)	H04 (8 bits)	H00 (8 bits)	H05 (8 bits)	H00 (8 bits)	H0A (8 bits)	H86 (8 bits)	H3D (8 bits)

Normal response (Response message)

Slave address	Function	Starting address		No. of registers		CRC check	
H19 (8 bits)	H10 (8 bits)	H03 (8 bits)	HEE (8 bits)	H00 (8 bits)	H02 (8 bits)	H22 (8 bits)	H61 (8 bits)

◆ Read holding register access log (H46 or 70)

- Queries by function codes H03 and H10 are supported. The number and start address of holding registers successfully accessed by the previous communication are returned. "0" is returned for both the number and start address for queries other than the function codes above.
- Query message

a. Slave address	b. Function	CRC check	
(8 bits)	H46 (8 bits)	L (8 bits)	H (8 bits)

- Normal response (Response message)

a. Slave address	b. Function	c. Starting address		d. No. of points		CRC check	
(8 bits)	H46 (8 bits)	H (8 bits)	L (8 bits)	H (8 bits)	L (8 bits)	L (8 bits)	H (8 bits)

上正科技有限公司
購買、維修 此手冊零組件
電話： 037-466333
Email: service@repairtw.com
line id: @zzzz
www.repairtw.com

- Query message setting

Message		Description
a	Slave address	Set the address to send messages to. Broadcast communication is not possible. (Invalid when "0" is set.)
b	Function	Set H46.

- Content of normal response

Message		Description
c	Starting address	The start address of the holding register that was successfully accessed is returned. Starting address = start register address (decimal) - 40001 For example, when starting address 0001 is returned, the holding register address that was successfully accessed is 40002.
d	No. of points	The number of holding registers that were successfully accessed is returned.

■ Example) Read the successful register start address and number of successful accesses from slave address 25 (H19).

Query message

Slave address	Function	CRC check	
H19 (8 bits)	H46 (8 bits)	H8B (8 bits)	HD2 (8 bits)

Normal response (Response message)

Slave address	Function	Starting address		No. of points		CRC check	
H19 (8 bits)	H10 (8 bits)	H03 (8 bits)	HEE (8 bits)	H00 (8 bits)	H02 (8 bits)	H22 (8 bits)	H61 (8 bits)

The number of holding registers that were successfully accessed was returned as two with the start address 41007 **(Pr.7)**.

◆ Error response

- An error response is returned if the query message received from the master contains an illegal function, address or data. No response is returned for parity, CRC, overrun, framing, and busy errors.

NOTE

- No response is also returned in the case of broadcast communication.

- Error response (Response message)

a. Slave address	b. Function	c. Exception code	CRC check	
(8 bits)	H80 + Function (8 bits)	(8 bits)	L (8 bits)	H (8 bits)

	Message	Description
a	Slave address	Set the address received from the master.
b	Function	The function code requested by the master and H80 is set.
c	Exception code	The codes in the following table are set.

- Error code list

Code	Error item	Error description
01	ILLEGAL FUNCTION	The query message from the master has a function code that cannot be handled by the slave.
02	ILLEGAL DATA ADDRESS*1	The query message from the master has a register address that cannot be handled by the slave. (No parameter, parameter cannot be read, parameter cannot be written)
03	ILLEGAL DATA VALUE	The query message from the master has data that cannot be handled by the slave. (Out of parameter write range, a mode is specified, or other error)

*1 An error response is not returned in the following cases:

(a) Function code H03 (reading data of holding registers)

When the number of registers is specified as one or more and there are one or more holding registers from which data can be read

(b) Function code H10 (writing data to multiple holding registers)

When the number of registers is specified as one or more and there are one or more holding registers to which data can be written.

In other words, when function code H03 or H10 is used and multiple holding registers are accessed, an error response is not returned even if a nonexistent holding register or holding register that cannot be read or written from/to is accessed.

上正科技有限公司
購買、維修 此手冊零組件
電話： 037-466333
Email: service@repairtw.com
Line id: @zzzz
www.repairtw.com

NOTE

- An error response is returned if none of the accessed holding registers exist. When an accessed holding register does not exist, the read value is 0 and the written data is invalid.

- Error detection of message data

  The following errors are detected in message data from the master. The inverter output is not shut off even if an error is detected.

Error check items

Error item	Error description	Inverter operation
Parity error	The data received by the inverter is different from the specified parity (**Pr.334** setting).	When this error occurs, **Pr.343** is incremented by one. When this error occurs, the LF signal is output.
Framing error	The data received by the inverter is different from the stop bit length (**Pr.333**/**Pr.334**) setting.	
Overrun error	The next data has been sent by the master before the inverter completes receiving the preceding data.	
Message frame error	The data length of the message frame is checked, and an error is generated if the received data length is less than 4 bytes.	
CRC check error	An error is generated if the data in the message frame does not match the calculation result.	

NOTE

- The LF signal can be assigned to an output terminal by setting **Pr.190 to Pr.196 (Output terminal function selection)**. Changing the terminal assignment may affect other functions. Set parameters after confirming the function of each terminal.

◆ MODBUS register

- The following shows the MODBUS registers for system environment variables (read/write), real time monitor items (read), parameters (read/write), fault history data (read/write), and model information monitor items (read).

- System environment variables

Register	Definition	Read/write	Remarks
40002	Inverter reset	Write	Any value
40003	Parameter clear	Write	Set H965A.
40004	All parameter clear	Write	Set H99AA.
40006	Parameter clear*1	Write	Set H5A96.
40007	All parameter clear*1	Write	Set HAA99.
40009	Inverter status / control input command*2	Read/write	Refer to the following.
40010	Operation mode / inverter setting*3	Read/write	Refer to the following.
40014	Running frequency (RAM value)	Read/write	The display can be changed to the rotations per minute using **Pr.37** and **Pr.144**. (Refer to page 288.)
40015	Running frequency (EEPROM value)	Write	

*1 Settings in the communication parameters are not cleared.
*2 The data is written as a control input command for writing.
The data is read as the inverter status for reading.
*3 The data is written as an operation mode setting for writing.
The data is read as the operation mode status for reading.

[Inverter status / control input command]

Bit	Definition	
	Control input command	Inverter status
0	Stop command	RUN (Inverter running)*6
1	Forward rotation command	Forward rotation output
2	Reverse rotation command	Reverse rotation output
3	RH (High-speed command)*4	SU (Up to frequency)*6
4	RM (Middle-speed operation command)*4	OL (Overload)*6
5	RL (Low-speed operation command)*4	IPF (Instantaneous power failure)*6*7
6	JOG (JOG operation)*4	FU (Frequency detection)*6
7	RT (Second function selection)*4	ABC1 (Fault)*6
8	AU (Current input selection)*4	ABC2 (-)*6
9	CS (No function)*4	Safety monitor output
10	MRS (Output stop)*4*5	0
11	STP (STOP) (Start self-holding)*4	0
12	RES (Inverter reset)*4	0
13	0	0
14	0	0
15	0	Fault occurrence

上揚科技有限公司
購買、維修此手冊零組件
電話：037-466333
Email: service@repairtw.com
Line id: @zzzz
www.repairtw.com

*4 The signal within parentheses ( ) is the initial status. The description changes depending on the setting of **Pr.180 to Pr.189 (Input terminal function selection)** (page 355).
The signals assigned to the input terminals may be valid or invalid in the NET operation mode. (Refer to page 243.)
*5 The Inverter run enable signal is in the initial status for the separated converter type.
*6 The signal within parentheses ( ) is the initial status. The description changes depending on the setting of **Pr.190 to Pr.196 (Output terminal function selection)** (page 312).
*7 No function is assigned in the initial status for the separated converter type.

[Operation mode / inverter setting]

Mode	Read value	Write value
EXT	H0000	H0010*8
PU	H0001	H0011*8
EXT JOG	H0002	—
PU JOG	H0003	—
NET	H0004	H0014
PU + EXT	H0005	—

*8 Writing is available depending on the **Pr.79** and **Pr.340** settings. For the details, refer to page 237.
Restrictions in each operation mode conform with the computer link specification.

- Real time monitor

Refer to page 288 for the register numbers and monitor items of the real time monitor.

- Parameter

Pr.	Register	Name	Read/write	Remarks
0 to 999	41000 to 41999	For details on parameter names, refer to the parameter list (page 132).	Read/write	The parameter number + +41000 is the register number.
C2 (902)	41902	Terminal 2 frequency setting bias (frequency)	Read/write	
C3 (902)	42092	Terminal 2 frequency setting bias (analog value)	Read/write	Analog value (%) set to **C3 (902)**
	43902	Terminal 2 frequency setting bias (terminal analog value)	Read	Analog value (%) of the voltage (current) applied to terminal 2
125 (903)	41903	Terminal 2 frequency setting gain (frequency)	Read/write	
C4 (903)	42093	Terminal 2 frequency setting gain (analog value)	Read/write	Analog value (%) set in **C4 (903)**
	43903	Terminal 2 frequency setting gain (terminal analog value)	Read	Analog value (%) of the voltage (current) applied to terminal 2
C5 (904)	41904	Terminal 4 frequency setting bias (frequency)	Read/write	
C6 (904)	42094	Terminal 4 frequency setting bias (analog value)	Read/write	Analog value (%) set in **C6 (904)**
	43904	Terminal 4 frequency setting bias (terminal analog value)	Read	Analog value (%) of the current (voltage) applied to terminal 4
126 (905)	41905	Terminal 4 frequency setting gain (frequency)	Read/write	
C7 (905)	42095	Terminal 4 frequency setting gain (analog value)	Read/write	Analog value (%) set in **C7 (905)**
	43905	Terminal 4 frequency setting gain (terminal analog value)	Read	Analog value (%) of the current (voltage) applied to terminal 4
C12 (917)	41917	Terminal 1 bias frequency (speed)	Read/write	
C13 (917)	42107	Terminal 1 bias (speed)	Read/write	Analog value (%) set in **C13 (917)**
	43917	Terminal 1 bias (speed) (terminal analog value)	Read	Analog value (%) of voltage applied to terminal 1
C14 (918)	41918	Terminal 1 gain frequency (speed)	Read/write	
C15 (918)	42108	Terminal 1 gain (speed)	Read/write	Analog value (%) set in **C15 (918)**
	43918	Terminal 1 gain (speed) (terminal analog value)	Read	Analog value (%) of voltage applied to terminal 1
C16 (919)	41919	Terminal 1 bias command (torque)	Read/write	
C17 (919)	42109	Terminal 1 bias (torque)	Read/write	Analog value (%) set in **C17 (919)**
	43919	Terminal 1 bias (torque) (terminal analog value)	Read	Analog value (%) of voltage applied to terminal 1
C18 (920)	41920	Terminal 1 gain command (torque)	Read/write	
C19 (920)	42110	Terminal 1 gain (torque)	Read/write	Analog value (%) set in **C19 (920)**
	43920	Terminal 1 gain (torque) (terminal analog value)	Read	Analog value (%) of voltage applied to terminal 1
C8 (930)	41930	Current output bias signal	Read/write	
C9 (930)	42120	Current output bias current	Read/write	Analog value (%) set in **C9 (930)**
C10 (931)	41931	Current output gain signal	Read/write	
C11 (931)	42121	Current output gain current	Read/write	Analog value (%) set in **C11 (931)**
C38 (932)	41932	Terminal 4 bias command (torque)	Read/write	
C39 (932)	42122	Terminal 4 bias (torque)	Read/write	Analog value (%) set in **C39 (932)**
	43932	Terminal 4 bias (torque) (terminal analog value)	Read	Analog value (%) of the current (voltage) applied to terminal 4
C40 (933)	41933	Terminal 4 gain command (torque)	Read/write	
C41 (933)	42123	Terminal 4 gain (torque)	Read/write	Analog value (%) set in **C41 (933)**
	43933	Terminal 4 gain (torque) (terminal analog value)	Read	Analog value (%) of the current (voltage) applied to terminal 4
C42 (934)	41934	PID display bias coefficient	Read/write	
C43 (934)	42124	PID display bias analog value	Read/write	Analog value (%) set in **C43 (934)**
	43934	PID display bias analog value (terminal analog value)	Read	Analog value (%) of the current (voltage) applied to terminal 4
C44 (935)	41935	PID display gain coefficient	Read/write	

上正科技有限公司
購買、維修 此手冊零組件
電話： 037-466333
Email: service@repairtw.com
Line id: @zzzz
www.repairtw.com

Pr.	Register	Name	Read/write	Remarks
C45 (935)	42125	PID display gain analog value	Read/write	Analog value (%) set in **C45 (935)**
	43935	PID display gain analog value (terminal analog value)	Read	Analog value (%) of the current (voltage) applied to terminal 4
1000 to 1999	45000 to 45999	For details on parameter names, refer to the parameter list (page 132).	Read/write	The parameter number + 44000 is the register number.

- Fault history

Register	Definition	Read/write	Remarks
40501	Fault record 1	Read/write	Being 2 bytes in length, the data is stored as H00○○. Refer to the lowest 1 byte for the error code. (For details on error codes, refer to page 566.) The fault history is cleared by writing to register 40501. Set any value as data.
40502	Fault record 2	Read	
40503	Fault record 3	Read	
40504	Fault record 4	Read	
40505	Fault record 5	Read	
40506	Fault record 6	Read	
40507	Fault record 7	Read	
40508	Fault record 8	Read	

- Product profile

Register	Definition	Read/write	Remarks
44001	Model (1st and 2nd characters)	Read	The inverter model can be read in ASCII code. "H20" (blank code) is set for blank area. Example) FR-F840-1 (FM type): H46, H52, H2D, H46, H38, H34, H30, H2D, H31, H20.....H20
44002	Model (3rd and 4th characters)	Read	
44003	Model (5th and 6th characters)	Read	
44004	Model (7th and 8th characters)	Read	
44005	Model (9th and 10th characters)	Read	
44006	Model (11th and 12th characters)	Read	
44007	Model (13th and 14th characters)	Read	
44008	Model (15th and 16th characters)	Read	
44009	Model (17th and 18th characters)	Read	
44010	Model (19th and 20th characters)	Read	
44011	Capacity (1st and 2nd characters)	Read	The capacity in the inverter model can be read in ASCII code. Data is read in increments of 0.1 kW, and rounds down to 0.01 kW increments. "H20" (blank code) is set for blank area. Example) 0.75K: " 7" (H20, H20, H20, H20, H20, H37)
44012	Capacity (3rd and 4th characters)	Read	
44013	Capacity (5th and 6th characters)	Read	

上竹科技有限公司
購買、維修 此手冊零組件
電話: 037-466333
Email: service@repairtw.com
Line id: @zzzz
www.repairtw.com

NOTE

- When a 32-bit parameter setting or monitor item is read and the value to be read exceeds HFFFF, HFFFF is returned.

◆ Pr.343 Communication error count

- The communication error occurrence count can be checked.

Parameter	Setting range	Minimum setting range	Initial value
343	(Read-only)	1	0

NOTE

- The communication error count is temporarily stored in the RAM memory. The value is not stored in EEPROM, and so is cleared to 0 when power is reset and the inverter is reset.

◆ Alarm (LF) signal output (communication error warning)

- During a communication error, the Alarm (LF) signal is output by open collector output. Assign the terminal to be used using any of **Pr.190 to Pr.196 (Output terminal function selection)**.

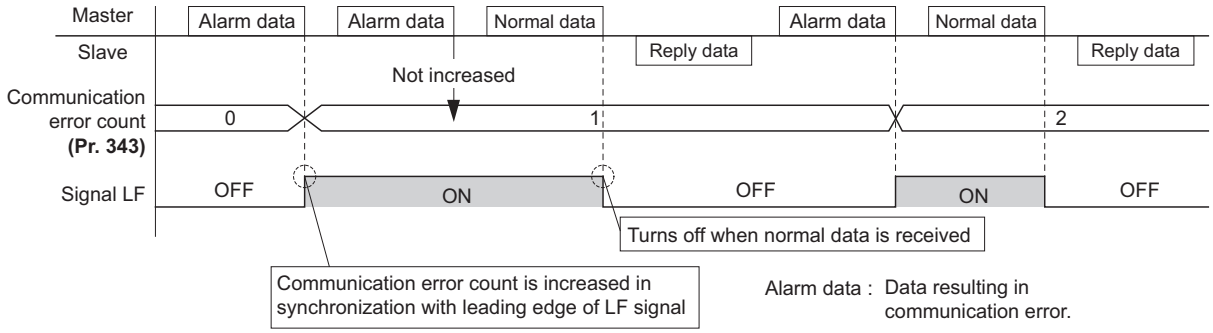

NOTE

- The LF signal can be assigned to an output terminal by setting **Pr.190 to Pr.196**. Changing the terminal assignment may affect other functions. Set parameters after confirming the function of each terminal.

◆ Signal loss detection (Pr.539 RS-485 communication check time interval)

- If a signal loss (communication) is detected between the inverter and the master as a result of a signal loss detection, the Communication fault (inverter) (E.SER) occurs and the inverter output is shut off.
- When the setting is "9999", communication check (signal loss detection) is not made.
- When the setting is "0", reading, etc. of monitors and parameters is possible, though E.SER occurs instantly when the operation mode is switched to the Network operation.
- A signal loss detection is made when the setting is any of "0.1 s to 999.8 s". In order to enable the signal loss detection, data must be sent by the master at an interval equal to or less than the time set for the communication check. (The inverter makes a communication check (clearing of communication check counter) regardless of the station number setting of the data sent from the master).
- The communication check is made from the first communication in the Network operation mode (can be changed by **Pr.551 PU mode operation command source selection**).

上正科技有限公司
購買、維修、此手冊零組件
電話： 037-466833
Email: service@repairtw.com
Line Id: @2222
www.repairtw.com

- The communication check time by query communication includes a no-data time (3.5 bytes).
  This no-data time differs according to the communication speed, so take this no-data time into consideration when setting the communication check time.

Example: RS-485 terminal communication, **Pr. 539** = "0.1 to 999.8 s"

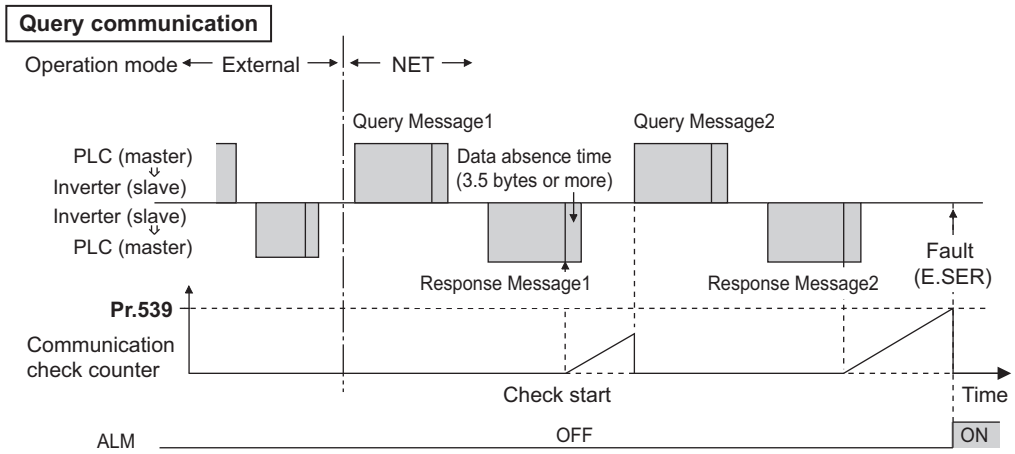

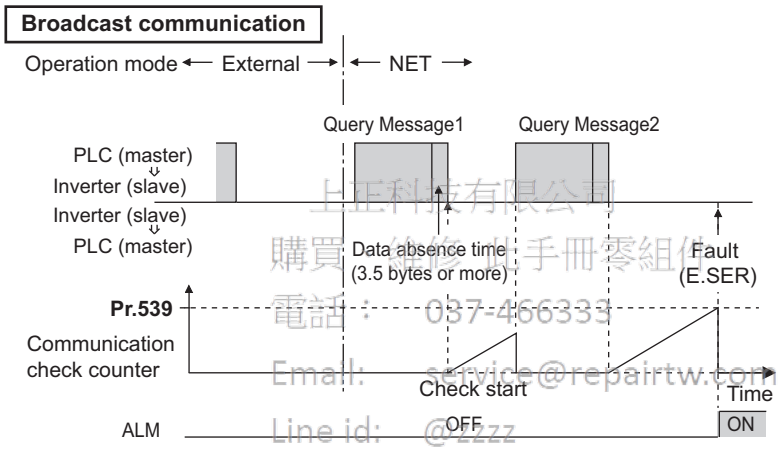

上正科技有限公司
購買、維修、此手冊零組件
電話： 037-466333
Email: service@repairtw.com
Line id: @zzzz
www.repairtw.com

NOTE

- For the RS-485 terminal communication, the operation at a communication error occurrence depends on the **Pr.502 Stop mode selection at communication error** setting. (Refer to page 478.)

5.12.7 BACnet MS/TP protocol

Using BACnet MS/TP protocol, communication operation and parameter setting are available from the RS-485 terminals of the inverter.

Pr.	Name	Initial value		Setting range	Description
		FM	CA		
52 **M100**	**Operation panel main monitor selection**	0		0, 5 to 14, 17, 18, 20, 23 to 25, 34, 38, 40 to 45, 50 to 57, 61, 62, 64, 67 to 69, 81 to 96, 98, 100	81: BACnet reception status 82: BACnet token pass counter (Displays the count of received token) 83: BACnet valid APDU counter (Displays the count of valid APDU detection) 84: BACnet communication error counter (Displays the count of communication error) 85: Terminal FM/CA output level (Same display as Analog Output 0) 86: Terminal AM output level (Same display as Analog Output 1) The count of the setting values "82" and "83" returns to "0" if the count exceeds "9999". The upper limit of the count of the setting value "84" is "9999".
774 **M101**	**Operation panel monitor selection 1**	9999		1 to 3, 5 to 14, 17, 18, 20, 23 to 25, 34, 38, 40 to 45, 50 to 57, 61, 62, 64, 67 to 69, 81 to 96, 98, 100	
775 **M102**	**Operation panel monitor selection 2**				
776 **M103**	**Operation panel monitor selection 3**				
331 **N030**	**RS-485 communication station number**	0		0 to 127[*1]	Set the inverter station number (node).
332 **N031**	**RS-485 communication speed**	96		96, 192, 384, 576, 768, 1152[*1*2]	Select the communication speed. The setting value × 100 equals the communication speed. For example, enter 96 to set the communication speed of 9600 bps.
390 **N054**	**% setting reference frequency**	60 Hz	50 Hz	1 to 590 Hz	Set a reference frequency of the set frequency.
549 **N000**	**Protocol selection**	0		0	Mitsubishi inverter protocol (computer link)
				1	MODBUS RTU protocol
				2	BACnet MS/TP protocol
726 **N050**	**Auto Baudrate/Max Master**	255		0 to 255	Auto baud rate (bit 7) 0: inactive, 1: active
					Max Master (bit 0 to bit 6) setting range: 0 to 127 Maximum address for master node
727 **N051**	**Max Info Frames**	1		1 to 255	Set the maximum number of frames that the inverter can transmit while it owns the token.
728 **N052**	**Device instance number (Upper 3 digits)**	0		0 to 419 (0 to 418)	Device identifier When the figure obtained by combining the **Pr.728** and **Pr.729** settings is not within "0 to 4194302", the setting is out of range. When **Pr.728** = "419", the setting range of **Pr.729** is "0 to 4302". When **Pr.729** = "4303" or more, the setting range of **Pr.728** is "0 to 418".
729 **N053**	**Device instance number (Lower 4 digits)**	0		0 to 9999 (0 to 4302)	

*1 When a value outside the setting range is set, the inverter operates at the initial value.
*2 When the Auto baudrate is used, the communication speed is changed to the detected communication speed.

上正科技有限公司
購買、維修 此手冊零組件
電話： 037-466333
Email: service@repairtw.com
Line id: @zzzz
www.repairtw.com

◆ Communication specifications

- The specifications conform to the BACnet standard of physical medium EIA-485.

Item		Description
Physical medium		EIA-485 (RS-485)
	Connection port	RS-485 terminals (PU connector is not available.)
	Data transfer method	NRZ encoding
	Baud rate	9600 bps, 19200 bps, 38400 bps, 57600 bps, 76800 bps, 115200 bps
	Start bit	Fixed to 1 bit
	Data length	Fixed to 8 bits
	Parity bit	Fixed to none
	Stop bit	Fixed to 1 bit
Network topology		Bus topology
Communication method		Token passing (token bus)
		Master-slave (Only the master is available for this product.)
Communication protocol		MS/TP (master-slave/token passing LAN)
Maximum connection		255 (up to 32 for one segment, addition with a repeater available)
Node number		0 to 127
	Master	0 to 127 (This product is the master.)
Supported property of BACnet standard object type		Refer to page 514.
Supported BIBBs (Annex K)		Refer to page 521.
BACnet standardized device profile (Annex L)		Refer to page 521.
Segmentation		Not supported
Device address binding		Not supported

NOTE

- This product is classified as a BACnet Application Specific Controller (B-ASC).
- This product is designed for multiple master network, therefore 2-wire type connection is supported.

上耀科技有限公司
購買、維修 此手冊零組件
電話: 037-466333
Email: service@repairtw.com
Line id: @220
www.repairtw.com

◆ Node with network bias resistors

- This product is a node with local bias resistors. Therefore at least one node must be a node with network bias resistors in the network configuration.
- When configuring the network with only this products, refer to the following, and make the node with network bias resistors. (When using two sets in one segment, insert them into both ends of the network.)

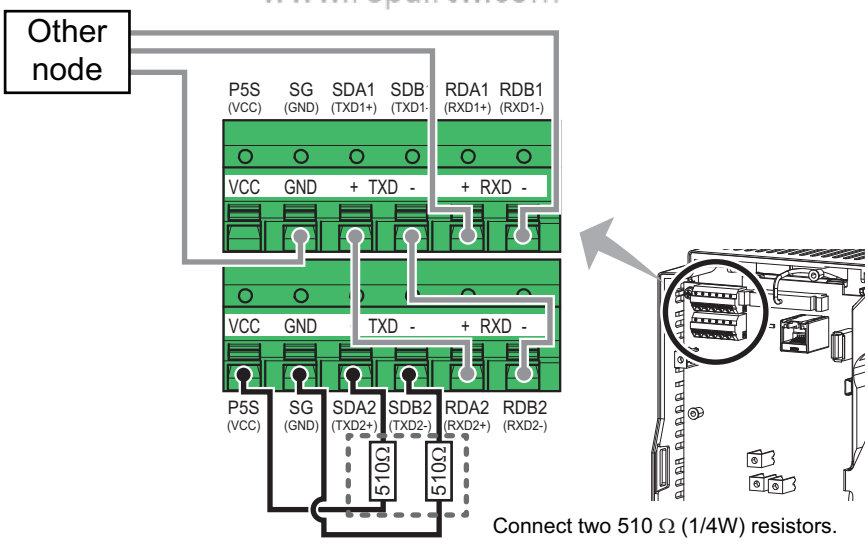

◆ BACnet reception status monitor (Pr.52)

- Set **Pr.52** = "81" to monitor the BACnet communication status on the operation panel.

Monitor value	Status	Description	LF signal output
0	Idle	Never had BACnet communication.	OFF
1	Automatic baud rate recognition	Automatic baud rate recognition. (Communication error during automatic baud rate recognition is not counted.)	OFF
2	Not joined the network	Waiting for a token to own node.	OFF
10	Data to own node	Received a token to own node.	OFF
11		Received a supported request to own node (including broadcasting).	OFF
12		Received an unsupported request to own node (including broadcasting).	OFF
20	Data to other node	Received a token to other nodes.	OFF
30	Node separated	Separated from token passing after joined in it.	OFF
90	Fault data	Detected a communication error.	ON
91		Protocol error (LPDU, NPDU, APDU are not following the format regulations.)	ON

5

◆ % setting reference frequency (Pr.390)

- Set a reference frequency of the set frequency. The setting value of **Pr.390 % setting reference frequency** is 100% reference. The reference to the frequency command is converted to the set frequency in the following formula.
  Set frequency = **% setting reference frequency** × Speed scale (Refer to page 516.)

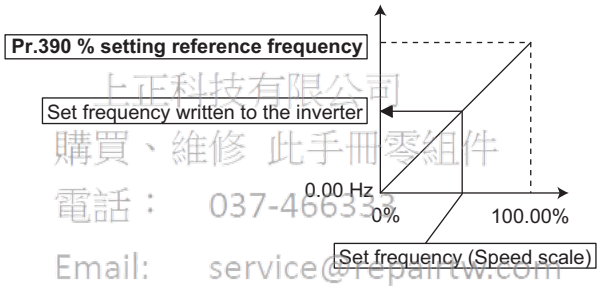

上正科技有限公司
購買、維修 此手冊零組件
電話： 037-466333
Email: service@repairtw.com
Line id: @zzzz
www.repairtw.com

NOTE

- The % setting reference frequency cannot be set at less than the minimum frequency resolution of the inverter.
- The set frequency is written to RAM.
- The set frequency is applied at the writing of Speed scale. (The set frequency is not applied at the setting of **Pr.390**.)

◆ Automatic baud rate recognition (Pr.726 Auto Baudrate/Max Master)

- Automatic changing of baud rate is available with **Pr.726** setting. When **Pr.726** = "128 to 255", turn the power ON from OFF or reset the inverter to start automatic baud rate recognition.

Pr.726 setting	Operation
0 to 127	Automatic baud rate recognition is enabled. (The **Pr.332** setting is used as the baud rate.)
128 to 255	The inverter monitors the data on the communication bus, and automatically switches the baud rate. The recognized baud rate is written to **Pr.332**.

NOTE

- After the baud rate recognition, the recognized baud rate is written in EEPROM as the **Pr.332** setting regardless of the **Pr.342 Communication EEPROM write selection** setting.
- The BACnet status monitor displays "1" during automatic baud rate recognition.
- The communication error monitor count is not performed during automatic baud rate recognition.
- During automatic baud rate recognition, the inverter does not transmit data, but only accepts data.
- The baud rate switching operation cannot be finished if the inverter is not connected to the communication bus. (BACnet protocol will not be established.)
- The baud rate switching operation cannot be finished if the inverter is continuously receiving abnormal data during automatic baud rate switching. (BACnet protocol will not be established.)

◆ Supported property of BACnet standard object type

R: Read only, W: Read/Write (Commandable values not supported), C: Read/Write (Commandable values supported)

Property	Object support condition						
	Analog input	Analog Output	Analog Value	Binary Input	Binary Output	Binary Value	Device
APDU Timeout							R
Application Software Version							R
Database Revision							R
Device Address Binding							R
Event State	R	R	R	R	R	R	
Firmware Revision							R
Max APDU Length Accepted							R
Max Info Frames							W
Max Master							W
Model Name							R
Number of APDU Retries							R
Object Identifier	R	R	R	R	R	R	R
Object List							R
Object Name	R	R	R	R	R	R	R
Object Type	R	R	R	R	R	R	R
Out Of Service	R	R	R	R	R	R	
Polarity				R	R		
Present Value	R	C	C*1	R	C	C*1	
Priority Array		R	R*2		R	R*2	
Protocol Object Types Supported							R
Protocol Revision							R
Protocol Services Supported							R
Protocol Version							R
Relinquish Default		R	R*2		R	R*2	
Segmentation Supported							R
Status Flags	R	R	R	R	R	R	
System Status							R
Unit	R	R	R				
Vendor Identifier							R
Vendor Name							R

上正科技有限公司
購買、維修 此手冊零組件
電話： 037-466333
Email: service@repairtw.com
Line id: @zzzz
www.repairtw.com

*1 This property is commandable for some instances of this object. Otherwise it is read/write.
*2 This property is supported only for instances of this object where the Present Value property is commandable.

◆ Supported BACnet object

- ANALOG INPUT

Object Identifier	Object Name	Present Value Access Type*1	Description	Unit
0	Terminal 1	R	Represents actual input voltage of terminal 1. (The range varies depending on the **Pr.73** and **Pr.267** settings. -10 to +10 V (-100% to +100%), -5 to +5 V (-100% to +100%))	percent (98)
1	Terminal 2	R	Represents actual input voltage (or input current) of terminal 2. (The range varies depending on the **Pr.73** and **Pr.267** settings. 0 to 10 V (0% to 100%), 0 to 5 V (0% to 100%), 0 to 20 mA (0% to100%))	percent (98)
2	Terminal 4	R	Represents actual input current (or input voltage) of terminal 4. (The range varies depending on the **Pr.73** and **Pr.267** settings. 2 to 10 V (0% to 100%), 1 to 5 V (0% to 100%), 4 to 20 mA (0% to 100%))	percent (98)

*1 R: Read only, W: Read/Write (Commandable values not supported), C: Read/Write (Commandable values supported)

- ANALOG OUTPUT

Object Identifier	Object Name	Present Value Access Type*1	Description	Unit
0	Terminal FM (CA)	C	Controls actual output current level of terminal FM/CA. Control is available when **Pr.54 FM/CA terminal function selection** = "85"*2. (Setting range: 0 to 200%)	percent (98)
1	Terminal AM	C	Controls actual output voltage level of terminal AM. Control is available when **Pr.158 AM terminal function selection** = "86"*2. (Setting range: -200 to 200%)	percent (98)

*1 R: Read only, W: Read/Write (Commandable values not supported), C: Read/Write (Commandable values supported)
Values written to the objects that support the commandable values are stored in the Priority Array, even when "Write Access Denied" is returned due to inconsistency of the writing requirements such as the operating mode, on condition that the values are written within the setting range.

*2 Available regardless of the operation mode, operation command source, and speed command source.

- ANALOG VALUE

Object Identifier	Object Name	Present Value Access Type*1	Description	Unit
1	Output frequency	R	Represents the output frequency value.	hertz (27)
2	Output current	R	Represents the output current value.	amperes (3)
3	Output voltage	R	Represents the output voltage value.	volts (5)
6	Running speed	R	Represents the running speed value.	revolution-per-minute (104)
8	Converter output voltage	R	Represents the converter output voltage value.	volts (5)
14	Output power	R	Represents the output power value.	kilowatts (48)
17	Load meter	R	Represents the load meter value.	percent (98)
20	Cumulative energization time	R	Represents the cumulative energization time value.	hours (71)
23	Actual operation time	R	Represents the actual operation time value.	hours (71)
25	Cumulative power	R	Represents the cumulative power value.	kilowatt-hours (19)
52	PID set point	R	Represents the PID set point.	no-units (95)
54	PID deviation	R	Represents the PID deviation. (Minus display is available with reference to 0%, in 0.1% increment.)	no-units (95)
67	PID measured value2	R	Represents the PID measurement 2.	no-units (95)
92	Second PID set point	R	Represents the second PID set point.	no-units (95)
94	Second PID deviation	R	Represents the second PID deviation. (Minus display is available with reference to 0%, in 0.1% increment.)	no-units (95)
95	Second PID measured value 2	R	Represents the second PID measurement 2.	no-units (95)
200	Alarm history 1	R	Represents the last fault record (fault record 1).	no-units (95)
201	Alarm history 2	R	Represents the second most recent fault record (fault record 2).	no-units (95)
202	Alarm history 3	R	Represents the third most recent fault record (fault record 3).	no-units (95)
203	Alarm history 4	R	Represents the fourth most recent fault record (fault record 4).	no-units (95)

上正科技有限公司
購買、維修 此手冊零組件
電話： 037-466333
Email: service@repairtw.com
Line id: @zzzz
www.repairtw.com

Object Identifier	Object Name	Present Value Access Type*1	Description	Unit
300	Speed scale*2	C	Controls the ratio of the frequency command. (Setting range: 0.00 to 100.00) (Refer to page 513.)	percent (98)
310	PID set point CMD*2	C	Set the PID action set point. This object is the set point during PID operation if **Pr.128** = "60 or 61". (Setting range: 0.00 to 100.00)*3	no-units (95)
311	PID measured value CMD*2	C	Set the PID measured value. This object is the measured value during PID operation if **Pr.128** = "60 or 61". (Setting range: 0.00 to 100.00)*3	no-units (95)
312	PID deviation CMD*2	C	Set the PID deviation. (0.01 increments) This object is the deviation during PID operation if **Pr.128** = "50 or 51". (Setting range: -100.00 to 100.00)	percent (98)
320	Second PID set point CMD	C	Set the second PID action set point. This object is the set point during PID operation if **Pr.753** = "60 or 61". (Setting range: 0.00 to 100.00)*3	no-units (95)
321	Second PID measured value CMD	C	Set the second PID measured value. This object is the measured value during PID operation if **Pr.753** = "60 or 61". (Setting range: 0.00 to 100.00)*3	no-units (95)
322	Second PID deviation CMD	C	Set the second PID deviation. (0.01 increments) This object is the deviation during PID operation if **Pr.753** = "50 or 51". (Setting range: -100.00 to 100.00)	percent (98)
398	Mailbox parameter	W	Access to the properties which are not defined as objects are available. (Refer to page 518.)	no-units (95)
399	Mailbox value	W		no-units (95)
10007	Acceleration time	W	Set **Pr.7 Acceleration time**.	seconds (73)
10008	Deceleration time	W	Set **Pr.8 Deceleration time**.	seconds (73)

*1 R: Read only, W: Read/Write (Commandable values not supported), C: Read/Write (Commandable values supported)
Values written to the objects that support the commandable values are stored in the Priority Array, even when "Write Access Denied" is returned due to inconsistency of the writing requirements such as the operating mode, on condition that the values are written within the setting range.

*2 If communication speed command source is other than NET, the setting value can be written, but not to be applied.

*3 When both **C42 (Pr.1136) and C44 (Pr.1138)** ≠ "9999", the setting range is from the smaller coefficient to the larger coefficient of **C42 (Pr.1136) and C44 (Pr.1138)**. Depending on the setting, the writing value and the reading value may not be the same at the minimum digit.

上正科技有限公司
購買、維修、此手冊零組件
電話：037-466333
Email: service@repairtw.com
Line id: @222
www.repairtw.com

- BINARY INPUT

Object Identifier	Object Name	Present Value Access Type*1	Description (0: Inactive, 1: Active)
0	Terminal STF	R	Represents actual input of terminal STF.
1	Terminal STR	R	Represents actual input of terminal STR.
2	Terminal AU	R	Represents actual input of terminal AU.
3	Terminal RT	R	Represents actual input of terminal RT.
4	Terminal RL	R	Represents actual input of terminal RL.
5	Terminal RM	R	Represents actual input of terminal RM.
6	Terminal RH	R	Represents actual input of terminal RH.
7	Terminal JOG	R	Represents actual input of terminal JOG.
8	Terminal MRS	R	Represents actual input of terminal MRS.
9	Terminal STOP	R	Represents actual input of terminal STOP.
10	Terminal RES	R	Represents actual input of terminal RES.
11	Terminal CS	R	Represents actual input of terminal CS.
100	Terminal RUN	R	Represents actual output of terminal RUN.
101	Terminal SU	R	Represents actual output of terminal SU.
102	Terminal IPF	R	Represents actual output of terminal IPF.
103	Terminal OL	R	Represents actual output of terminal OL.
104	Terminal FU	R	Represents actual output of terminal FU.
105	Terminal ABC1	R	Represents actual output of terminal ABC1.
106	Terminal ABC2	R	Represents actual output of terminal ABC2.
107	Terminal So (SO)	R	Represents actual output of terminal So (SO).

*1 R: Read only, W: Read/Write (Commandable values not supported), C: Read/Write (Commandable values supported)

- BINARY OUTPUT

Object Identifier	Object Name	Present Value Access Type*1	Description (0: Inactive, 1: Active)
0	Terminal RUN CMD	C	Represents actual output of terminal RUN. Available when **Pr.190 RUN terminal function selection** = "82 or 182".*2
1	Terminal SU CMD	C	Controls actual output of terminal SU. Available when **Pr.191 SU terminal function selection** = "82 or 182".*2
2	Terminal IPF CMD	C	Controls actual output of terminal IPF. Available when **Pr.192 IPF terminal function selection** = "82 or 182".*2
3	Terminal OL CMD	C	Controls actual output of terminal OL. Available when **Pr.193 OL terminal function selection** = "82 or 182".*2
4	Terminal FU CMD	C	Controls actual output of terminal FU. Available when **Pr.194 FU terminal function selection** = "82 or 182".*2
5	Terminal ABC1 CMD	C	Controls actual output of terminal ABC1. Available when **Pr.195 ABC1 terminal function selection** = "82 or 182".*2
6	Terminal ABC2 CMD	C	Controls actual output of terminal ABC2. Available when **Pr.196 ABC2 terminal function selection** = "82 or 182".*2

*1 R: Read only, W: Read/Write (Commandable values not supported), C: Read/Write (Commandable values supported)
Values written to the objects that support the commandable values are stored in the Priority Array, even when "Write Access Denied" is returned due to inconsistency of the writing requirements such as the operating mode, on condition that the values are written within the setting range.

*2 Available regardless of the operation mode, operation command source, and speed command source.

上正科技有限公司
購買、維修 此手冊零組件
電話： 037-466333
Email: service@repairtw.com
Line id: @zzzz
www.repairtw.com

- BINARY VALUE

Object Identifier	Object Name	Present Value Access Type*1	Description
0	Inverter running	R	Represents the Inverter running (RUN) signal status.
11	Inverter operation ready	R	Represents the Inverter operation ready (RY) signal status.
98	Alarm output	R	Represents the Alarm (LF) signal status.
99	Fault output	R	Represents the Fault (ALM) signal status.
200	Inverter running reverse	R	Represents inverter reverse running status.
300	Control input instruction AU	C	Controls the function assigned to terminal AU. Setting 1 in this object turns ON the signal assigned to **Pr.184 AU terminal function selection**.
301	Control input instruction RT	C	Controls the function assigned to terminal RT. Setting 1 in this object turns ON the signal assigned to **Pr.183 RT terminal function selection**.
302	Control input instruction RL	C	Controls the function assigned to terminal RL. Setting 1 in this object turns ON the signal assigned to **Pr.180 RL terminal function selection**.
303	Control input instruction RM	C	Controls the function assigned to terminal RM. Setting 1 in this object turns ON the signal assigned to **Pr.181 RM terminal function selection**.
304	Control input instruction RH	C	Controls the function assigned to terminal RH. Setting 1 in this object turns ON the signal assigned to **Pr.182 RH terminal function selection**.
305	Control input instruction JOG*2	C	Controls the function assigned to terminal JOG. Setting 1 in this object turns ON the signal assigned to **Pr.185 JOG terminal function selection**.
306	Control input instruction MRS	C	Controls the function assigned to terminal MRS. Setting 1 in this object turns ON the signal assigned to **Pr.187 MRS terminal function selection**.
307	Control input instruction STOP*2	C	Controls the function assigned to terminal STOP. Setting 1 in this object turns ON the signal assigned to **Pr.188 STOP terminal function selection**.
308	Control input instruction RES*2	C	Controls the function assigned to terminal RES. Setting 1 in this object turns ON the signal assigned to **Pr.189 RES terminal function selection**.
309	Control input instruction CS*2	C	Controls the function assigned to terminal CS. Setting 1 in this object turns ON the signal assigned to **Pr.186 CS terminal function selection**.
400	Run/Stop	C	Controls the start/stop command. The start command is written after the Speed scale is applied. *3 1: Start 0: Stop
401	Forward/Reverse	C	Controls the forward/reverse rotation.*3 1: Reverse rotation 0: Forward rotation
402	Fault reset	C	Clears fault output status. (Release of an inverter fault without inverter reset is available.)

上正科技有限公司
購買、維修 此手冊零組件
電話： 03-4368393
Email: service@repairtw.com
Line id: @2222
www.repairtw.com

*1 R: Read only, W: Read/Write (Commandable values not supported), C: Read/Write (Commandable values supported)
Values written to the objects that support the commandable values are stored in the Priority Array, even when "Write Access Denied" is returned due to inconsistency of the writing requirements such as the operating mode, on condition that the values are written within the setting range.

*2 The following signals cannot be controlled by the network: JOG operation, selection of automatic restart after instantaneous power failure, start self-holding, and reset. Therefore control input instruction JOG, STOP, RES, and CS are invalid in the initial status. To use the control input instruction JOG, STOP, RES, and CS, change the signals with **Pr.185, Pr.186, Pr.188,** and **Pr.189 (Input terminal function selection)**. (Refer to page 355.) (Reset is available with ReinitializeDevice.)

*3 If communication operation command source is other than NET, the setting value can be written, but not to be applied.

◆ Mailbox parameter / Mailbox value (BACnet registers)

- Access to the properties which are not defined as objects are available by using "Mailbox parameter" and "Mailbox value".
- To read a property, write the register of the intended property to "Mailbox parameter", and then read "Mailbox value". To write a property, write the register of the intended property to "Mailbox parameter", and then write a value to "Mailbox value".

- System environment variables

Register	Definition	Read/write	Remarks
40010	Operation mode / inverter setting	Read/write	The data is written as an operation mode setting for writing. The data is read as the operation mode status for reading.

[Operation mode / inverter setting]

Mode	Read value	Write value
EXT	H0000	H0010*1
PU	H0001	H0011*1
EXT JOG	H0002	—
PU JOG	H0003	—
NET	H0004	H0014
PU + EXT	H0005	—

*1 Writing is available depending on the **Pr.79** and **Pr.340** settings. For the details, refer to page 237.
Restrictions in each operation mode conform with the computer link specification.

- Real time monitor

  The register numbers and the monitor items are the same as those of the MODBUS RTU real time monitor. Refer to the MODBUS RTU real time monitor on page 288.

- Parameter

Pr.	Register	Name	Read/write	Remarks
0 to 999	41000 to 41999	For details on parameter names, refer to the parameter list (page 132).	Read/write	The parameter number + +41000 is the register number.
C2 (902)	41902	Terminal 2 frequency setting bias (frequency)	Read/write	
C3 (902)	42092	Terminal 2 frequency setting bias (analog value)	Read/write	Analog value (%) set in **C3 (902)**
	43902	Terminal 2 frequency setting bias (terminal analog value)	Read	Analog value (%) of the voltage (current) applied to terminal 2
125 (903)	41903	Terminal 2 frequency setting gain (frequency)	Read/write	
C4 (903)	42093	Terminal 2 frequency setting gain (analog value)	Read/write	Analog value (%) set in **C4 (903)**
	43903	Terminal 2 frequency setting gain (terminal analog value)	Read	Analog value (%) of the voltage (current) applied to terminal 2
C5 (904)	41904	Terminal 4 frequency setting bias (frequency)	Read/write	
C6 (904)	42094	Terminal 4 frequency setting bias (analog value)	Read/write	Analog value (%) set in **C6 (904)**
	43904	Terminal 4 frequency setting bias (terminal analog value)	Read	Analog value (%) of the current (voltage) applied to terminal 4
126 (905)	41905	Terminal 4 frequency setting gain (frequency)	Read/write	
C7 (905)	42095	Terminal 4 frequency setting gain (analog value)	Read/write	Analog value (%) set in **C7 (905)**
	43905	Terminal 4 frequency setting gain (terminal analog value)	Read	Analog value (%) of the current (voltage) applied to terminal 4
C12 (917)	41917	Terminal 1 bias frequency (speed)	Read/write	
C13 (917)	42107	Terminal 1 bias (speed)	Read/write	Analog value (%) set in **C13 (917)**
	43917	Terminal 1 bias (speed) (terminal analog value)	Read	Analog value (%) of voltage applied to terminal 1
C14 (918)	41918	Terminal 1 gain frequency (speed)	Read/write	
C15 (918)	42108	Terminal 1 gain (speed)	Read/write	Analog value (%) set in **C15 (918)**
	43918	Terminal 1 gain (speed) (terminal analog value)	Read	Analog value (%) of voltage applied to terminal 1
C16 (919)	41919	Terminal 1 bias command (torque)	Read/write	
C17 (919)	42109	Terminal 1 bias (torque)	Read/write	Analog value (%) set in **C17 (919)**
	43919	Terminal 1 bias (torque) (terminal analog value)	Read	Analog value (%) of voltage applied to terminal 1

上正科技有限公司
購買、維修 此手冊零組件
電話： 037-466333
Email： service@repairtw.com
Line id： @7777
www.repairtw.com

Pr.	Register	Name	Read/write	Remarks
C18 (920)	41920	Terminal 1 gain command (torque)	Read/write	
C19 (920)	42110	Terminal 1 gain (torque)	Read/write	Analog value (%) set in **C19 (920)**
	43920	Terminal 1 gain (torque) (terminal analog value)	Read	Analog value (%) of voltage applied to terminal 1
C8 (930)	41930	Current output bias signal	Read/write	
C9 (930)	42120	Current output bias current	Read/write	Analog value (%) set in **C9 (930)**
C10 (931)	41931	Current output gain signal	Read/write	
C11 (931)	42121	Current output gain current	Read/write	Analog value (%) set in **C11 (931)**
C38 (932)	41932	Terminal 4 bias command (torque)	Read/write	
C39 (932)	42122	Terminal 4 bias (torque)	Read/write	Analog value (%) set in **C39 (932)**
	43932	Terminal 4 bias (torque) (terminal analog value)	Read	Analog value (%) of the current (voltage) applied to terminal 4
C40 (933)	41933	Terminal 4 gain command (torque)	Read/write	
C41 (933)	42123	Terminal 4 gain (torque)	Read/write	Analog value (%) set in **C41 (933)**
	43933	Terminal 4 gain (torque) (terminal analog value)	Read	Analog value (%) of the current (voltage) applied to terminal 4
C42 (934)	41934	PID display bias coefficient	Read/write	
C43 (934)	42124	PID display bias analog value	Read/write	Analog value (%) set in **C43 (934)**
	43934	PID display bias analog value (terminal analog value)	Read	Analog value (%) of the current (voltage) applied to terminal 4
C44 (935)	41935	PID display gain coefficient	Read/write	
C45 (935)	42125	PID display gain analog value	Read/write	Analog value (%) set in **C45 (935)**
	43935	PID display gain analog value (terminal analog value)	Read	Analog value (%) of the current (voltage) applied to terminal 4
1000 to 1999	45000 to 45999	For details on parameter names, refer to the parameter list (page 132).	Read/write	The parameter number + 44000 is the register number.

上正科技有限公司
購買、維修 此手冊零組件
電話： 037-466333
Email: service@repairtw.com
Line id: @zzzz
www.repairtw.com

- Fault history

Register	Definition	Read/write	Remarks
40501	Fault record 1	Read/write	Being 2 bytes in length, the data is stored as H00○○. Refer to the lowest 1 byte for the error code. (For details on error codes, refer to page 566.) The fault history is cleared by writing to register 40501. Set any value as data.
40502	Fault record 2	Read	
40503	Fault record 3	Read	
40504	Fault record 4	Read	
40505	Fault record 5	Read	
40506	Fault record 6	Read	
40507	Fault record 7	Read	
40508	Fault record 8	Read	

- Product profile

Register	Definition	Read/write	Remarks
44001	Model (1st and 2nd characters)	Read	The model name can be read in ASCII code. "H20" (blank code) is set for blank area. Example) FR-F840-1 (FM type): H46, H52, H2D, H46, H38, H34, H30, H2D, H31, H20 ... H20
44002	Model (3rd and 4th characters)	Read	
44003	Model (5th and 6th characters)	Read	
44004	Model (7th and 8th characters)	Read	
44005	Model (9th and 10th characters)	Read	
44006	Model (11th and 12th characters)	Read	
44007	Model (13th and 14th characters)	Read	
44008	Model (15th and 16th characters)	Read	
44009	Model (17th and 18th characters)	Read	
44010	Model (19th and 20th characters)	Read	
44011	Capacity (1st and 2nd characters)	Read	The inverter rated capacity can be read in ASCII code. Data read is displayed in increments of 0.1 kW (rounded down to one decimal place). "H20" (blank code) is set for blank area. Example) 0.75K: " 7" (H20, H20, H20, H20, H20, H37)
44012	Capacity (3rd and 4th characters)	Read	
44013	Capacity (5th and 6th characters)	Read	

NOTE

- When a 32-bit parameter setting or monitor item is read and the value to be read exceeds HFFFF, HFFFF is returned.

◆ ANNEX A - PROTOCOL IMPLEMENTATION CONFORMANCE STATEMENT (NORMATIVE)

(This annex is part of this Standard and is required for its use.)

BACnet Protocol Implementation Conformance Statement

Date: 1st Jul 2014

Vendor Name: Mitsubishi Electric Corporation

Product Name: Inverter

Product Model Number: FR-F820-1, FR-F820-2, FR-F840-1, FR-F840-2, FR-F842-1, FR-F842-2

Application Software Version: 8463*

Firmware Revision: 1.00

BACnet Protocol Revision: 4

5

Product Description:

BACnet Standardized Device Profile (Annex L):

☐ BACnet Operator Workstation (B-OWS)

☐ BACnet Building Controller (B-BC)

☐ BACnet Advanced Application Controller (B-AAC)

☒ BACnet Application Specific Controller (B-ASC)

☐ BACnet Smart Sensor (B-SS)

☐ BACnet Smart Actuator (B-SA)

上正科技有限公司
購買、維修 此手冊零組件
電話： 037-466333
Email: service@repairtw.com
Line id: @zzzz
www.repairtw.com

List all BACnet Interoperability Building Blocks Supported (Annex K):

DS-RP-B, DS-WP-B, DM-DDB-B, DM-DOB-B, DM-DCC-B , DM-RD-B

Segmentation Capability:

☐ Segmented requests supported Window Size _____

☐ Segmented responses supported Window Size _____

Standard Object Types Supported:

An object type is supported if it may be present in the device. For each standard Object Type supported provide the following data:

1. Whether objects of this type are dynamically creatable using the CreateObject service
2. Whether objects of this type are dynamically deletable using the DeleteObject service
3. List of the optional properties supported
4. List of all properties that are writable where not otherwise required by this standard
5. List of all properties that are conditionally writable where not otherwise required by this standard
6. List of proprietary properties and for each its property identifier, datatype, and meaning
7. List of any property range restrictions

Dynamic object creation and deletion is not supported.

To check the object types supported by the FR-F800 series, refer to page 514.

Data Link Layer Options:

☐ BACnet IP, (Annex J)
☐BACnet IP, (Annex J), Foreign Device
☐ ISO 8802-3, Ethernet (Clause 7)
☐ ANSI/ATA 878.1, 2.5 Mb. ARCNET (Clause 8)
☐ ANSI/ATA 878.1, RS-485 ARCNET (Clause 8), baud rate(s) _____
☒MS/TP master (Clause 9), baud rate(s): 9600, 19200, 38400, 76800
☐ MS/TP slave (Clause 9), baud rate(s): _____
☐Point-To-Point, EIA 232 (Clause 10), baud rate(s): _____
☐Point-To-Point, modem, (Clause 10), baud rate(s): _____
☐LonTalk, (Clause 11), medium: _____
☐Other: _____

Device Address Binding:

Is static device binding supported? (This is currently necessary for two-way communication with MS/TP slaves and certain other devices.) ☐Yes ☒No

Networking Options:

☐ Router, Clause 6 - List all routing configurations, e.g., ARCNET-Ethernet, Ethernet-MS/TP, etc.
☐ Annex H, BACnet Tunneling Router over IP
☐ BACnet/IP Broadcast Management Device (BBMD)
Does the BBMD support registrations by Foreign Devices? ☐Yes☐ No

上正科技有限公司
購買 維修 此手冊零組件
電話： 037-466333
Email: service@repairtw.com
Line id: @zzzz
www.repairtw.com

Character Sets Supported:

Indicating support for multiple character sets does not imply that they can all be supported simultaneously.

☒ ANSI X3.4 ☐ IBM™/Microsoft™ DBCS ☐ISO 8859-1
☐ISO 10646 (UCS-2) ☐ISO 10646 (UCS-4) ☐JIS C 6226

If this product is a communication gateway, describe the types of non-BACnet equipment/networks(s) that the gateway supports:

_____
_____
_____

5.12.8 USB device communication

A personal computer and an inverter can be connected with a USB cable. Setup of the inverter can be easily performed with FR Configurator2.

The inverter can be connected easily to a personal computer by a USB cable.

Pr.	Name	Initial value	Setting range	Description
547[*1] **N040**	**USB communication station number**	0	0 to 31	Specify the inverter station number.
548[*1] **N041**	**USB communication check time interval**	9999	0	USB communication is possible, however the inverter output is shut off (E.USB) when the mode changes to the PU operation mode.
			0.1 to 999.8 s	Set the communication check time interval. If a no-communication state persists for longer than the permissible time, the inverter output is shut off (E.USB).
			9999	No communication check

*1 The changed value is applied after the next power-ON or inverter reset.

◆ USB communication specifications

Interface	Conforms to USB1.1 (USB2.0 full speed)
Transmission speed	12 Mbps
Wiring length	Maximum 5 m
Connector	USB mini B connector (receptacle)
Power supply	Self-powered
Recommended USB cable	MR-J3USBCBL3M (cable length 3 m)

上正科技有限公司
購買、維修 此手冊零組件
電話： 037-466333
Email: service@repairtw
Line id: @zzzz
www.repairtw.com

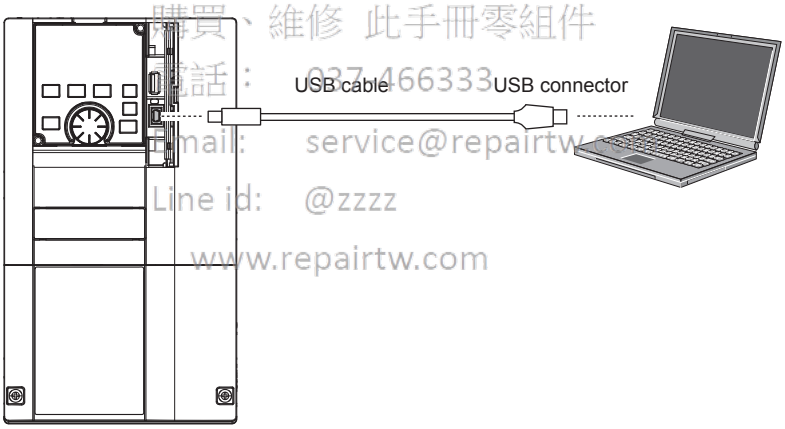

- At the initial setting (**Pr.551 PU mode operation command source selection** = "9999"), communication with FR Configurator2 can be made in the PU operation mode simply by connecting a USB cable. To fix the command source to the USB connector in the PU operation mode, set "3" in **Pr.551**.
- Parameter setting and monitoring can be performed by using FR Configurator2. For details, refer to the Instruction Manual of FR Configurator2.

Parameters referred to

Pr.551 PU mode operation command source selection ☞ page 239

5.12.9 Automatic connection with GOT

When the automatic connection is enabled in the GOT2000 series, the inverter can communicate with the GOT2000 series with only setting the station number and connecting the GOT. This eliminates the need for the communication parameter setting.

Pr.	Name	Initial value	Setting range	Description
117 **N020**	**PU communication station number**	0	0 to 31	Specify the inverter station number. The inverter station number setting is required when multiple inverters are connected to one GOT (PU connector communication).
331 **N030**	**RS-485 communication station number**	0	0 to 31 (0 to 247)*1*2	Specify the inverter station number. The inverter station number setting is required when multiple inverters are connected to one GOT (RS-485 terminal communication).

*1 When **Pr.549 Protocol selection** = "1" (MODBUS RTU protocol), the setting range is as shown in the parentheses.
*2 When a value outside the setting range is set, the inverter operates at the initial value.

◆ Automatic connection system configuration

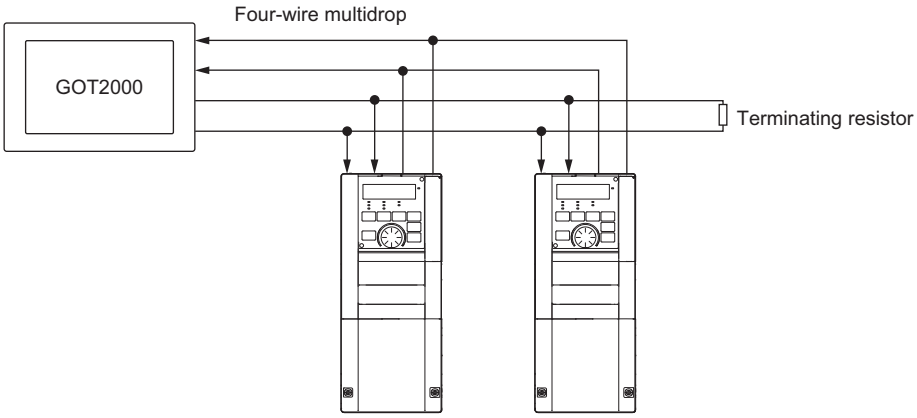

◆ GOT2000 series automatic recognition

- When the GOT2000 series is connected, the parameters required for the GOT connection are automatically changed by setting the automatic recognition on the GOT2000 series side.
- Set the station number (**Pr.117** or **Pr.331**) of the inverter before the automatic recognition is performed.
- Connect all the stations of inverters with GOT before the automatic recognition is performed. The inverter newly added after automatic recognition will not be recognized automatically. (When an inverter is added, perform the initial setting in **Pr.999 Automatic parameter setting** or set the automatic recognition on the GOT side again.)

上立科技有限公司
購買、維修、此手冊零組件
電話： 03-4600333
Email： service@repairtw.com
Line Id： @2222
www.repairtw.com

Automatic change item	Automatic change parameter		Setting value after change
	PU connector connection	RS-485 terminal connection	
Communication speed	**Pr.118**	**Pr.332**	Depending on the setting of the connected device on the GOT side.
Data length / stop bit	**Pr.119**	**Pr.333**	
Parity	**Pr.120**	**Pr.334**	
Time delay setting	**Pr.123**	**Pr.337**	
CR/LF selection	**Pr.124**	**Pr.341**	
Number of communication retries	**Pr.121**	**Pr.335**	9999 (fixed)
Communication check time interval	**Pr.122**	**Pr.336**	9999 (fixed)
Protocol selection	(**Pr.549** holds the value before the automatic recognition.)	**Pr.549**	**0** (fixed to Mitsubishi inverter protocol)

NOTE

- If the automatic recognition cannot be performed, initial setting in **Pr.999** is required.
- For connecting the inverter to the GOT2000 series using the RS-485 terminal block, set **Pr.549 Protocol selection** = "0 (initial value) or 1".
- For connection to a device other than the GOT2000 series, initial setting in **Pr.999** is required.
- For details, refer to the GOT2000 Series Connection Manual (Mitsubishi Product).

Parameters referred to

Pr.999 Automatic parameter setting ☞ page 200

5.12.10 Backup/restore

The GOT can be used for backing up inverter parameters and the data used in the PLC function of inverter.
The backup data stored in the GOT can be used to restore the data in the inverter.

Pr.	Name	Initial value	Setting range	Description
434 N110*1	Network number (CC-Link IE)	0	0 to 255	Enter the network number of the inverter.
435 N111*1	Station number (CC-Link IE)	0	0 to 255	Enter the station number of the inverter.

*1 The setting is available in the inverter on which the FR-A8NCE is installed.

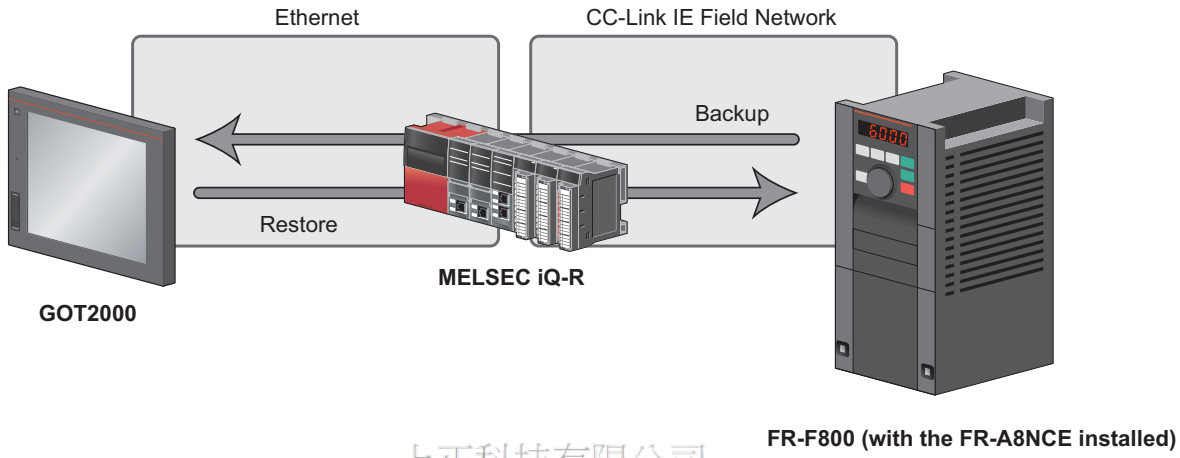

上正科技有限公司
購買、維修 此手冊零組件
電話： 037-466333
Email: service@repairtw.com
Line Id: @2222
www.repairtw.com

◆ Connected devices

- To enable backup/restore, connect the inverter with the FR-A8NCE to a programmable controller (master station) via the CC-Link IE Field Network.

NOTE

- The backup/restore function is enabled only when the inverter is connected to a master station programmable controller.
- For the details of the connected devices, refer to the GOT2000 Series User's Manual (Monitor).

◆ Data to be backed up and restored

- The following data can be backed up and restored. The data other than those listed in the following table cannot be backed up or restored.

Item
Inverter parameters
Parameters used for activating the PLC function
Programs (including SFCs) used in the PLC function
Global device comment information used in the PLC function
Function block source information

◆ Backup/restore operation

- The GOT backs up all applicable data in all the inverters that can be identified with the network numbers and station numbers in the controller list file.
- The GOT restores all relevant data of the inverters selected based on the network numbers and station numbers using the backup data.

- The backup/restore cannot be performed in the following cases.

Operation	Inverter status
Backup	During an inverter reset A password is registered or password protection is enabled (**Pr.297** ≠ "9999"). During parameter copy using an operation panel or USB memory device (during writing to the inverter) During restore While password protection is enabled for files used in the PLC function (read protection) While PLC function project data is written to, read from, or verified against a USB memory device
Restore	During an inverter reset During running During auto tuning A password is registered or password protection is enabled (**Pr.297** ≠ "9999"). While parameter write is disabled (**Pr.77** = "1") During parameter copy using an operation panel or USB memory device (during writing to / reading from / verification against the inverter) During backup operation During the RUN status of the PLC function While password protection is enabled for files used in the PLC function (write protection) While PLC function project data is written to, read from, or verified against a USB memory device

- On the operation panel, "RD" is displayed during backup, and "WR" is displayed during restore.

NOTE

- To enable the restore operation, **Pr.434 Network number (CC-Link IE)** and Pr.435 Station number (CC-Link IE) must be set.
- Backup is performed for parameters for which parameter copy can be performed.
- For the details of backup/restore function, refer to the GOT2000 Series User's Manual (Monitor).

上正科技有限公司
購買、維修 此手冊零組件
電話： 037-466333
Email: service@repairtw.com
Line id: @zzzz
www.repairtw.com

5.13 (G) Control parameters

Purpose	Parameter to set			Refer to page
To set the starting torque manually	Manual torque boost	P.G000, P.G010	Pr.0, Pr.46	527
To set the motor constant	Base frequency, base frequency voltage	P.G001, P.G002, P.G011	Pr.3, Pr.19, Pr.47	528
To select the V/F pattern matching the application	Load pattern selection	P.G003	Pr.14	530
To improve the torque in a low-speed range	Excitation current low-speed scaling factor	P.G003, P.G080, P.G201, P.G202, P.G301, P.G302	Pr.14, Pr.85, Pr.86, Pr.565, Pr.566, Pr.617	531
To perform energy saving operation	Energy saving operation	P.G030	Pr.60	532
To use a special motor	Adjustable 5 points V/F	P.C100, P.G040 to P.G049	Pr.71, Pr.100 to Pr.109	533
To compensate the motor slip amount when replacing an SF-JR motor with an SF-PR motor	SF-PR slip amount adjustment mode	P.G060, P.G061	Pr.673, Pr.674	534
To adjust the motor braking torque	DC injection brake	P.G100, P.G101, P.G110	Pr.10 to Pr.12	535
To coast the motor to a stop	Output stop function	P.G105	Pr.522	536
	Selection of motor stop method	P.G106	Pr.250	538
To use the regeneration unit to increase the motor braking torque	Regenerative brake selection	P.E300, P.T721	Pr.30, Pr.599	539
To operate the inverter with DC power supply	DC feeding mode	P.E300	Pr.30	539
To avoid overvoltage fault due to regenerative driving by automatic adjustment of output frequency	Regeneration avoidance function	P.G120 to P.G125	Pr.882 to Pr.886, Pr.665	545
To decrease the deceleration time of the motor	Increased magnetic excitation deceleration	P.G130 to P.G132	Pr.660 to Pr.662	547
To select the control method	Control method selection	P.G200	Pr.800	169
To secure the low-speed torque by compensating the slip of the motor	Slip compensation	P.G203 to P.G205	Pr.245 to Pr.247	548
To adjust the speed control gain	Speed control gain	P.G211, P.G212, P.G311, P.G312	Pr.820, Pr.821, Pr.830, Pr.831	182
To adjust the torque control gain	Torque control gain	P.G213, P.G214, P.G313, P.G314	Pr.824, P.825, Pr.834, P.835	182
To stabilize torque feedback signal	Torque detection filter	P.G216, P.G316	Pr.827, Pr.837	185
To suppress the machine resonance	Speed smoothing control	P.G410, P.G411	Pr.653, Pr.654	549
To adjust the speed gain for Advanced magnetic flux vector control	Speed control gain	P.G932, P.G942	Pr.89, Pr.569	172

上正科技有限公司
購買・維修 此手冊零組件
電話: 037-466333
Email: service@repairtw.com
Line id: @zzzz
www.repairtw.com

5.13.1 Manual torque boost

V/F

Voltage drop in the low-frequency range can be compensated, improving reduction of the motor torque in the low-speed range.

- Motor torque in the low-frequency range can be adjusted according to the load, increasing the motor torque at the start up.
- By using the RT signal, it is possible to switch between 2 types of torque boost.

Pr.	Name	Initial value	Setting range	Description
0 G000	Torque boost	6%*1	0 to 30%	Set the output voltage at 0 Hz in %.
		4%*2		
		3%*3		
		2%*4		
		1.5%*5		
		1%*6		
46 G010	Second torque boost	9999	0 to 30%	Set the torque boost value at when the RT signal is ON.
			9999	Without the second torque boost.

*1 Initial value for the FR-F820-00046(0.75K) or lower and FR-F840-00023(0.75K) or lower.
*2 Initial value for the FR-F820-00077(1.5K) to FR-F820-00167(3.7K) and the FR-F840-00038(1.5K) to FR-F840-00083(3.7K).
*3 Initial value for the FR-F820-00250(5.5K), FR-F820-00340(7.5K), FR-F840-00126(5.5K), and FR-F840-00170(7.5K).
*4 Initial value for the FR-F820-00490(11K) to FR-F820-01540(37K), and the FR-F840-00250(11K) to FR-F840-00770(37K).
*5 Initial value for the FR-F820-01870(45K), FR-F820-02330(55K), FR-F840-00930(45K), and FR-F840-01160(55K).
*6 Initial value for the FR-F820-03160(75K) or higher and FR-F840-01800(75K) or higher.

◆ Starting torque adjustment

- Assuming **Pr.19 Base frequency voltage** is 100%, set the output voltage at 0 Hz to **Pr.0 (Pr.46)** in percentage.
- Perform the adjustment of the parameter little by little (approximately 0.5%), and confirm the status of the motor each time. The motor may overheat when the value is set too high. Do not use more than 10% as a guideline.

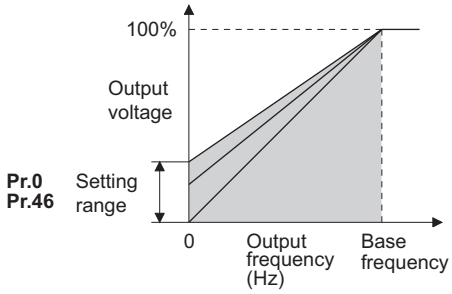

◆ Setting multiple torque boosts (RT signal, Pr.46)

- When changing the torque boost depending on the application or when using single inverter switching between multiple motors, use the second torque boost.
- **Pr.46 Second torque boost** is enabled when the RT signal is ON.

NOTE

上正科技有限公司
購買、維修、性主卅零組件
電話： 037-466333
email service@repairtw.com
Line Id: @2222
www.repairtw.com

- The RT signal is a second function selection signal which also enables other second functions. (Refer to page 358.)
- The RT signal is assigned to terminal RT in the initial status. Set "3" in one of **Pr.178 to Pr.189 (Input terminal function selection)** to assign the RT signal to another terminal.
- Set a larger value when the distance between the inverter and the motor is long or when there is not enough motor torque in the low-speed range. It may cause overcurrent trip when it is set too large.
- Setting for **Pr.0** and **Pr.46** becomes enabled only when the V/F control is selected.
- When the initial value is set in **Pr.0**, the **Pr.0** setting is automatically changed by changing the **Pr.71 Applied motor** or **Pr.81 Number of motor poles** setting. (Refer to page 362.)
- Changing the terminal assignment using **Pr.178 to Pr.189 (Input terminal function selection)** may affect the other functions. Set parameters after confirming the function of each terminal.

Parameters referred to

Pr.3 Base frequency, Pr.19 Base frequency voltage ☞ page 528
Pr.71 Applied motor ☞ page 362
Pr.178 to Pr.189 (Input terminal function selection) ☞ page 355

5.13.2 Base frequency voltage

V/F

Use this function to adjust the inverter outputs (voltage, frequency) to match with the motor rating.

Pr.	Name	Initial value		Setting range	Description
		FM	CA		
3 G001	**Base frequency**	60 Hz	50 Hz	0 to 590 Hz	Set the frequency at the rated motor torque. (50/60 Hz)
19 G002	**Base frequency voltage**	9999	8888	0 to 1000 V	Set the base voltage.
				8888	95% of the power supply voltage
				9999	Same as the power supply voltage
47 G011	**Second V/F (base frequency)**	9999		0 to 590 Hz	Set the base frequency when the RL signal is ON.
				9999	Second V/F disabled

◆ Base frequency setting (Pr.3)

- When operating a standard motor, generally set the rated frequency of the motor in **Pr.3 Base frequency**. When the motor operation require switching to the commercial power supply, set the power supply frequency in **Pr.3**.
- When the frequency described on the motor rating plate is "50 Hz" only, make sure to set to 50 Hz. When it is set to 60 Hz, the voltage will drop too much, causing insufficient torque. As a result, the inverter output may be shut off due to overload. A caution is required especially in case of **Pr.14 Load pattern selection** = "1" (variable torque load).
- When using the Mitsubishi Electric constant torque motor, set **Pr.3** to 60 Hz.

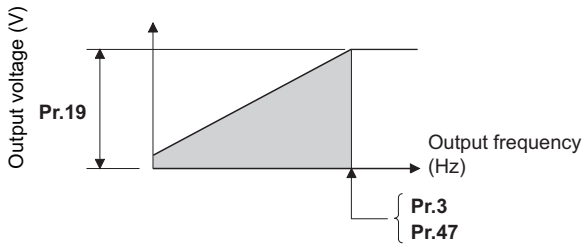

◆ Setting multiple base frequencies (Pr.47)

- To change the base frequency when using a single inverter switching between multiple motors, use **Pr.47 Second V/F (base frequency)**.
- **Pr.47** is enabled when the RT signal is ON.

NOTE

- The RT signal is a second function selection signal which also enables other second functions. (Refer to page 358.)
- The RT signal is assigned to terminal RT in the initial status. Set "3" in one of **Pr.178 to Pr.189 (Input terminal function selection)** to assign the RT signal to another terminal.

FIT科技有限公司
購買、維修 此手冊零組件
電話： 03-4368333
Email: service@repairtw.com
Line id: @zzzz
www.repairtw.com

◆ Setting of base frequency voltage (Pr.19)

- Use **Pr.19 Base frequency voltage** to set the base voltage (for example, rated motor voltage).
- When it is set lower than the power supply voltage, maximum output voltage of the inverter will be the voltage set in **Pr.19**.
- **Pr.19** can be used in the following cases.
  (a) When regenerative driving (continuous regeneration, etc.) is performed frequently
  Output voltage will get higher than the specification during the regenerative driving, which may cause overcurrent trip (E.OC[]) by the increase in motor current.
  (b) When the fluctuation of power supply voltage is high
  When the power supply voltage exceeds the rated voltage of the motor, fluctuation of rotation speed or overheating of motor may occur due to excessive torque or increase in motor current.

NOTE

- When the Advanced magnetic flux vector control or PM motor control is selected, **Pr.3, Pr.47,** and **Pr.19** will become disabled, and **Pr.83** and **Pr.84** will become enabled.
  However, S-pattern curve with **Pr.29 Acceleration/deceleration pattern selection** = "1" (S-pattern acceleration/deceleration A) will make **Pr.3** or **Pr.47** enabled. (S-pattern curve under PM motor control is the rated frequency of the motor.)
- When **Pr.71 Applied motor** = "2" (adjustable 5 points V/F), setting for **Pr.47** will become disabled. Also, **Pr.19** cannot be set to "8888" or "9999".
- Changing the terminal assignment using **Pr.178 to Pr.189 (Input terminal function selection)** may affect the other functions. Set parameters after confirming the function of each terminal.

Parameters referred to

Pr.14 Load pattern selection ☞ page 530
Pr.29 Acceleration/deceleration pattern selection ☞ page 219
Pr.71 Applied motor ☞ page 362
Pr.83 Rated motor voltage, Pr.84 Rated motor frequency ☞ page 366
Pr.178 to Pr.189 (Input terminal function selection) ☞ page 355

5.13.3 Load pattern selection

V/F

Optimal output characteristics (V/F characteristics) for application or load characteristics can be selected.

Pr.	Name	Initial value	Setting range	Description
14 G003	Load pattern selection	1	0	For constant-torque load
			1	For variable-torque load
			12 to 15*1	Excitation current low-speed scaling factor (Refer to page 531.)

*1 When the setting value is selected under V/F control, the operation is the same as the one for constant-torque load (**Pr.14** = "0").

◆ Application for constant-torque load (Pr.14 = "0")

- The output voltage will change linearly against the output frequency at the base frequency or lower.
- Set this parameter when driving a load that has constant load torque even when the rotation speed is changed, such as conveyor, dolly, or roll drive.

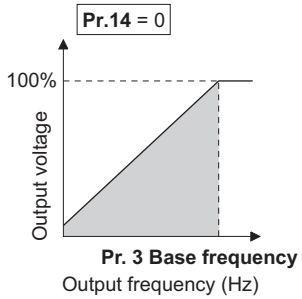

上正科技有限公司
購買、維修 此手冊零組件
電話： 037-406333
Email: service@repairtw.com
Line id: @zzzz
www.repairtw.com

Point

Select for constant-torque load (setting value "0") even for fan and pump in following cases.

- When accelerating a blower with large moment of inertia (J) in a short period of time.
- When it is a constant-torque load such as rotary pump or gear pump.
- When the load torque increases in low speed such as screw pump.

◆ Application for variable-torque load (Pr.14 = "1", initial value)

- The output voltage will change in square curve against the output frequency at the base frequency or lower. (1.75th-power curve for FR-F820-01540(37K) or higher, and FR-F840-00770(37K) or higher)
- Set this parameter when driving a load with load torque change proportionally against the square of the rotation speed, such as a fan or pump.

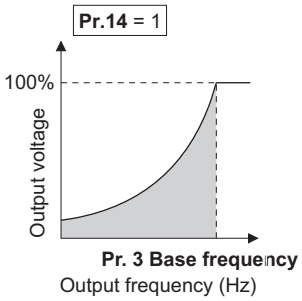

NOTE

- **Pr.14** will become enabled under V/F control.

Parameters referred to

Pr.0 Torque boost ☞ page 527
Pr.3 Base frequency ☞ page 528
Pr.178 to Pr.189 (Input terminal function selection) ☞ page 355

5.13.4 Excitation current low-speed scaling factor

Magnetic flux

Under Advanced magnetic flux vector control, the excitation current scaling factor in the low-speed range can be adjusted.

Pr.	Name	Initial value	Setting range	Description
14 **G003**	**Load pattern selection**	0	0, 1	Excitation current low-speed scaling factor: **Pr.86** Refer to page 530 for details of the operation under V/F control.
			12*1	Forward rotation excitation current low-speed scaling factor: **Pr.86** Reverse rotation excitation current low-speed scaling factor: **Pr.617**
			13*1	Forward rotation excitation current low-speed scaling factor: **Pr.617** Reverse rotation excitation current low-speed scaling factor: **Pr.86**
			14*1	Forward rotation excitation current low-speed scaling factor: **Pr.86** Reverse rotation excitation current low-speed scaling factor: **Pr.617**
			15*1	Forward rotation excitation current low-speed scaling factor: **Pr.617** Reverse rotation excitation current low-speed scaling factor: **Pr.86**
85 **G201**	**Excitation current break point**	9999	0 to 400 Hz	Set the frequency at which increased excitation is started.
			9999	SF-PR/SF-HR/SF-HRCA motor: The predetermined frequency is applied. Motor other than the above: 10 Hz is applied.
86 **G202**	**Excitation current low-speed scaling factor**	9999	0 to 300%	Set an excitation current scaling factor at 0 Hz.
			9999	SF-PR/SF-HR/SF-HRCA motor: The predetermined scaling factor is applied. Motor other than the above: 130% is applied.
617 **G080**	**Reverse rotation excitation current low-speed scaling factor**	9999	0 to 300%	Set an excitation current scaling factor when different excitation current scaling factors are used for forward and reverse rotation.
			9999	SF-PR/SF-HR/SF-HRCA motor: The predetermined scaling factor is applied. Motor other than the above: 130% is applied.
565 **G301**	**Second motor excitation current break point**	9999	0 to 400 Hz	Set an excitation current break point when the RT signal is ON.
			9999	SF-PR/SF-HR/SF-HRCA motor: The predetermined frequency is applied. Motor other than the above: 10 Hz is applied.
566 **G302**	**Second motor excitation current low-speed scaling factor**	9999	0 to 300%	Set an excitation current low-speed scaling factor when the RT signal is ON.
			9999	SF-PR/SF-HR/SF-HRCA motor: The predetermined scaling factor is applied. Motor other than the above: 130% is applied.

*1 The function is enabled under Advanced magnetic flux vector control. When **Pr.14** = "12 to 15" and V/F control is selected, the operation is the same as the one for constant-torque load (**Pr.14** = "0"). (Refer to page 530.)

上正科技有限公司
購買、維修 此手冊原件
電話： 037-466[illegible]
Email: service@repairtw.com
Line id: @zzzz
www.repairtw.com

- Under Advanced magnetic flux vector control, excitation current in the low-speed range can be increased to improve torque. When **Pr.14** = "12 to 15", the excitation current scaling factor can be switched for the forward/reverse rotation.
- Increased excitation is applied when the output frequency is equal to or lower than the setting in **Pr.85 Excitation current break point**. The excitation current scaling factor at 0 Hz is set in **Pr.86 Excitation current low-speed scaling factor**. Use **Pr.565 Second motor excitation current break point and Pr.566 Second motor excitation current low-speed scaling factor** for the setting for using the second motor (RT signal-ON).

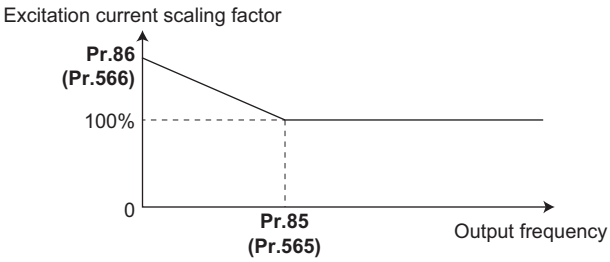

- An excitation current low-speed scaling factor set in the parameter shown in the table is used according to the **Pr.14** setting and other conditions.

Pr.14 setting	During forward rotation		During reverse rotation	
	RT signal OFF	RT signal ON	RT signal OFF	RT signal ON
0, 1	**Pr.86**	**Pr.566**	**Pr.86**	**Pr.566**
12	**Pr.86**	**Pr.566**	**Pr.617**	**Pr.617**
13	**Pr.617**	**Pr.617**	**Pr.86**	**Pr.566**
14	**Pr.86**	**Pr.566**	**Pr.617**	**Pr.566**
15	**Pr.617**	**Pr.566**	**Pr.86**	**Pr.566**

- When the SF-PR/SF-HR/SF-HRCA motor is used (**Pr.71** = "40, 43, 44, 50, 53, 54, 70, 73, or 74") and "9999" is set in **Pr.85**/**Pr.86**, the predetermined setting in the following table is applied.

Motor capacity (kW)	SF-PR						SF-HR/SF-HRCA					
	Pr.81 = "2"		Pr.81 = "4"		Pr.81 = "6"		Pr.81 = "2"		Pr.81 = "4"		Pr.81 = "6"	
	Pr.85	Pr.86	Pr.85	Pr.86	Pr.85	Pr.86	Pr.85	Pr.86	Pr.85	Pr.86	Pr.85	Pr.86
0.4	—	—	—	—	—	—	10 Hz	130%	10 Hz	130%	10 Hz	130%
0.75	20 Hz	130%	20 Hz	130%	10 Hz	130%	10 Hz	130%	10 Hz	130%	10 Hz	130%
1.5	30 Hz	140%	10 Hz	130%	10 Hz	130%	10 Hz	130%	10 Hz	130%	10 Hz	130%
2.2	10 Hz	150%	10 Hz	130%	20 Hz	130%	20 Hz	150%	10 Hz	130%	10 Hz	130%
3.7	30 Hz	150%	25 Hz	133%	20 Hz	130%	30 Hz	160%	30 Hz	140%	10 Hz	130%
5.5	10 Hz	150%	10 Hz	130%	30 Hz	130%	30 Hz	140%	30 Hz	140%	20 Hz	140%
7.5	10 Hz	150%	30 Hz	118%	30 Hz	130%	30 Hz	140%	30 Hz	140%	30 Hz	150%
11	10 Hz	150%	20 Hz	140%	10 Hz	130%	30 Hz	140%	10 Hz	130%	30 Hz	130%
15	10 Hz	150%	30 Hz	130%	30 Hz	130%	20 Hz	140%	10 Hz	130%	30 Hz	130%
18.5	10 Hz	150%	30 Hz	130%	20 Hz	130%	30 Hz	150%	30 Hz	140%	30 Hz	140%
22	30 Hz	130%	10 Hz	130%	10 Hz	130%	30 Hz	150%	30 Hz	140%	20 Hz	140%
30	10 Hz	150%	20 Hz	130%	10 Hz	130%	30 Hz	150%	20 Hz	150%	10 Hz	130%
37	20 Hz	140%	10 Hz	140%	20 Hz	130%	20 Hz	160%	20 Hz	150%	10 Hz	130%
45	10 Hz	140%	20 Hz	130%	10 Hz	130%	10 Hz	130%	20 Hz	140%	10 Hz	140%
55	20 Hz	140%	30 Hz	130%	—	—	10 Hz	140%	20 Hz	150%	—	—

上正科技有限公司
購買 維修 地手機零組件
電話： 037-466333
Email: service@repairtw.com
Line id: @zzzz
www.repairtw.com

5.13.5 Energy saving control

V/F Magnetic flux

The inverter will automatically perform energy saving operation without setting detailed parameters.
This control method is suitable for applications such as fans and pumps.

Pr.	Name	Initial value	Setting range	Description
60 **G030**	**Energy saving control selection**	0	0	Normal operation
			4	Energy saving operation
			9	Optimum excitation control

◆ Energy saving operation (Pr.60 = "4")

- Setting **Pr.60** = "4" will select the energy saving operation.
- With the energy saving operation, the inverter will automatically control the output voltage so the inverter output power during the constant-speed operation will become minimal.
- Energy saving operation will be enabled under V/F control.

◆ Optimum excitation control (Pr.60 = "9")

- Setting **Pr.60** = "9" will select the Optimum excitation control.
- The Optimum excitation control is a control method to decide the output voltage by controlling the excitation current so the efficiency of the motor is maximized.
- Optimum excitation control will be enabled under V/F control and Advanced magnetic flux vector control.

NOTE

- In the energy saving operation mode, an energy saving effect is not expected for applications with high load torque or with the equipment with frequent acceleration and deceleration.
- In the Optimum excitation control mode, an energy saving effect is not expected when the motor capacity is extremely small compared with the inverter capacity or when multiple motors are connected to a single inverter.
- When the energy saving operation mode or Optimum excitation control mode is selected, the deceleration time may become longer than the setting value. Also, it may cause overvoltage more often compared to constant-torque load characteristics, so set the deceleration time longer.
- When the motor becomes unstable during the acceleration, set the acceleration time longer.
- Output current may increase slightly with the energy saving operation mode or the Optimum excitation control mode since the output voltage is controlled.

5.13.6 Adjustable 5 points V/F

V/F

By setting a desired V/F characteristic from the start up to the base frequency or base voltage with the V/F control (frequency voltage/frequency), a dedicated V/F pattern can be generated.
The optimal V/F pattern matching the torque characteristics of the facility can be set.

Pr.	Name	Initial value	Setting range	Description
71 **C100**	**Applied motor**	0	2	Standard motor (such as SF-JR) Adjustable 5 points V/F
			Others	Refer to page 362.
100 **G040**	**V/F1 (first frequency)**	9999	0 to 590 Hz, 9999	Set each point of the V/F pattern (frequency, voltage). 9999: Do not set V/F.
101 **G041**	**V/F1 (first frequency voltage)**	0 V	0 to 1000 V	
102 **G042**	**V/F2 (second frequency)**	9999	0 to 590 Hz, 9999	
103 **G043**	**V/F2 (second frequency voltage)**	0 V	0 to 1000 V	
104 **G044**	**V/F3 (third frequency)**	9999	0 to 590 Hz, 9999	
105 **G045**	**V/F3 (third frequency voltage)**	0 V	0 to 1000 V	
106 **G046**	**V/F4 (fourth frequency)**	9999	0 to 590 Hz, 9999	
107 **G047**	**V/F4 (fourth frequency voltage)**	0 V	0 to 1000 V	
108 **G048**	**V/F5 (fifth frequency)**	9999	0 to 590 Hz, 9999	
109 **G049**	**V/F5 (fifth frequency voltage)**	0 V	0 to 1000 V	

上正科技有限公司
購買、維修 此手冊零組件
電話： 037-466333
Email: service@repairtw.com
Line id: @zzzz
www.repairtw.com

- By setting the **V/F1 (first frequency voltage/first frequency) to V/F5** parameters in advance, a desired V/F characteristic can be obtained.
- For an example, with the equipment with large static friction factor and small dynamic friction factor, large torque is required only at the start up, so a V/F pattern that will raise the voltage only at the low-speed range is set.
- Setting procedure

1. Set the rated motor voltage in **Pr.19 Base frequency voltage**.
(No function at the setting of "9999" or "8888".)

2. Set **Pr.71 Applied motor** = "2" (adjustable 5 points V/F).

3. Set frequency and voltage to be set in **Pr.100 to Pr.109**.

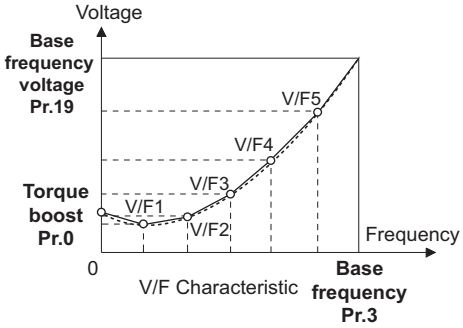

V/F Characteristic

⚠CAUTION

- Make sure to set the parameters correctly according to the motor used. Incorrect setting may cause the motor to overheat and burn.

NOTE

- The adjustable 5 points V/F is enabled under V/F control.
- When **Pr.19 Base frequency voltage** = "8888 or 9999", setting of **Pr.71** = "2" is not available. To set "2" in **Pr.71**, set the rated motor voltage in **Pr.19**.
- A write disable error "Er 1" is generated when the same frequency value is used for multiple points.
- Set frequency or voltage for each point in **Pr.100 to Pr.109** within the range of **Pr.3 Base frequency** or **Pr.19 Base frequency voltage**.
- When **Pr.71** = "2", **Pr.47 Second V/F (base frequency)** is not available.
- When **Pr.71** = "2", the inverter calculates the characteristic of the electronic thermal relay for a standard motor.
- By simultaneously using **Pr.60 Energy saving control selection** and the adjustable 5 points V/F, further energy saving effect is expected.
- The **Pr.0 Torque boost** and **Pr.12 DC injection brake operation voltage** settings are automatically changed according to the **Pr.71** setting. (Refer to page 365.)

長正科技有限公司
購買、維修 此手冊零組件
電話: 03-7400393
Email: service@repairtw.com
Line id: @zzzz
www.repairtw.com

Parameters referred to

Pr.0 Torque boost page 527
Pr.3 Base frequency, Pr.19 Base frequency voltage page 528
Pr.12 DC injection brake operation voltage page 535
Pr.47 Second V/F (base frequency) page 533
Pr.60 Energy saving control selection page 532
Pr.71 Applied motor, Pr.450 Second applied motor page 362

5.13.7 SF-PR slip amount adjustment mode

V/F

- As compared to our conventional SF-JR motor, the slip amount is small for the high-performance energy-saving SF-PR motor. When replacing the SF-JR to the SF-PR, the slip amount is reduced and the rotations per minute increases. Therefore, when the SF-PR is used with the same frequency setting as that of the SF-JR, power consumption may increase as compared to the SF-JR.
- By setting the slip amount adjustment mode, the frequency command can be adjusted to keep the rotations per minute of the SF-PR equivalent to those of the SF-JR for power consumption reduction.

Pr.	Name	Initial value	Setting range	Description
673 **G060**	**SF-PR slip amount adjustment operation selection**	9999	2, 4, 6	Set the number of poles of the SF-PR.
			9999	The slip amount adjustment is disabled.
674 **G061**	**SF-PR slip amount adjustment gain**	100%	0 to 500%	Setting is available for fine adjustment of the slip amount.

- By setting the number of SF-PR motor poles in **Pr.673 SF-PR slip amount adjustment operation selection**, the SF-PR slip amount adjustment mode is activated.
- The SF-PR slip amount adjustment mode is available only under V/F control.

- Use **Pr.674 SF-PR slip amount adjustment gain** to fine-tune the rotations per minute. To reduce the rotations per minute (to increase the compensation frequency), set a larger value in **Pr.674**. To increase the rotations per minute (to reduce the compensation frequency), set a smaller value in **Pr.674**. (Lower rotations per minute reduce the power consumption, and higher rotations per minute increase the power consumption.)

NOTE

- The slip amount adjustment is not available in the following conditions.
  During acceleration/deceleration, during DC injection brake operation, during PID control, during stall prevention operation, during regeneration avoidance operation, during traverse operation, and while the slip compensation is valid (**Pr.245**).
- The slip amount adjustment is not available when the applicable motor capacity of the inverter is not compatible with the SF-PR. (For the details of applicable motor capacity, refer to page 612.)

5.13.8 DC injection brake

- Adjust the braking torque and timing to stop the motor using the DC injection brake.
  By the DC injection brake operation, DC voltage is applied to the motor to prevent rotation of the motor shaft. When a motor shaft is rotated by external force, the motor shaft does not go back to the original position.

Pr.	Name	Initial value	Setting range	Description
10 **G100**	**DC injection brake operation frequency**	3 Hz	0 to 120 Hz	Set the operation frequency for the DC injection brake.
			9999	The operation starts at the frequency set in **Pr.13** or lower.
11 **G101**	**DC injection brake operation time**	0.5 s	0	Without DC injection brake.
			0.1 to 10 s	Set the operation time for the DC injection brake.
			8888	The operation continues while the X13 signal is ON.
12 **G110**	**DC injection brake operation voltage**	4%*1	0 to 30%	Set the DC injection brake voltage (torque). When set to "0", the DC injection brake is not applied.
		2%*2		
		1%*3		

*1 The initial value for the FR-F820-00340(7.5K) or lower and FR-F840-00170(7.5K) or lower.
*2 Initial value for the FR-F820-00490(11K) to FR-F820-02330(55K), and the FR-F840-00250(11K) to FR-F840-01160(55K).
*3 Initial value for the FR-F820-03160(75K) or higher and FR-F840-01800(75K) or higher.

上正科技有限公司
購買、維修 此手冊零組件
電話：037-466333
Email: service@repairtw.com
Line id: @zzz
www.repairtw.com

◆ Setting of operating frequency (Pr.10)

- By setting the frequency to operate the DC injection brake to **Pr.10 DC injection brake operation frequency**, the DC injection brake will operate when it reaches this frequency at the time of deceleration.
- When **Pr.10** = "9999", DC injection brake will start when the frequency reaches **Pr.13 Starting frequency**.
- The DC injection brake operation frequency depends on the stopping method.

Stopping method	Parameter setting	DC injection brake operation frequency
Press the STOP key on the operation panel. Turn OFF the STF/STR signal.	0.5 Hz or higher in **Pr.10**	**Pr.10** setting
	Lower than 0.5 Hz in **Pr.10**, and 0.5 Hz or higher in **Pr.13**	0.5 Hz
	Lower than 0.5 Hz in both **Pr.10** and **Pr.13**	**Pr.10** or **Pr.13** setting, whichever larger
Set frequency to 0 Hz	—	**Pr.13** setting or 0.5 Hz, whichever smaller

- The DC injection brake operation frequency will be fixed to 0 Hz under PM motor control.

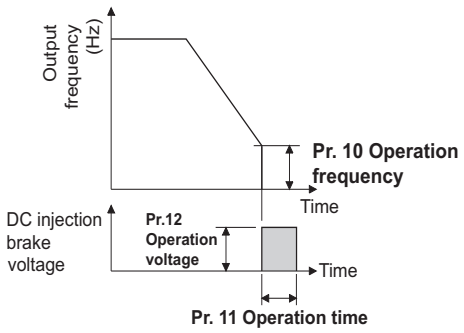

◆ Setting of operation time (X13 signal, Pr.11)

- Set the operation time for the DC injection brake in **Pr.11 DC injection brake operation time**.

- When the motor does not stop due to large load moment (J), increase the setting to ensure the effect.
- The DC injection brake operation is not available when "0" is set in **Pr.11**. (The motor will coast to stop.)
- When **Pr.11** = "8888", DC injection brake will operate when the X13 signal is turned ON. DC injection brake will operate when the X13 signal is turned ON even while operating.
- For the X13 signal input, set "13" in any of **Pr.178 to Pr.189** to assign the function.

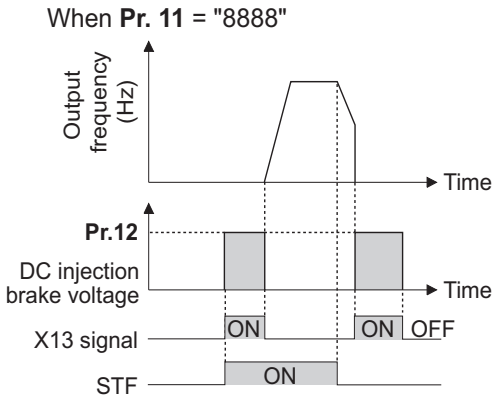

NOTE

- The X13 signal is disabled during PM motor control.

◆ Setting of operation voltage (torque) (Pr.12)

- Set the percentage against the power supply voltage in **Pr.12 DC injection brake operation voltage**.
- The DC injection brake operation is not available when "0" is set in **Pr.12**. (The motor will coast to stop.)

上正科技有限公司
購買、維修 此手冊零組件
電話： 037-466333
Email service@repairtw.com
Line id @zzzz
www.repairtw.com

NOTE

- When the setting of **Pr.12** is the initial value, the setting corresponding to the motor is set according to the **Pr.71 Applied motor** setting. (Refer to page 365.)
  However, when an energy saving motor (SF-HR or SF-HRCA) is used, change the **Pr.12** setting as shown below.

Inverter	Pr.12 setting
FR-F820-00167(3.7K) or lower FR-F840-00083(3.7K) or lower	4%
FR-F820-00250(5.5K), FR-F820-00340(7.5K) FR-F840-00126(5.5K), FR-F840-00170(7.5K)	3%
FR-F820-00490(11K) to FR-F820-00930(22K), FR-F820-01540(37K) or higher FR-F840-00250(11K) to FR-F840-00470(22K), FR-F840-00770(37K) or higher	2%
FR-F820-01250(30K) FR-F840-00620(30K)	1.5%

- Even if a larger value is set in **Pr.12**, braking torque is limited so the output current will be within the rated current of the inverter.

⚠CAUTION

- Install a mechanical brake to make an emergency stop or to stay stopped for a long time.

Parameters referred to

Pr.13 Starting frequency ☞ page 225, page 226
Pr.71 Applied motor ☞ page 362
Pr.80 Motor capacity ☞ page 366
Pr.178 to Pr.189 (Input terminal function selection) ☞ page 355

5.13.9 Output stop function

The motor coasts to a stop (inverter output is shutoff) when the inverter output frequency falls to **Pr.522** setting or lower.

Pr.	Name	Initial value	Setting range	Description
522 **G105**	**Output stop frequency**	9999	0 to 590 Hz	Set the frequency to start coasting to a stop (output shutoff).
			9999	No function

- When both of the frequency setting signal and output frequency fall to the frequency set in **Pr.522** or lower, the inverter stops the output and the motor coasts to a stop.
- The motor re-starts when the frequency setting signal exceeds **Pr.522** + 2 Hz and is accelerated at the **Pr.13 Starting frequency** (0.01 Hz under PM motor control).

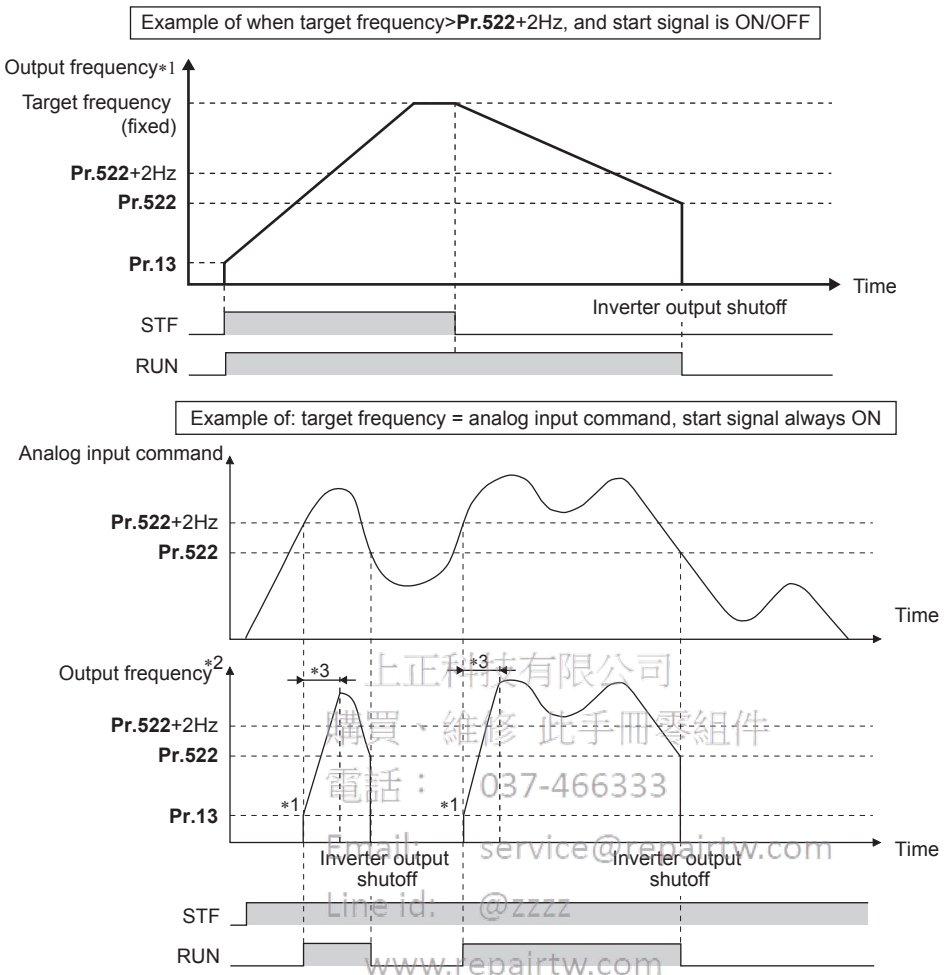

上正科技有限公司
購買、維修 此手冊零組件
電話： 037-466333
Email: service@repairtw.com
Line id: @zzzz
www.repairtw.com

*1 The output frequency to be compared with the **Pr.522** setting is the output frequency before slip compensation (V/F control or Advanced magnetic flux vector control), or the speed command value converted into the frequency (PM motor control).

*2 The motor is accelerated at the **Pr.13 Starting frequency** (0.01 Hz under PM motor control).

*3 The steepness of the slope depends on the acceleration/deceleration time settings such as **Pr.7**.

NOTE

- When the output stop function is enabled (**Pr.522** ≠ "9999"), the DC injunction brake operation is disabled and the motor coasts to stop when the output frequency drops to the **Pr.522** setting or lower.
- The motor starts acceleration again at **Pr.13 Starting frequency** (0.01 Hz under PM motor control) when the command value exceeds **Pr.522** + 2 Hz again if the start signal remains ON while the motor is coasting after the frequency drops to the **Pr.522** setting or lower. Re-acceleration during coasting may cause an output shutoff of the inverter depending on the parameter setting. (Activation of the restart function is recommended especially for a PM motor.)
- The output stop frequency function is disabled during PID control, JOG operation, power failure stop, traverse function operation, or offline auto tuning.
- During the output stop due to the output stop function (when forward/reverse command is given, but frequency command is not given), the FWD/REV LED indicator on the operation panel blinks fast. (When the frequency command is not given even if the forward/reverse command is given.)

⚠CAUTION

- A PM motor is a motor with interior permanent magnets. High voltage is generated at motor terminals while the motor is running.
  Do not touch motor terminals and other parts until the motor stops to prevent an electric shock.

Parameters referred to

Pr.10 DC injection brake operation frequency, Pr.11 DC injection brake operation time, Pr.12 DC injection brake operation voltage ☞ page 535

5.13.10 Stop selection

Select the stopping method (deceleration stop or coasting) at turn-OFF of the start signal.

Coasting can be selected for the cases such that the motor is stopped with a mechanical brake at turn-OFF of the start signal.

The operation of the start signal (STF/STR) can be selected. (For the start signal selection, refer to page 359.)

Pr.	Name	Initial value	Setting range	Description	
				Start signal (STF/STR)*1	Stop operation
250 G106	Stop selection	9999	0 to 100 s	STF signal: Forward rotation start STR signal: Reverse rotation start	The motor coasts to a stop after a lapse of the setting time when the start signal is turned OFF.
			1000 to 1100 s	STF signal: Start signal STR signal: Forward/reverse rotation signal	The motor coasts to a stop after a lapse of the (**Pr.250** - 1000) seconds when the start signal is turned OFF.
			9999	STF signal: Forward rotation start STR signal: Reverse rotation start	The motor is decelerated to a stop when the start signal is turned OFF.
			8888	STF signal: Start signal STR signal: Forward/reverse rotation signal	

*1 For the start signal selection, refer to page 359.

◆ To decelerate the motor to a stop

- Set **Pr.250** = "9999 (initial value) or 8888".
- The motor is decelerated to a stop when the start signal (STF/STR) is turned OFF.

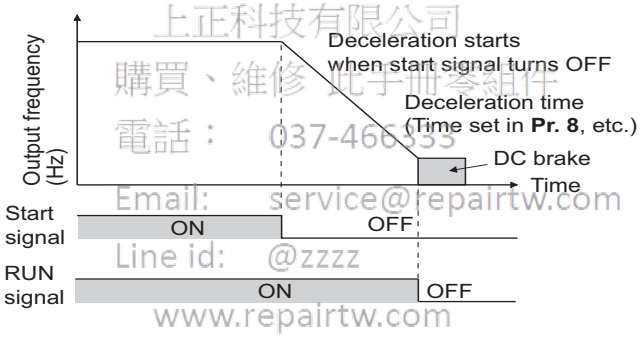

上正科技有限公司
購買、維修 電子冊零組件
電話： 037-466333
Email: service@repairtw.com
Line id: @zzzz
www.repairtw.com

◆ To coast the motor to a stop

- Set the time required to shut off the output after the start signal is turned OFF in **Pr.250**. When "1000 to 1100" is set, output is shut off after a lapse of the (**Pr.250** - 1000) seconds.
- The output is shut off after a lapse of the setting time of **Pr.250** when the start signal is turned OFF. Motor coasts to a stop.
- The RUN signal is turned OFF when the output is shut off.

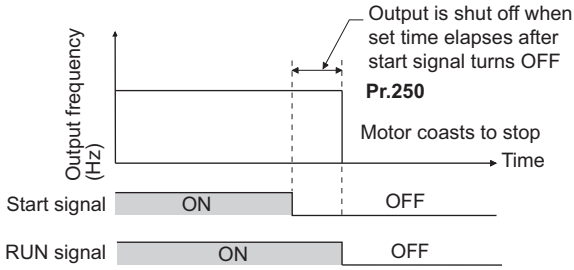

NOTE

- The stop selection setting is disabled when the following functions are operating.
  Power failure stop function (**Pr.261**)
  PU stop (**Pr.75**)
  Deceleration stop due to a communication error (**Pr.502**)
  Offline auto tuning (with motor rotation)
- When **Pr.250** ≠ "9999 or 8888", acceleration/deceleration is performed in accordance to the frequency command until the output is shut off by turning OFF the start signal.
- When the restart signal is turned ON during the motor coasting, the operation is resumed from **Pr.13 Starting frequency**.

Parameters referred to

Pr.7 Acceleration time, Pr.8 Deceleration time ☞ page 216
Pr.13 Starting frequency ☞ page 225, page 226
Pr.75 Reset selection/disconnected PU detection/PU stop selection ☞ page 188
Pr.261 Power failure stop selection ☞ page 458
Pr.502 Stop mode selection at communication error ☞ page 478

5.13.11 Regenerative brake selection and DC feeding mode

- For the operation with frequent starts and stops, the regenerative power can be consumed by using the optional brake unit (FR-BU2, BU, or FR-BU).
- The power regeneration common converter (FR-CV) or power regeneration converter (MT-RC) is used for the continuous operation during regenerative driving. The high power factor converter (FR-HC2) can be used also to reduce harmonics, improve power factor, and operate continuously during regenerative driving.
- It is possible to choose between the DC feeding mode 1, which will operate with DC power supply (terminals P and N), and DC feeding mode 2, which will normally operate in AC power supply (terminals R, S, and T) and operate in DC power supply (terminal P and N), such as batteries, at the time of power failure.
- While the power is supplied only to the control circuit, the reset operation when the power is supplied to the main circuit can be selected.

E.H.科技有限公司
購買、維修此手冊零組件
電話： 037-466333
Email: service@repairtw.com
Line id: @ehe
www.repairtw.com

Pr.	Name	Initial value	Setting range	Description
30 E300	Regenerative function selection	0[*1*3], 10[*2]	0, 2, 10, 11, 20, 21, 100 to 102, 110, 111, 120, 121[*1]	Set the applied regeneration unit, the terminal used for power supply, and whether to reset the inverter when the power is supplied to the main circuit.
			2, 10, 11, 102, 110, 111[*2]	
			0, 2, 10, 20, 100, 102, 110, 120[*3]	
599 T721	X10 terminal input selection	0[*1], 1[*2]	0	Normally open input
			1	Normally closed input (NC contact input specification)

*1 The initial value or setting range for the standard model.
*2 The initial value or setting range for the separated converter type.
*3 The initial value or setting range for the IP55 compatible model.

◆ Details of the setting value

- FR-F820-02330(55K) or lower, FR-F840-01160(55K) or lower

Regeneration unit	Power supply terminals of inverter	Pr.30 setting[*1]
Brake unit (FR-BU2 (GZG/GRZG/FR-BR), FR-BU, BU)	R, S, T	0 (initial value), 100
	P, N	10, 110
	R, S, T/P, N	20, 120
High power factor converter (FR-HC2), power regeneration common converter (FR-CV)	P, N	2, 102
For manufacturer setting. Do not set.		1, 11, 21, 101, 111, 121

- FR-F820-03160(75K) or higher and FR-F840-01800(75K) or higher

Regeneration unit	Power supply terminals of inverter	Pr.30 setting[*1]
Without regenerative function	R, S, T	0 (initial value), 100
	P, N	10, 110
	R, S, T/P, N	20, 120
Brake unit (FR-BU2 (MT-BR5))	R, S, T	1, 101
	P, N	11, 111
	R, S, T/P, N	21, 121
Power regeneration converter (MT-RC)	R, S, T	1, 101
High power factor converter (FR-HC2)	P, N	2, 102

- FR-F842-07700(355K) or higher

Regeneration unit	Pr.30 setting[*1]
Without regenerative function (FR-CC2)	10 (initial value), 110
Brake unit (FR-CC2+FR-BU2 (MT-BR5))	11, 111
High power factor converter (FR-HC2)	2, 102

*1 While the power is supplied only to the control circuit with **Pr.30** = "100 or higher", the inverter reset is not performed when the power is supplied to the main circuit.

◆ When using a brake unit (FR-BU2, BU, FR-BU) (FR-F820-02330(55K) or lower, FR-F840-01160(55K) or lower)

- When using the built-in brake, using the FR-BU2 in combination with the GZG/GRZG/FR-BR, or using the BU or FR-BU, set **Pr.30** = "0 (initial value), 10, 20, 100, 110, or 120".

◆ When using a brake unit (FR-BU2) (FR-F820-03160(75K) or higher, FRF840-01800(75K) or higher)

正昇科技有限公司
購買、維修 此手冊零組件
電話： 037-466333
Email: service@repairtw.com
Line id: @zzzz
www.repairtw.com

- To use the FR-BU2 in combination with the MT-BR5, set as follows.
- Set "1, 11, or 21" in **Pr.30**.
- Set the brake unit FR-BU2, **Pr.0 Brake mode selection** = "2".

NOTE

- The stall prevention (overvoltage), oL, does not occur while **Pr.30** = "1, 11, or 21".

◆ When using the power regeneration converter (MT-RC)

- Set "1 or 101" in **Pr.30**.

◆ When using the high power factor converter (FR-HC2), power regeneration common converter (FR-CV), or converter unit (FR-CC2)

- To use the FR-HC2 or HR-CV, set **Pr.30** = "2".
- When using the FR-CC2, set **Pr.30** ="10" (initial value of the separated converter type).
- Use any of **Pr.178 to Pr.189 (Input terminal function assignment)** to assign the following signals to the contact input terminals.

  (a) Inverter run enable (X10) signal: FR-HC2 connection, FR-CV connection, FR-CC2 connection

  To make protective coordination with the FR-HC2, FR-CV, or FR-CC2, use the X10 signal to shut off the inverter output.

  Input the RDY signal of the FR-HC2 (the RDYB signal of FR-CV or the RDA signal of FR-CC2).

  (b) FR-HC2/FR-CC2 connection, instantaneous power failure detection (X11) signal: FR-HC2 connection, FR-CC2 connection

  During the operation using RS-485 communication, with the remote output and analog remote output functions enabled, the X11 signal is used to store the status when the inverter is set to store the status before an instantaneous power failure.

  Input the FR-HC2/FR-CC2 connection, instantaneous power failure detection signal.

- For the terminal used for the X10 or X11 signal, set "10" (X10) or "11" (X11) in any of **Pr.178 to Pr.189** and assign the function. (For the separated converter type, the X10 signal is assigned to terminal MRS in the initial setting.)

NOTE

- For details of the brake unit, high power factor converter (FR-HC2), or power regeneration common converter (FR-CV) connections, refer to page 76. Also, for details of each option, refer to the Instruction Manual of each option.
- Setting **Pr.30** = "2" will reset the inverter, and "Err" is displayed on the operation panel during the reset.

◆ Logic reversing of the Inverter run enable signal (X10 signal, Pr.599)

- Use **Pr.599 X10 terminal input selection** to select the X10 signal input specification between normally open (NO contact) and normally closed (NC contact). With the normally closed (NC contact) input specification, the inverter output is shut off by turning OFF (opening) the X10 signal.
- Changing the inverter logic (NO/NC contact) with the **Pr.599** setting is required according to the logic of the Inverter run enable signal sent from the option unit.
- The response time of the X10 signal is within 2 ms.

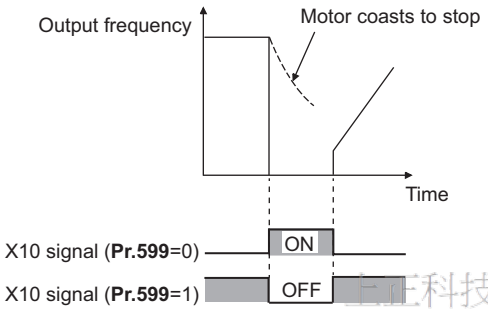

- Relationship between **Pr.599** and the Inverter run enable signal of each option unit

Pr.599 setting	Corresponding signals of the option unit			Operation according to the X10 signal status
	FR-HC2	FR-CV	FR-CC2	
0 (initial value of standard models and IP55 compatible models)	RDY (negative logic) (initial setting)	RDYB	RDB	X10-ON: Inverter output shutoff (NO contact)
1 (initial value of separated converter types)	RDY (positive logic)	RDYA	RDA	X10-OFF: Inverter output shutoff (NC contact)

上正科技有限公司
購買、維修、出租電腦零組件
電話： 07-4083333
Email: service@repairtw.com
Line id: @zzzz
www.repairtw.com

NOTE

- If the X10 signal is unassigned while **Pr.30** = "2" (FR-HC2/FR-CV connection) or "10 or 11" (DC feeding mode 1), the MRS signal can be used as the X10 signal. At this time, logic setting for the signal will follow **Pr.17 MRS input selection**.
- The MRS signal is valid from either of communication or external, but when the MRS signal is to be used as the Inverter run enable (X10) signal, it must be input from external.
- When the FR-HC or MT-HC is connected, set **Pr.599** = "0 (initial value)".
- When the terminal assignment is changed with **Pr.178 to Pr.189 (Input terminal function selection)**, wiring may be mistaken due to different terminal name and signal contents, or may affect other functions. Set parameters after confirming the function of each terminal.

◆ Selection between resetting or not resetting during power supply to main circuit (Pr.30 = "100, 101, 102, 110, 111, 120, or 121")

- Inverter reset is not performed if **Pr.30** = "100" or more, and supplying power to the main circuit (input through terminals R/L1, S/L2, and T/L3) is started when power is supplied only to the control circuit (input through terminals R1/L11 and S1/L12, or 24 V external power supply input).
- When a communication option, etc. is used, communication interruption due to the inverter reset can be avoided.

NOTE

- When supplying power to the main circuit is started while the protective function of the inverter is activated, inverter reset is performed even when "not resetting after power-ON" is selected.

◆ DC feeding mode 1 (Pr.30 = "10 or 11") (standard models and IP55 compatible models)

- For standard models and IP55 compatible models, setting **Pr.30** = "10 or 11" allows operation with a DC power supply.
- Keep the AC power supply connection terminals R/L1, S/L2, and T/L3 open, and connect the DC power supply between terminals P/+ and N/-. Also, for the standard model, remove the jumpers between terminals R/L1 and R1/L11 and between terminals S/L2 and S1/L21, and connect the terminals R1/L11 and S1/L21 to the terminals P/+ and N/- respectively.
- The following diagram shows a connection example.

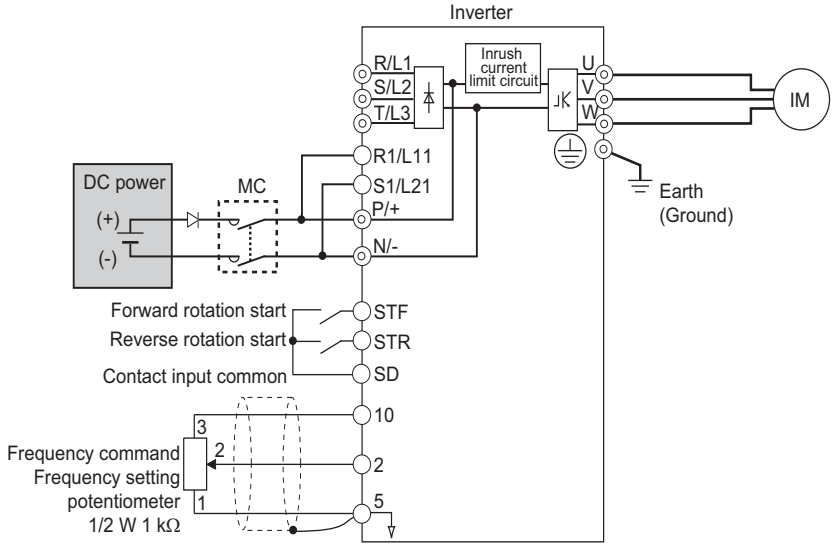

⚠CAUTION

- Do not connect a separated converter type inverter to a DC power supply. Doing so may damage the inverter.

上正科技有限公司
購買、維修伺服電機
電話: 0972465888
Email: service@repairtw.com
Line id: @zzzz
www.repairtw.com

◆ DC feeding mode 2 (Pr.30 = "20 or 21") (standard models and IP55 compatible models)

- When **Pr.30** = "20 or 21", it will normally operate with AC power supply and operate with DC power supply such as batteries at the time of power failure.
- Connect the AC power supply to the AC power supply connecting terminals R/L1, S/L2, and T/L3, and connect the DC power supply to the terminals P/+ and N/-. Also, for the standard model, remove the jumpers between terminals R/L1 and R1/L11 and between terminals S/L2 and S1/L21, and connect the terminals R1/L11 and S1/L21 to the terminals P/+ and N/- respectively.
- Operation with DC current is possible by turning ON the DC feeding operation permission (X70) signal. For details on the I/O signals, refer to following table.

Signal name		Name	Description	Parameter setting
Input	X70	DC feeding operation permission	To operate with DC feeding, turn ON the X70 signal. When the inverter output is shutoff due to power failure, it will be possible to start up 200 ms after turning ON the X70 signal. (Automatic restart after instantaneous power failure can start after the time set in **Pr.57** has elapsed.) When the X70 signal is turned OFF while operating the inverter, output shutoff (**Pr.261** = "0") or deceleration stop (**Pr.261** ≠ "0") will occur.	Set "70" in any of **Pr.178 to Pr.189**.
	X71	DC feeding cancel	Turn ON when stopping the DC feeding. When the X71 signal is turned ON during the operation of the inverter and X70 signal is ON, output shutoff (**Pr.261** = "0") or deceleration stop (**Pr.261** ≠ "0") will occur, and Y85 signal will turn OFF after stopping. After turning ON the X71 signal, operation is not possible even if the X70 signal is turned ON.	Set "71" in any of **Pr.178 to Pr.189**.
Output	Y85	DC current feeding	This signal will turn ON during power failure or undervoltage of the AC power supply. It will turn OFF when the X71 signal turns ON or power restoration. The Y85 signal will not turn OFF even with the power restoration while the inverter is running, but turns OFF after stopping the inverter. When the Y85 signal is turned ON due to undervoltage, the Y85 signal will not turn OFF even when the undervoltage is resolved. The ON/OFF status is maintained when the inverter is reset.	Set "85 (positive logic) or 185 (negative logic)" in any of **Pr.190 to Pr.196**.

- Following is the connection diagram of switching to DC power supply using the power failure detection of the inverter.

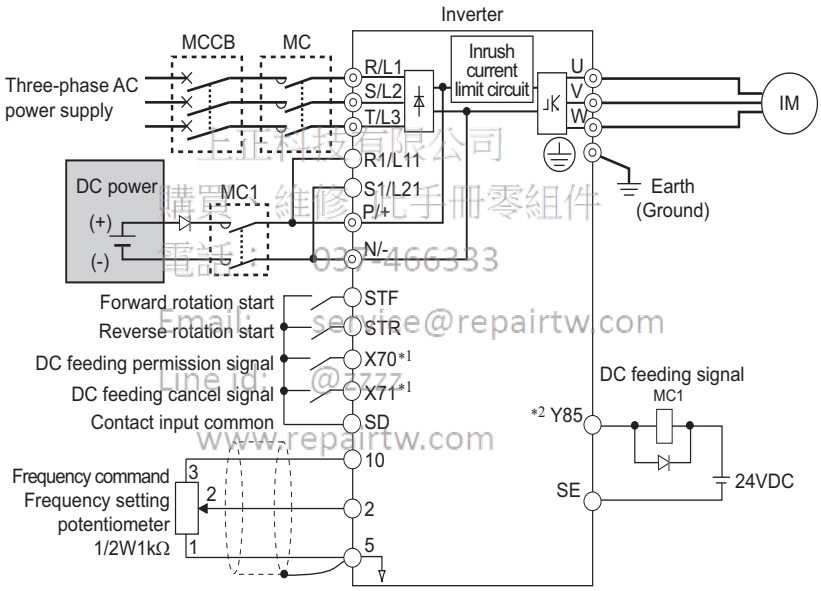

*1 Assign the function using **Pr.178 to Pr.182 (Input terminal function selection)**.

*2 Assign the function using **Pr.190 to Pr.196 (Output terminal function selection)**.

上達科技有限公司
購買、維修、代手冊零組件
電話：03-466333
Email: service@repairtw.com
Line id: @zzz
www.repairtw.com

- Operation example at the time of power failure occurrence 1

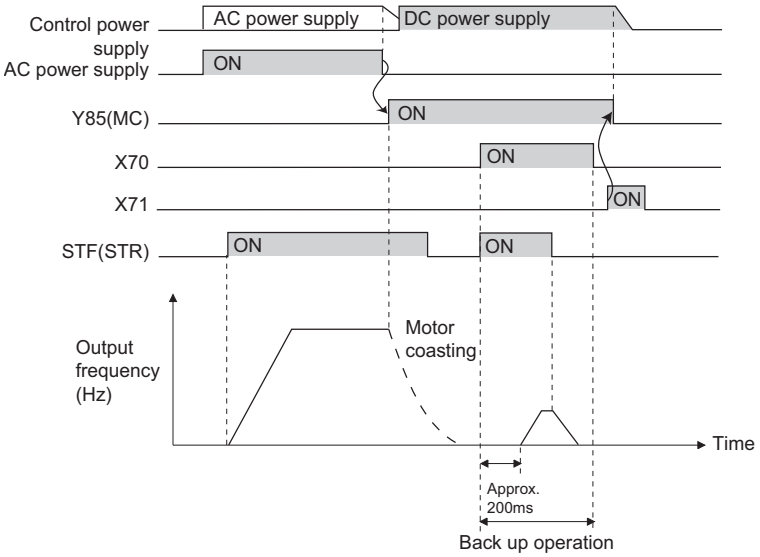

- Operation example at the time of power failure occurrence 2 (when the AC power supply is restored)

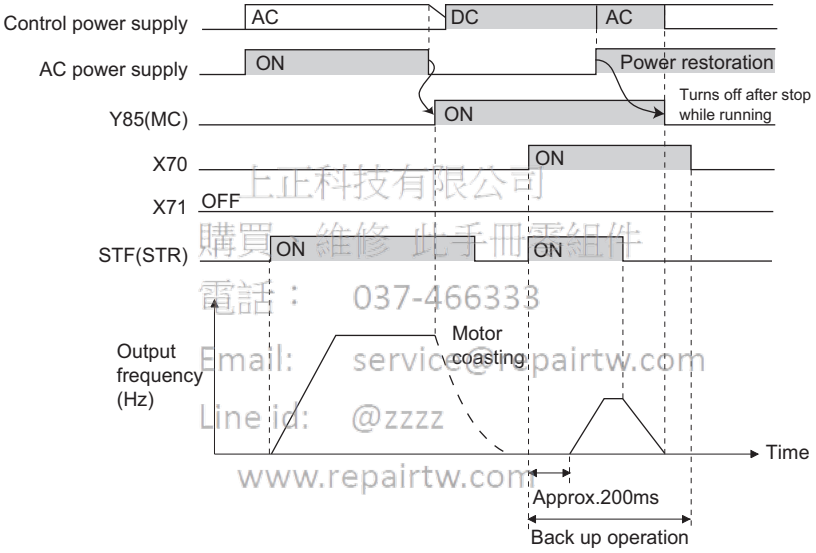

上正科技有限公司
購買 維修 此手冊零組件
電話： 037-466333
Email: service@repairtw.com
Line id: @zzzz
www.repairtw.com

- Operation example at the time of power failure occurrence 3 (when continuing the operation)

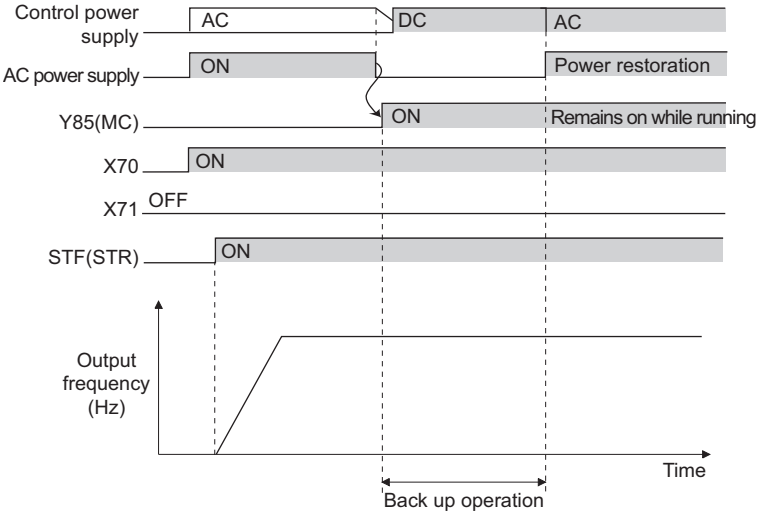

◆ Power supply specification for DC feeding (standard models and IP55 compatible models)

200 V class	Rated input DC voltage	283 to 339 VDC
	Permissible fluctuation	240 to 373 VDC
400 V class	Rated input DC voltage	537 VDC to 707 VDC
	Permissible fluctuation	457 VDC to 777 VDC

NOTE

- The voltage between terminals P and N briefly increases to 415 V (830 V) or higher during the regenerative driving, so take caution on the selection of the DC power supply.
- When an AC power supply is connected to terminals R/L1, S/L2, and T/L3 during DC feeding with **Pr.30** = "2, 10, or 11" (DC feeding), an option fault (E.OPT) will occur.
- When the input voltage is insufficient during inverter operation with **Pr.30** = "2, 10, 11, 20, or 21" (DC deeding), the inverter output will be shut off. (The undervoltage protection function (E.UVT) is not activated.)
- When the inverter is operated with **Pr.30** = "2, 10, 11, 20, or 21" (DC deeding), detection of Instantaneous power failure (E.IPF) is not performed.
- When the DC power is switched ON, an inrush current higher than that for the AC power flows in the inverter. Minimize the number of power-ON events.
- Changing the terminal assignment using **Pr.178 to Pr.189 (Input terminal function selection)** or **Pr.190 to Pr.196 (Output terminal function selection)** may affect the other functions. Set parameters after confirming the function of each terminal.

Parameters referred to

Pr.17 MRS input selection ☞ page 357
Pr.57 Restart coasting time ☞ page 446, page 451
Pr.178 to Pr.189 (Input terminal function selection) ☞ page 355
Pr.190 to Pr.196 (Output terminal function selection) ☞ page 312
Pr.261 Power failure stop selection ☞ page 458

上誠科技有限公司
購買、維修 此手冊零組件
電話： 037-466333
Email: service@repairtw.com
Line id: @zzzz
www.repairtw.com

5.13.12 Regeneration avoidance function

The regenerative status can be detected and avoided by raising the frequency.

- The operation frequency is automatically increased to prevent the regenerative operations. This function is useful when a load is forcibly rotated by another fan in the duct.

Pr.	Name	Initial value		Setting range	Description
882 G120	**Regeneration avoidance operation selection**	0		0	The regeneration avoidance function is disabled.
				1	The regeneration avoidance function is always enabled.
				2	The regeneration avoidance function is enabled only during constant-speed operation.
883 G121	**Regeneration avoidance operation level**	200 V class	380 VDC	300 to 1200 V	Set the bus voltage level to operate the regeneration avoidance operation. When the bus voltage level is set low, it will be harder to generate overvoltage error, but actual deceleration time will be longer. Set the setting value higher than the (power supply voltage × $\sqrt{2}$) value.
		400 V class	760 VDC		
884 G122	**Regeneration avoidance at deceleration detection sensitivity**	0		0	The regeneration avoidance is disabled due to bus voltage change rate.
				1 to 5	Set the sensitivity to detect the bus voltage change rate. Setting value 1 (detection sensitivity: low) to 5 (detection sensitivity: high)
885 G123	**Regeneration avoidance compensation frequency limit value**	6 Hz		0 to 590 Hz	Set the limit value for frequency to rise when the regeneration avoidance function is activated.
				9999	The frequency limit is disabled.
886 G124	**Regeneration avoidance voltage gain**	100%		0 to 200%	Adjust the response during the regeneration avoidance operation. Increasing the setting improves the response to change in the bus voltage. However, the output frequency may become unstable. If setting a smaller value in **Pr.886** does not suppress the vibration, set a smaller value in **Pr.665**.
665 G125	**Regeneration avoidance frequency gain**	100%		0 to 200%	

◆ Regeneration avoidance operation (Pr.882, Pr.883)

- When the regenerative voltage increases, the DC bus voltage will rise, which may cause an overvoltage fault (E.OV[]). The regenerative status can be avoided by detecting this rise of bus voltage, and raising the frequency when the bus voltage level exceeds **Pr.883 Regeneration avoidance operation level**.
- The regeneration avoidance operation can be selected to operate constantly or operate only during constant speed.
- The regeneration avoidance function is enabled by setting "1 or 2" in **Pr.882 Regeneration avoidance operation selection**.

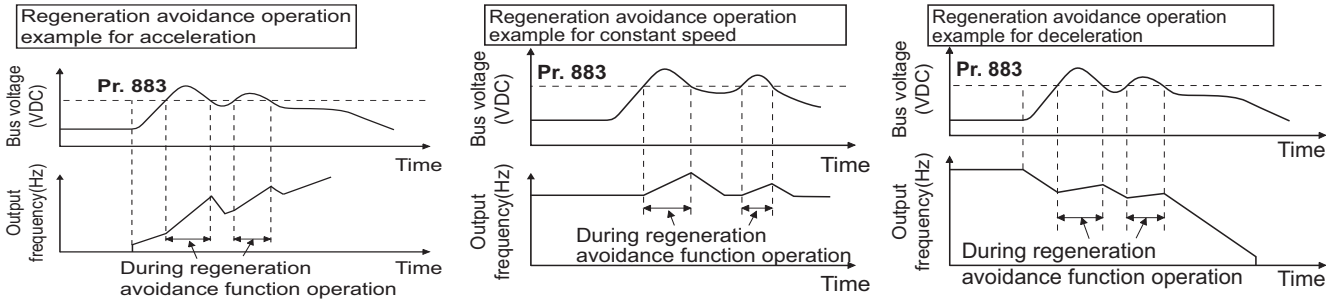

NOTE

- The slope of frequency rising or lowering by the regeneration avoidance operation will change depending on the regenerative status.
- The DC bus voltage of the inverter will be approximately $\sqrt{2}$ times of the normal input voltage.
  The bus voltage is about 311 VDC (622 VDC) when the input voltage is 220 VAC (440 VAC).
  However, it may vary depending on the input power supply waveform.
- Make sure that the setting value of **Pr.883** will not get under DC bus voltage level. The frequency will rise with operation of the regeneration avoidance function even during operation other than the regenerative operation.
- The stall prevention (overvoltage) (oL) will only operate during deceleration, stopping the lowering of output frequency, but on the other hand, the regeneration avoidance function will constantly operate (**Pr.882** = "1") or operate only at constant speed (**Pr.882** = "2"), and raise the frequency depending on the amount of regeneration.
- When the motor becomes unstable due to operation of the stall prevention (overcurrent) (OL) during the regeneration avoidance operation, increase the deceleration time or lower the setting of **Pr.883**.

長沛科技有限公司
購買、維修 此手冊零組件
電話: 03-4200339
Email: service@repairtw.com
Line id: @zzzz
www.repairtw.com

◆ Detecting the regenerative status faster during deceleration (Pr.884)

- Since a rapid change in bus voltage cannot be handled by bus voltage level detection during the regeneration avoidance operation, deceleration is stopped by detecting the change in bus voltage and if it is equal to or lower than **Pr.883 Regeneration avoidance operation level**. Set the detectable bus voltage change rate as the detection sensitivity in **Pr.884 Regeneration avoidance at deceleration detection sensitivity**. A larger set value increases the detection sensitivity.

NOTE

- When the setting value is too small (detection sensitivity is not good), detection will not be possible, and regeneration avoidance will operate even with the bus voltage change caused by a change in the input power.

◆ Limiting the regeneration avoidance operation frequency (Pr.885)

- It is possible to assign a limit to the output frequency corrected (rise) by the regeneration avoidance operation.
- Limit of the frequency is output frequency (frequency before regeneration avoidance operation) + **Pr.885 Regeneration avoidance compensation frequency limit value** for during acceleration and constant speed. During deceleration, when the frequency increases due to the regeneration avoidance operation and exceeds the limit value, the limit value will be retained until the output frequency is reduced to be the half the **Pr.885** setting.
- When the frequency that have increased by the regeneration avoidance operation exceeds **Pr.1 Maximum frequency**, it will be limited to the maximum frequency.
- When **Pr.885** = "9999", the regeneration avoidance compensation frequency limit is disabled.

- Set the frequency around the motor rated slip frequency. Increase the setting value if the overvoltage protection function (E.OV[]) is activated at the start of deceleration.

$$\text{Rated motor slip frequency} = \frac{\text{Synchronized speed at the time of base frequency} - \text{rated rotation speed}}{\text{Synchronized speed at the time of base frequency}} \times \text{Rated motor frequency}$$

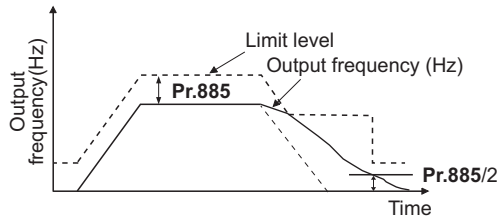

◆ Adjusting the regeneration avoidance operation (Pr.665, Pr.886)

- If the frequency becomes unstable during regeneration avoidance operation, decrease the setting of **Pr.886 Regeneration avoidance voltage gain**. On the other hand, if an overvoltage fault occurs due to a sudden regeneration, increase the setting.
- If setting a smaller value in **Pr.886** does not suppress the vibration, set a smaller value in **Pr.665 Regeneration avoidance frequency gain**.

NOTE

- During the regeneration avoidance operation, the stall prevention (overvoltage) "oL" is displayed and the Overload warning (OL) signal is output. Set the operation pattern at an OL signal output using **Pr.156 Stall prevention operation selection**. Use **Pr.157 OL signal output timer** to set the OL signal output timing.
- The stall prevention is enabled even during regeneration avoidance operation.
- The regeneration avoidance function cannot decrease the actual deceleration time for the motor to stop. Since the actual deceleration time is determined by the regenerative power consumption performance, consider using a regeneration unit (FR-BU2, BU, FR-BU, FR-CV, or FR-HC2) to decrease the deceleration time.
- When using a regeneration unit (FR-BU2, BU, FR-BU, FR-CV, or FR-HC2) to consume the regenerative power at constant speed, set **Pr.882** = "0 (initial value)" to disable the regeneration avoidance function. When consuming the regenerative power at the time of deceleration with the regeneration unit, etc., set **Pr.882** = "2" (enables regeneration avoidance function only at the constant speed).

上川科技有限公司
購買、維修 此手冊零組件
電話： 887-466222
Email: service@repairtw.com
Line id: @zzzz
www.repairtw.com

Parameters referred to

Pr.1 Maximum frequency ☞ page 271
Pr.8 Deceleration time ☞ page 216
Pr.22 Stall prevention operation level ☞ page 273

5.13.13 Increased magnetic excitation deceleration

V/F Magnetic flux

Increase the loss in the motor by increasing the magnetic flux during deceleration. The deceleration time can be reduced by suppressing the stall prevention (overvoltage) (oL).
The deceleration time can further be shortened without a brake resistor.

Pr.	Name	Initial value	Setting range	Description
660 **G130**	**Increased magnetic excitation deceleration operation selection**	0	0	Without the increased magnetic excitation deceleration function
			1	With the increased magnetic excitation deceleration function
661 **G131**	**Magnetic excitation increase rate**	9999	0 to 40%	Set the increase of excitation.
			9999	and Advanced magnetic flux vector control.
662 **G132**	**Increased magnetic excitation current level**	100%	0 to 300%	The increased magnetic excitation rate is automatically lowered when the output current exceeds the setting value during increased magnetic excitation deceleration.

◆ Setting of increased magnetic excitation rate (Pr.660, Pr.661)

- To enable the increased magnetic excitation deceleration, set **Pr.660 Increased magnetic excitation deceleration operation selection** = "1".

- Set the amount of excitation increase in **Pr.661 Magnetic excitation increase rate**. Increased magnetic excitation deceleration will be disabled when **Pr.661** = "0".
- When the DC bus voltage exceeds the increased magnetic excitation deceleration operation level during the deceleration, excitation is increased in accordance with the setting value in **Pr.661**.
- The increased magnetic excitation deceleration will continue even if the DC bus voltage goes under the increased magnetic excitation deceleration operation level during increased magnetic excitation deceleration.

Inverter	Increased magnetic excitation deceleration operation level
200 V class	340 V
400 V class	680 V
With 500 V input	740 V

- When the stall prevention (overvoltage) occurs during the increased magnetic excitation deceleration operation, increase the deceleration time or raise the setting value of **Pr.661**. When the stall prevention (overcurrent) occurs, increase the deceleration time or lower the setting value of **Pr.661**.
- Increased magnetic excitation deceleration is enabled under V/F control and Advanced magnetic flux vector control.

NOTE

- Increased magnetic excitation deceleration will be disabled in the following conditions:
  PM motor control, power failure stop, operation with the FR-HC2/FR-CV, energy saving operation, and Optimum excitation control.

◆ Overcurrent prevention function (Pr.662)

- The overcurrent prevention function is enabled under V/F control and Advanced magnetic flux vector control.
- The increased magnetic excitation rate is lowered automatically when the output current exceeds the level set in **Pr.662** during increased magnetic excitation deceleration.
- When the inverter protective function (E.OC[], E.THT) is activated due to increased magnetic excitation deceleration, adjust the level set in **Pr.662**.
- The overcurrent preventive function is disabled when **Pr.662** = "0".

上正科技有限公司
購買、維修 此手冊零組件
電話: 03-4600333
Email: service@repairtw.com
Line id: @zzzz
www.repairtw.com

NOTE

- When the level set in **Pr.662** is more than the one set in **Pr.22 Stall prevention operation level**, the overcurrent preventive function is activated at the level set in **Pr.22**. (The level set in **Pr.662** is applied when **Pr.22** = "0".)

Parameters referred to

Pr.22 Stall prevention operation level ☞ page 273
Pr.30 Regenerative function selection ☞ page 539
Pr.60 Energy saving control selection ☞ page 532
Pr.162 Automatic restart after instantaneous power failure selection ☞ page 446, page 451
Pr.261 Power failure stop selection ☞ page 458

5.13.14 Slip compensation

V/F

Under V/F control, the slip of the motor is estimated from the inverter output current to maintain the rotation of the motor constant.

Pr.	Name	Initial value	Setting range	Description
245 **G203**	**Rated slip**	9999	0.01 to 50%	Set the rated motor slip.
			0, 9999	No slip compensation
246 **G204**	**Slip compensation time constant**	0.5 s	0.01 to 10 s	Set the response time of the slip compensation. Reducing the value improves the response, but the regenerative overvoltage (E.OV[]) error is more likely to occur with a larger load inertia.
247 **G205**	**Constant output range slip compensation selection**	9999	0	No slip compensation in the constant power range (frequency range higher than the frequency set in **Pr.3**).
			9999	Slip compensation is performed in the constant power range.

- Calculate the rated motor slip and set the value in **Pr.245** to enable slip compensation.
  Slip compensation is not performed when **Pr.245** = "0 or 9999".

$$\text{Rated slip} = \frac{\text{Synchronized speed at the time of base frequency - rated rotation speed}}{\text{Synchronized speed at the time of base frequency}} \times 100\ [\%]$$

NOTE

- When the slip compensation is performed, the output frequency may become larger than the set frequency. Set **Pr.1 Maximum frequency** higher than the set frequency.
- Slip compensation will be disabled in the following conditions:
  Stall prevention (oL, OL) operation, regeneration avoidance operation, auto tuning

Parameters referred to

Pr.1 Maximum frequency ☞ page 271
Pr.3 Base frequency ☞ page 528

5.13.15 Speed smoothing control

V/F

The output current (torque) of the inverter sometimes becomes unstable due to vibration caused by mechanical resonance. Such vibration can be suppressed by reducing fluctuation of the output current (torque) by changing the output frequency.

Pr.	Name	Initial value	Setting range	Description
653 **G410**	**Speed smoothing control**	0%	0 to 200%	Check the effect by increasing and decreasing the value at around 100%.
654 **G411**	**Speed smoothing cutoff frequency**	20 Hz	0 to 120 Hz	Set the minimum frequency for the torque variation cycle.

上正科技有限公司
購買、維修 此手冊零組件
電話： 037-466333
Email: service@repairtw.com
Line id: @zzzz
www.repairtw.com

◆ Control block diagram

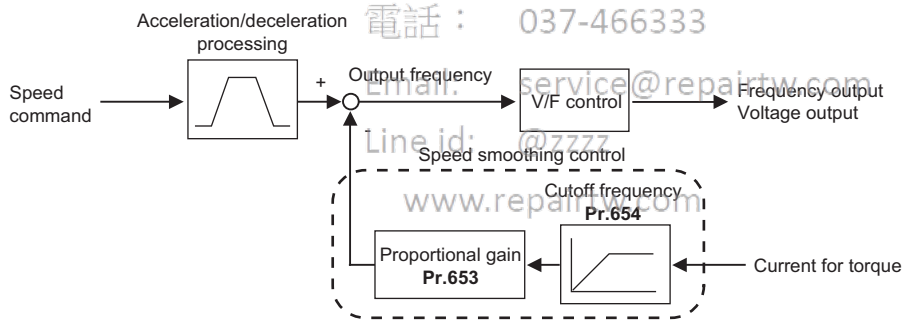

◆ Setting method

- When vibration caused by mechanical resonance occurs, set 100% in **Pr.653 Speed smoothing control**, perform operation at the frequency with the largest vibration, and check if the vibration is suppressed after few seconds.
- If the setting is not effective, gradually increase the value set in **Pr.653** and repeat the operation to check the effect to determine the most effective value (**Pr.653**).
- If the vibration increases by increasing the value in **Pr.653**, decrease the value in **Pr.653** from 100% to check the effect.
- When the vibrational frequency at which mechanical resonance occurs (during fluctuation of torque, speed, or converter output voltage) is measured using an instrument such as a tester, set 1/2 to 1 times of the vibrational frequency in **Pr.654 Speed smoothing cutoff frequency**. (Setting the resonance frequency range mitigates vibration more effectively.)

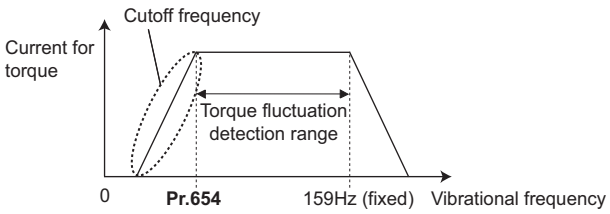

NOTE

- Depending on the equipment, the vibration may not be suppressed sufficiently or the setting is not effective.

上正科技有限公司
購買、維修 此手冊零組件
電話： 037-466333
Email: service@repairtw.com
Line id: @zzzz
www.repairtw.com

5.14 Parameter clear / All parameter clear

Point

- Set "1" to **Pr.CLR Parameter clear** or **ALL.CL All parameter clear** to initialize all parameters. (Parameters cannot be cleared when **Pr.77 Parameter write selection** = "1".)
- Pr.CLR does not clear calibration parameters or the terminal function selection parameters.
- Refer to the parameter list on page 638 for parameters cleared with this operation.

Operating procedure

1. Turning ON the power of the inverter

The operation panel is in the monitor mode.

2. Changing the operation mode

Press [PU/EXT] to choose the PU operation mode. The [PU] indicator turns ON.

3. Selecting the parameter setting mode

Press [MODE] to choose the parameter setting mode. (The parameter number read previously appears.)

4. Selecting the parameter

Turn ⊛ to "Pr.CLR" for Parameter clear or turn it to "ALL.CL" for All parameter clear, and press [SET]. "0 (initial value)" appears.

上正科技有限公司
購買、維修 此手冊零組件
電話： 037-466333
Email: service@repairtw.com
Line id: @zzzz
www.repairtw.com

5. Parameter clear

Turn ⊛ to change the set value to "1". Press [SET] to set. "1" and "Pr.CLR" ("ALL.CL") are displayed alternately after parameters are cleared.

- Turn ⊛ to read another parameter.
- Press [SET] to show the setting again.
- Press [SET] twice to show the next parameter.

Setting	Description	
	Pr.CL Parameter clear	ALLC All parameter clear
0	Initial display (Parameters are not cleared.)	
1	The settings of parameters except for calibration parameters and terminal function selection parameters are initialized.	The settings of all the parameters, including calibration parameters and terminal function selection parameters, are initialized.

NOTE

- "1" and "Er.4" are displayed alternately when the operation mode is other than the PU operation mode.
  1) Press [PU/EXT].
     PU turns ON, and "1" appears on the monitor. (When **Pr.79** ="0" (initial value))
  2) Press [SET] to clear the parameter.
- Stop the inverter first. Writing error occurs if parameter clear is attempted while the inverter is running.
- To clear parameters, the inverter must be in the PU operation mode even if "2" is set to **Pr.77**.
- For availability of the Parameter clear or All parameter clear operation for each parameter, refer to the parameter list on page 638.

5.15 Copying and verifying parameters on the operation panel

Pr.CPY setting value	Description
0.---	Initial display
1.RD	Read the parameters from the source inverter and store them to the operation panel.
2.WR	Write the parameters stored in the operation panel to the target inverter.
3.VFY	Verify parameters in the inverter and operation panel. (Refer to page 554.)

NOTE

- When the copy destination is other than the FR-F800 series or when parameter copy is attempted after the parameter copy reading was stopped, the product series error "rE4" appears.
- Refer to the parameter list on page 638 for the availability of parameter copy.
- When the power is turned OFF or an operation panel is disconnected, etc. during parameter copy writing, write again or check the setting values by parameter verification.
- When parameters are copied from a different-capacity inverter, there are parameters with different initial values depending on the inverter capacity, so the setting values of some parameters will be automatically changed. After performing a parameter copy from a different-capacity inverter, check all the parameter settings. (Refer to the parameter list (page 132) for details of parameters with different initial values depending on individual inverter capacity.)
- While password protection is enabled, parameter copy and parameter verification cannot be performed. (Refer to page 198.)
- If parameters are copied from an older inverter to a newer inverter that has additional parameters, out-of-range setting values may be written in some parameters. In that case, those parameters operate as if they were set to initial values.

上正科技有限公司
購買、維修 此手冊零組件
電話： 037-466333
Email: service@repairtw.com
Line id: @zzzz
www.repairtw.com

5.15.1 Parameter copy

- Inverter parameter settings can be copied to another inverter.

◆ Reading the parameter settings in the inverter and storing them in the operation panel

Operating procedure

1. Connect the operation panel to the source inverter.

2. Selecting the parameter setting mode

Press MODE to choose the parameter setting mode. (The parameter number read previously appears.)

3. Selecting the parameter

Turn ⊛ to "Pr.CPY" (Parameter copy) and press SET.

"0.-- -- --" appears.

4. Reading to and storing in the operation panel

Turn ⊛ to change the set value to "1.Rd". Press SET to start reading the parameter settings by the operation panel. (It takes about 30 seconds to read and store all the settings. During reading, "1.Rd" blinks.)

5. End of reading and storing

"1.Rd" and "Pr.CPY" are displayed alternately after the reading and storing are completed.

NOTE

- "rE1" appears when a parameter read error occurred. Perform the operation from step **3** again.

◆ Writing parameter settings stored in the operation panel to the inverter

Operating procedure

1. Connect the operation panel to the destination inverter.

2. Selecting the parameter setting mode

Press [MODE] to choose the parameter setting mode. (The parameter number read previously appears.)

3. Selecting the parameter

Turn ⊛ to "Pr.CPY" (Parameter copy) and press [SET].

"0.-- -- -- " appears.

4. Selecting parameter write

Turn ⊛ to change the set value to "2.WR", then press [SET].

2. ALL appears.

5. Writing to the inverter

Press [SET] to start writing the parameter settings stored in the operation panel to the inverter. (It takes about 60 seconds to write all the settings. During writing, "2. ALL" blinks.)

● Perform this step while the inverter is stopped. (Parameter settings cannot be copied during operation.)

6. End of copying

"2.WR" and "Pr.CPY" are displayed alternately after copying ends.

7. When parameters are written to the destination inverter, reset the inverter before operation by, for example, turning the power supply OFF.

上正科技有限公司
購買、維修 此手冊零組件
電話： 037-466333
Email: service@repairtw.com
Line id: @2222
www.repairtw.com

NOTE

- "rE2" appears when a parameter write error occurred. Perform the operation from step 3 again.
- "CP" and "0.00" are displayed alternately when parameter copy is performed between the FR-F820-02330(55K) or lower or FR-F840-01800(55K) or lower inverters and the FR-F820-03160(75K) or higher or FR-F840-01800(75K) or higher inverters. When CP and 0.00 are displayed alternately, set **Pr.989 Parameter copy alarm release** as shown below (initial value).

Pr.989 setting	Operation
10	Cancels the warning of FR-F820-02330(55K) or lower and FR-F840-01160(55K) or lower.
100	Cancels the warning of FR-F820-03160(75K) or higher and FR-F840-01800(75K) or higher.

After setting **Pr.989**, perform setting of **Pr.9, Pr.30, Pr.51, Pr.56, Pr.57, Pr.72, Pr.80, Pr.82, Pr.90 to Pr.94, Pr.453, Pr.455, Pr.458 to Pr.462, Pr.557, Pr.859, Pr.860,** and **Pr.893** again.

5.15.2 Parameter verification

- Whether the parameter settings of inverters are the same or not can be checked.

Operating procedure

1. Copy the parameter settings of the verification source inverter to the operation panel according to the procedure on page 552.

2. Detach the operation panel from the source inverter and attach it to the verification target inverter.

3. Turning ON the power of the inverter
The operation panel is in the monitor mode.

4. Selecting the parameter setting mode

Press MODE to choose the parameter setting mode. (The parameter number read previously appears.)

5. Selecting the parameter

Turn to "Pr.CPY" (Parameter copy) and press SET.

"0.-- -- --" appears.

6. Parameter verification

Turn to change to setting value "3.VFY" (Parameter copy verification mode).

Press SET. Verification of the parameter settings copied to the operation panel and the parameter settings of the verification destination inverter is started. (It takes about 60 seconds to verify all the settings. During verification, "3.VFY" blinks.)

● If there are different parameters, the different parameter number and "rE3" are displayed alternately.

● To continue verification, press SET.

7. "Pr.CPY" and "3.VFY" are displayed alternately after verification ends.

上正科技有限公司
購買、維修 此手冊零組件
電話： 037-466333
Email: service@repairtw.com
Line id: @zzzz
www.repairtw.com

NOTE

- When "rE3" blinks, the set frequency may be incorrect. To continue verification, press SET.

5.16 Copying and verifying parameters using a USB memory

- Inverter parameter settings can be copied to a USB memory device.
- Parameter setting data stored in a USB memory device can be copied to another inverter or verified to see if they differ from the parameter settings of another inverter.
- Parameter settings can also be imported to a personal computer and edited in FR Configurator2.

◆ Changes in the USB memory copy operation states

- Insert the USB memory device into the inverter. The USB memory mode is displayed and the USB memory operations are enabled.

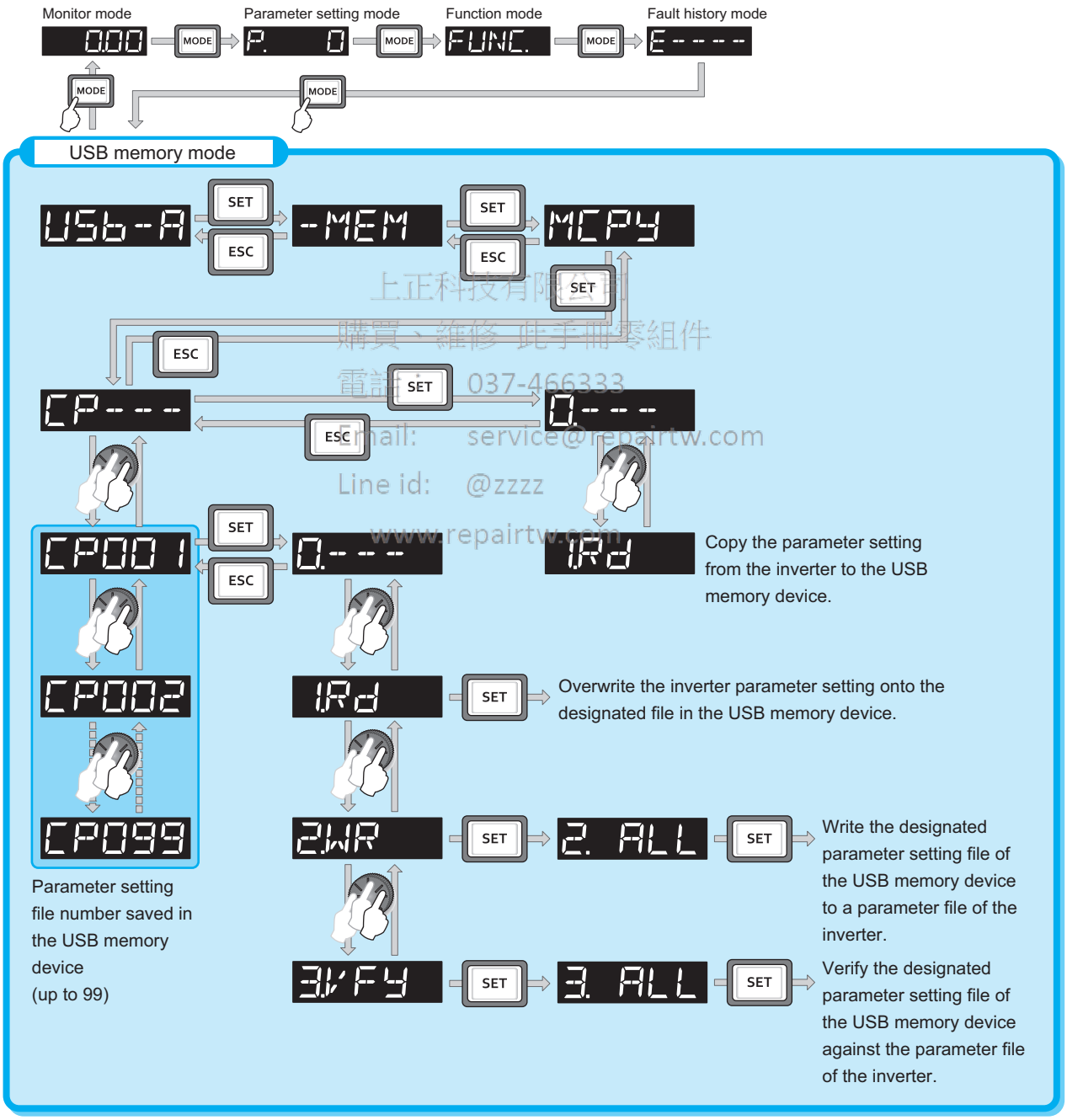

上正科技有限公司
購買、維修 此手冊零組件
電話: 037-466333
Email: service@repairtw.com
Line id: @zzzz
www.repairtw.com

NOTE

- When parameter settings are copied to the USB memory without specifying a parameter setting file number in the USB memory, numbers are automatically assigned.
- Up to 99 files can be saved in the USB memory. When the USB memory already has 99 files, attempting copying of another file to the USB memory causes the file quantity error (rE7).
- Refer to the Instruction Manual of FR Confirurator2 for the details on importing files to FR Configurator2.
- While password protection is enabled, parameter copy and parameter verification cannot be performed. (Refer to page 198.)

◆ Reading the parameter settings in the inverter and storing them in the USB memory

Operating procedure

1. Insert the USB memory device into the copy source inverter.

2. USB memory mode

Press [MODE] to change to the USB memory mode.

3. Displaying the file selection screen

Press [SET] three times to display "CP -- -- --" (file selection screen) and press [SET]. (To overwrite files on the USB memory, display the file selection screen, turn ⊛ to select the file number, and press [SET].)

4. Reading to and storing in the USB memory

Turn ⊛ to change to "1.Rd". Press [SET] to start reading the parameter settings by the USB memory. (It takes about 15 seconds to read and store all the settings. During reading, "1.Rd" blinks.)

"1.Rd" and the file number are displayed alternately after the reading and storing are completed.

上正科技有限公司
購買、維修、此手冊零組件
電話： 037-466333
Line id: @zzzz
www.epanwan.com

◆ Writing parameter settings stored in the USB memory to the inverter

Operating procedure

1. Insert the USB memory device into the destination inverter.

2. USB memory mode

Press [MODE] to change to the USB memory mode.

3. Displaying the file selection screen

Press [SET] three times to display "CP -- -- --" (file selection screen).

4. Selecting the file number

Turn ⊛ to select the file number to copy to the inverter, and press [SET].

5. Turn ⊛ to display "2.WR" and press [SET]. "2. ALL" appears.

6. Writing to the inverter

Press [SET] to start writing the parameter settings stored in the USB memory to the destination inverter. (It takes about 15 seconds to write all the settings. During writing, "2. ALL" blinks.)

"2. ALL" and the file number are displayed alternately after copying ends.

● Perform this step while the inverter is stopped.

7. When parameters are written to the destination inverter, reset the inverter before operation by, for example, turning the power supply OFF.

NOTE

- "rE1" or "rE2" appears when a USB memory device error occurred. Check the connection of the USB memory device and try the operation again.
- "CP" and "0.00" are displayed alternately when parameter copy is performed between the FR-F820-02330(55K) or lower or FR-F840-01160(55K) or lower inverters and the FR-F820-03160(75K) or higher or FR-F840-01800(75K) or higher inverters. When CP and 0.00 are displayed alternately, set **Pr.989 Parameter copy alarm release** as shown below (initial value).

Pr.989 setting	Operation
10	Cancels the warning of FR-F820-02330(55K) or lower and FR-F840-01160(55K) or lower.
100	Cancels the warning of FR-F820-03160(75K) or higher and FR-F840-01800(75K) or higher.

After setting **Pr.989**, perform setting of **Pr.9, Pr.30, Pr.51, Pr.56, Pr.57, Pr.61, Pr.70, Pr.72, Pr.80, Pr.82, Pr.90 to Pr.94, Pr.453, Pr.455, Pr.458 to Pr.462, Pr.557, Pr.859, Pr.860,** and Pr.893 again.

- When the copy destination is other than the FR-F800 series or when parameter copy is attempted after the parameter copy reading was stopped, the model error "rE4" appears.
- Refer to the parameter list on page 638 for the availability of parameter copy.
- When the power is turned OFF or an operation panel is disconnected, etc. during parameter copy writing, write again or check the setting values by parameter verification.
- When parameters are copied from a different-capacity inverter, there are parameters with different initial values depending on the inverter capacity, so the setting values of some parameters will be automatically changed. After performing a parameter copy from a different-capacity inverter, check all the parameter settings. (Refer to the parameter list (page 132) for details of parameters with different initial values depending on individual inverter capacity.)

上正科技有限公司
購買、維修 此手冊零組件
電話： 037-466333
Email: service@repairtw.com
Line id: @zzzz
www.repairtw.com

◆ Procedure for verifying parameters in the USB memory

Operating procedure

1. Copy the parameter settings of the verification source inverter to the USB memory according to the procedure on page 556.

2. Move the USB memory device to the inverter to be verified.

3. Turning ON the power of the inverter
The operation panel is in the monitor mode.

4. USB memory mode

Press [MODE] to change to the USB memory mode.

5. Displaying the file selection screen

Press [SET] three times to display "CP -- -- --" (file selection screen).

6. Selecting the file number

Turn ⊛ to select the file number to be verified, and press [SET].

7. Parameter verification

Turn ⊛ to display the setting "3.VFY" (Parameter copy verification mode), and press [SET].
"3. ALL" appears.

上正科技有限公司
購買、維修 此手冊零組件
電話： 037-466333
Email: service@repairtw.com
Line id: @zzzz
www.repairtw.com

Press [SET] to start verification of the parameter settings copied to the USB memory and the parameter settings of the verification destination inverter. (It takes about 15 seconds to verify all the settings. During verification, "3. ALL" blinks.)

- If there are different parameters, the different parameter number and "r-E3" are displayed alternately.
- To continue verification, press [SET].

8. The verified file number and "3. ALL" are displayed alternately after verification ends.

NOTE

- When "r-E3" blinks, the set frequency may be incorrect. To continue verification, press [SET].

5.17 Checking parameters changed from their initial values (initial value change list)

Parameters changed from their initial values can be displayed.

Operating procedure

1. Turning ON the power of the inverter

The operation panel is in the monitor mode.

2. Selecting the parameter setting mode

Press [MODE] to choose the parameter setting mode. (The parameter number read previously appears.)

3. Selecting a parameter

Turn ⊛ to "Pr-CHG" (Initial value change list), and press [SET].

"P.-- -- -- --" appears.

4. Checking the Initial value change list

Turn ⊛. The parameter numbers that have been changed from their initial value appear in order.

● When [SET] is pressed with a changed parameter displayed, the parameter settings can be changed as they are. (Parameter numbers are no longer displayed in the list when they are returned to their initial values.)

Other changed parameters appear by turning ⊛.

● The indication returns to "P.-- -- -- --" when the last changed parameter is displayed.

上立科技有限公司
購買、維修、批手冊零組件
電話： 037-466333
Email: service@repairtw.com
Line id: @zzzz
www.repairtw.com

NOTE

- The calibration parameters **(C0 (Pr.900) to C7 (Pr.905), C42 (Pr.934) to C45 (Pr.935))** are not displayed even when these are changed from the initial settings.
- Only the simple mode parameters are displayed when the simple mode is set (**Pr.160** ="9999").
- Only user groups are displayed when user groups are set (**Pr.160** = "1").
- **Pr.160** is displayed independently of whether the setting value is changed or not.
- Parameter setting using the Initial value change list is also possible.

MEMO

上正科技有限公司
購買、維修 此手冊零組件
電話： 037-466333
Email: service@repairtw.com
Line id: @zzzz
www.repairtw.com

CHAPTER 6 PROTECTIVE FUNCTIONS

6.1 Inverter fault and alarm indications 562
6.2 Reset method for the protective functions 563
6.3 Check and clear of the fault history 564
6.4 List of fault displays 566
6.5 Causes and corrective actions 568
6.6 Check first when you have a trouble 585

上正科技有限公司
購買、維修 此手冊零組件
電話： 037-466333
Email: service@repairtw.com
Line id: @zzzz
www.repairtw.com

6 PROTECTIVE FUNCTIONS

This chapter explains the "PROTECTIVE FUNCTIONS" that operate in this product.
Always read the instructions before use.

6.1 Inverter fault and alarm indications

- When the inverter detects a fault, depending on the nature of the fault, the operation panel displays an error message or warning, or a protective function is activated to shut off the inverter output.
- When any fault occurs, take an appropriate corrective action, then reset the inverter, and resume the operation. Restarting the operation without a reset may break or damage the inverter.
- When a protective function is activated, note the following points.

Item	Description
Fault output signal	Opening the magnetic contactor (MC) provided on the input side of the inverter at a fault occurrence shuts off the control power to the inverter, therefore, the fault output will not be retained.
Fault or alarm indication	When a protective function is activated, the operation panel displays a fault indication.
Operation restart method	While a protective function is activated, the inverter output is kept shutoff. Reset the inverter to restart the operation.

- Inverter fault or alarm indications are categorized as follows.

Displayed item	Description
Error message	A message regarding operational fault and setting fault by the operation panel and the parameter unit. The inverter output is not shut off.
Warning	The inverter output is not shut off even when a warning is displayed. However, failure to take appropriate measures will lead to a fault.
Alarm	The inverter output is not shut off. An Alarm (LF) signal can also be output with a parameter setting.
Fault	When a protective function is activated, the inverter output is shut off and a Fault (ALM) signal is output.

昇達科技有限公司
購買 / 維修 此手冊零組件
電話 : 03-4663333
Email: service@repairtw.com
Line Id: @92222
www.repairtw.com

NOTE

- The past eight faults can be displayed on the operation panel. (Fault history) (For the operation, refer to page 564.)

6.2 Reset method for the protective functions

Reset the inverter by performing any of the following operations. Note that the accumulated heat value of the electronic thermal relay function and the number of retries are cleared (erased) by resetting the inverter.
The inverter recovers about 1 second after the reset is released.

- On the operation panel, press STOP RESET to reset the inverter. (This operation is valid only when a protective function for a fault is activated. (Refer to page 574 of the Instruction Manual for faults.))

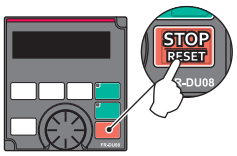

- Switch the power OFF once, then switch it ON again.

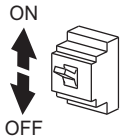

- Turn ON the Reset (RES) signal for 0.1 s or more. (If the RES signal is kept ON, "Err" appears (blinks) to indicate that the inverter is in a reset status.)

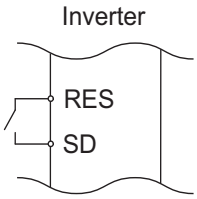

上正科技有限公司
購買、維修 此手冊零組件
電話： 037-466333
Email: service@repairtw.com
Line id: @zzzz
www.repairtw.com

NOTE

- OFF status of the start signal must be confirmed before resetting the inverter fault. Resetting an inverter fault with the start signal ON restarts the motor suddenly.

6.3 Check and clear of the fault history

The operation panel stores the fault indications which appear when a protective function is activated to display the fault record for the past eight faults. (Fault history)

◆ Check for the fault history

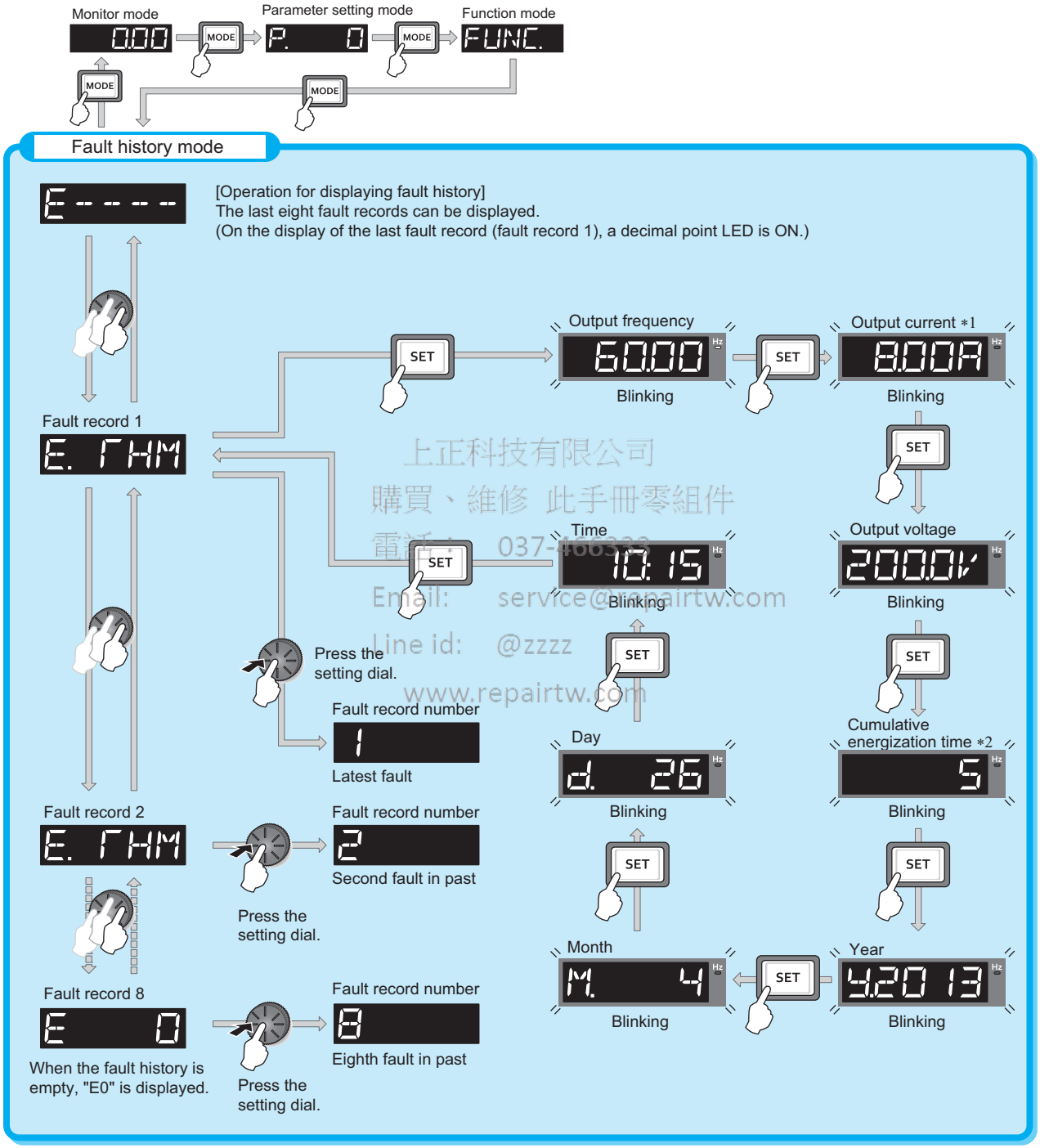

上正科技有限公司
購買、維修 此手冊零組件
電話： 037-466333
Email: service@repairtw.com
Line id: @zzzz
www.repairtw.com

*1 When an overcurrent trip occurs by an instantaneous overcurrent, the monitored current value saved in the fault history may be lower than the actual current that has flowed.

*2 The cumulative energization time and actual operation time are accumulated from 0 to 65535 hours, then cleared, and accumulated again from 0.

◆ Fault history clearing procedure

Point

- Set **Err.CL Fault history clear** = "1" to clear the fault history.

Operating procedure

1. Turning ON the power of the inverter

The operation panel is in the monitor mode.

2. Selecting the parameter setting mode

Press [MODE] to choose the parameter setting mode. (The parameter number read previously appears.)

3. Selecting the parameter number

Turn ⊛ until "Err.CL" (Fault history clear) appears. Press [SET] to read the present set value. "0" (initial value) appears.

4. Fault history clear

Turn ⊛ to change the set value to "1". Press [SET] to start clearing.

"1" and "Err.CL" are displayed alternately after parameters are cleared.

- Turn ⊛ to read another parameter.
- Press [SET] to show the setting again.
- Press [SET] twice to show the next parameter.

上正科技有限公司
購買・維修 此手冊零組件
電話： 037-466333
Email: service@repairtw.com
Line id: @zzzz
www.repairtw.com

6.4 List of fault displays

If the displayed message does not correspond to any of the following or if you have any other problem, contact your sales representative.

◆ Error message

- A message regarding operational fault and setting fault by the operation panel and the parameter unit is displayed. The inverter output is not shut off.

Operation panel indication	Name	Refer to page
HOLd	Operation panel lock	568
LOCd	Password locked	568
Er 1 to Er4 Er8	Parameter write error	568, 569
rE 1 to rE4 rE6 to rE8	Copy operation fault	569, 570
Err.	Error	570

◆ Warning

- The inverter output is not shut off even when a warning is displayed. However, failure to take appropriate measures will lead to a fault.

Operation panel indication	Name	Refer to page
OL	Stall prevention (overcurrent)	571
oL	Stall prevention (overvoltage)	571
TH	Electronic thermal relay function pre-alarm	571
PS	PU stop	572
CP	Parameter copy	572
SA	Safety stop	572
MT 1 to MT3	Maintenance signal output	572
UF	USB host error	572
Ed	Emergency drive in operation	573
CF	Continuous operation during communication fault	573
LdF	Load fault warning	573

◆ Alarm

- The inverter output is not shut off. An Alarm (LF) signal can also be output with a parameter setting.

Operation panel indication	Name	Refer to page
FN	Fan alarm	573
FN2	Internal fan alarm	573

◆ Fault

- When a protective function is activated, the inverter output is shut off and a Fault (ALM) signal is output.
- The data code is used for checking the fault detail via communication or with **Pr.997 Fault initiation**.

■ Data code 16 to 199

Operation panel indication	Name	Data code	Refer to page
E. OC1	Overcurrent trip during acceleration	16 (H10)	574
E. OC2	Overcurrent trip during constant speed	17 (H11)	574
E. OC3	Overcurrent trip during deceleration or stop	18 (H12)	575
E. OV1	Regenerative overvoltage trip during acceleration	32 (H20)	575
E. OV2	Regenerative overvoltage trip during constant speed	33 (H21)	575
E. OV3	Regenerative overvoltage trip during deceleration or	34 (H22)	576
E. THT	Inverter overload trip (electronic thermal relay	48 (H30)	576
E. THM	Motor overload trip (electronic thermal relay	49 (H31)	576
E. FIN	Heatsink overheat	64 (H40)	576
E. IPF	Instantaneous power failure	80 (H50)	577
E. UVT	Undervoltage	81 (H51)	577
E. ILF	Input phase loss	82 (H52)	577
E. OLT	Stall prevention stop	96 (H60)	578
E. SOT	Loss of synchronism detection	97 (H61)	578
E. LUP	Upper limit fault detection	98 (H62)	578
E. LdN	Lower limit fault detection	99 (H63)	578
E. bE	Internal circuit fault	112 (H70)	582
E. GF	Output side earth (ground) fault overcurrent	128 (H80)	579
E. LF	Output phase loss	129 (H81)	579

上正科技有限公司
購買、維修 歡迎詢問
電話：037-466338
Email: service@repairtw.com
Line id: @zzzz
www.repairtw.com

Operation panel indication	Name	Data code	Refer to page
E. OHT	External thermal relay operation	144 (H90)	579
E. PTC	PTC thermistor operation	145 (H91)	579
E. OPT	Option fault	160 (HA0)	579
E. OP1	Communication option fault	161 (HA1)	580
E. 16	User definition error by the PLC function	164 (HA4)	580
E. 17		165 (HA5)	
E. 18		166 (HA6)	
E. 19		167 (HA7)	
E. 20		168 (HA8)	
E. PE	Parameter storage device fault	176 (HB0)	580
E. PUE	PU disconnection	177 (HB1)	580
E. RET	Retry count excess	178 (HB2)	580
E. PE2	Parameter storage device fault	179 (HB3)	580
E. CPU	CPU fault	192 (HC0)	581
E. CTE	Operation panel power supply short circuit/RS-	193 (HC1)	581
E. P24	24 VDC power fault	194 (HC2)	581
E. CdO	Abnormal output current detection	196 (HC4)	581
E. IOH	Inrush current limit circuit fault	197 (HC5)	581
E. SER	Communication fault (inverter)	198 (HC6)	582
E. AIE	Analog input fault	199 (HC7)	582

■ Data code 200 or more

Operation panel indication	Name	Data code	Refer to page
E. USb	USB communication fault	200 (HC8)	582
E. SAF	Safety circuit fault	201 (HC9)	582
E. PbT	Internal circuit fault	202 (HCA)	582
E. 13		253 (HFD)	
E. OS	Overspeed occurrence	208 (HD0)	582
E. IAH	Abnormal internal temperature	225 (HE1)	583
E. LCI	4 mA input fault	228 (HE4)	583
E. PCH	Pre-charge fault	229 (HE5)	583
E. PId	PID signal fault	230 (HE6)	583
E. 1	Option fault	241 (HF1)	584
E. 2		242 (HF2)	
E. 3		243 (HF3)	
E. 5	CPU fault	245 (HF5)	581
E. 6		246 (HF6)	
E. 7		247 (HF7)	

◆ Others

- The fault history and the operation status of the inverter are displayed. It is not a fault indication.

Operation panel indication	Name	Refer to page
E -- -- -- --	Fault history	564
E. 0	No fault history	584
EV	24 V external power supply operation	584
Rd	Backup in progress	584
WR	Restoration in progress	584

If faults other than the above appear, contact your sales representative.

JCF科技有限公司
購買、維修 此手冊零組件
電話: 037-466333
Email: service@repairtw.com
Line id: @zzzz
www.repairtw.com

6.5 Causes and corrective actions

◆ Error message

A message regarding operational troubles is displayed. Output is not shut off.

Operation panel indication	HOLD	HOLd
Name	Operation panel lock	
Description	Operation lock is set. Operation other than STOP RESET is invalid. (Refer to page 192.)	
Check point	----------	
Corrective action	Press MODE for 2 s to release the lock.	

Operation panel indication	LOCD	LOCd
Name	Password locked	
Description	Password function is active. Display and setting of parameters are restricted.	
Check point	----------	
Corrective action	Enter the password in **Pr.297 Password lock/unlock** to unlock the password function before operating. (Refer to page 198.)	

Operation panel indication	Er1	Er 1
Name	Write disable error	
Description	• Parameter setting was attempted while **Pr.77 Parameter write selection** is set to disable parameter write. • Overlapping range has been set for the frequency jump. • Overlapping range has been set for the adjustable 5 points V/F. • The PU and inverter cannot make normal communication. • IPM parameter initialization was attempted while **Pr.72 PWM frequency selection** = "25".	
Check point	• Check the **Pr.77** setting. (Refer to page 196.) • Check the settings of **Pr.31 to Pr.36 (frequency jump)**. (Refer to page 272.) • Check the settings of **Pr.100 to Pr.109 (adjustable 5 points V/F)**. (Refer to page 533.) • Check the connection of PU and the inverter. • Check the **Pr.72** setting. A sine wave filter cannot be used under PM motor control.	

上正科技有限公司
購買、維修、出租、批發組件
電話： 037-466222
E-mail: service@repairtw.com
Line Id: @2222
www.repairtw.com

Operation panel indication	Er2	Er2
Name	Write error during operation	
Description	Parameter write was attempted while **Pr.77 Parameter write selection** = "0".	
Check point	• Check that the inverter is stopped.	
Corrective action	• After stopping the operation, make parameter setting. • When setting **Pr.77** = "2", parameter write is enabled during operation. (Refer to page 196.)	

Operation panel indication	Er3	Er3
Name	Calibration error	
Description	Analog input bias and gain calibration values have been set too close.	
Check point	Check the settings of the **calibration parameters C3, C4, C6, and C7** (calibration functions). (Refer to page 339.)	

Operation panel indication	Er4	Er4
Name	Mode designation error	
Description	• Parameter setting was attempted in the External or NET operation mode while **Pr.77 Parameter write selection** = "1". • Parameter write was attempted when the command source is not at the operation panel (FR-DU08).	
Check point	• Check that the operation mode is the PU operation mode. • Check that the **Pr.551 PU mode operation command source selection** setting is correct.	
Corrective action	• After setting the operation mode to the "PU operation mode", make parameter setting. (Refer to page 228.) • When **Pr.77** = "2", parameter write is enabled regardless of the operation mode. (Refer to page 196.) • Set **Pr.551** = "2". (Refer to page 239.)	

Operation panel indication	Er8	Er8
Name	USB memory device operation error	
Description	• An operation command was given during the USB memory device operation. • A copy operation (writing) was performed while the PLC function was in the RUN state. • A copy operation was attempted for a password locked project.	
Check point	• Check if the USB memory device is operating. • Check if the PLC function is in the RUN state. • Check if the project data is locked with a password.	
Corrective action	• Perform the operation after the USB memory device operation is completed. • Stop the PLC function. (Refer to page 462 and the PLC function programming manual.) • Unlock the password of the project data using FR Configurator2. (Refer to the Instruction Manuals of FR Configurator2 and GX Works2.)	

Operation panel indication	rE1	rE1
Name	Parameter read error	
Description	• A failure has occurred at the operation panel side EEPROM while reading the copied parameters. • A failure has occurred in the USB memory device while copying the parameters or reading the PLC function project data.	
Check point	• ----------	
Corrective action	• Perform parameter copy again. (Refer to page 552 and page 555.) • Perform PLC function project data copy again. (Refer to page 462.) • The USB memory device may be faulty. Replace the USB memory device. • The operation panel (FR-DU08) may be faulty. Contact your sales representative.	

Operation panel indication	rE2	rE2
Name	Parameter write error	
Description	• Parameter copy from the operation panel to the inverter was attempted during operation. • A failure has occurred at the operation panel side EEPROM while writing the copied parameters. • A failure has occurred in the USB memory device while writing the copied parameters or PLC function project data.	
Check point	• Check that the inverter is stopped.	
Corrective action	• After stopping the operation, perform parameter copy again. (Refer to page 552.) • The operation panel (FR-DU08) may be faulty. Contact your sales representative. • Perform parameter copy or PLC project data copy again. (Refer to page 462 and page 555.) • The USB memory device may be faulty. Replace the USB memory device.	

上正科技有限公司
購買、維修此產品請洽詢
電話： 037-466333
Email： service@repairtw.com
Line ID： @2442
www.repairtw.com

Operation panel indication	rE3	rE3
Name	Parameter verification error	
Description	• The data in the inverter are different from the data in the operation panel. • A failure has occurred at the operation panel side EEPROM during parameter verification. • A failure has occurred in the USB memory device during parameter verification. • The data in the inverter are different from the data in the USB memory device or the personal computer (FR Configurator2).	
Check point	• Check the parameter setting of the source inverter against the setting of the destination inverter.	
Corrective action	• Continue the verification by pressing SET. • Perform parameter verification again. (Refer to page 554.) • The operation panel (FR-DU08) may be faulty. Contact your sales representative. • The USB memory device may be faulty. Replace the USB memory device. • Verify the PLC function project data again. (Refer to page 462.)	

Operation panel indication	rE4	rE4
Name	Model error	
Description	• A different model was used when parameter copy from the operation panel or parameter verification was performed. • The data in the operation panel were not correct when parameter copy from the operation panel or parameter verification was performed.	
Check point	• Check that the parameter copy or verification source inverter is of the same model. • Check that parameter copy to the operation panel was not interrupted by switching OFF the power or by disconnecting the operation panel.	
Corrective action	• Perform parameter copy and parameter verification between inverters of the same model (FR-F800 series). • Perform parameter copy to the operation panel from the inverter again.	

Operation panel indication	rE6	rE6
Name	File error	
Description	• The parameter copy file in the USB memory device cannot be recognized. • An error has occurred in the file system during transfer of the PLC function data or writing to RAM.	
Check point	• ----------	
Corrective action	• Perform parameter copy again. (Refer to page 555.) • Copy the PLC function project data again. (Refer to page 462.)	

Operation panel indication	rE7	rE7
Name	File quantity error	
Description	• A parameter copy was attempted to the USB memory device in which the copy files from 001 to 099 had already been saved.	
Check point	• Check if the number of copy files in the USB memory device has reached 99.	
Corrective action	• Delete the copy file in the USB memory device and perform parameter copy again. (Refer to page 555.)	

上禾科技有限公司
購買、維修 此手冊零組件
電話： 037-466333
email: service@repairtw.com
Line Id: @2222
www.repairtw.com

Operation panel indication	rE8	rE8
Name	No PLC function project file	
Description	The specified PLC function project file does not exist in the USB memory device.	
Check point	• Check that the file exists in the USB memory device. • Check that the folder name and the file name in the USB memory device is correct.	
Corrective action	The data in the USB memory device may be damaged.	

Operation panel indication	Err.	Err.
Description	• The RES signal is turned ON. • The operation panel and inverter cannot make normal communication (contact faults of the connector). • This error may occur when the voltage at the input side of the inverter drops. • When using a separate power source for the control circuit power (R1/L11, S1/L21) from the main circuit power (R/L1, S/L2, T/L3), this error may appear at turning ON of the main circuit. It is not a fault.	
Corrective action	• Turn OFF the RES signal. • Check the connection between the operation panel and the inverter. • Check the voltage on the input side of the inverter.	

◆ Warning

Output is not shut off when a protective function is activated.

Operation panel indication	OL	OL	FR-LU08 indication	OL
Name	Stall prevention (overcurrent)			
Description	• When the output current of the inverter increases, the stall prevention (overcurrent) function is activated. • The following section explains about the stall prevention (overcurrent) function.			
	During acceleration	When the inverter output current exceeds the stall prevention level (**Pr.22 Stall prevention operation level**, etc.), this function stops the increase in frequency until the overload current decreases to prevent the inverter from resulting in overcurrent trip. When the overload current is reduced below stall prevention operation level, this function increases the frequency again.		
	During constant-speed operation	When the inverter output current exceeds the stall prevention level (**Pr.22 Stall prevention operation level**, etc.), this function decreases the frequency until the overload current decreases to prevent the inverter from resulting in overcurrent trip. When the overload current is reduced below stall prevention operation level, this function increases the frequency up to the set value.		
	During deceleration	When the inverter output current exceeds the stall prevention level (**Pr.22 Stall prevention operation level**, etc.), this function stops the decrease in frequency until the overload current decreases to prevent the inverter from resulting in overcurrent trip. When the overload current is reduced below stall prevention operation level, this function decreases the frequency again.		
Check point	• Check that the **Pr.0 Torque boost** setting is not too large. • The **Pr.7 Acceleration time** and **Pr.8 Deceleration time** settings may be too short. • Check that the load is not too heavy. • Check for any failures in peripheral devices. • Check that the **Pr.13 Starting frequency** is not too large. • Check that **Pr.22 Stall prevention operation level** is appropriate.			
Corrective action	• Gradually increase or decrease the **Pr.0** setting by 1% at a time and check the motor status. (Refer to page 527.) • Set a larger value in **Pr.7** and **Pr.8**. (Refer to page 216.) • Reduce the load. • Try Advanced magnetic flux vector control. • Change the **Pr.14 Load pattern selection** setting. • The stall prevention operation current can be set in **Pr.22 Stall prevention operation level**. The acceleration/deceleration time may change. Increase the stall prevention operation level with **Pr.22 Stall prevention operation level**, or disable stall prevention with **Pr.156 Stall prevention operation selection**. (Use **Pr.156** to set either operation continued or not at OL operation.)			

上正科技有限公司
購買、維修 此手冊零組件
電話：0572-896333
Email：service@repairtw.com
Line ID：@rtw
www.repairtw.com

Operation panel indication	oL	oL	FR-LU08 indication	oL
Name	Stall prevention (overvoltage)			
Description	• When the output voltage of the inverter increases, the stall prevention (overvoltage) function is activated. • The regeneration avoidance function is activated due to excessive regenerative power of the motor. (Refer to page 545.) • The following section explains the stall prevention (overvoltage) function.			
	During deceleration	If the regenerative power of the motor becomes excessive to exceed the regenerative power consumption capability, this function stops decreasing the frequency to prevent overvoltage trip. As soon as the regenerative power has reduced, deceleration resumes.		
Check point	• Check for sudden speed reduction. • Check if the regeneration avoidance function (**Pr.882 to Pr.886**) is being used. (Refer to page 545.)			
Corrective action	The deceleration time may change. Increase the deceleration time using **Pr.8 Deceleration time**.			

Operation panel indication	TH	TH	FR-LU08 indication	TH
Name	Electronic thermal relay function pre-alarm			
Description	Appears if the cumulative value of the electronic thermal O/L relay reaches or exceeds 85% of the preset level of **Pr.9 Electronic thermal O/L relay**. If the specified value is reached, the protection circuit is activated to shut off the inverter output.			
Check point	• Check for large load or sudden acceleration. • Check that the **Pr.9** setting is appropriate. (Refer to page 252.)			
Corrective action	• Reduce the load and frequency of operation. • Set an appropriate value in **Pr.9**. (Refer to page 252.)			

Operation panel indication	PS	PS	FR-LU08 indication	PS
Name	PU stop			
Description	• The motor is stopped using STOP RESET under the mode other than the PU operation mode. (To enable STOP RESET under the mode other than the PU operation mode, set **Pr.75 Reset selection/disconnected PU detection/ PU stop selection**. Refer to page 188 for details.)			
Check point	• Check for a stop made by pressing STOP RESET of the operation panel.			
Corrective action	• Turn the start signal OFF and release with PU EXT.			

Operation panel indication	CP	CP	FR-LU08 indication	CP
Name	Parameter copy			
Description	Appears when Parameter copy is performed between the FR-F820-02330(55K) or lower / FR-F840-01160(55K) or lower inverters and the FR-F820-03160(75K) or higher / FR-F840-01800(75K) or higher inverters.			
Check point	Resetting of **Pr.9, Pr.30, Pr.51, Pr.56, Pr.57, Pr.72, Pr.80, Pr.82, Pr.90 to Pr.94, Pr.453, Pr.455, Pr.458 to Pr.462, Pr.557, Pr.859, Pr.860, and Pr.893** is necessary.			
Corrective action	Set the initial value in **Pr.989 Parameter copy alarm release**.			

Operation panel indication	SA	SA	FR-LU08 indication	—
Name	Safety stop			
Description	Appears when safety stop function is activated (during output shutoff). (Refer to page 70.)			
Check point	• Check if an emergency stop device is activated. • Check if the shorting wire between S1 and PC or between S2 and PC is disconnected when not using the safety stop function.			
Corrective action	• An emergency stop device is active when using the safety stop function. Identify the cause of emergency stop, ensure the safety and restart the system. • When not using the safety stop function, short across terminals S1 and PC and across S2 and PC with shorting wire for the inverter to run. • If "SA" is indicated when wires across S1 and SIC and across S2 and SIC are both conducted while using the safety stop function (drive enabled), internal failure might be the cause. Check the wiring of terminals S1, S2, and SIC and contact your sales representative if the wiring has no fault.			

上正科技有限公司
購買、維修、比手冊零組件
電話： 037-466333
Email: service@repairtw.com
Line id: @zzzz
www.repairtw.com

Operation panel indication	MT1 to MT3	MT1 to MT3	FR-LU08 indication	MT1 to MT3
Name	Maintenance signal output			
Description	Appears when the inverter's cumulative energization time reaches or exceeds the parameter set value. Set the time until the MT is displayed using **Pr.504 Maintenance timer 1 warning output set time** (MT1), **Pr.687 Maintenance timer 2 warning output set time** (MT2), and **Pr.689 Maintenance timer 3 warning output set time** (MT3). MT does not appear when the settings of **Pr.504**, **Pr.687**, and **Pr.689** are initial values (9999).			
Check point	The set time of maintenance timer has been exceeded. (Refer to page 212.)			
Corrective action	Take appropriate countermeasures according to the purpose of the maintenance timer setting. Setting "0" in **Pr.503 Maintenance timer 1**, **Pr.686 Maintenance timer 2**, and **Pr.688 Maintenance timer 3** clears the indication.			

Operation panel indication	UF	UF	FR-LU08 indication	UF
Name	USB host error			
Description	Appears when an excessive current flows into the USB A connector.			
Check point	Check if a USB device other than a USB memory device is connected to the USB A connector.			
Corrective action	• If a device other than a USB memory device is connected to the USB A connector, remove the device. • Setting **Pr.1049 USB host reset** = "1" or inverter reset clears the UF indication.			

Operation panel indication	CF	CF	FR-LU08 indication	CF
Name	Continuous operation during communication fault			
Description	Appears when the operation continues while an error is occurring in the communication line or communication option (when **Pr.502** = "4").			
Check point	• Check for a break in the communication cable. • Check for communication option faults.			
Corrective action	• Check the connection of communication cable. • Replace the communication option.			

Operation panel indication	ED	Ed	FR-LU08 indication	ED
Name	Emergency drive in operation			
Description	Appears during emergency drive operation.			
Check point	• Emergency drive operation is performed by turning ON the X84 signal.			
Corrective action	• The display is cleared when the emergency drive operation ends. (Refer to page 263.)			

Operation panel indication	LDF	LdF	FR-LU08 indication	LDF
Name	Load fault warning			
Description	Appears when the load is deviated from the detection width set in **Pr.1488 Upper limit warning detection width** or **Pr.1489 Lower limit warning detection width**.			
Check point	• Check if too much load is applied to the equipment, or if the load is too light. • Check that the load characteristics settings are correct.			
Corrective action	• Inspect the equipment. • Set the load characteristics (**Pr.1481 to Pr.1487**) correctly.			

◆ Alarm

上正科技有限公司
購買、維修 此手冊零組件
電話： 037-466333
Email: service@repairtw.com
Line ID: @repair
www.repairtw.com

Output is not shut off when a protective function is activated. The Alarm (LF) signal can be output depending on the parameter setting. (Set "98" in **Pr.190 to Pr.196 (Output terminal function selection)**. Refer to page 312.)

Operation panel indication	FN	FN	FR-LU08 indication	FN
Name	Fan alarm			
Description	For the inverter that contains a cooling fan, FN appears on the operation panel when the cooling fan stops due to a fault, low rotation speed, or different operation from the setting of **Pr.244 Cooling fan operation selection**.			
Check point	Check the cooling fan for a failure.			
Corrective action	The fan may be faulty. Contact your sales representative.			

Operation panel indication	FN2	FN2	FR-LU08 indication	FN2
Name	Internal fan alarm (IP55 compatible models only)			
Description	FN2 appears on the operation panel when the internal air circulation fan stops due to a fault or low rotation speed.			
Check point	Check the internal air circulation fan for a failure.			
Corrective action	The fan may be faulty. Contact your sales representative.			

◆ Fault

When a protective function is activated, the inverter output is shut off and a Fault signal is output.

Operation panel indication	E.OC1	E. OC 1	FR-LU08 indication	Overcurrent trip during acceleration
Name	Overcurrent trip during acceleration			
Description	When the inverter output current reaches or exceeds approximately 170% (LD rating) / 148% (SLD rating) of the rated current during acceleration, the protection circuit is activated and the inverter output is shut off.			
Check point	• Check for sudden speed acceleration. • Check if the downward acceleration time is too long in a lift application. • Check for output short-circuit. • Check that the **Pr.3 Base frequency** setting is not 60 Hz when the motor rated frequency is 50 Hz. • Check if the stall prevention operation level is set too high. Check if the fast-response current limit operation is disabled. • Check that the regenerative driving is not performed frequently. (Check if the output voltage becomes larger than the V/F reference voltage at regenerative driving and overcurrent occurs due to increase in the motor current.) • Check that the inverter capacity matches with the motor capacity. (PM motor control) • Check if a start command is given to the inverter while the motor is coasting. (PM motor control)			
Corrective action	• Set the acceleration time longer. (Shorten the downward acceleration time of the lift.) • If "E.OC1" always appears at start, disconnect the motor once and restart the inverter. If "E.OC1" still appears, contact your sales representative. • Check the wiring to make sure that output short circuit does not occur. • Set 50 Hz in **Pr.3 Base frequency**. (Refer to page 528.) • Lower the stall prevention operation level. Activate the fast-response current limit operation. (Refer to page 273.) • Set the base voltage (rated voltage of the motor, etc.) in **Pr.19 Base frequency voltage**. (Refer to page 528.) • Choose inverter and motor capacities that match. (PM motor control) • Input a start command after the motor stops. Alternatively, use the automatic restart after instantaneous power failure/flying start function. (Refer to page 451.) (PM motor control)			

上正科技有限公司
購買、維修、出手冊零組件
電話：037-466333
Email: sales@spinlong.com.tw
Line id: @zzzz
www.repair.tw.com

Operation panel indication	E.OC2	E. OC 2	FR-LU08 indication	Overcurrent trip during constant speed
Name	Overcurrent trip during constant speed			
Description	When the inverter output current reaches or exceeds approximately 170% (LD rating) / 148% (SLD rating) of the rated current during constant-speed operation, the protection circuit is activated and the inverter output is shut off.			
Check point	• Check for sudden load change. • Check for a short-circuit in the output circuit. • Check if the stall prevention operation level is set too high. Check if the fast-response current limit operation is disabled. • Check that the inverter capacity matches with the motor capacity. (PM motor control) • Check if a start command is given to the inverter while the motor is coasting. (PM motor control)			
Corrective action	• Keep the load stable. • Check the wiring to make sure that output short circuit does not occur. • Lower the stall prevention operation level. Activate the fast-response current limit operation. (Refer to page 273.) • Choose inverter and motor capacities that match. (PM motor control) • Input a start command after the motor stops. Alternatively, use the automatic restart after instantaneous power failure/flying start function. (Refer to page 451.) (PM motor control)			

Operation panel indication	E.OC3	E. OC3	FR-LU08 indication	OC During Dec
Name	Overcurrent trip during deceleration or stop			
Description	When the inverter output current reaches or exceeds approximately 170% (LD rating) / 148% (SLD rating) of the rated current during deceleration (other than acceleration or constant speed), the protection circuit is activated and the inverter output is shut off.			
Check point	• Check for sudden speed reduction. • Check for a short-circuit in the output circuit. • Check for too fast operation of the motor's mechanical brake. • Check if the stall prevention operation level is set too high. Check if the fast-response current limit operation is disabled. • Check that the inverter capacity matches with the motor capacity. (PM motor control) • Check if a start command is given to the inverter while the motor is coasting. (PM motor control)			
Corrective action	• Set the deceleration time longer. • Check the wiring to make sure that output short circuit does not occur. • Check the mechanical brake operation. • Lower the stall prevention operation level. Activate the fast-response current limit operation. (Refer to page 273.) • Choose inverter and motor capacities that match. (PM motor control) • Input a start command after the motor stops. Alternatively, use the automatic restart after instantaneous power failure/flying start function. (Refer to page 451.) (PM motor control)			

Operation panel indication	E.OV1	E. OV1	FR-LU08 indication	OV During Acc
Name	Regenerative overvoltage trip during acceleration			
Description	If regenerative power causes the inverter's internal main circuit DC voltage to reach or exceed the specified value, the protection circuit is activated to stop the inverter output. The circuit may also be activated by a surge voltage produced in the power supply system.			
Check point	• Check for too slow acceleration. (e.g. during downward acceleration in vertical lift load) • Check that the **Pr.22 Stall prevention operation level** is not set to the no load current or lower. • Check if the stall prevention operation is frequently activated in an application with a large load inertia.			
Corrective action	• Set the acceleration time shorter. Use the regeneration avoidance function **(Pr.882 to Pr.886)**. (Refer to page 545.) • Set a value larger than the no load current in **Pr.22**. • Set **Pr.154 Voltage reduction selection during stall prevention operation** = "10 or 11". (Refer to page 273.)			

上川科技有限公司
專業 維修 此手冊零組件
電話： 03-4663333
Email: service@repairtw.com
Line id: @rrz
www.repairtw.com

Operation panel indication	E.OV2	E. OV2	FR-LU08 indication	Steady spd OV
Name	Regenerative overvoltage trip during constant speed			
Description	If regenerative power causes the inverter's internal main circuit DC voltage to reach or exceed the specified value, the protection circuit is activated to stop the inverter output. The circuit may also be activated by a surge voltage produced in the power supply system.			
Check point	• Check for sudden load change. • Check that the **Pr.22 Stall prevention operation level** is not set to the no load current or lower. • Check if the stall prevention operation is frequently activated in an application with a large load inertia. • Check that acceleration/deceleration time is not too short.			
Corrective action	• Keep the load stable. • Use the regeneration avoidance function **(Pr.882 to Pr.886)**. (Refer to page 545.) • Use the brake unit or power regeneration common converter (FR-CV) as required. • Set a value larger than the no load current in **Pr.22**. • Set **Pr.154 Voltage reduction selection during stall prevention operation** = "10 or 11". (Refer to page 273.) • Set the acceleration/deceleration time longer. (Under Advanced magnetic flux vector control, the output torque can be increased. However, sudden acceleration may cause an overshoot in speed, resulting in an occurrence of overvoltage.)			

Operation panel indication	E.OV3	E. OV3	FR-LU08 indication	OV During Acc
Name	Regenerative overvoltage trip during deceleration or stop			
Description	If regenerative power causes the inverter's internal main circuit DC voltage to reach or exceed the specified value, the protection circuit is activated to stop the inverter output. The circuit may also be activated by a surge voltage produced in the power supply system.			
Check point	• Check for sudden speed reduction. • Check if the stall prevention operation is frequently activated in an application with a large load inertia.			
Corrective action	• Set the deceleration time longer. (Set the deceleration time which matches the moment of inertia of the load.) • Make the brake cycle longer. • Use the regeneration avoidance function **(Pr.882 to Pr.886)**. (Refer to page 545.) • Use the brake unit or power regeneration common converter (FR-CV) as required. • Set **Pr.154 Voltage reduction selection during stall prevention operation** = "10 or 11". (Refer to page 273.)			

Operation panel indication	E.THT	E. THT	FR-LU08 indication	Inv. Overload
Name	Inverter overload trip (electronic thermal relay function)*1			
Description	If the temperature of the output transistor elements exceeds the protection level with a rated output current or higher flowing without the overcurrent trip (E.OC[]), the inverter output is stopped. (Overload capacity 120% 60 s)			
Check point	• Check that acceleration/deceleration time is not too short. • Check that torque boost setting is not too large (small). • Check that load pattern selection setting is appropriate for the load pattern of the machine. • Check the motor for the use under overload.			
Corrective action	• Set the acceleration/deceleration time longer. • Adjust the torque boost setting. • Set the load pattern selection setting according to the load pattern of the using machine. • Reduce the load.			

*1 Resetting the inverter initializes the internal cumulative heat value of the electronic thermal relay function.

上正科技有限公司
購買、維修、出手用電組件
電話：886-2-2913-3373
Email: service@repair-tw.com
Line ID: @2224
www.repair-tw.com

Operation panel indication	E.THM	E. THM	FR-LU08 indication	Motor Ovrload
Name	Motor overload trip (electronic thermal relay function)*2			
Description	The electronic thermal O/L relay function in the inverter detects motor overheat, which is caused by overload or reduced cooling capability during low-speed operation. When the cumulative heat value reaches 85% of the **Pr.9 Electronic thermal O/L relay** setting, pre-alarm (TH) is output. When the accumulated value reaches the specified value, the protection circuit is activated to stop the inverter output. When the inverter is used to drive a dedicated motor, such as a multiple-pole motor, or several motors, the motor cannot be protected by the electronic thermal O/L relay. Install an external thermal relay on the inverter output side.			
Check point	• Check the motor for the use under overload. • Check that the setting of **Pr.71 Applied motor** for motor selection is correct. (Refer to page 362.) • Check that the stall prevention operation setting is correct.			
Corrective action	• Reduce the load. • For a constant-torque motor, set the constant-torque motor in **Pr.71**. • Set the stall prevention operation level accordingly. (Refer to page 273.)			

*2 Resetting the inverter initializes the internal cumulative heat value of the electronic thermal relay function.

Operation panel indication	E.FIN	E. FIN	FR-LU08 indication	H/Sink O/Temp
Name	Heatsink overheat			
Description	When the heatsink overheats, the temperature sensor is activated, and the inverter output is stopped. The FIN signal can be output when the temperature becomes approximately 85% of the heatsink overheat protection operation temperature. For the terminal used for the FIN signal output, assign the function by setting "26 (positive logic) or 126 (negative logic)" from **Pr.190 to Pr.196 (output terminal function selection)**. (Refer to page 312.)			
Check point	• Check for too high surrounding air temperature. • Check for heatsink clogging. • Check that the cooling fan is not stopped. (Check that FN is not displayed on the operation panel.)			
Corrective action	• Set the surrounding air temperature to within the specifications. • Clean the heatsink. • Replace the cooling fan.			

Operation panel indication	E.IPF	E. IPF	FR-LU08 indication	Instantaneous power failure
Name	Instantaneous power failure (Standard models and IP55 compatible models only)			
Description	If a power failure occurs (or when power input to the inverter is shut off) for longer than 15 ms[*3], the instantaneous power failure protective function is activated to shut off the inverter output in order to prevent the control circuit from malfunctioning. If a power failure persists for 100 ms or longer, the fault warning output is not provided, and the inverter restarts if the start signal is ON upon power restoration. (The inverter continues operating if an instantaneous power failure is within 15 ms[*3].) In some operating status (load magnitude, acceleration/deceleration time setting, etc.), overcurrent or other protection may be activated upon power restoration. When instantaneous power failure protection is activated, the IPF signal is output. (Refer to page 446 and page 451.)			
Check point	Find the cause of instantaneous power failure occurrence.			
Corrective action	• Remedy the instantaneous power failure. • Prepare a backup power supply for instantaneous power failure. • Set the function of automatic restart after instantaneous power failure **(Pr.57)**. (Refer to page 446 and page 451.)			

*3 10 ms for IP55 compatible models

Operation panel indication	E.UVT	E. UVT	FR-LU08 indication	Under Voltage
Name	Undervoltage (Standard models and IP55 compatible models only)			
Description	If the power supply voltage of the inverter decreases, the control circuit will not perform normal functions. In addition, the motor torque will be insufficient and/or heat generation will increase. To prevent this, if the power supply voltage decreases to about 150 VAC (300 VAC for the 400 V class) or below, this function shuts off the inverter output. When a jumper is not connected across P/+ and P1, the undervoltage protective function is activated. When undervoltage protection is activated, the IPF signal is output. (Refer to page 446 and page 451.)			
Check point	• Check if a high-capacity motor is driven. • Check if the jumper is connected across terminals P/+ and P1.			
Corrective action	• Check the devices on the power supply line such as the power supply itself. • Do not remove the jumper across terminals P/+ and P1 except when connecting a DC reactor. • If the problem still persists after taking the above measure, contact your sales representative.			

上市加倍有限公司
購買、維修、件十萬零組件
電話： 037-466333
Email: service@repairtw.com
Line id: @2231
www.repairtw.com

Operation panel indication	E.ILF	E. ILF	FR-LU08 indication	Input phase loss
Name	Input phase loss (Standard models and IP55 compatible models only)			
Description	When **Pr.872 Input phase loss protection selection** is enabled ("1") and one of the three-phase power input is lost, the inverter output is shut off. This protective function is not available when **Pr.872** is set to the initial value (**Pr.872** = "0"). (Refer to page 260.)			
Check point	Check for a break in the cable for the three-phase power supply input.			
Corrective action	• Wire the cables properly. • Repair a break portion in the cable.			

Operation panel indication	E.OLT	E. OLT	FR-LU08 indication	Stall Prev STP
Name	Stall prevention stop			
Description	V/F Magnetic flux If the output frequency has fallen to 0.5 Hz by stall prevention operation and remains for 3 seconds, a fault (E.OLT) appears and the inverter is shut off. OL appears while stall prevention is being activated.			
	PM During speed control, a fault (E.OLT) appears and the inverter output is shut off if the frequency value converted from the motor rotation speed drops to 1.5 Hz or lower by stall prevention operation and the output torque exceeds the **Pr.874 OLT level setting** (refer to page page 273) and remains there for 3 s.			
Check point	• Check the motor for the use under overload. • Check that the **Pr.874** setting is correct. (Check the **Pr.22 Stall prevention operation level** setting under V/F control and Advanced magnetic flux vector control.) • Check if a motor is connected under PM motor control.			
Corrective action	• Reduce the load. • Change the **Pr.22 (Pr.874)** setting. (Check the **Pr.22** setting under V/F control and Advanced magnetic flux vector control.) • For the test operation without connecting a motor, select the PM motor control test operation. (Refer to page 169.) • Also check that the stall prevention (overcurrent) warning (OL) or the stall prevention (overvoltage) warning (oL) countermeasure is taken.			

Operation panel indication	E.SOT PM	E. SOT	FR-LU08 indication	Motor Step Out
Name	Loss of synchronism detection			
Description	The inverter output is shut off when the motor operation is not synchronized. (This function is only available under PM motor control.)			
Check point	• Check that the PM motor is not driven overloaded. • Check if a start command is given to the inverter while the PM motor is coasting. • Check if a motor is connected under PM motor control. • Check if a PM motor other than the MM-EFS or MM-THE4 series is driven.			
Corrective action	• Set the acceleration time longer. • Reduce the load. • If the inverter restarts during coasting, set **Pr.57 Restart coasting time** ≠ "9999", and select the automatic restart after instantaneous power failure. • Check the connection of the IPM motor. • For the test operation without connecting a motor, select the PM motor control test operation. (Refer to page 169.) • Drive an IPM motor (MM-EFS or MM-THE4 series). • When driving a PM motor other than the MM-EFS or MM-THE4 series, offline auto tuning must be performed. (Refer to page 375.)			

上正科技有限公司
購買、維修此手冊零組件
電話： 037-466333
Email: service@repairtw.com
Line id: @zzzz
www.repairtw.com

Operation panel indication	E.LUP	E. LUP	FR-LU08 indication	Upper limit fault detection
Name	Upper limit fault detection			
Description	The inverter output is shut off when the load exceeds the upper limit fault detection range. This protective function is not available in the initial setting of **Pr.1490** (**Pr.1490** = "9999").			
Check point	• Check if too much load is applied to the equipment. • Check that the load characteristics settings are correct.			
Corrective action	• Inspect the equipment. • Set the load characteristics (**Pr.1481 to Pr.1487**) correctly.			

Operation panel indication	E.LDN	E. LdN	FR-LU08 indication	Lower limit fault detection
Name	Lower limit fault detection			
Description	The inverter output is shut off when the load falls below the lower limit fault detection range. This protective function is not available in the initial setting of **Pr.1491** (**Pr.1491** = "9999").			
Check point	• Check if the equipment load is too light. • Check that the load characteristics settings are correct.			
Corrective action	• Inspect the equipment. • Set the load characteristics (**Pr.1481 to Pr.1487**) correctly.			

Operation panel indication	E.GF	E. GF	FR-LU08 indication	Ground Fault
Name	Output side earth (ground) fault overcurrent			
Description	The inverter output is shut off if an earth (ground) fault overcurrent flows due to an earth (ground) fault that occurred on the inverter's output side (load side).			
Check point	Check for a ground fault in the motor and connection cable.			
Corrective action	Remedy the earth (ground) fault portion.			

Operation panel indication	E.LF	E. LF	FR-LU08 indication	Output phase loss
Name	Output phase loss			
Description	The inverter output is shut off if one of the three phases (U, V, W) on the inverter's output side (load side) is lost.			
Check point	• Check the wiring. (Check that the motor is normally operating.) • Check that the capacity of the motor used is not smaller than that of the inverter. • Check if a start command is given to the inverter while the motor is coasting. (PM motor control)			
Corrective action	• Wire the cables properly. • Input a start command after the motor stops. Alternatively, use the automatic restart after instantaneous power failure/flying start function (page 451). (PM motor control)			

Operation panel indication	E.OHT	E. OHT	FR-LU08 indication	Ext TH relay oper
Name	External thermal relay operation			
Description	The inverter output is shut off if the external thermal relay provided for motor overheat protection or the internally mounted thermal relay in the motor, etc. switches ON (contacts open). This function is available when "7" (OH signal) is set in any of **Pr.178 to Pr.189 (Input terminal function selection)**. This protective function is not available in the initial status. (OH signal is not assigned.)			
Check point	• Check for motor overheating. • Check that the value "7" (OH signal) is set correctly to any of **Pr.178 to Pr.189 (Input terminal function selection)**.			
Corrective action	• Reduce the load and operation duty. • Even if the relay contacts are reset automatically, the inverter will not restart unless it is reset.			

上江科技有限公司
購買、維修、此手冊零組件
電話： 037-466333
Email: service@repairtw.com
Line id: @zzzz
www.repairtw.com

Operation panel indication	E.PTC	E. PTC	FR-LU08 indication	PTC thermistor oper
Name	PTC thermistor operation			
Description	The inverter output is shut off if resistance of the PTC thermistor connected between terminal 2 and terminal 10 is equal to or higher than the **Pr.561 PTC thermistor protection level** setting for a continuous time equal to or longer than the setting value in **Pr.1016 PTC thermistor protection detection time**. When the initial value (**Pr.561** = "9999") is set, this protective function is not available.			
Check point	• Check the connection with the PTC thermistor. • Check the **Pr.561** and **Pr.1016** settings. • Check the motor for operation under overload.			
Corrective action	Reduce the load.			

Operation panel indication	E.OPT	E. OPT	FR-LU08 indication	Option Fault
Name	Option fault			
Description	• Appears when the AC power supply is connected to terminal R/L1, S/L2, or T/L3 accidentally when a high power factor converter (FR-HC2) or power regeneration common converter (FR-CV) is connected (when **Pr.30 Regenerative function selection** = "2"). • Appears when the switch for manufacturer setting of the plug-in option is changed. • Appears when a communication option is connected while **Pr.296 Password lock level** = "0 or 100".			
Check point	• Check that the AC power supply is not connected to terminal R/L1, S/L2, or T/L3 when a high power factor converter (FR-HC2) or power regeneration common converter (FR-CV) is connected (when **Pr.30** = "2"). • Check for the password lock with a setting of **Pr.296** = "0, 100".			
Corrective action	• Check the **Pr.30** setting and connection with the FR-HC2 or FR-CV. • The inverter may be damaged if the AC power supply is connected to terminal R/L1, S/L2, or T/L3 when a high power factor converter is connected. Contact your sales representative. • Set the switch on the plug-in option, which is for manufacturer setting, back to the initial setting. (Refer to the Instruction Manual of each option.) • To apply the password lock when installing a communication option, set **Pr.296** ≠ "0, 100". (Refer to page 198.)			

Operation panel indication	E.OP1	E. OP 1	FR-LU08 indication	Option1 Fault
Name	Communication option fault			
Description	The inverter output is shut off if a communication line error occurs in the communication option.			
Check point	• Check for an incorrect option function setting and operation. • Check that the plug-in option is plugged into the connector securely. • Check for a break in the communication cable. • Check that the terminating resistor is fitted properly.			
Corrective action	• Check the option function setting, etc. • Connect the plug-in option securely. • Check the connection of communication cable.			

Operation panel indication	E.16 to E.20	E. 16 to E. 20	FR-LU08 indication	Fault 16 to Fault 20
Name	User definition error by the PLC function			
Description	The protective function is activated by setting "16 to 20" in the special register SD1214 for the PLC function. The inverter output is shut off when the protective function is activated. The protective function is activated when the PLC function is enabled. This protective function is not available in the initial setting (**Pr.414** = "0"). Any character string can be displayed on FR-LU08 or FR-PU07 by sequence programs.			
Check point	• Check if "16 to 20" is set in the special register SD1214.			
Corrective action	• Set a value other than "16 to 20" in the special register SD1214.			

Operation panel indication	E.PE	E. PE	FR-LU08 indication	Corrupt Memory
Name	Parameter storage device fault			
Description	The inverter output is shut off if a fault occurs in the parameter stored. (EEPROM failure)			
Check point	Check for too many number of parameter write times.			
Corrective action	Contact your sales representative. Set "1" in **Pr.342 Communication EEPROM write selection** (write to RAM) for the operation which requires frequent parameter writing via communication, etc. Note that writing to RAM goes back to the initial status at power OFF.			

上林科技有限公司
購買、維修、此手冊零組件
電話： 03-466333
Email: service@repairtw.com
Line id: @zzz
www.repairtw.com

Operation panel indication	E.PUE	E. PUE	FR-LU08 indication	PU disconnection
Name	PU disconnection			
Description	• The inverter output is shut off if communication between the inverter and PU is suspended, e.g. the operation panel or parameter unit is disconnected, when the disconnected PU disconnection function is valid in **Pr.75 Reset selection/disconnected PU detection/PU stop selection**. • The inverter output is shut off if communication errors occurred consecutively for more than permissible number of retries when **Pr.121 PU communication retry count** ≠ "9999" during the RS-485 communication. • The inverter output is shut off if communication is broken within the period of time set in **Pr.122 PU communication check time interval** during the RS-485 communication via the PU connector.			
Check point	• Check that the operation panel or the parameter unit is connected properly. • Check the **Pr.75** setting.			
Corrective action	Fit the operation panel or the parameter unit securely.			

Operation panel indication	E.RET	E. RET	FR-LU08 indication	Retry count excess
Name	Retry count excess			
Description	The inverter output is shut off if the operation cannot be resumed properly within the number of retries set in **Pr.67 Number of retries at fault occurrence**. This function is available when **Pr.67** is set. This protective function is not available in the initial setting (**Pr.67** = "0").			
Check point	Find the cause of the fault occurrence.			
Corrective action	Eliminate the cause of the fault preceding this fault indication.			

Operation panel indication	E.PE2	E. PE2	FR-LU08 indication	PR storage alarm
Name	Parameter storage device fault			
Description	The inverter output is shut off if a fault occurs in the parameter stored. (EEPROM failure)			
Check point	————			
Corrective action	Contact your sales representative.			

Operation panel indication	E.CPU	E. CPU	FR-LU08 indication	CPU fault
	E. 5	E. 5		Error5
	E. 6	E. 6		Error6
	E. 7	E. 7		Error7
Name	CPU fault			
Description	The inverter output is shut off if the communication fault of the built-in CPU occurs.			
Check point	Check for devices producing excess electrical noises around the inverter.			
Corrective action	• Take measures against noises if there are devices producing excess electrical noises around the inverter. • Contact your sales representative.			

Operation panel indication	E.CTE	E. CTE	FR-LU08 indication	Circuit fault
Name	Operation panel power supply short circuit/RS-485 terminals power supply short circuit			
Description	• When the power supply for the operation panel (PU connector) is shorted, the power output is shutoff and the inverter output is shut off. The use of the operation panel (parameter unit) and the RS-485 communication via the PU connector are disabled. To reset, enter the RES signal from the terminal, reset through communication via the RS-485 terminals, or switch power OFF then ON again. • When the power supply for the RS-485 terminals are short circuited, this function shuts off the power output. At this time, communication from the RS-485 terminals cannot be made. To reset, use STOP RESET on the operation panel, enter the RES signal, or switch power OFF then ON again.			
Check point	• Check that the PU connector cable is not shorted. • Check that the RS-485 terminals are connected correctly.			
Corrective action	• Check PU and the cable. • Check the connection of the RS-485 terminals.			

E.P24 科技有限公司
購買、維修 此手冊零組件
電話：037-466333
Email: service@repairtw.com
Line id: @xzzz
www.repairtw.com

Operation panel indication	E.P24	E. P24	FR-LU08 indication	24 VDC power fault
Name	24 VDC power fault			
Description	• When the 24 VDC power output from the PC terminal is shorted, this function shuts off the power output. At this time, all external contact inputs switch OFF. The inverter cannot be reset by entering the RES signal. To reset it, use the operation panel, or switch power OFF, then ON again.			
Check point	• Check for a short circuit in the PC terminal output. • Check that the 24 V external power supply voltage is correct.			
Corrective action	• Repair the short-circuited portion. • Supply the power at 24 V. (If the power with insufficient voltage is supplied to the 24 V input circuit for a long time, the inverter internal circuit may heats up. Although it will not damage the inverter, supply power at the correct voltage .)			

Operation panel indication	E.CDO	E. CdO	FR-LU08 indication	OC detect level
Name	Abnormal output current detection			
Description	The inverter output is shut off if the output current exceeds the **Pr.150 Output current detection level** setting. This functions is available when "1" is set in **Pr.167 Output current detection operation selection**. When the initial value (**Pr.167** = "0") is set, this protective function is not available.			
Check point	Check the settings of **Pr.150, Pr.151 Output current detection signal delay time, Pr.166 Output current detection signal retention time**, and **Pr.167**. (Refer to page 321.)			

Operation panel indication	E.IOH	E. IOH	FR-LU08 indication	Inrush overheat
Name	Inrush current limit circuit fault (Standard models and IP55 compatible models only)			
Description	The inverter output is shut off when the resistor of the inrush current limit circuit is overheated. The inrush current limit circuit is faulty.			
Check point	• Check that frequent power ON/OFF is not repeated. • Check if the input side fuse (5A) in the power supply circuit of the inrush current limit circuit contactor (FR-F840-03250(132K) or higher) is blown. • Check that the power supply circuit of inrush current limit circuit contactor is not damaged.			
Corrective action	Configure a circuit where frequent power ON/OFF is not repeated. If the problem still persists after taking the above measure, contact your sales representative.			

Operation panel indication	E.SER	E. SER	FR-LU08 indication	VFD Comm error
Name	Communication fault (inverter)			
Description	The inverter output is shut off when communication error occurs consecutively for the permissible number of retries or more when **Pr.335 RS-485 communication retry count** ≠ "9999" during RS-485 communication through the RS-485 terminals. The inverter output is also shut off if communication is broken for the period of time set in **Pr.336 RS-485 communication check time interval**.			
Check point	Check the RS-485 terminal wiring.			
Corrective action	Perform wiring of the RS-485 terminals properly.			

Operation panel indication	E.AIE	E. AI E	FR-LU08 indication	Analog input fault
Name	Analog input fault			
Description	The inverter output is shut off when a 30 mA or higher current or a 7.5 V or higher voltage is input to terminal 2 while the current input is selected by **Pr.73 Analog input selection**, or to terminal 4 while the current input is selected by **Pr.267 Terminal 4 input selection**.			
Check point	Check the **Pr.73, Pr.267**, and the voltage/current input switch settings. (Refer to page 330.)			
Corrective action	Either give a current less than 30 mA, or set **Pr.73, Pr.267**, and the voltage/current input switch to the voltage input and input a voltage.			

Operation panel indication	E.USB	E. USb	FR-LU08 indication	USB comm error
Name	USB communication fault			
Description	The inverter output is shut off when the communication is cut off for the time set in **Pr.548 USB communication check time interval**.			
Check point	• Check that the USB communication cable is connected securely.			
Corrective action	• Check the **Pr.548** setting. • Connect the USB communication cable securely. • Increase the **Pr.548** setting or set "9999." (Refer to page 523.)			

正科技有限公司
購買・維修 此手冊零組件
電話: 0934466332
Email: service@repairtw.com
Line ID: ddzzz
www.repairtw.com

Operation panel indication	E.SAF	E. SAF	FR-LU08 indication	safety circuit fault
Name	Safety circuit fault			
Description	• The inverter output is shut off when a safety circuit fault occurs. • The inverter output is shut off if the either of the wire between S1 and SIC or S2 and SIC becomes non-conductive while using the safety stop function. • When the safety stop function is not used, the inverter output is shut off when the shorting wire between terminals S1 and PC or across S2 and PC is disconnected.			
Check point	• Check that the safety relay module or the connection has no fault when using the safety stop function. • Check if the shorting wire between S1 and PC or between S2 and PC is disconnected when not using the safety stop function.			
Corrective action	• When using the safety stop function, check that wiring of terminal S1, S2 and SIC is correct and the safety stop input signal source such as a safety relay module is operating properly. Refer to the Safety Stop Function Instruction Manual for causes and countermeasures. (Contact your sales representative for the manual.) • When the safety stop function is not used, short across terminals S1 and PC and across S2 and PC with shorting wires. (Refer to page 70.)			

Operation panel indication	E.PBT	E. PbT	FR-LU08 indication	PBT fault
	E.13	E. 13		Internal circuit fault
	E.BE	E. bE		Br. Cct. Fault
Name	Internal circuit fault			
Description	The inverter output is shut off when an internal circuit fault occurs.			
Corrective action	Contact your sales representative.			

Operation panel indication	E.OS	E. OS	FR-LU08 indication	Overspeed occurrence
Name	Overspeed occurrence			
Description	The inverter output is shut off when the motor speed exceeds the **Pr.374 Overspeed detection level** under PM motor control. This protective function is not available in the initial status.			
Check point	• Check that the **Pr.374** setting is correct.			
Corrective action	• Set the **Pr.374** correctly.			

Operation panel indication	E.IAH	E. IAH	FR-LU08 indication	Abnormal Intnl Temp
Name	Abnormal internal temperature (Standard models and IP55 compatible models only)			
Description	The inverter output is shut off when the inverter internal temperature reaches the specified value or higher.			
Check point	• Check for too high surrounding air temperature. • Check if the internal air circulation fan or the cooling fan stops due to a fault.			
Corrective action	• Install an inverter suitable for the installation environment. (Refer to the Instruction Manual (Hardware).) • Replace the internal air circulation fan or the cooling fan.			

Operation panel indication	E.LCI	E. LCI	FR-LU08 indication	4 mA input fault
Name	4 mA input fault			
Description	The inverter output is shut off when the analog input current is 2 mA or less for the time set in **Pr.778 4 mA input check filter**. This function is available when **Pr.573 4 mA input check selection** = "2 or 3". (Refer to page 350.) This protective function is not available in the initial status.			
Check point	• Check for a break in the wiring for the analog current input. • Check that the **Pr.778** setting is not too short.			
Corrective action	• Check the wiring for the analog current input. • Set the **Pr.778** setting larger.			

Operation panel indication	E.PCH	E. PCH	FR-LU08 indication	Pre-charge fault
Name	Pre-charge fault			
Description	The inverter output is shut off when the pre-charge time exceeds **Pr.764 Pre-charge time limit**. The inverter output is shut off when the measured value exceeds **Pr.763 Pre-charge upper detection level** during pre-charging. This function is available when **Pr.764** and **Pr.763** are set (refer to page 425). This protective function is not available in the initial status.			
Check point	• Check that the **Pr.764** setting is not too short. • Check that the **Pr.763** setting is not too small. • Check that the **Pr.127 PID control automatic switchover frequency** setting is not too low. • Check for a break in the connection to the pump.			
Corrective action	• Set the **Pr.764** setting longer. • Set the **Pr.763** setting larger. • Set the **Pr.127** setting higher. • Check the connection to the pump.			

科達科技有限公司
專業維修 伺服電機 電子零組件
電話: 037-466333
Email: service@repairtw.com
Line id: @zzzz
www.repairtw.com

Operation panel indication	E.PID	E. PID	FR-LU08 indication	PID signal fault
Name	PID signal fault			
Description	The inverter output is shut off if the measured value exceeds the PID upper limit or PID lower limit parameter setting, or the absolute deviation value exceeds the PID deviation parameter setting during PID control. Set this function in **Pr.131 PID upper limit, Pr.132 PID lower limit, Pr.553 PID deviation limit**, and **Pr.554 PID signal operation selection**. (Refer to page 401.) This protective function is not available in the initial status. The inverter trips when the input pressure reaches the fault level under PID input pressure control. Set this function in **Pr.1370 PID upper limit** and **Pr.1379 PID input pressure fault level**. (Refer to page 439.) This protective function is not available in the initial status.			
Check point	• Check the meter for a failure or break. • Check that the parameter settings are correct.			
Corrective action	• Check that the meter has no failure or break. • Set the parameters correctly.			

Operation panel indication	E. 1 to E. 3	E. 1 to E. 3	FR-LU08 indication	Fault 1 to Fault 3
Name	Option fault			
Description	• The inverter output is shut off when a contact fault is found between the inverter and the plug-in option, or when the communication option is not connected to the connector 1. • Appears when the switch for manufacturer setting of the plug-in option is changed.			
Check point	• Check that the plug-in option is plugged into the connector securely. (1 to 3 indicate connector numbers for connection of options.) • Check for excessive noise around the inverter. • Check if the communication option is connected to the connector 2 or 3.			
Corrective action	• Connect the plug-in option securely. • Take measures against noises if there are devices producing excessive electrical noises around the inverter. If the problem still persists after taking the above measure, contact your sales representative. • Connect the communication option to the connector 1. • Set the switch on the plug-in option, which is for manufacturer setting, back to the initial setting. (Refer to the Instruction Manual of each option.)			

◆ Others

Indicate the status of the inverter. It is not a fault.

Operation panel indication	E.0	E. 0	FR-LU08 indication	No faults
Name	No fault history			
Description	Appears when no fault records are stored. (Appears when the fault history is cleared after the protective function has been activated.)			

Operation panel indication	EV	EV	FR-LU08 indication	—
Name	24 V external power supply operation			
Description	Blinks when the main circuit power supply is off and the 24 V external power supply is being input.			
Check point	• Power is supplied from a 24 V external power supply.			
Corrective action	• Turning ON the power supply (main circuit) of the inverter clears the indication. • If the indication is still displayed after turning ON of the power supply (main circuit) of the inverter, the power supply voltage may be low, or the jumper between terminals P/+ and P1 may be disconnected.			

上正科技有限公司
購買、維修 此手冊零組件
電話： 037-466333
Email: sales@repairtw.com
Line id: @zzzz

Operation panel indication	RD	www.repairtw.com Rd
Name	Backup in progress	
Description	The GOT is used for backing up inverter parameters and the data used in the PLC function of inverter. (Refer to page 525.)	

Operation panel indication	WR	WR
Name	Restoration in progress	
Description	The backup data stored in the GOT is used to restore the data in the inverter. (Refer to page 525.)	

NOTE

- If protective functions with indication of "Fault" on the FR-LU08 or FR-PU07 are activated, "ERR" appears in the fault history of the FR-LU08 or FR-PU07.
- If faults other than the above appear, contact your sales representative.

6.6 Check first when you have a trouble

Point

- If the cause is still unknown after every check, it is recommended to initialize the parameters, set the required parameter values and check again.

6.6.1 Motor does not start

Check point	Possible cause	Countermeasure	Refer to page
Main circuit	An appropriate power supply voltage is not applied. (The operation panel display is not operating.)	Power on a molded case circuit breaker (MCCB), an earth leakage circuit breaker (ELB), or a magnetic contactor (MC).	—
		Check for the decreased input voltage, input phase loss, and wiring.	—
		If only the control power is ON when using a separate power source for the control circuit, turn ON the main circuit power.	66
	The motor is not connected properly.	Check the wiring between the inverter and the motor. If the electronic bypass function is active, check the wiring of the magnetic contactor (MC) between the inverter and the motor.	48
	The jumper across P/+ to P1 is disconnected. A DC reactor (FR-HEL) is not connected.	Securely fit a jumper across P/+ and P1. When using a DC reactor (FR-HEL), remove the jumper across P/+ to P1, and then connect the DC reactor. Connect the DC reactor securely when required according to the capacity.	48, 81

上正科技有限公司
購買、維修 此手冊零組件
電話： 037-466333
Email: service@repairtw.com
Line id: @zzzz
www.repairtw.com

Check point	Possible cause	Countermeasure	Refer to page
Input signal	A start signal is not input.	Check the start command source, and input a start signal. PU operation mode: FWD / REV External operation mode: STF/STR signal	232
	Both the forward and reverse rotation start signals (STF, STR) are input simultaneously.	Turn ON only one of the forward and reverse rotation start signals (STF or STR). When the STF and STR signals are turned ON simultaneously in the initial setting, a stop command is given.	58
	Frequency command is zero. (The [FWD] or [REV] LED indicator on the operation panel is blinking.)	Check the frequency command source and input a frequency command.	232
	The Terminal 4 input selection (AU) signal is not ON when terminal 4 is used for frequency setting. (The [FWD] or [REV] LED indicator on the operation panel is blinking.)	Turn ON the AU signal. Turning ON the AU signal activates terminal 4 input.	330
	The Output stop (MRS) signal or Inverter reset (RES) signal is ON. (The [FWD] or [REV] LED indicator on the operation panel is blinking.)	Turn the MRS or RES signal OFF. The inverter starts the operation with a given start command and a frequency command after turning OFF the MRS or RES signal. Before turning OFF, ensure the safety.	58
	The CS signal is OFF while the automatic restart after instantaneous power failure function is selected (**Pr.57 Restart coasting time** ≠ 9999). (The [FWD] or [REV] LED indicator on the operation panel is blinking.)	Turn ON the Selection of automatic restart after instantaneous power failure / flying start (CS) signal. When the CS signal is assigned to an input terminal, automatic restart operation is enabled when the CS signal is turned ON.	446
	The jumper connector for selecting sink logic or source logic is incorrectly installed. (The [FWD] or [REV] LED indicator on the operation panel is blinking.)	Check that the control logic switchover jumper connector is correctly installed. If it is not installed correctly, the input signal is not recognized.	62
	The voltage/current input switch is not correctly set for the analog input signal (0 to 5 V, 0 to 10 V, or 4 to 20 mA). (The [FWD] or [REV] LED indicator on the operation panel is blinking.)	Set **Pr.73 Analog input selection, Pr.267 Terminal 4 input selection**, and a voltage/current input switch correctly, then input an analog signal in accordance with the setting.	330
	The STOP RESET key was pressed. (The operation panel indication is "PS" (PS).)	During the External operation mode, check the method of restarting from a STOP RESET input stop from PU.	190, 572
	For the separated converter type, terminals RDA and SE of the converter unit are not connected to terminals MRS (X10 signal) and SD (PC for source logic) of the inverter respectively.	Check for secure wiring connections.	Refer to the Instruction Manual (Hardware) of the FR-F802.
	Two-wire or three-wire type connection is incorrect.	Check the connection. Use the Start self-holding selection (STP (STOP)) signal when the three-wire type is used.	359

上正科技有限公司
電話： 037-466333
Email: service@repairtw.com
Line id: @2222
www.repairtw.com

Check point	Possible cause	Countermeasure	Refer to page
Parameter setting	Under V/F control, **Pr.0 Torque boost** setting is not appropriate.	Increase the **Pr.0** setting by 0.5% increments while observing the rotation of a motor. If that makes no difference, decrease the setting.	527
	Pr.78 Reverse rotation prevention selection is set.	Check the **Pr.78** setting. Set **Pr.78** when you want to limit the motor rotation to only one direction.	245
	The **Pr.79 Operation mode selection** setting is incorrect.	Select the operation mode suitable for the input methods of the start command and frequency command.	228
	The bias and gain **(calibration parameter C2 to C7)** settings are not appropriate.	Check the bias and gain **(calibration parameter C2 to C7)** settings.	339
	The **Pr.13 Starting frequency** setting is greater than the running frequency.	Set the running frequency higher than the one set in **Pr.13**. The inverter does not start if the frequency setting signal has a value lower than that of **Pr.13**.	225, 226
	Zero is set in various running frequency settings (such as for multi-speed operation). Especially, **Pr.1 Maximum frequency** is zero.	Set the frequency command according to the application. Set **Pr.1** higher than the actual frequency used.	249, 271
	Pr.15 Jog frequency is lower than **Pr.13 Starting frequency** for JOG operation.	The **Pr.15** setting should be equal to or higher than the **Pr.13** setting.	225, 226, 248
	Operation mode and a writing device do not correspond.	Check **Pr.79 Operation mode selection, Pr.338 Communication operation command source, Pr.339 Communication speed command source, Pr.550 NET mode operation command source selection** and **Pr.551 PU mode operation command source selection**, and select an operation mode suitable for the purpose.	228, 239
	The start signal operation selection is set by **Pr.250 Stop selection**	Check the **Pr.250** setting and the connection of the STF and STR signals.	359
	The motor has decelerated to a stop when the power failure time deceleration-to-stop function is selected.	When power is restored, ensure the safety, and turn OFF the start signal once, then turn ON again to restart. When **Pr.261 Power failure stop selection** = "2 or 12", the motor automatically restarts after the power is restored.	458
	Auto tuning is being performed.	When offline auto tuning ends, press the STOP RESET key of the operation panel for the PU operation. For the External operation, turn OFF the start signal (STF or STR). This operation resets the offline auto tuning, and the PU's monitor display returns to the normal indication. (Without this operation, next operation cannot be started.)	366, 455
	The automatic restart after instantaneous power failure function or power failure stop function has been activated. (Performing overload operation during input phase loss may cause voltage insufficiency, and that may result in detection of power failure.)	Set **Pr.872 Input phase loss protection selection** = "1" (input phase failure protection active). Disable the automatic restart after instantaneous power failure function and power failure stop function. Reduce the load. Increase the acceleration time if the function was activated during acceleration.	260, 446, 451, 458
	The motor test operation is selected under PM motor control.	Check the **Pr.800 Control method selection** setting.	169
	When the FR-HC2, FR-CV, or FR-CC2 is used, the input logic setting of the X10 signal is incorrect.	Set **Pr.599** = "0" (initial value for standard models and IP55 compatible models) to use the X10 signal with the NO contact input specification, and **Pr.599** = "1" (initial value for separated converter types) to use the X10 signal with the NC contact input specification.	539
Load	Load is too heavy.	Reduce the load.	—
	The shaft is locked.	Inspect the machine (motor).	—

上正科技有限公司
購買、維修、出售、模組
電話：037-466333
Email: service@repairhw.com
Line id: 0966226
www.repairhw.com

6.6.2 Motor or machine is making abnormal acoustic noise

Check point	Possible cause	Countermeasure	Refer to page
Input signal	Disturbance due to EMI when the frequency or torque command is given through analog input terminal 1, 2, or 4.	Take countermeasures against EMI.	84
Parameter setting		Increase the **Pr.74 Input filter time constant** setting if steady operation cannot be performed due to EMI.	337
Parameter setting	No carrier frequency noises (metallic noises) are generated.	In the initial setting, **Pr.240 Soft-PWM operation selection** is enabled to change motor noise to an unoffending complex tone. Therefore, no carrier frequency noises (metallic noises) are generated. Set **Pr.240** = "0" to disable this function.	207
	The motor noise increases due to activation of the carrier frequency automatic reduction function when the motor is driven overloaded.	Reduce the load. Disable the automatic reduction function by setting **Pr.260 PWM frequency automatic switchover** = "0". (As the load remains excessive, overload may cause a protective function E.THT.)	207
	Resonance occurs. (output frequency)	Set **Pr.31 to Pr.36, and Pr.552 (frequency jump)**. When it is desired to avoid resonance attributable to the natural frequency of a mechanical system, these parameters allow resonant frequencies to be jumped.	272
	Resonance occurs. (carrier frequency)	Change the **Pr.72 PWM frequency selection** setting. Changing the PWM carrier frequency produces an effect on avoiding the resonance frequency of a mechanical system or a motor.	207
	Auto tuning is not performed under Advanced magnetic flux vector control.	Perform offline auto tuning	366
	Gain adjustment during PID control is insufficient.	To stabilize the measured value, change the proportional band (**Pr.129**) to a larger value, the integral time (**Pr.130**) to a slightly longer time, and the differential time (**Pr.134**) to a slightly shorter time. Check the calibration of set point and measured value.	401
	The gain is too high under PM motor control.	Check the settings of **Pr.820 Speed control P gain 1** and **Pr.824 Torque control P gain 1 (current loop proportional gain)**.	182
Others	Mechanical looseness	Adjust machine/equipment so that there is no mechanical looseness.	—
	Contact the motor manufacturer.		
Motor	Operating with output phase loss	Check the motor wiring.	—

上正科技有限公司
購買、維修、改造伺服系統
電話：037-466233
Email：service@repairtw.com
Line id：@2222
www.repairtw.com

6.6.3 Inverter generates abnormal noise

Check point	Possible cause	Countermeasure	Refer to page
Fan	The fan cover was not correctly installed when a cooling fan was replaced.	Install the fan cover correctly.	601

6.6.4 Motor generates heat abnormally

Check point	Possible cause	Countermeasure	Refer to page
Motor	The motor fan is not working. (Dust is accumulated.)	Clean the motor fan. Improve the environment.	—
	Phase to phase insulation of the motor is insufficient.	Check the insulation of the motor.	—
Main circuit	The inverter output voltage (U, V, W) are unbalanced.	Check the output voltage of the inverter. Check the insulation of the motor.	606
Parameter setting	The **Pr.71 Applied motor** setting is incorrect.	Check the **Pr.71 Applied motor** setting.	362
—	Motor current is too large	Refer to "6.6.11 Motor current is too large".	591

6.6.5 Motor rotates in the opposite direction

Check point	Possible cause	Countermeasure	Refer to page
Main circuit	The phase sequence of output terminals U, V and W is incorrect.	Connect the output side terminals (terminals U, V, and W) correctly.	48
Input signal	The start signals (STF and STR signals) are connected improperly.	Check the connection. (STF: forward rotation, STR: reverse rotation)	58, 359
	The polarity of the frequency command is negative during the polarity reversible operation set by **Pr.73 Analog input selection**.	Check the polarity of the frequency command.	330

6.6.6 Speed greatly differs from the setting

Check point	Possible cause	Countermeasure	Refer to page
Input signal	The frequency setting signal is incorrect.	Measure the input signal level.	—
	The input signal lines are affected by external EMI.	Take countermeasures against EMI, such as using shielded wires for input signal lines.	86
Parameter setting	**Pr.1 Maximum frequency, Pr.2 Minimum frequency, Pr.18 High speed maximum frequency**, and the **calibration parameter C2 to C7** settings are not appropriate.	Check the settings of **Pr.1, Pr.2**, and **Pr.18**.	271
		Check the **calibration parameter C2 to C7** settings.	339
	Pr.31 to Pr.36, and **Pr.552** (frequency jump) settings are not appropriate.	Narrow down the range of frequency jump.	272
Load	Stall prevention function is activated due to a heavy load.	Reduce the load weight.	—
Parameter setting		Set **Pr.22 Stall prevention operation level** higher according to the load. (If **Pr.22** is set too high, an overcurrent trip (E.OC[]) is likely to occur.)	273
Motor		Check the capacities of the inverter and the motor.	—

上正科技有限公司
購買、維修 此手冊零組件
電話： 037-466333
Email: service@repairtw.com
Line id: @zzzz
www.repairtw.com

6.6.7 Acceleration/deceleration is not smooth

Check point	Possible cause	Countermeasure	Refer to page
Parameter setting	The acceleration/deceleration time is too short.	Increase the acceleration/deceleration time.	216
	The torque boost (**Pr.0, Pr.46**) setting is not appropriate under V/F control, so the stall prevention function is activated.	Increase/decrease the **Pr.0 Torque boost** setting value by 0.5% increments so that stall prevention does not occur.	527
	The base frequency does not match the motor characteristics.	Under V/F control, set **Pr.3 Base frequency** and **Pr.47 Second V/F (base frequency)**.	528
		Under Advanced magnetic flux vector control or PM motor control, set **Pr.84 Rated motor frequency**.	169
	Regeneration avoidance operation is performed.	If the frequency becomes unstable during regeneration avoidance operation, decrease the setting of **Pr.886 Regeneration avoidance voltage gain**.	545
Load	Stall prevention function is activated due to a heavy load.	Reduce the load weight.	—
Parameter setting		Set **Pr.22 Stall prevention operation level** higher according to the load. (If **Pr.22** is set too high, an overcurrent trip (E.OC[]) is likely to occur.)	273
Motor		Check the capacities of the inverter and the motor.	—

6.6.8 Speed varies during operation

Under Advanced magnetic flux vector control, the output frequency varies between 0 and 2 Hz as the load fluctuates. This is a normal operation and not a fault.

Check point	Possible cause	Countermeasure	Refer to page
Load	The load varies during an operation.	Select Advanced magnetic flux vector control.	169
Input signal	The frequency setting signal is varying.	Check the frequency setting signal.	—
	The frequency setting signal is affected by EMI.	Set filter to the analog input terminal using **Pr.74 Input filter time constant, Pr.822 Speed setting filter 1**, etc.	337
		Take countermeasures against EMI, such as using shielded wires for input signal lines.	86
	A malfunction is occurring due to the undesirable current generated when the transistor output unit is connected.	Use terminal PC (terminal SD when source logic) as a common terminal to prevent a malfunction caused by undesirable current.	63
	A multi-speed command signal is chattering.	Take countermeasures to suppress chattering.	—
Parameter setting	Fluctuation of power supply voltage is too large.	Under V/F control, change the **Pr.19 Base frequency voltage** setting (approximately by 3%).	528
	The **Pr.80 Motor capacity** and **Pr.81 Number of motor poles** settings are not appropriate for the motor capacity under Advanced magnetic flux vector control or PM motor control.	Check the settings of **Pr.80** and **Pr.81**.	169
	Wiring length exceeds 30 m when Advanced magnetic flux vector control or PM motor control is performed.	Perform offline auto tuning	366
	Under V/F control, wiring is too long and a voltage drop occurs.	In the low-speed range, adjust the **Pr.0 Torque boost** setting by 0.5% increments.	527
		Change the control method to Advanced magnetic flux vector control.	169
	Hunting occurs by the generated vibration, for example, when structural rigidity of the load is insufficient.	Disable automatic control functions, such as energy saving operation, fast-response current limit function, regeneration avoidance function, Advanced magnetic flux vector control, stall prevention, and online auto tuning. For PID control, set smaller values to **Pr.129 PID proportional band** and **Pr.130 PID integral time**. Lower the control gain to increase the stability.	—
		Change the **Pr.72 PWM frequency selection** setting.	207

上正科技有限公司
購買、維修、工手冊零組件
電話：037-466333
Email: service@repairtw.com
Line ID: @3333
www.repairtw.com

6.6.9 Operation mode is not changed properly

Check point	Possible cause	Countermeasure	Refer to page
Input signal	The start signal (STF or STR) is ON.	Check that the STF and STR signals are OFF. When either is ON, the operation mode cannot be changed.	58, 359
Parameter setting	The **Pr.79 Operation mode selection** setting is not appropriate.	When the **Pr.79** is set to "0 (initial value)", the operation mode is the External operation mode at power ON. To switch to the PU operation mode, press the PU/EXT key on the operation panel (press the PU key on the parameter unit (FR-PU07)). At other settings (1 to 4, 6, 7), the operation mode is limited accordingly.	228
	Operation mode and a writing device do not correspond.	Check **Pr.79 Operation mode selection, Pr.338 Communication operation command source, Pr.339 Communication speed command source, Pr.550 NET mode operation command source selection** and **Pr.551 PU mode operation command source selection**, and select an operation mode suitable for the purpose.	228, 239

6.6.10 Operation panel (FR-DU08) display is not operating

Check point	Possible cause	Countermeasure	Refer to page
Main circuit Control circuit	The power is not input.	Input the power.	43
Front cover	The operation panel is not properly connected to the inverter.	Check if the inverter front cover is installed securely.	30

6.6.11 The motor current is too large

Check point	Possible cause	Countermeasure	Refer to page
Parameter setting	The torque boost (**Pr.0, Pr.46**) setting is not appropriate under V/F control, so the stall prevention function is activated.	Increase/decrease the **Pr.0 Torque boost** setting value by 0.5% increments so that stall prevention does not occur.	527
	The V/F pattern is not appropriate when V/F control is performed. (**Pr.3, Pr.14, Pr.19**)	Set the rated frequency of the motor to **Pr.3 Base frequency**. Use **Pr.19 Base frequency voltage** to set the base voltage (for example, rated motor voltage).	528
		Change the **Pr.14 Load pattern selection** setting according to the load characteristic.	530
	Stall prevention function is activated due to a heavy load.	Reduce the load weight.	—
		Set **Pr.22 Stall prevention operation level** higher according to the load. (If **Pr.22** is set too high, an overcurrent trip (E.OC[]) is likely to occur.)	273
		Check the capacities of the inverter and the motor.	—
	Offline auto tuning is not performed under Advanced magnetic flux vector control.	Perform offline auto tuning.	366
	When PM motor control is selected for a PM motor other than the MM-EFS or MM-THE4, offline auto tuning is not performed.	Perform offline auto tuning for a PM motor.	375

上正科技有限公司
購買、維修、出租電腦零組件
電話: 037-466333
Email: service@repairtw.com
Line id: @zzzz
www.repairtw.com

6.6.12 Speed does not accelerate

Check point	Possible cause	Countermeasure	Refer to page
Input signal	The start command or frequency command is chattering.	Check if the start command and the frequency command are correct.	—
	The wiring length is too long for the analog frequency command, causing a voltage (current) drop.	Perform the bias and gain calibration for the analog input.	339
	The input signal lines are affected by external EMI.	Take countermeasures against EMI, such as using shielded wires for input signal lines.	86
Parameter setting	**Pr.1 Maximum frequency, Pr.2 Minimum frequency, Pr.18 High speed maximum frequency**, and the **calibration parameter C2 to C7** settings are not appropriate.	Check the **Pr.1** and **Pr.2** settings. To operate at 120 Hz or higher, set **Pr.18**.	271
		Check the **calibration parameter C2 to C7** settings.	339
	The maximum voltage (current) input value is not set during the External operation. (**Pr.125, Pr.126, Pr.18**)	Check the settings of **Pr.125 Terminal 2 frequency setting gain frequency** and **Pr.126 Terminal 4 frequency setting gain frequency**. To operate at 120 Hz or higher, set **Pr.18 High speed maximum frequency**.	271, 339
	The torque boost (**Pr.0, Pr.46**) setting is not appropriate under V/F control, so the stall prevention function is activated.	Increase/decrease the **Pr.0 Torque boost** setting value by 0.5% increments so that stall prevention does not occur.	527
	The V/F pattern is not appropriate when V/F control is performed. (**Pr.3, Pr.14, Pr.19**)	Set the rated frequency of the motor to **Pr.3 Base frequency**. Use **Pr.19 Base frequency voltage** to set the base voltage (for example, rated motor voltage).	528
		Change the **Pr.14 Load pattern selection** setting according to the load characteristic.	530
	Stall prevention function is activated due to a heavy load.	Reduce the load weight.	—
		Set **Pr.22 Stall prevention operation level** higher according to the load. (If **Pr.22** is set too high, an overcurrent trip (E.OC[]) is likely to occur.)	273
		Check the capacities of the inverter and the motor.	—
	Auto tuning is not performed under Advanced magnetic flux vector control.	Perform offline auto tuning	366
	The setting of pulse train input is not appropriate.	Check the specification of the pulse generator (open collector output or complementary output) and check the adjustment of the pulse train and frequency (**Pr.385 Frequency for zero input pulse** and **Pr.386 Frequency for maximum input pulse**).	245
	During PID control, the output frequency is automatically controlled so that the measured value equals the set point.		401

上正科技有限公司
購買、維修 此手冊零組件
電話：037-466333
Email: service@repairtw.com
Line id: @zzzz
www.repairtw.com

6.6.13 Unable to write parameter setting

Check point	Possible cause	Countermeasure	Refer to page
Input signal	Operation is being performed (the STF or STR signal is ON).	Stop the operation. When **Pr.77 Parameter write selection** = "0 (initial value)", writing is enabled only during a stop.	196
Parameter setting	Parameter setting was attempted in the External operation mode.	Choose the PU operation mode. Or, set **Pr.77 Parameter write selection** = "2" to enable parameter writing regardless of the operation mode.	196, 228
	Parameter write is disabled by the **Pr.77 Parameter write selection** setting.	Check the **Pr.77** setting.	196
	The key lock mode is enabled by the **Pr.161 Frequency setting/key lock operation selection** setting.	Check the **Pr.161** setting.	192
	Operation mode and a writing device do not correspond.	Check **Pr.79, Pr.338, Pr.339, Pr.550**, and **Pr.551**, and select an operation mode suitable for the purpose.	228, 239
	Under PM motor control, setting "25" in **Pr.72 PWM frequency selection** was attempted. Or, setting PM motor control was attempted while **Pr.72** = "25".	Under PM motor control, "25" cannot be set in **Pr.72**. (A sine wave filter (MT-BSL/BSC) cannot be used under PM motor control.)	207

6.6.14 Power lamp is not lit

Check point	Possible cause	Countermeasure	Refer to page
Main circuit Control circuit	The wiring or installation is inadequate.	Check for secure wiring and installation. The power lamp is lit when power is supplied to the control circuit (R1/L11, S1/L21).	47

上正科技有限公司
購買、維修 此手冊零組件
電話： 037-466333
Email: service@repairtw.com
Line id: @zzzz
www.repairtw.com

MEMO

上正科技有限公司
購買、維修 此手冊零組件
電話： 037-466333
Email: service@repairtw.com
Line id: @zzzz
www.repairtw.com

CHAPTER 7 PRECAUTIONS FOR MAINTENANCE AND INSPECTION

7.1 Inspection item.....596
7.2 Measurement of main circuit voltages, currents, and powers.....606

上正科技有限公司
購買、維修 此手冊零組件
電話： 037-466333
Email: service@repairtw.com
Line id: @zzzz
www.repairtw.com

7 PRECAUTIONS FOR MAINTENANCE AND INSPECTION

This chapter explains the precautions for maintenance and inspection of this product.
Always read the instructions before use.
For the precautions for maintenance and inspection of the separated converter type inverter, refer to the FR-F802 (Separated Converter Type) Instruction Manual (Hardware).
For the precautions for maintenance and inspection of the IP55 compatible model inverter, refer to the FR-F806 (IP55/UL Type 12 specification) Instruction Manual (Hardware).

7.1 Inspection item

The inverter is a static unit mainly consisting of semiconductor devices. Daily inspection must be performed to prevent any fault from occurring due to the adverse effects of the operating environment, such as temperature, humidity, dust, dirt and vibration, changes in the parts with time, service life, and other factors.

◆ Precautions for maintenance and inspection

When accessing the inverter for inspection, wait for at least 10 minutes after the power supply has been switched OFF. Then, make sure that the voltage across the main circuit terminals P/+ and N/- on the inverter is not more than 30 VDC using a tester, etc.

上正科技有限公司
購買、維修 此手冊零組件
電話: 037-466333
Email: service@repairtw.com
Line id: @zzzz
www.repairtw.com

7.1.1 Daily inspection

Basically, check for the following faults during operation.

- Motor operation fault
- Improper installation environment
- Cooling system fault
- Abnormal vibration, abnormal noise
- Abnormal overheat, discoloration

7.1.2 Periodic inspection

Check the areas inaccessible during operation and requiring periodic inspection. Consult us for periodic inspection.

Check and clean the cooling system:	Clean the air filter, etc.
Check the tightening and retighten:	The screws and bolts may become loose due to vibration, temperature changes, etc. Check and tighten them. Tighten them according to the specified tightening torque. (Refer to page 50.)

Check the conductors and insulating materials for corrosion and damage.
Measure the insulation resistance.
Check and change the cooling fan and relay.

NOTE

- When using the safety stop function, periodic inspection is required to confirm that safety function of the safety system operates correctly. For more details, refer to the Safety Stop Function Instruction Manual.

7.1.3 Daily and periodic inspection

Area of inspection	Inspection item	Description	Inspection interval		Corrective action at fault occurrence	Check by user
			Daily	Periodic[*3]		
General	Surrounding environment	Check the surrounding air temperature, humidity, dirt, corrosive gas, oil mist, etc.	○		Improve the environment.	
	Overall unit	Check for unusual vibration and noise.	○		Check fault location and retighten.	
		Check for dirt, oil, and other foreign material.[*1]	○		Clean.	
	Power supply voltage	Check that the main circuit voltage and control circuit voltage are normal.[*2]	○		Inspect the power supply.	
Main circuit	General	• Check with megger (between main circuit terminals and earth (ground) terminal). • Check for loose screws and bolts. • Check for overheat traces on the parts. • Check for stains.		○ ○ ○ ○	Contact the manufacturer. Retighten. Contact the manufacturer. Clean.	
	Conductors and cables	• Check conductors for distortion. • Check cable sheaths for breakage and deterioration (crack, discoloration, etc.).		○ ○	Contact the manufacturer. Contact the manufacturer.	
	Transformer/ reactor	Check for unusual odor and abnormal increase of whining sound.	○		Stop the equipment and contact the manufacturer.	
	Terminal block	Check for a damage.		○	Stop the equipment and contact the manufacturer.	
	Smoothing aluminum electrolytic capacitor	• Check for liquid leakage. • Check for safety valve projection and bulge. • Visual check and judge by the life check of the main circuit capacitor. (Refer to page 599.)		○ ○ ○	Contact the manufacturer. Contact the manufacturer.	
	Relay/contactor	Check that the operation is normal and no chattering sound is heard.		○	Contact the manufacturer.	
Protection circuit Control circuit	Operation check	• Check for an output voltage imbalance between phases while operating the inverter alone. • Check that no fault is found in protective and display circuits in a sequence protective operation test.		○ ○	Contact the manufacturer. Contact the manufacturer.	
	Components check: Overall	• Check for unusual odor and discoloration. • Check for serious rust development.		○ ○	Stop the equipment and contact the manufacturer. Contact the manufacturer.	
	Components check: Aluminum electrolytic capacitor	• Check for liquid leakage in a capacitor and deformation trace. • Visual check and judge by the life check of the control circuit capacitor. (Refer to page 599.)		○ ○	Contact the manufacturer.	
Cooling system	Cooling fan	• Check for unusual vibration and noise. • Check for loose screws and bolts. • Check for stains.	○	 ○ ○	Replace the fan. Fix with the fan cover fixing screws. Clean.	
	Heatsink	• Check for clogging. • Check for stains.		○ ○	Clean. Clean.	

上正科技有限公司
購買、維修 此手冊零組件
電話： 037-466333
Email: service@repairtw.com
Line id: @zzz
www.repairtw.com

Area of inspection	Inspection item	Description	Inspection interval		Corrective action at fault occurrence	Check by user
			Daily	Periodic*3		
Display	Indication	• Check that indications are correct. • Check for stains.	○	○	Contact the manufacturer. Clean.	
	Meter/counter	Check that readouts are correct.	○		Stop the equipment and contact the manufacturer.	
Load motor	Operation check	Check for vibration and abnormal increase in operation noise.	○		Stop the equipment and contact the manufacturer.	

*1 Oil component of the heat dissipation grease used inside the inverter may leak out. The oil component, however, is not flammable, corrosive, nor conductive and is not harmful to humans. Wipe off such oil component.

*2 It is recommended to install a voltage monitoring device for checking the voltage of the power supplied to the inverter.

*3 One to two years of periodic inspection cycle is recommended. However, it differs according to the installation environment. Consult us for periodic inspection.

NOTE

- Continuous use of a leaked, deformed, or degraded smoothing aluminum electrolytic capacitor (as shown in the table above) may lead to a burst, breakage, or fire. Replace such capacitor without delay.

7.1.4 Checking the inverter and converter modules

◆ Preparation

- Disconnect the external power supply cables (R/L1, S/L2, T/L3) and motor cables (U, V, W).
- Prepare a continuity tester. (For the resistance measurement, use the 100 Ω range.)

上正科技有限公司
購買、維修 此手冊零組件
電話： 037-466333
Email: service@repairtw.com
Line id: @zzzz
www.repairtw.com

◆ Checking method

Change the polarity of the tester alternately at the inverter terminals R/L1, S/L2, T/L3, U, V, W, P/+, and N/- and check the electric continuity.

NOTE

- Before measurement, check that the smoothing capacitor is discharged.
- At the time of electric discontinuity, the measured value is almost ∞. When there is an instantaneous electric continuity, due to the smoothing capacitor, the tester may not indicate ∞. At the time of electric continuity, the measured value is several Ω to several tens of Ω. When all measured values are almost the same (although values may not be constant depending on the tester type), it shows that there are no electrical paths with problems.

◆ Module device numbers and terminals to be checked

		Tester polarity		Continuity		Tester polarity		Continuity
		⊕	⊖			⊕	⊖	
Converter module	D1	R/L1	P/+	No	D4	R/L1	N/-	Yes
		P/+	R/L1	Yes		N/-	R/L1	No
	D2	S/L2	P/+	No	D5	S/L2	N/-	Yes
		P/+	S/L2	Yes		N/-	S/L2	No
	D3	T/L3	P/+	No	D6	T/L3	N/-	Yes
		P/+	T/L3	Yes		N/-	T/L3	No
Inverter module	TR1	U	P/+	No	TR4	U	N/-	Yes
		P/+	U	Yes		N/-	U	No
	TR3	V	P/+	No	TR6	V	N/-	Yes
		P/+	V	Yes		N/-	V	No
	TR5	W	P/+	No	TR2	W	N/-	Yes
		P/+	W	Yes		N/-	W	No

(Assuming that an analog meter is used.)

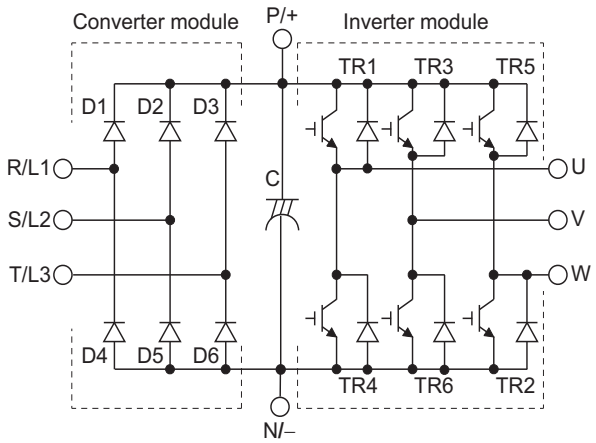

7.1.5 Cleaning

Always run the inverter in a clean status.

When cleaning the inverter, gently wipe dirty areas with a soft cloth immersed in neutral detergent or ethanol.

NOTE

- Do not use solvent, such as acetone, benzene, toluene and alcohol, as these will cause the inverter surface paint to peel off.
- The display, etc. of the operation panel (FR-DU08) and parameter unit (FR-PU07) are vulnerable to detergent and alcohol. Therefore, avoid using them for cleaning.

上正科技有限公司
購買、維修 此手冊零組件
電話： 037-466333
Email: service@repairtw.com
Line id: @zzzz
www.repairtw.com

7.1.6 Replacement of parts

The inverter consists of many electronic parts such as semiconductor devices.

The following parts may deteriorate with age because of their structures or physical characteristics, leading to reduced performance or fault of the inverter. For preventive maintenance, the parts must be replaced periodically.

Use the life check function as a guidance of parts replacement.

Part name	Estimated lifespan *1	Description
Cooling fan	10 years	Replace (as required)
Main circuit smoothing capacitor	10 years *2	Replace (as required)
On-board smoothing capacitor	10 years *2	Replace the board (as required).
Relays	—	As required
Main circuit fuse inside the inverter (FR-F840-04320(185K) or higher)	10 years	Replace (as required)

*1 Estimated lifespan for when the yearly average surrounding air temperature is 40°C. (without corrosive gas, flammable gas, oil mist, dust and dirt etc.)

*2 Output current: 80% of the inverter rating

NOTE

- For parts replacement, contact the nearest Mitsubishi FA center.

◆ Inverter parts life display

The inverter diagnoses the main circuit capacitor, control circuit capacitor, cooling fan, and inrush current limit circuit by itself and estimates their lives.

The self-diagnostic warning is output when the life span of each part is near its end. It gives an indication of replacement time.

Guideline for life judgment using the life warning output

Part	Judgment level
Main circuit capacitor	85% of the initial capacity
Control circuit capacitor	Estimated remaining life 10%
Inrush current limit circuit	Estimated remaining life 10% (Power ON: 100,000 times left)
Cooling fan	Less than 50% of the specified speed*1

*1 Initial values differ according to the inverter capacity (Refer to page 211 for details.)

NOTE

- Refer to page 208 to perform the life check of the inverter parts.

上正科技有限公司
購買、維修 此手冊零組件
電話： 037-466333
Email: service@repairtw.com
Line id: @zzzz
www.repairtw.com

◆ Replacement procedure of the cooling fan

The replacement interval of the cooling fan used for cooling the parts generating heat such as the main circuit semiconductor is greatly affected by the surrounding air temperature. When unusual noise and/or vibration are noticed during inspection, the cooling fan must be replaced immediately.

■ Removal (FR-F820-00105(2.2K) to 04750(110K), FR-F840-00083(3.7K) to 03610(160K))

1. **Push the hooks from above and remove the fan cover.**

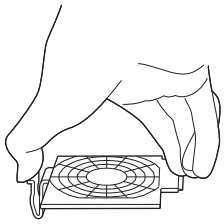

FR-F820-00105(2.2K) to 00250(5.5K)
FR-F840-00083(3.7K), 00126(5.5K)

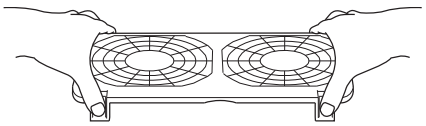

FR-F820-00340(7.5K) to 01540(37K)
FR-F840-00170(7.5K) to 00770(37K)

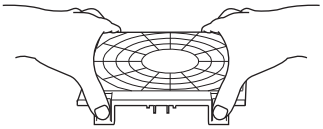

FR-F820-01870(45K) or higher
FR-F840-00930(45K) to 03610(160K)

2. Disconnect the fan connectors.

3. Remove the fan.

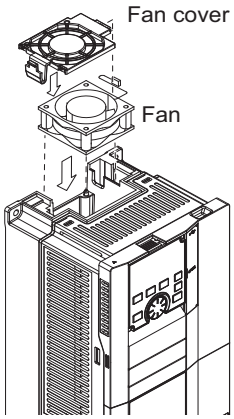

FR-F820-00105(2.2K) to 00250(5.5K)
FR-F840-00083(3.7K), 00126(5.5K)

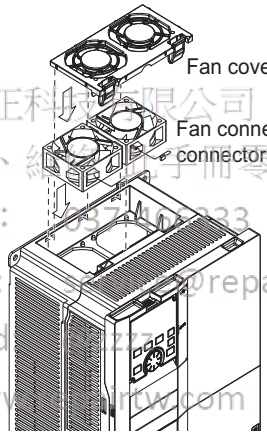

FR-F820-00340(7.5K) to 01540(37K)
FR-F840-00170(7.5K) to 00770(37K)

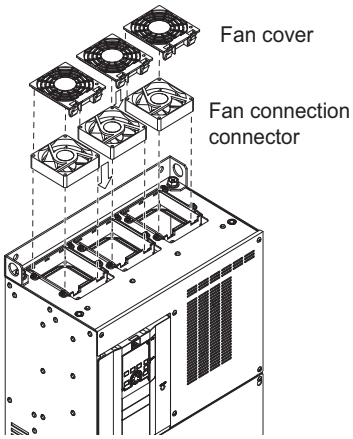

FR-F820-01870(45K) or higher
FR-F840-00930(45K) to 03610(160K)

*1 The number of cooling fans differs according to the inverter capacity.

上正科技有限公司
購買、維修電子零組件
電話：
Email:
repairtw.com
Line id
www.repairtw.com

■ Installation (FR-F820-00105(2.2K) to 04750(110K), FR-F840-00083(3.7K) to 03610(160K))

1. After confirming the orientation of the fan, install the fan so that the "AIR FLOW" arrow faces up.

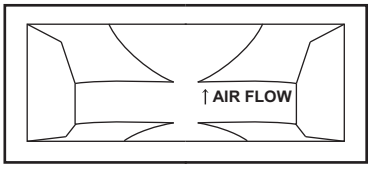

<Fan side face>

2. Connect the fan connectors.

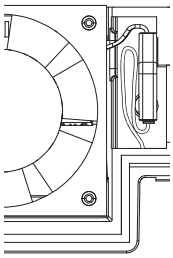

FR-F820-00105(2.2K) to 00250(5.5K)
FR-F840-00083(3.7K), 00126(5.5K)

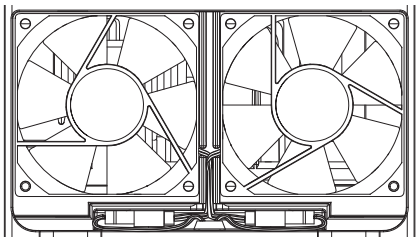

FR-F820-00340(7.5K) to 00770(18.5K)
FR-F840-00170(7.5K) to 00380(18.5K)

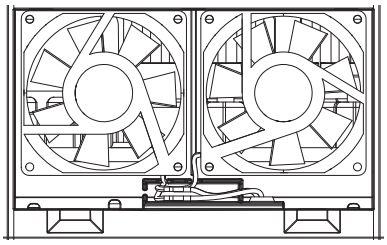

FR-F820-00930(22K), 01250(30K)
FR-F840-00470(22K), 00620(30K)

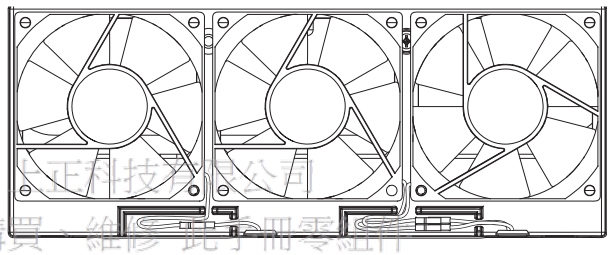

FR-F820-01540(37K)
FR-F840-00770(37K)

台正科技有限公司
購買、維修 跑手機零組件
電話：0917166333
Email：service@repairtw.com
Line id：@zzzz
www.repairtw.com

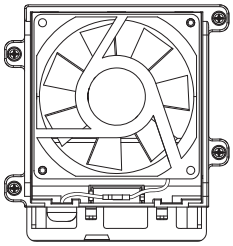

FR-F820-01870(45K), 02330(55K)
FR-F840-00930(45K) to 01800(75K)

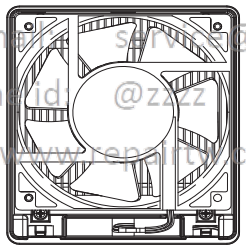

FR-F820-03160(75K) or higher
FR-F840-02160(90K) to 03610(160K)

3. Install the fan cover.

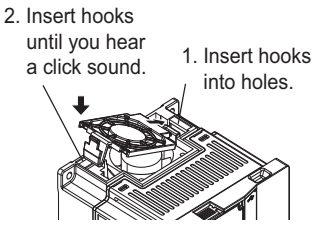

FR-F820-00105(2.2K) to 00250(5.5K)
FR-F840-00083(3.7K), 00126(5.5K)

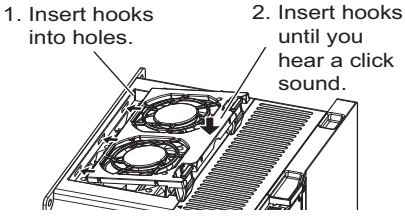

FR-F820-00340(7.5K) to 01540(37K)
FR-F840-00170(7.5K) to 00770(37K)

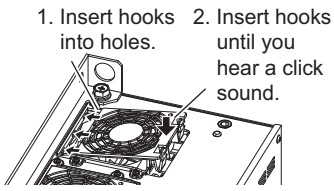

FR-F820-01870(45K) or higher
FR-F840-00930(45K) to 03610(160K)

NOTE

- Installing the fan in the opposite direction of air flow may shorten the inverter life.
- Ensure that the cables are not caught when the fan is installed.
- Switch OFF the power before starting the fan replacement work. To prevent an electric shock accident, keep the inverter with its covers on during fans replacement since the inverter circuits are charged with voltage even after power OFF.

■ Removal (FR-F840-04320(185K) or higher)

1. Remove the fan cover fixing screws, and remove the fan cover.
2. Disconnect the fan connector and remove the fan block.
3. Remove the fan fixing screws, and remove the fan.

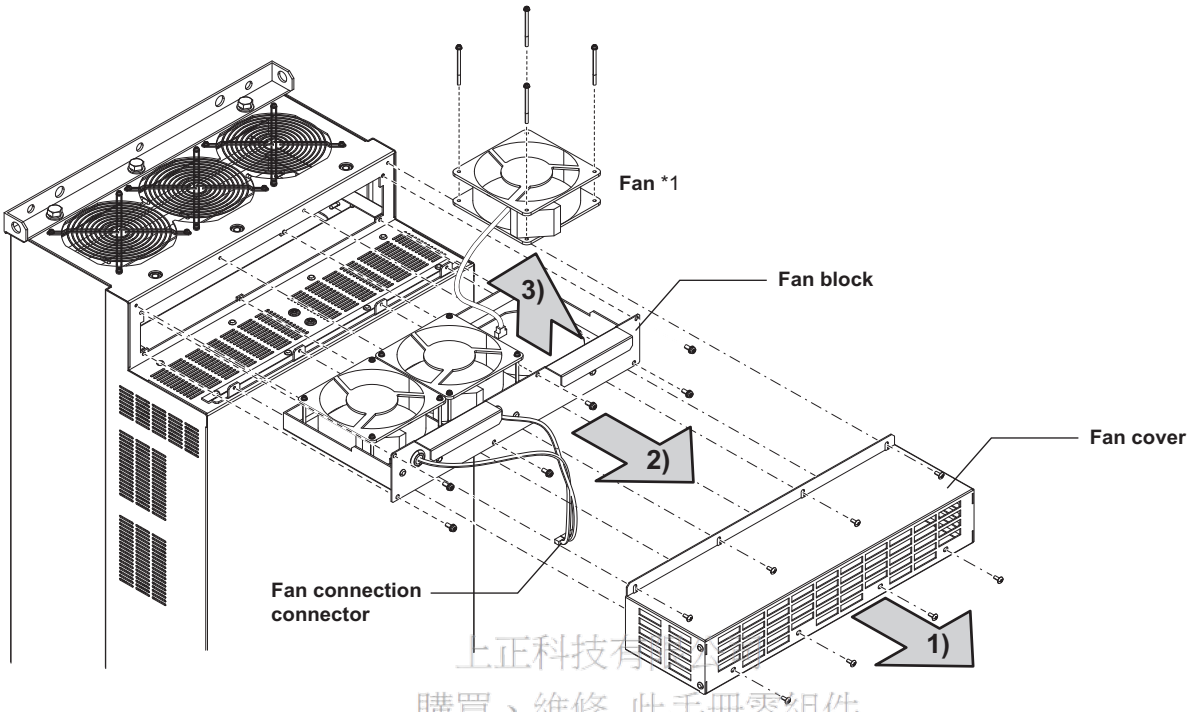

*1 The number of cooling fans differs according to the inverter capacity.

上正科技有限公司
購買、維修 此手冊零組件
電話 0974466333
Email: service@repairtw.com
Line id: @zzzz
www.repairtw.com

■ Installation (FR-F840-04320(185K) or higher)

1. After confirming the orientation of the fan, install the fan so that the "AIR FLOW" arrow faces up.

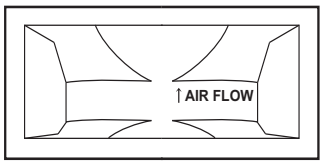

<Fan side face>

2. Install fans referring to the above figure.

NOTE

- Installing the fan in the opposite direction of air flow may shorten the inverter life.
- Ensure that the cables are not caught when the fan is installed.
- Switch OFF the power before starting the fan replacement work. To prevent an electric shock accident, keep the inverter with its covers on during fans replacement since the inverter circuits are charged with voltage even after power OFF.

◆ Smoothing capacitors

A large-capacity aluminum electrolytic capacitor is used for smoothing in the main circuit DC section, and an aluminum electrolytic capacitor is used for stabilizing the control power in the control circuit. Their characteristics are deteriorated by the adverse effects of ripple currents, etc. The replacement intervals greatly vary with the surrounding air temperature and operating conditions. When the inverter is operated in air-conditioned, normal environment conditions, replace the capacitors about every 10 years.

The appearance criteria for inspection are as follows:

- Case: Check the side and bottom faces for expansion.
- Sealing plate: Check for a remarkable warp and extreme crack.
- Check for an external crack, discoloration, liquid leakage, etc. Judge that the capacitor has reached its life when the measured capacitance of the capacitor reduced below 80% of the rating.

NOTE

- The inverter diagnoses the main circuit capacitor and control circuit capacitor by itself and can judge their lives. (Refer to page 208.)

◆ For relay output terminal

- To prevent a contact fault, etc., relays must be replaced according to the cumulative number of switching times (switching life).
- The control terminal block must be replaced (refer to page 605) in case of failure of either relay between the relay output terminals C1 and B1 or A1, or terminals C2 and B2 or A2. (After replacing the control terminal block, connect the jumper connector to the correct position in accordance with the control logic of input signals. (Refer to page 62.))

上正科技有限公司
購買、維修 此手冊零組件
電話： 037-460333
Email: service@repairtw.com
Line id: @zzzz
www.repairtw.com

◆ Main circuit fuse inside the inverter (FR-F840-04320(185K) or higher)

Fuses are used in some inverters. The surrounding air temperature and operating condition affect the life of fuses. When the inverter is used in a normal air-conditioned environment, replace its fuse after about 10 years.

7.1.7 Removal and reinstallation of the control circuit terminal block

This product has a removable control circuit terminal block, which can be replaced with a new one or a control terminal option.

◆ Removal and reinstallation

1. Loosen the two installation screws at the both side of the control circuit terminal block. (These screws cannot be removed.)
Slide down the control circuit terminal block to remove it.

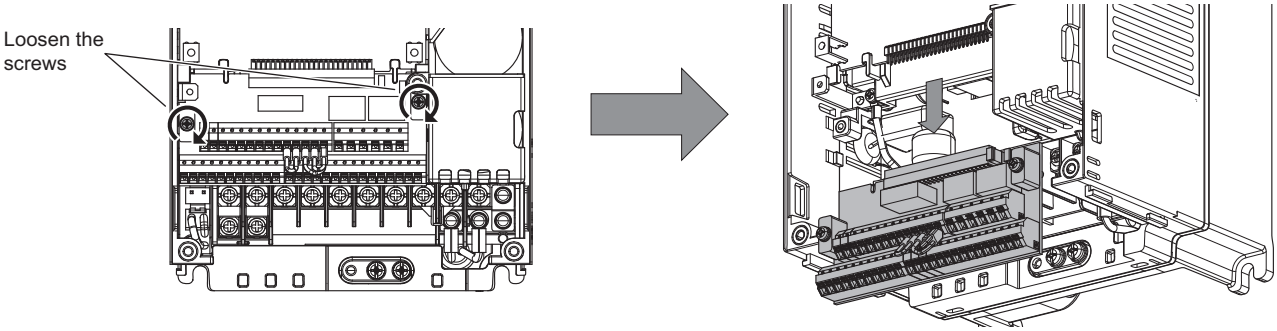

2. Be careful not to bend the pins of the inverter's control circuit connector, reinstall the control circuit terminal block and fix it with the mounting screws.

上正科技有限公司
購買、維修、出售電機件
電話： 037-466333
Line Id: @zzz
www.spairtw.com

NOTE

- Before starting the replacement, power OFF the inverter, wait for at least 10 minutes, and then check that the charge lamp is OFF to ensure safety.

◆ Removal and reinstallation precautions

The following are the precautions to remove or reinstall the control circuit terminal block. Observe the following precautions and handle the inverter properly to avoid malfunctions or failures.

- To remove or reinstall the control circuit terminal block, keep it upright so that it is parallel with the inverter.
- To install the control circuit terminal block, slide it upward so that the tongues on the inverter slot into the grooves on the terminal block.
- Check that the terminal block is parallel to the inverter and the pins on the inverter control circuit connector are not bent. After checking proper connection, fix the terminal block in place with two screws.

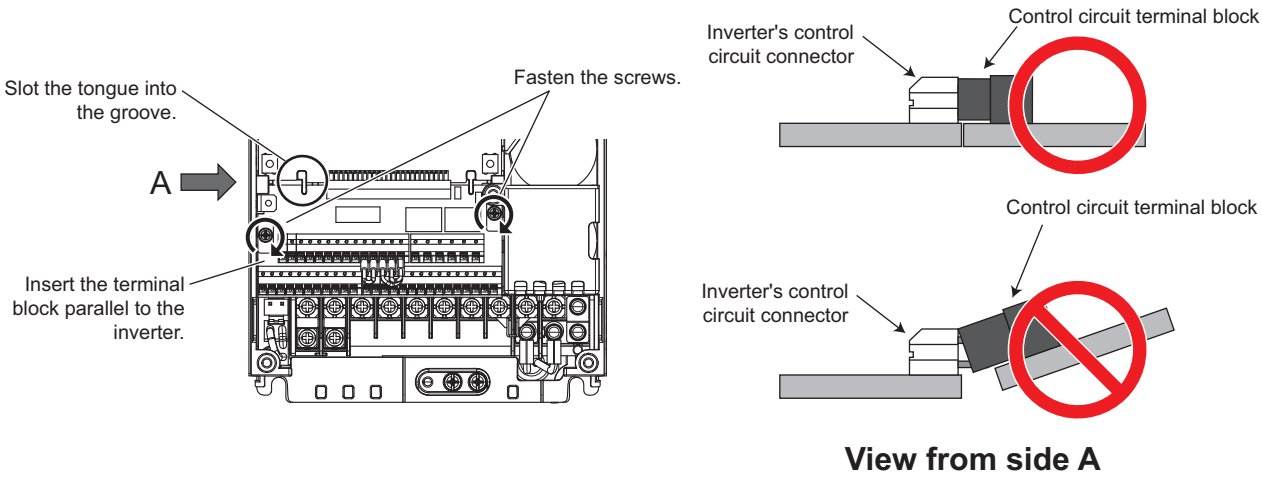

NOTE

- Do not tilt the terminal block while tightening the screws or removing it from the inverter. (Otherwise, a stress applied to the control circuit terminal block or the control circuit connector may cause damage to them.)
- After replacing the control terminal block, connect the jumper connector to the correct position in accordance with the control logic of input signals. (Refer to page 62.)

7.2 Measurement of main circuit voltages, currents, and powers

Since the voltages and currents on the inverter power supply and output sides include harmonics, measurement data depends on the instruments used and circuits measured. When instruments for commercial frequency are used for measurement, measure the following circuits with the instruments given on the next page.

NOTE

- When installing meters etc. on the inverter output side
  When the inverter-to-motor wiring length is long, especially in the 400 V class, small-capacity models, the meters and CTs may generate heat due to line-to-line leakage current. Therefore, choose the equipment which has enough allowance for the current rating.
  To measure and display the output voltage and output current of the inverter, it is recommended to use the terminal AM and FM/CA output functions of the inverter.

◆ Examples of measuring points and instruments

上正科技有限公司
購買、維修 此手冊零組件
電話： 037-466333
Email: service@repairtw.com
Line id: @zzzz
www.repairtw.com

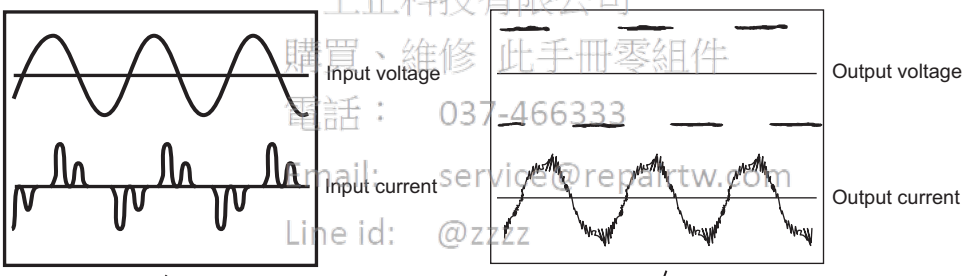

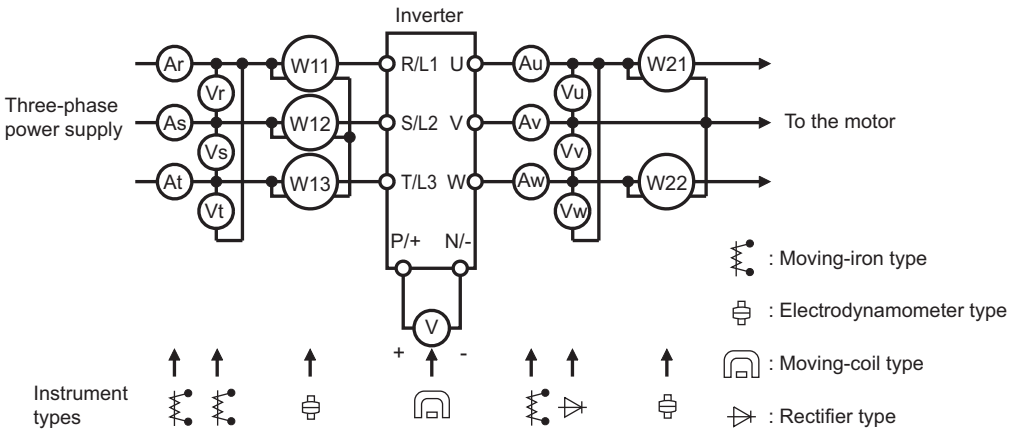

◆ Measuring points and instruments

Item	Measuring point	Measuring instrument	Remarks (reference measured value)
Input voltage V1	Between R/L1 and S/L2, S/L2 and T/L3, or T/L3 and R/L1	Moving-iron type AC voltmeter[*4]	Commercial power supply. Within permissible AC voltage fluctuation. (Refer to page 612.)
Input current I1	R/L1, S/L2, T/L3 line current	Moving-iron type AC ammeter[*4]	
Input power P1	R/L1, S/L2, or T/L3, and between R/L1 and S/L2, S/L2 and T/L3, or T/L3 and R/L1	Digital power meter (designed for inverter) or electrodynamic type single-phase wattmeter	P1 = W11 + W12 + W13 (3-wattmeter method)
Input power factor Pf1	Calculate after measuring input voltage, input current and input power. $Pf_1 = \frac{P_1}{\sqrt{3}V_1 \times I_1} \times 100\%$		
Output voltage V2	Between U and V, V and W, or W and U	Rectifier type AC voltmeter[*1*4] (moving-iron type cannot measure.)	Difference between the phases is within 1% of the maximum output voltage.
Output current I2	U, V, and W line currents	Moving-iron type AC ammeter[*2*4]	Difference between the phases is 10% or lower of the rated inverter current.
Output power P2	U, V, or W, and between U and V, or V and W	Digital power meter (designed for inverter) or electrodynamic type single-phase wattmeter	P2 = W21 + W22 2-wattmeter method (or 3-wattmeter method)
Output power factor Pf2	Calculate in similar manner to the input power factor. $Pf_2 = \frac{P_2}{\sqrt{3}V_2 \times I_2} \times 100\%$		
Converter output	Between P/+ and N/-	Moving-coil type (such as tester)	Inverter LED indication 1.35 × V1
Frequency setting signal	2, and between 4(+) and 5	Moving-coil type (such as tester) (internal resistance 50 kΩ or more)	0 to 10 VDC, 4 to 20 mA Terminal 5 is a common terminal.
	Between 1(+) and 5		0 to ±5 VDC and 0 to ±10 VDC
Power supply for a frequency setting potentiometer	Between 10(+) and 5		5.2 VDC
	Between 10E(+) and 5		10 VDC
Frequency meter signal	Between AM(+) and 5		Approximately 10 VDC at maximum frequency (without frequency meter)
	Between CA(+) and 5		Approximately 20 mADC at maximum frequency
	Between FM(+) and SD		Approximately 5 VDC at maximum frequency (without frequency meter) 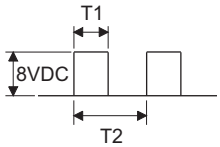 Pulse width T1: Adjust with **C0 (Pr.900)**. Pulse cycle T12 Set with **Pr.55** (for frequency monitor only). Terminal SD is a common terminal.
Start signal Select signal Reset signal Output stop signal	STF, STR, RH, RM, RL, JOG, RT, AU, STP (STOP), CS, RES, between MRS(+) and SD (for sink logic)		Voltage when terminal is open: 20 to 30 VDC ON voltage: 1 V or less
Fault signal	Between A1 and C1 Between B1 and C1	Moving-coil type (such as tester)	Continuity check[*3] [Normal] / [Fault] A1-C1: No / Yes B1-C1: Yes / No

*1 Use an FFT to measure the output voltage accurately. A tester or general measuring instrument cannot measure accurately.

*2 When the carrier frequency exceeds 5 kHz, do not use this instrument since using it may increase eddy current losses produced in metal parts inside the instrument, leading to burnout. In this case, use an approximate-effective value type.

*3 When the setting of **Pr.195 ABC1 terminal function selection** is the positive logic.

上正科技有限公司
購買 維修 此手冊零組件
電話: 037-466333
Email: service@repairtw.com
Line id: @zzzz
www.repairtw.com

*4 A digital power meter (designed for inverter) can also be used to measure.

7.2.1 Measurement of powers

Use digital power meters (for inverter) both on the inverter's input and output sides. Alternatively, use electrodynamic type single-phase wattmeters both on the inverter's input and output sides in the two-wattmeter or three-wattmeter method. As the current is liable to be imbalanced especially on the input side, it is recommended to use the three-wattmeter method.

Examples of measured value differences produced by different measuring meters are shown in the following figure.

An error will be produced by difference between measuring instruments, e.g. power calculation type and two- or three-wattmeter type three-phase wattmeter. When a CT is used in the current measuring side or when the meter contains a PT on the voltage measurement side, an error will also be produced due to the frequency characteristics of the CT and PT.

[Measurement conditions]

Constant output of 60 Hz or more frequency with a constant-torque (100%). The value obtained by the 3-wattmeter method with a 4-pole 3.7 kW induction motor is assumed to be 100%.

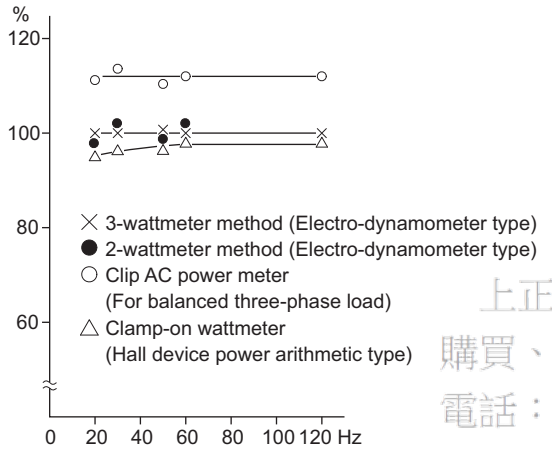

Example of measuring inverter input power

[Measurement conditions]

Constant output of 60 Hz or more frequency with a constant-torque (100%). The value obtained by the 3-wattmeter method with a 4-pole 3.7 kW induction motor is assumed to be 100%.

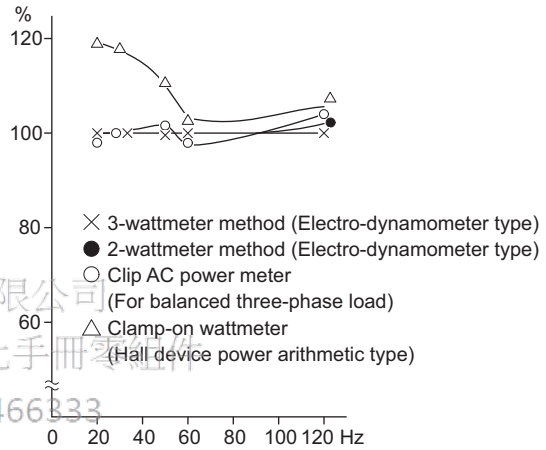

Example of measuring inverter output power

上正科技有限公司
購買、維修 此手冊零組件
電話： 037-466333
Email: service@repairtw.com
Line id: @zzzz
www.repairtw.com

7.2.2 Measurement of voltages and use of PT

◆ Inverter input side

As the input voltage has a sine wave and it is extremely small in distortion, accurate measurement can be made with an ordinary AC meter.

◆ Inverter output side

Since the output voltage has a PWM-controlled rectangular wave, always use a rectifier type voltmeter. A needle type tester cannot be used to measure the output voltage as it indicates a value much greater than the actual value. A moving-iron type meter indicates an effective value which includes harmonics and therefore the value is larger than that of the fundamental wave. The value monitored on the operation panel is the inverter-controlled voltage itself. Hence, that value is accurate and it is recommended to monitor values (analog output) using the operation panel.

◆ PT

No PT can be used on the output side of the inverter. Use a direct-reading meter. (A PT can be used on the input side of the inverter.)

7.2.3 Measurement of currents

Use moving-iron type meters both on the inverter's input and output sides. However, if the carrier frequency exceeds 5 kHz, do not use that meter since an overcurrent losses produced in the internal metal parts of the meter will increase and the meter may burn out. In this case, use an approximate-effective value type.

Since the inverter input current tends to be unbalanced, measurement of three phases is recommended. The correct value cannot be obtained by measuring only one or two phases. On the other hand, the unbalanced ratio of each phase of the output current should be within 10%.

When a clamp ammeter is used, always use an effective value detection type. A mean value detection type produces a large error and may indicate an extremely smaller value than the actual value. The value monitored on the operation panel is accurate if the output frequency varies, and it is recommended to monitor values (provide analog output) using the operation panel.

Examples of measured value differences produced by different measuring meters are as follows:

[Measurement conditions]

The value indicated on the moving-iron type ammeter is 100%.

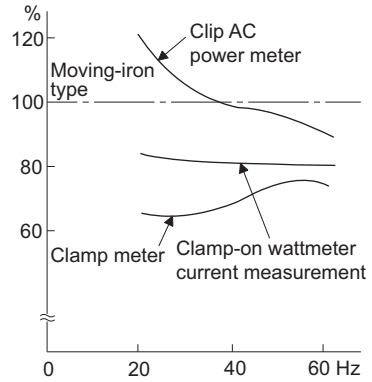

Example of measuring the inverter input current

[Measurement conditions]

The value indicated on the moving-iron type ammeter is 100%.

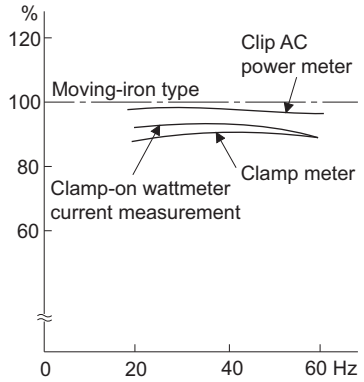

Example of measuring the inverter output current

上正科技有限公司
專業 維修 各廠商零組件
電話： 037-466333
Email: service@repairtw.com
Line id: @zzzz
www.repairtw.com

7.2.4 Use of CT and transducer

A CT may be used both on the inverter's input and output sides. Use the one with the largest possible VA ability because an error will increase if the frequency gets lower.

When using a transducer, use the effective value calculation type which is immune to harmonics.

7.2.5 Measurement of inverter input power factor

Calculate the factor from the effective power and the apparent power. A power-factor meter cannot indicate an exact value.

$$\text{Total power factor of the inverter} = \frac{\text{Effective power}}{\text{Apparent power}}$$

$$= \frac{\text{Three-phase input power found by the 3-wattmeter method}}{\sqrt{3}\times\text{V (power supply voltage)} \times \text{I (input current effective value)}}$$

7.2.6 Measurement of converter output voltage (between terminals P and N)

The output voltage of the converter can be measured with a moving-coil type meter (tester) between terminals P and N. The voltage varies according to the power supply voltage. Approximately 270 to 300 VDC (540 to 600 VDC for the 400 V class) is output when no load is connected. The voltage decreases when a load is applied.

When energy is regenerated from the motor during deceleration, for example, the converter output voltage rises to nearly 400 to 450 VDC (800 to 900 VDC for the 400 V class) maximum.

7.2.7 Measurement of inverter output frequency

In the initial setting of the FM type inverter, a pulse train proportional to the output frequency is output across the pulse train output terminals FM and SD on the inverter. This pulse train output can be counted by a frequency counter, or a meter (moving-coil type voltmeter) can be used to read the mean value of the pulse train output voltage. When a meter is used to measure the output frequency, approximately 5 VDC is indicated at the maximum frequency.

For detailed specifications of the pulse train output terminal FM, refer to page 302.

In the initial setting of the CA type inverter, a pulse train proportional to the output frequency is output across the analog current output terminals CA and 5 on the inverter. Measure the current using an ammeter or tester.
For detailed specifications of the analog current output terminal CA, refer to page 304.

7.2.8 Insulation resistance test using megger

- For the inverter, conduct the insulation resistance test on the main circuit only as follows and do not perform the test on the control circuit.
  (Use a 500 VDC megger.)

NOTE

- Before performing the insulation resistance test on the external circuit, disconnect the cables from all terminals of the inverter so that the test voltage is not applied to the inverter.
- For the continuity test of the control circuit, use a tester (high resistance range) and do not use the megger or buzzer.

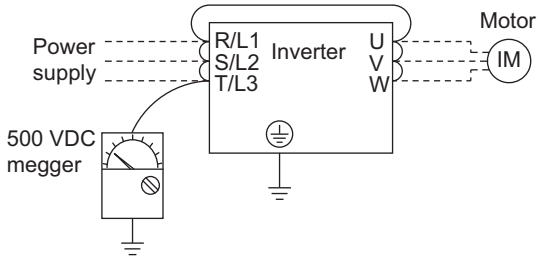

7.2.9 Pressure test

Do not conduct a pressure test. Deterioration may occur.

上正科技有限公司
購買、維修 此手冊零組件
電話： 037-466333
Email: service@repairtw.com
Line id: @zzzz
www.repairtw.com

CHAPTER 8 SPECIFICATIONS

8.1 Inverter rating....612
8.2 Motor rating....615
8.3 Common specifications....620
8.4 Outline dimension drawings....622

上正科技有限公司
購買、維修 此手冊零組件
電話： 037-466333
Email: service@repairtw.com
Line id: @zzzz
www.repairtw.com

8 SPECIFICATIONS

This chapter explains the specifications of this product.
Always read the instructions before use.
For the separated converter type inverter, refer to "SPECIFICATIONS" in the FR-F802 (Separated Converter Type) Instruction Manual (Hardware).
For the IP55 compatible model inverter, refer to "SPECIFICATIONS" in the FR-F806 (IP55/UL Type12 specification) Instruction Manual (Hardware).

8.1 Inverter rating

◆200 V class

Model FR-F820-[]				00046	00077	00105	00167	00250	00340	00490	00630	00770	00930	01250	01540	01870	02330	03160	03800	04750
				0.75K	1.5K	2.2K	3.7K	5.5K	7.5K	11K	15K	18.5K	22K	30K	37K	45K	55K	75K	90K	110K
Applicable motor capacity (kW)*1		SLD		0.75	1.5	2.2	3.7	5.5	7.5	11	15	18.5	22	30	37	45	55	75	90/110	132
		LD		0.75	1.5	2.2	3.7	5.5	7.5	11	15	18.5	22	30	37	45	55	75	90	110
Output	Rated capacity (kVA)*2	SLD		1.8	2.9	4	6.4	10	13	19	24	29	35	48	59	71	89	120	145	181
		LD		1.6	2.7	3.7	5.8	8.8	12	17	22	27	32	43	53	65	81	110	132	165
	Rated current (A)	SLD		4.6	7.7	10.5	16.7	25	34	49	63	77	93	125	154	187	233	316	380	475
		LD		4.2	7	9.6	15.2	23	31	45	58	70.5	85	114	140	170	212	288	346	432
	Overload current rating*3	SLD		110% 60 s, 120% 3 s (inverse-time characteristics) at surrounding air temperature of 40°C																
		LD		120% 60 s, 150% 3 s (inverse-time characteristics) at surrounding air temperature of 50°C																
	Rated voltage*4			Three-phase 200 to 240 V																
Power supply	Rated input AC voltage/frequency			Three-phase 200 to 240 V, 50/60 Hz																
	Permissible AC voltage fluctuation			170 to 264 V, 50/60 Hz																
	Permissible frequency fluctuation			±5%																
	Rated input current (A)*5	Without DC reactor	SLD	5.3	8.9	13.2	19.7	31.3	45.1	62.8	80.6	96.7	115	151	185	221	269	—	—	—
			LD	5	8.3	12.2	18.3	28.5	41.6	58.2	74.8	90.9	106	139	178	207	255	—	—	—
		With DC reactor	SLD	4.6	7.7	10.5	16.7	25	34	49	63	77	93	125	154	187	233	316	380	475
			LD	4.2	7	9.6	15.2	23	31	45	58	71	85	114	140	170	212	288	346	432
	Power supply capacity (kVA)*6	Without DC reactor	SLD	2	3.4	5	7.5	12	17	24	31	37	44	58	70	84	103	—	—	—
			LD	1.9	3.2	4.7	7	11	16	22	29	35	41	53	68	79	97	—	—	—
		With DC reactor	SLD	1.8	2.9	4	6.4	10	13	19	24	29	35	48	59	71	89	120	145	181
			LD	1.6	2.7	3.7	5.8	8.8	12	17	22	27	32	43	53	65	81	110	132	165
Protection rating of structure (IEC 60529)*7				Enclose type (IP20)											Open type (IP00)					
Cooling system				Natural		Forced air														
Approx. mass (kg)				1.9	2.1	3.0	3.0	3.0	6.3	6.3	8.3	15	15	15	22	42	42	54	74	74

*1 The applicable motor capacity indicated is the maximum capacity applicable for use of the Mitsubishi Electric 4-pole standard motor.
*2 The rated output capacity is the value with respect to 220 V output voltage.
*3 The percentage of the overload current rating is the ratio of the overload current to the inverter's rated output current. For repeated duty, allow time for the inverter and motor to return to or below the temperatures under 100% load.
*4 The maximum output voltage does not exceed the power supply voltage. The maximum output voltage can be changed within the setting range.
However, the maximum point of the voltage waveform at the inverter output side is the power supply voltage multiplied by about $\sqrt{2}$.
*5 The rated input current is the value at a rated output voltage. The input power impedances (including those of the input reactor and cables) affect the value.
*6 The power supply capacity is the value at the rated output current. The input power impedances (including those of the input reactor and cables) affect the value.
*7 FR-DU08: IP40 (except for the PU connector)

上達科技有限公司
購買、維修 此手冊零組件
電話： 037-466333
Email: service@repairtw.com
Line ID: @zzz
www.repairtw.com

◆ 400 V class

■ 00023 to 01160

Model FR-F840-[]				00023	00038	00052	00083	00126	00170	00250	00310	00380	00470	00620	00770	00930	01160
				0.75K	1.5K	2.2K	3.7K	5.5K	7.5K	11K	15K	18.5K	22K	30K	37K	45K	55K
Applicable motor capacity (kW)*1		SLD		0.75	1.5	2.2	3.7	5.5	7.5	11	15	18.5	22	30	37	45	55
		LD		0.75	1.5	2.2	3.7	5.5	7.5	11	15	18.5	22	30	37	45	55
Output	Rated capacity (kVA)*2	SLD		1.8	2.9	4	6.3	10	13	19	24	29	36	47	59	71	88
		LD		1.6	2.7	3.7	5.8	8.8	12	18	22	27	33	43	53	65	81
	Rated current (A)	SLD		2.3	3.8	5.2	8.3	12.6	17	25	31	38	47	62	77	93	116
		LD		2.1	3.5	4.8	7.6	11.5	16	23	29	35	43	57	70	85	106
	Overload current rating*3	SLD		110% 60 s, 120% 3 s (inverse-time characteristics) at surrounding air temperature of 40°C													
		LD		120% 60 s, 150% 3 s (inverse-time characteristics) at surrounding air temperature of 50°C													
	Rated voltage*4			Three-phase 380 to 500 V													
Power supply	Rated input AC voltage/frequency			Three-phase 380 to 500 V, 50/60 Hz*8													
	Permissible AC voltage fluctuation			323 to 550 V, 50/60 Hz													
	Permissible frequency fluctuation			±5%													
	Rated input current (A)*5	Without DC reactor	SLD	3.2	5.4	7.8	10.9	16.4	22.5	31.7	40.3	48.2	58.4	76.8	97.6	115	141
			LD	3	4.9	7.3	10.1	15.1	22.3	31	38.2	44.9	53.9	75.1	89.7	106	130
		With DC reactor	SLD	2.3	3.8	5.2	8.3	12.6	17	25	31	38	47	62	77	93	116
			LD	2.1	3.5	4.8	7.6	11.5	16	23	29	35	43	57	70	85	106
	Power supply capacity (kVA)*6	Without DC reactor	SLD	2.5	4.1	5.9	8.3	12	17	24	31	37	44	59	74	88	107
			LD	2.3	3.7	5.5	7.7	12	17	24	29	34	41	57	68	81	99
		With DC reactor	SLD	1.8	2.9	4	6.3	10	13	19	24	29	36	47	59	71	88
			LD	1.6	2.7	3.7	5.8	8.8	12	18	22	27	33	43	53	65	81
Protection rating of structure (IEC 60529)*7				Enclose type (IP20)											Open type (IP00)		
Cooling system				Natural			Forced air										
Approx. mass (kg)				2.5	2.5	2.5	3.0	3.0	6.3	6.3	8.3	8.3	15	15	23	41	41

*1 The applicable motor capacity indicated is the maximum capacity applicable for use of the Mitsubishi Electric 4-pole standard motor.

*2 The rated output capacity is the value with respect to 440 V output voltage.

*3 The percentage of the overload current rating is the ratio of the overload current to the inverter's rated output current. For repeated duty, allow time for the inverter and motor to return to or below the temperatures under 100% load.

*4 The maximum output voltage does not exceed the power supply voltage. The maximum output voltage can be changed within the setting range. However, the maximum point of the voltage waveform at the inverter output side is the power supply voltage multiplied by about $\sqrt{2}$.

*5 The rated input current is the value at a rated output voltage. The input power impedances (including those of the input reactor and cables) affect the value.

*6 The power supply capacity is the value at the rated output current. The input power impedances (including those of the input reactor and cables) affect the value.

*7 FR-DU08: IP40 (except for the PU connector)

*8 For the power voltage exceeding 480 V, set **Pr.977 Input voltage mode selection**. (For details, refer to page 195.)

上正科技有限公司
購買、維修、工業零組件
電話：037-466333
Email: service@repairtw.com
Line Id: @2222
www.repairtw.com

■ 01800 to 06830

Model FR-F840-[]				01800	02160	02600	03250	03610	04320	04810	05470	06100	06830
				75K	90K	110K	132K	160K	185K	220K	250K	280K	315K
Applicable motor capacity (kW)*1		SLD		75/90	110	132	160	185	220	250	280	315	355
		LD		75	90	110	132	160	185	220	250	280	315
Output	Rated capacity (kVA)*2	SLD		137	165	198	248	275	329	367	417	465	521
		LD		110	137	165	198	248	275	329	367	417	465
	Rated current (A)	SLD		180	216	260	325	361	432	481	547	610	683
		LD		144	180	216	260	325	361	432	481	547	610
	Overload current rating*3	SLD		110% 60 s, 120% 3 s (inverse-time characteristics) at surrounding air temperature of 40°C									
		LD		120% 60 s, 150% 3 s (inverse-time characteristics) at surrounding air temperature of 50°C									
	Rated voltage*4			Three-phase 380 to 500 V									
Power supply	Rated input AC voltage/frequency			Three-phase 380 to 500 V, 50/60 Hz*8									
	Permissible AC voltage fluctuation			323 to 550 V, 50/60 Hz									
	Permissible frequency fluctuation			±5%									
	Rated input current (A)*5	With DC reactor	SLD	180	216	260	325	361	432	481	547	610	683
			LD	144	180	216	260	325	361	432	481	547	610
	Power supply capacity (kVA)*6	With DC reactor	SLD	137	165	198	248	275	329	367	417	465	521
			LD	110	137	165	198	248	275	329	367	417	465
Protection rating of structure (IEC 60529)*7				Open type (IP00)									
Cooling system				Forced air									
Approx. mass (kg)				43	52	55	71	78	117	117	166	166	166

*1 The applicable motor capacity indicated is the maximum capacity applicable for use of the Mitsubishi Electric 4-pole standard motor.

*2 The rated output capacity is the value with respect to 440 V output voltage.

*3 The percentage of the overload current rating is the ratio of the overload current to the inverter's rated output current. For repeated duty, allow time for the inverter and motor to return to or below the temperatures under 100% load.

*4 The maximum output voltage does not exceed the power supply voltage. The maximum output voltage can be changed within the setting range. However, the maximum point of the voltage waveform at the inverter output side is the power supply voltage multiplied by about $\sqrt{2}$.

*5 The rated input current is the value at a rated output voltage. The input power impedances (including those of the input reactor and cables) affect the value.

*6 The power supply capacity is the value at the rated output current. The input power impedances (including those of the input reactor and cables) affect the value.

*7 FR-DU08: IP40 (except for the PU connector)

*8 For the power voltage exceeding 480 V, set **Pr.977 Input voltage mode selection**. (For details, refer to page 195.)

上正科技有限公司
購買、維修 此手冊零組件
電話： 037-466333
Email: service@repairtw.com
Line id: @zzzz
www.repairtw.com

8.2 Motor rating

8.2.1 Premium high-efficiency IPM motor [MM-EFS (1500 r/min specification)]

◆ Motor specifications

Motor model	200 V class MM-EFS[]1M(-S10)*4 400 V class MM-EFS[]1M4(-S10)*4	7	15	22	37	55	75	11K	15K	18K	22K	30K	37K	45K	55K
Compatible inverter*3	200 V class FR-F820-[]	00046 (0.75K)	00077 (1.5K)	00105 (2.2K)	00167 (3.7K)	00250 (5.5K)	00340 (7.5K)	00490 (11K)	00630 (15K)	00770 (18.5K)	00930 (22K)	01250 (30K)	01540 (37K)	01870 (45K)	02330 (55K)
	400 V class FR-F840-[]	00023 (0.75K)	00038 (1.5K)	00052 (2.2K)	00083 (3.7K)	00126 (5.5K)	00170 (7.5K)	00250 (11K)	00310 (15K)	00380 (18.5K)	00470 (22K)	00620 (30K)	00770 (37K)	00930 (45K)	01160 (55K)
Continuous characteristics*1	Rated output power (kW)	0.75	1.5	2.2	3.7	5.5	7.5	11	15	18.5	22	30	37	45	55
	Rated torque (N·m)	4.77	9.55	14	23.6	35	47.7	70	95.5	118	140	191	236	286	350
Rated speed (r/min)		1500													
Maximum speed (r/min)		2250													
Number of poles		6								8					
Maximum torque		120% 60 s													
Frame number		80M	90L	100L	112M	132S	132M	160M	160L	180M		180L	200L		225S
Inertia moment J ($\times 10^{-4}$ kg·m^2)		20	40	55	110	275	280	760	770	1700	1700	1900	3400	3850	6500
Rated current (A)	200 V class	3	6.0	8.2	13.4	20	27	40	54	66	79	110	128	157	194
	400 V class	1.5	3.0	4.1	6.7	10	13.5	20	27	33	39.5	55	64	78.5	97
Structure		Totally-enclosed fan-cooled type with steel framed legs (protective structure IP44*2)													
Insulation class		F													
Vibration rank		V15													
Environment	Surrounding air temperature and humidity	-10 to +40°C (non-freezing), 90% RH or less (non-condensing)													
	Storage temperature and humidity	-20 to +70°C (non-freezing), 90% RH or less (non-condensing)													
	Atmosphere	Indoors (no direct sun light) and without corrosive gas, flammable gas, oil mist, dust and dirt, etc.													
	Altitude	Maximum 1000 m													
	Vibration	4.9 m/s^2													
Mass (kg)		11	15	22	31	50	53	95	100	135		155	220	230	290

上達科技有限公司
購買、維修 此手冊零組件
電話： 037-466333
Email: service@repairtw.com
Line Id: @zzzz
www.repairtw.com

*1 The above characteristics apply when the rated AC voltage is input from the inverter (refer to page 612). The rated output power or speed is not guaranteed at low supply voltages.

*2 This does not apply to the shaft through portion.

*3 For the LD rating.

*4 The belt drive models (MM-EFS[]1M-S10 and MM-EFS[]1M4-S10) are available for the capacity of 11 kW or higher.

◆ Motor torque characteristic

The torque characteristics of the premium high-efficiency IPM motor MM-EFS (1500 r/min) series driven by the inverter are shown in graph form as follows.

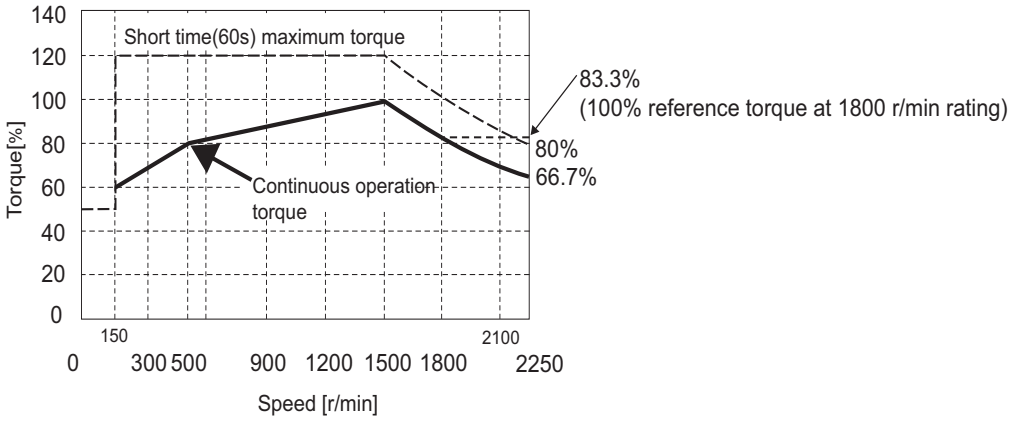

NOTE

- The motor can also be used for applications which require the rated speed of 1800 r/min.
- The torque characteristic is when the armature winding temperature is 20°C, and the input voltage to the inverter is 200 VAC or 400 VAC.
- Constant-speed operation cannot be performed for the speed of 150 r/min or less.
- The standard models (MM-EFS[]1M and MM-EFS[]1M4) of 11 kW capacity or higher are designed for a direct connection only.

上正科技有限公司
購買、維修 此手冊零組件
電話： 037-466333
Email: service@repairtw.com
Line id: @zzzz
www.repairtw.com

8.2.2 Premium high-efficiency IPM motor [MM-EFS (3000 r/min specification)]

◆ Motor specifications

Motor model	200 V class MM-EFS[]3 / 400 V class MM-EFS[]34	7	15	22	37	55	75	00630	00770
Compatible inverter*3	200 V class FR-F820-[]	00046 (0.75K)	00077 (1.5K)	00105 (2.2K)	00167 (3.7K)	00250 (5.5K)	00340 (7.5K)	00490 (11K)	00630 (15K)
	400 V class FR-F840-[]	00023 (0.75K)	00038 (1.5K)	00052 (2.2K)	00083 (3.7K)	00126 (5.5K)	00170 (7.5K)	00250 (11K)	00310 (15K)
Continuous characteristics*1	Rated output power (kW)	0.75	1.5	2.2	3.7	5.5	7.5	11	15
	Rated torque (N·m)	2.39	4.77	7.0	11.8	17.5	23.9	35.0	47.7
Rated speed (r/min)		3000							
Maximum speed (r/min)		4000							
Number of poles		6							
Maximum torque		120% 60 s							
Frame number		80M	90L		112M	132S		160M	
Inertia moment J ($\times 10^{-4}$ kg·m^2)		10.7	22.4	29.8	68.3	198		534	
Rated current (A)	200 V class	3.2	6.1	8.4	14.3	21.4	28.7	37.6	51.4
	400 V class	1.6	3.1	4.2	7.2	10.7	14.4	18.8	25.7
Structure		Totally-enclosed fan-cooled type with steel framed legs (protective structure IP44*2)							
Insulation class		F							
Vibration rank		V15							
Environment	Surrounding air temperature and humidity	-10 to +40°C (non-freezing), 90% RH or less (non-condensing)							
	Storage temperature and humidity	-20 to +70°C (non-freezing), 90% RH or less (non-condensing)							
	Atmosphere	Indoors (no direct sun light) and without corrosive gas, flammable gas, oil mist, dust and dirt, etc.							
	Altitude	Maximum 1000 m							
	Vibration	4.9 m/s2							
Mass (kg)		8	12	14	25	41		75	

*1 The above characteristics apply when the rated AC voltage is input from the inverter (refer to page 612). The rated output power or speed is not guaranteed at low supply voltages.

*2 This does not apply to the shaft through portion.

*3 For the LD rating.

上正科技有限公司
購買、維修 此手冊零組件
電話： 037-466333
E-mail: service@repairtw.com
Line id: @2222
www.repairtw.com

◆ Motor torque characteristic

The torque characteristics of the premium high-efficiency IPM motor MM-EFS (3000 r/min) series driven by the inverter are shown in graph form as follows.

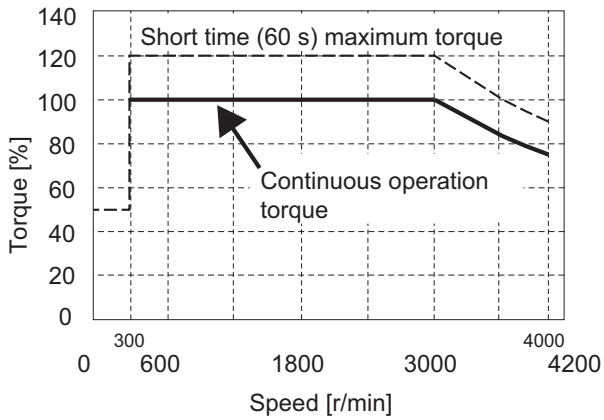

NOTE

- The torque characteristic is when the armature winding temperature is 20°C, and the input voltage to the inverter is 200 VAC or 400 VAC.
- Constant-speed operation cannot be performed for the speed of 300 r/min or less.
- The MM-EFS[]3 or MM-EFS[]34 motor with an 11 kW or higher capacity is designed for a direct connection only.

8.2.3 Premium high-efficiency IPM motor [MM-THE4]

◆ Motor specifications

Motor model		MM-THE4					
Voltage class		200 V	400 V				
Compatible Inverter*2		FR-F820-[]	FR-F840-[]				
		03160(75K)	01800(75K)	02160(90K)	02600(110K)	03250(132K)	03610(160K)
Continuous characteristics *1	Rated output power (kW)	75	75	90	110	132	160
	Rated torque (N·m)	477	477	573	700	840	1018
Rated speed (r/min)		1500					
Maximum speed (r/min)		1800					
Number of poles		6					
Maximum torque		120% 60 s					
Frame number		250MA	250MA	250MD	280MD		
Inertia moment J ($\times 10^{-4}$ kg·m^2)		6000	6000	10000	17500	20500	23250
Rated current (A)		270	135	170	195	230	280
Structure		Totally-enclosed fan-cooled type with casting framed legs (protective structure IP44)					
Insulation class		F					
Vibration rank		V25					
Environment	Surrounding air temperature and humidity	-10 to +40°C (non-freezing), 90% RH or less (non-condensing)					
	Storage temperature and humidity	-20 to +70°C (non-freezing), 90% RH or less (non-condensing)					
	Atmosphere	Indoors (no direct sun light) and free from corrosive gas, flammable gas, oil mist, dust and dirt, etc.					
	Altitude	Maximum 1000 m					
	Vibration	4.9 m/s^2					
Mass (kg)		470	470	610	780	810	860

上正科技有限公司
購買、維修 此手冊零組件
電話： 037-466333
Email: service@repairtw.com
Line id: @zzzz
www.repairtw.com

*1 The rated output power or speed is not guaranteed at low supply voltages.
*2 For the LD rating.

◆ Motor torque characteristic

The torque characteristics of the premium high-efficiency IPM motor MM-THE4 driven by the inverter are shown in graph form as follows.

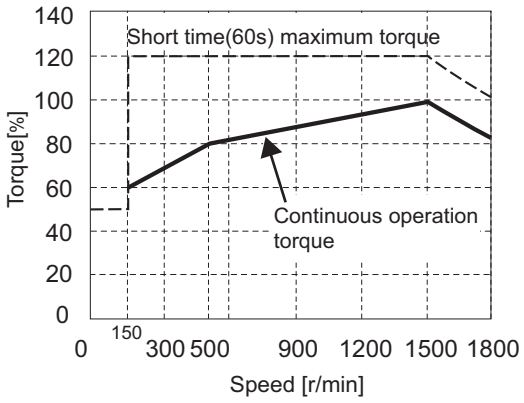

NOTE

- The motor can also be used for applications which require the rated speed of 1800 r/min.
- The torque characteristic is when the armature winding temperature is 20°C, and the input voltage to the inverter is 200 VAC or 400 VAC.
- Constant-speed operation cannot be performed for the speed of 150 r/min or less.

上正科技有限公司
購買、維修 此手冊零組件
電話： 037-466333
Email: service@repairtw.com
Line id: @zzzz
www.repairtw.com

8.3 Common specifications

Control	Control method		Soft-PWM control / high carrier frequency PWM control (selectable among V/F control (Optimum excitation control), Advanced magnetic flux vector control (Advanced optimum excitation control), and PM motor control)
	Output frequency range		0.2 to 590 Hz (400 Hz or less under Advanced magnetic flux vector control and PM motor control.)
	Frequency setting resolution	Analog input	0.015 Hz/60 Hz at 0 to 10 V/12 bits (terminals 2 and 4) 0.03 Hz/60 Hz at 0 to 5 V/11 bits or 0 to 20 mA/approx. 11 bits (terminals 2 and 4), at 0 to ±10 V/12 bits (terminal 1) 0.06 Hz/60 Hz at 0 to ±5 V/11 bits (terminal 1)
		Digital input	0.01 Hz
	Frequency accuracy	Analog input	Within ±0.2% of the maximum output frequency (25 ± 10°C)
		Digital input	0.01% or less of the set output frequency
	Voltage/frequency characteristics		The base frequency can be set from 0 to 590 Hz. The constant-torque/variable-torque pattern or adjustable 5 points V/F can be selected.
	Starting torque	Induction motor	120% 0.5 Hz (Advanced magnetic flux vector control)
		IPM motor	50%
	Torque boost		Manual torque boost
	Acceleration/deceleration time setting		0 to 3600 s (acceleration and deceleration can be set individually), linear or S-pattern acceleration/deceleration mode, backlash countermeasures acceleration/deceleration can be selected.
	DC injection brake (induction motor)		Operation frequency (0 to 120 Hz), operation time (0 to 10 s), operation voltage (0 to 30%) variable
	Stall prevention operation level		Activation range of stall prevention operation (SLD rating: 0 to 120%, LD rating: 0 to 150%). Whether to use the stall prevention or not can be selected (V/F control, Advanced magnetic flux vector control).
Operation	Frequency setting signal	Analog input	Terminals 2 and 4: 0 to 10 V / 0 to 5 V / 4 to 20 mA (0 to 20 mA) Terminal 1: -10 to +10 V / -5 to +5 V
		Digital input	Input using the setting dial of the operation panel or parameter unit. Input of four-digit BCD (Binary-coded decimal) or 16-bit binary when the option FR-A8AX is installed.
	Start signal		Forward and reverse rotation or start signal automatic self-holding input (3-wire input) can be selected.
	Input signal (12)		Low-speed operation command, Middle-speed operation command, High-speed operation command, Second function selection, Terminal 4 input selection, Jog operation selection, Output stop, Start self-holding selection, Forward rotation command, Reverse rotation command, Inverter reset The signal to be input can be changed using **Pr.178 to Pr.189 (Input terminal function selection)**.
		Pulse train input	100k pulses/s
	Operational function		Maximum frequency, minimum frequency, multi-speed operation, acceleration/deceleration pattern, thermal protection, DC injection brake, starting frequency, JOG operation, output stop (MRS), stall prevention, regeneration avoidance, increased magnetic excitation deceleration, DC feeding[*1], frequency jump, rotation display, automatic restart after instantaneous power failure, electronic bypass sequence, remote setting, retry function, carrier frequency selection, fast-response current limit, forward/reverse rotation prevention, operation mode selection, slip compensation, speed smoothing control, traverse, auto tuning, applied motor selection, RS-485 communication, PID control, PID pre-charge function, cooling fan operation selection, stop selection (deceleration stop/coasting), power failure time deceleration-to-stop function, PLC function, life diagnosis, maintenance timer, current average monitor, multiple rating, test run, 24 V power supply input for control circuit, safety stop function, self power management, BACnet communication, PID gain tuning, cleaning, load characteristics storage, emergency drive[*1]
	Output signal	Open collector output (5) Relay output (2)	Inverter running, Up to frequency, Instantaneous power failure/undervoltage[*1], Overload warning, Output frequency detection, Fault The signal to be output can be changed using **Pr.190 to Pr.196 (Output terminal function selection)**. Fault codes (4 bits) of the inverter can be output from the open collector.
		Pulse train output (FM type inverter)	50k pulses/s

上市櫃電子公司
維修、維修、備件、零組件
電話： 037-466333
Email: service@repairtw.com
Line id: @7777
www.repairtw.com

Indication	For indication on external meters	Pulse train output (FM type inverter)	Max. 2.4 kHz via one terminal (for the indication of inverter output frequency). The item for monitoring can be changed using **Pr.54 FM/CA terminal function selection**.
		Current output (CA type inverter)	Max. 20 mADC via one terminal (for the indication of inverter output frequency). The item for monitoring can be changed using **Pr.54 FM/CA terminal function selection**.
		Voltage output	Max. 10 VDC via one terminal (for the indication of inverter output frequency). The item for monitoring can be changed using **Pr.158 AM terminal function selection**.
	Operation panel (FR-DU08)	Status monitoring	Output frequency, output current, output voltage, and frequency setting value are monitored. The item for monitoring can be changed using **Pr.52 Operation panel main monitor selection**.
		Fault type	When a protective function is activated, a fault indication is displayed and the output voltage, output current, output frequency, cumulative energization time, date (year, month, day) and time at the occurrence of the fault are stored. Each fault is recorded and the last 8 records can be displayed.
Protective function		Fault	Overcurrent trip during acceleration, Overcurrent trip during constant speed, Overcurrent trip during deceleration or stop, Regenerative overvoltage trip during acceleration, Regenerative overvoltage trip during constant speed, Regenerative overvoltage trip during deceleration or stop, Inverter overload trip (electronic thermal relay function), Motor overload trip (electronic thermal relay function), Heatsink overheat, Instantaneous power failure*1, Undervoltage*1, Input phase loss*1*2, Stall prevention stop, Loss of synchronism detection*2, Upper limit fault detection, Lower limit fault detection, Output side earth (ground) fault overcurrent, Output short circuit, Output phase loss, External thermal relay operation*2, PTC thermistor operation*2, Option fault, Communication option fault, Parameter storage device fault, PU disconnection, Retry count excess*2, CPU fault, Operation panel power supply short circuit/RS-485 terminals power supply short circuit, 24 VDC power fault, Abnormal output current detection*2, Inrush current limit circuit fault*1, Communication fault (inverter), Analog input fault, USB communication fault, Safety circuit fault, Overspeed occurrence*2, 4 mA input fault, Pre-charge fault, PID signal fault*2, Internal circuit fault, User definition error by the PLC function, Abnormal internal temperature*3
		Alarm, Warning, Error message	Fan alarm, Stall prevention (overcurrent), Stall prevention (overvoltage), Electronic thermal relay function pre-alarm, PU stop, Parameter copy, Safety stop, Maintenance signal output*2, USB host error, Operation panel lock*2, Password locked*2, Parameter write error, Copy operation error, 24 V external power supply operation, Load fault warning, Emergency drive in operation*1, Continuous operation during communication fault*2, Internal fan alarm*3
Environment	Surrounding air temperature		-10 to +50°C (non-freezing) (LD rating) -10 to +40°C (non-freezing) (SLD rating, IP55 compatible models)
	Surrounding air humidity		95% RH or less (non-condensing) (With circuit board coating (conforming to IEC 60721-3-3 3C2/3S2), IP55 compatible models) 90% RH or less (non-condensing) (Without circuit board coating)
	Storage temperature*4		-20 to +65°C
	Ambience		Indoors (free from corrosive gas, flammable gas, oil mist, dust and dirt)
	Altitude/vibration		2500 m or less (For the installation at an altitude above 1000 m, consider a 3% reduction in the rated current per 500 m increase in altitude.) 5.9 m/s^2 or less*5 at 10 to 55 Hz (directions of X, Y, Z axes)

*1 The function is available for standard structure models and IP55 compatible models.
*2 Not activated in the inverter in the initial state.
*3 Available only for the IP55 compatible model.
*4 Applicable to conditions for a short time, for example, in transit.
*5 2.9 m/s^2 or less for the FR-F840-04320(185K) or higher.

上比科技有限公司
購買、維修 此手冊零組件
電話: 03-3466353
E-mail: service@repairtw.com
Line ID: @zzzz
www.repairtw.com

8.4 Outline dimension drawings

8.4.1 Inverter outline dimension drawings

FR-F820-00046(0.75K), FR-F820-00077(1.5K)

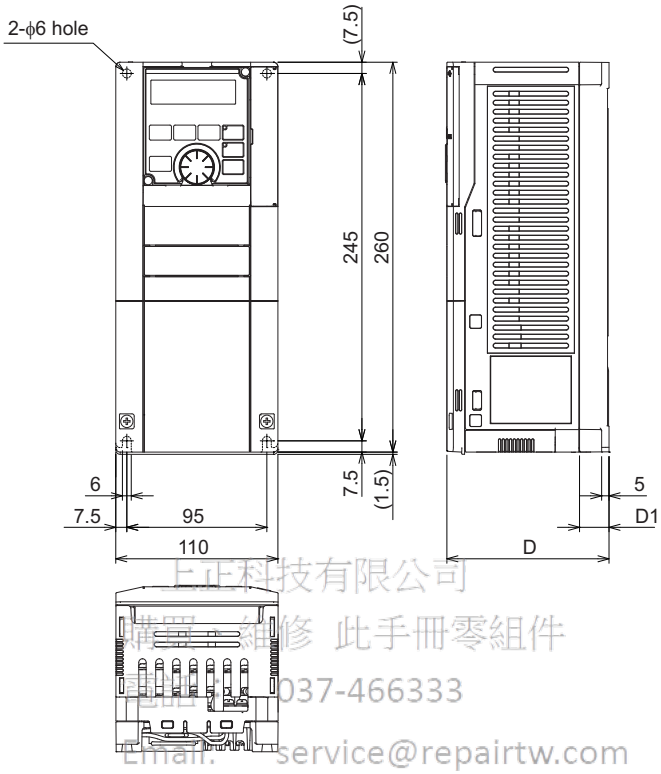

上正科技有限公司
購買、維修 此手冊零組件
電話: 037-466333
Email: service@repairtw.com
Line id: @zzzz
www.repairtw.com

Inverter model	D	D1
FR-F820-00046(0.75K)	110	20
FR-F820-00077(1.5K)	125	35

(Unit: mm)

FR-F820-00105(2.2K), 00167(3.7K), 00250(5.5K)
FR-F840-00023(0.75K), 00038(1.5K), 00052(2.2K), 00083(3.7K), 00126(5.5K)

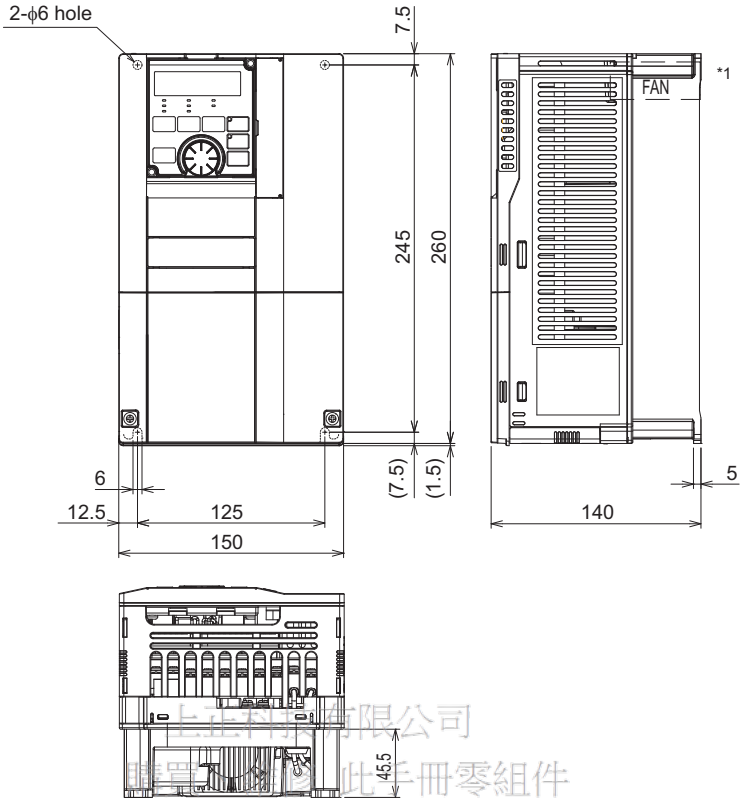

*1 FR-F840-00023(0.75K) to 00052(2.2K) are not provided with a cooling fan.

(Unit: mm)

上正科技有限公司
購買 維修此手冊零組件
電話 037-400333
Email: service@repairtw.com
Line id: @zzzz
www.repairtw.com

FR-F820-00340(7.5K), 00490(11K), 00630(15K)
FR-F840-00170(7.5K), 00250(11K), 00310(15K), 00380(18.5K)

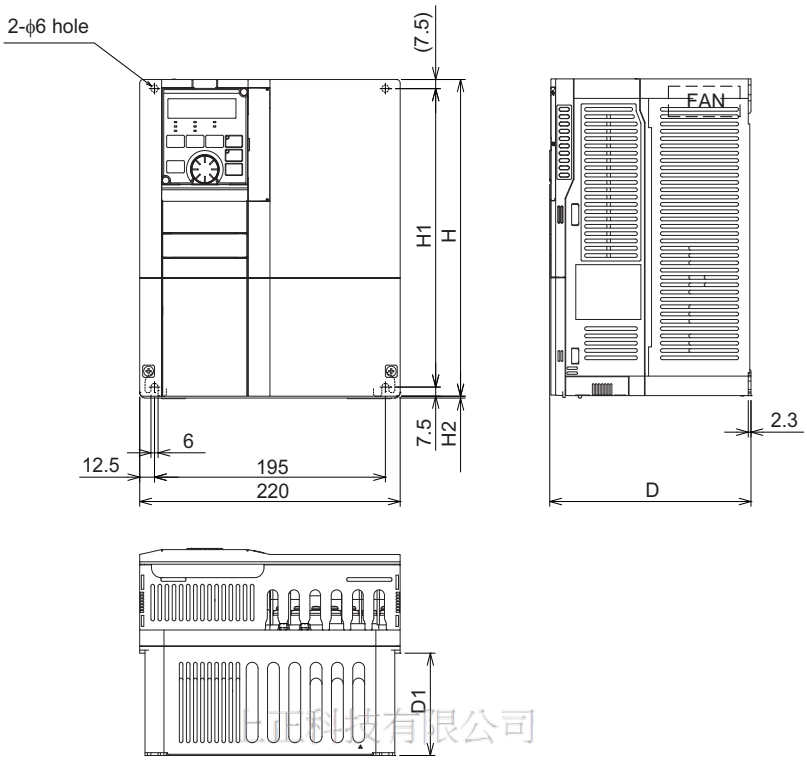

E-TT科技有限公司
購買、維修 此手冊零組件
電話： 037-466333
Email: service@repairtw.com
Line id: @zzzz
www.repairtw.com

Inverter model	H	H1	H2	D	D1
FR-F820-00340(7.5K), 00490(11K) FR-F840-00170(7.5K), 00250(11K)	260	245	1.5	170	84
FR-F820-00630(15K) FR-F840-00310(15K), 00380(18.5K)	300	285	3	190	101.5

(Unit: mm)

FR-F820-00770(18.5K), 00930(22K), 01250(30K)
FR-F840-00470(22K), 00620(30K)

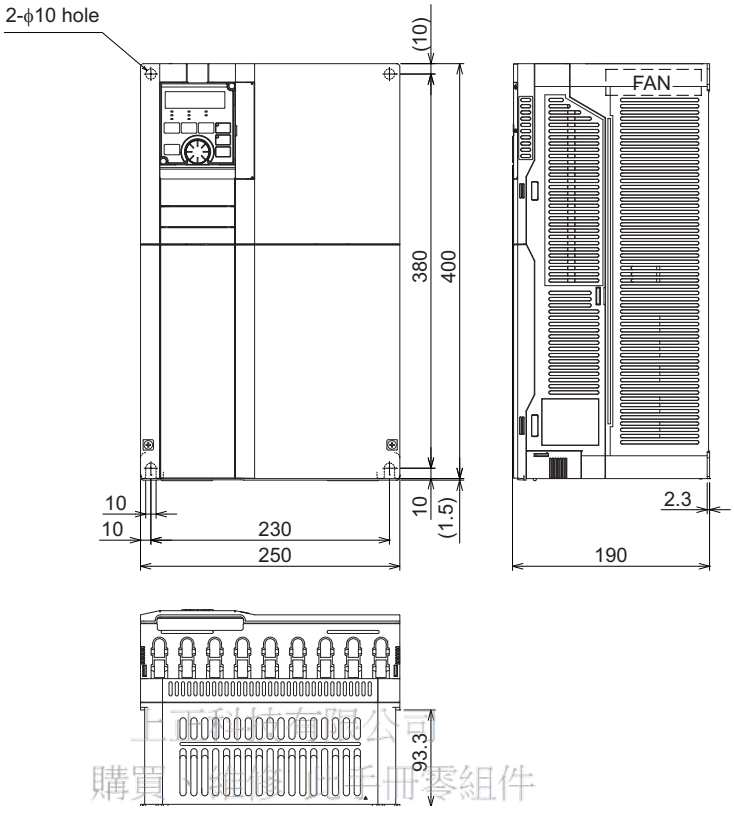

(Unit: mm)

上豪科技有限公司
購買 維修 原廠手冊零組件
電話： 037-466333
Email: service@repairtw.com
Line id: @zzzz
www.repairtw.com

FR-F820-01540(37K)
FR-F840-00770(37K)

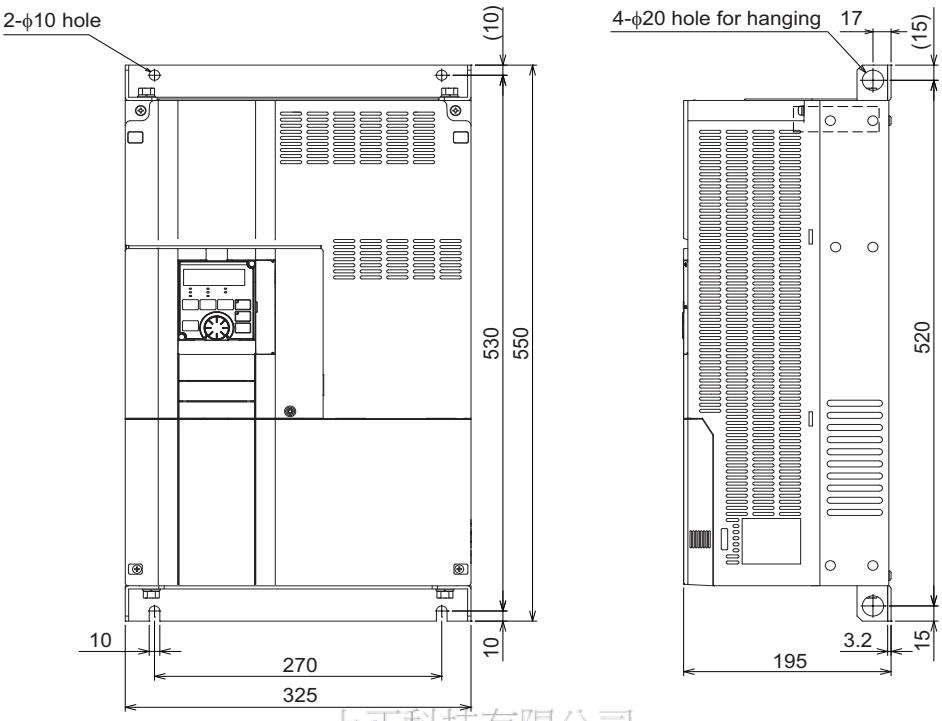

(Unit: mm)

上正科技有限公司
購買、維修 此手冊零組件
電話： 037-466333
Email: service@repairtw.com
Line id: @zzzz
www.repairtw.com

FR-F820-01870(45K), 02330(55K), 03160(75K), 03800(90K), 04750(110K)
FR-F840-00930(45K), 01160(55K), 01800(75K), 02160(90K), 02600(110K), 03250(132K), 03610(160K)

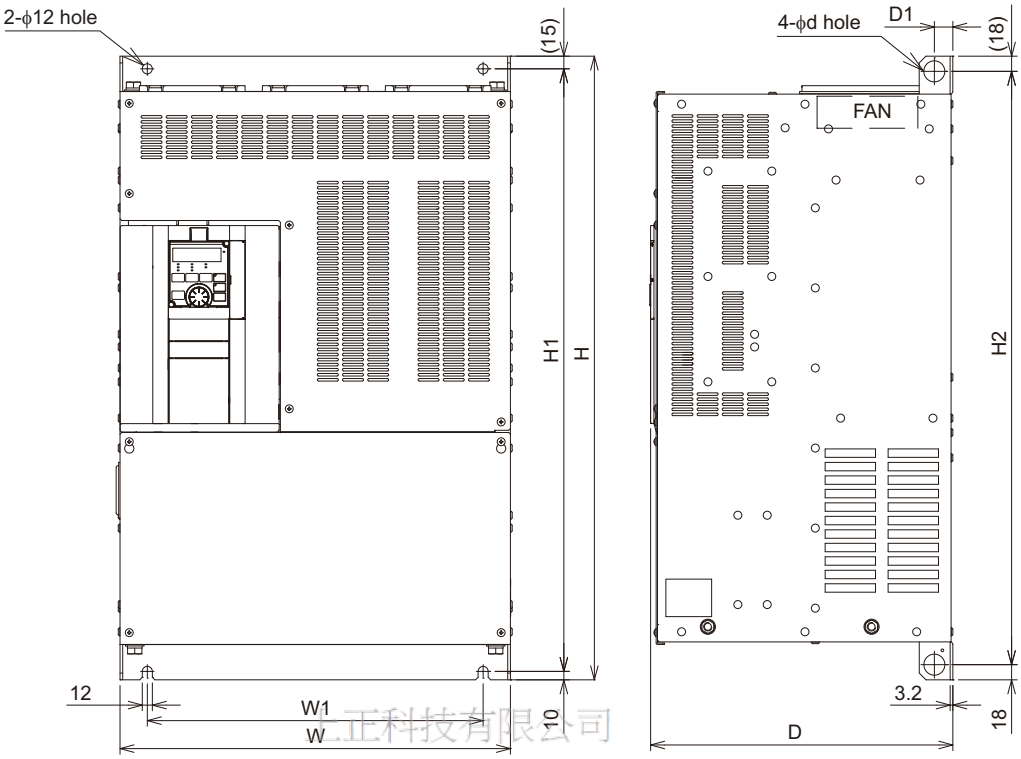

仁正科技有限公司
購買、維修 此手冊零組件
電話： 037-466333
Email: service@repairtw.com
Line id: @zzzz
www.repairtw.com

Inverter model	W	W1	H	H1	H2	d	D	D1
FR-F820-01870(45K), 02330(55K) FR-F840-00930(45K), 01160(55K), 01800(75K) *1	435	380	550	525	514	25	250	24
FR-F820-03160(75K)*1	465	410	700	675	664	25	250	22
FR-F820-03800(90K)*1, 04750(110K)*1	465	400	740	715	704	24	360	22
FR-F840-02160(90K)*1, 02600(110K)*1	465	400	620	595	584	24	300	22
FR-F840-03250(132K)*1, 03610(160K)*1	465	400	740	715	704	25	360	22

*1 Always connect a DC reactor (FR-HEL), which is available as an option.

(Unit: mm)

FR-F840-04320(185K), 04810(220K)

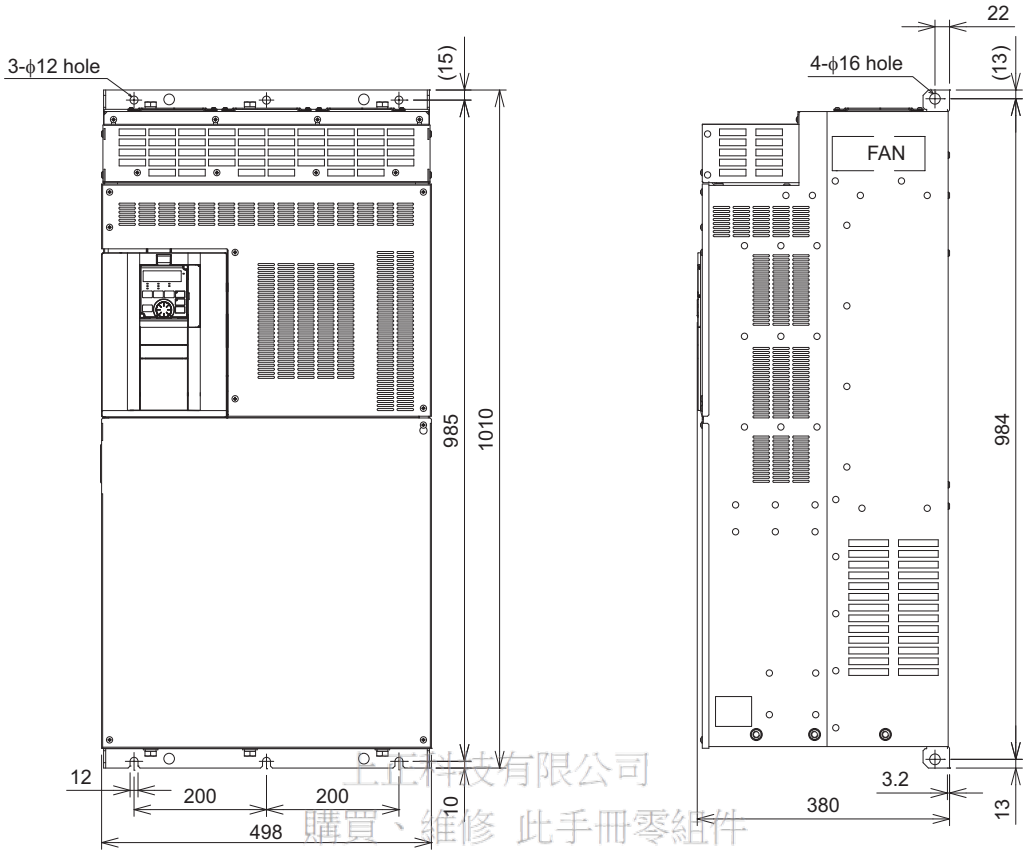

Always connect a DC reactor (FR-HEL), which is available as an option.
(Unit: mm)

上正科技有限公司
購買、維修 此手冊零組件
電話 0937-102333
Email: service@repairtw.com
Line id: @zzzz
www.repairtw.com

FR-F840-05470(250K), 06100(280K), 06830(315K)

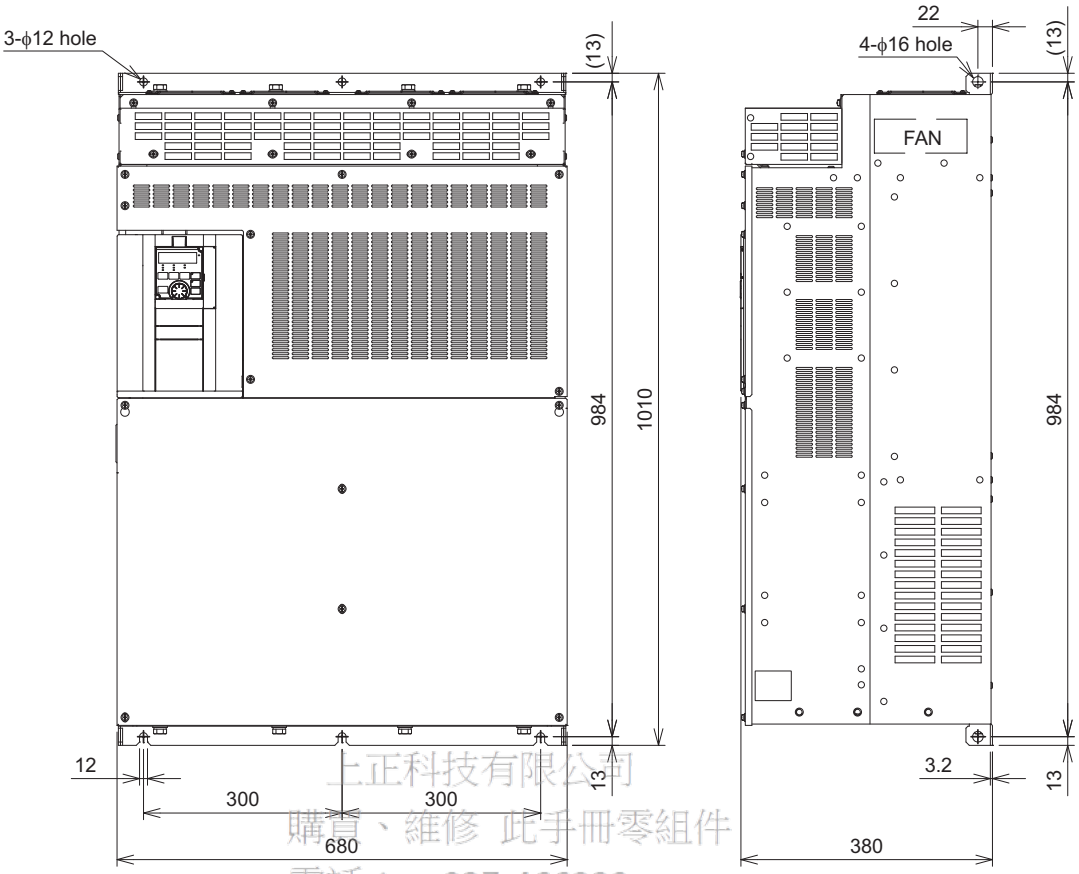

上正科技有限公司
購買、維修 此手冊零組件
電話： 037-466333
Email: service@repairtw.com
Line id: @zzzz
www.repairtw.com

Always connect a DC reactor (FR-HEL), which is available as an option.

(Unit: mm)

Operation panel (FR-DU08, FR-LU08)

Outline drawing

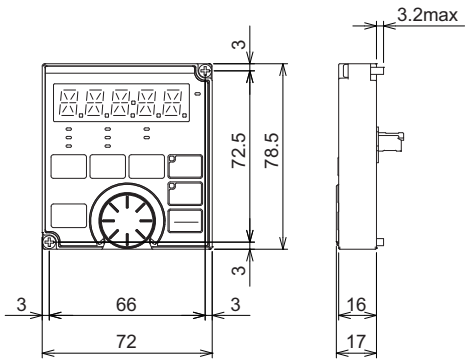

Panel cutting dimension drawing

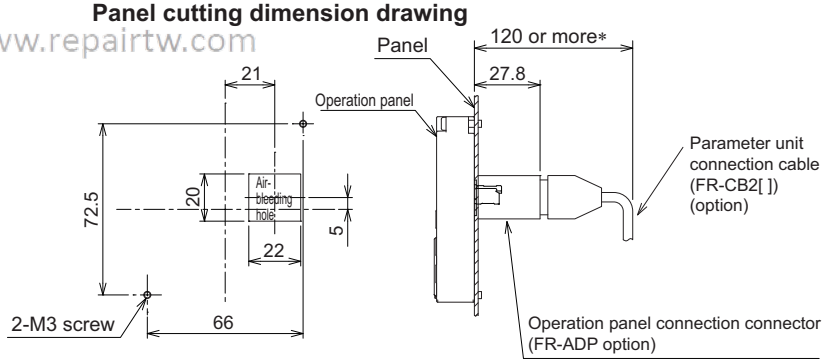

* Denotes the space required to connect an optional parameter unit connection cable (FR-CB2[ ]). When using another cable, leave the space required for the cable specification.

(Unit: mm)

8.4.2 Dedicated motor outline dimension drawings

◆ Premium high-efficiency IPM motor [MM-EFS (1500 r/min specification)]

- 30K or lower

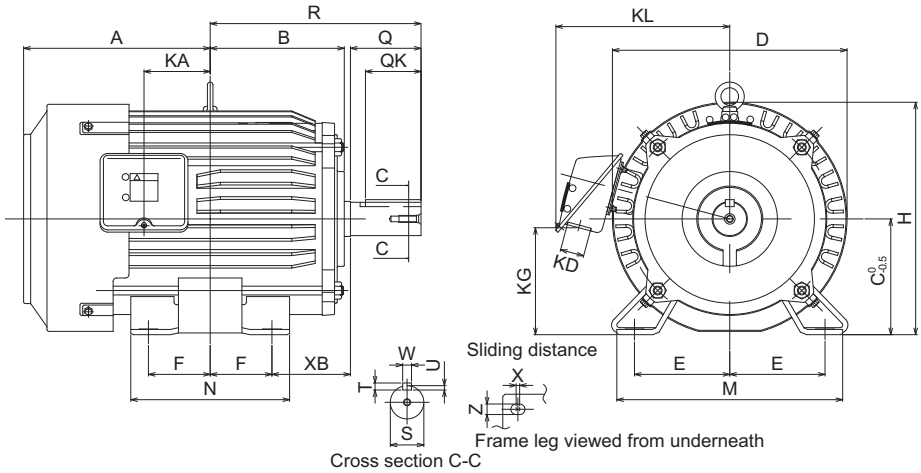

Model		Output (kW)	Frame number	Outline dimension (mm)																						
				A	B	C	D	E	F	H	KA	KD	KG	KL	M	N	XB	Q	QK	R	S	T	U	W	X	Z
200 V class MM-EFS[]1M 400 V class MM-EFS[]1M4	7	0.75	80M	122	93	80	162	62.5	50	166	39.5	27	63	145	160	125	50	40	32	140	φ19j6	6	3.5	6	15	9
	15	1.5	90L	143	111.5	90	184	70	62.5	191	53	27	76	158	175	150	56	50	40	168.5	φ24j6	7	4	8	15	9
	22	2.2	100L	173	128	100	207	80	70	203.5	65	27	88	169	200	180	63	60	45	193	φ28j6	7	4	8	4	12
	37	3.7	112M	181	135	112	228	95	70	226	69	27	103	180	230	180	70	60	45	200	φ28j6	7	4	8	4	12
	55	5.5	132S	211.5	152	132	266	108	70	265	75	27	120	197	256	180	89	80	63	239	φ38k6	8	5	10	4	12
	75	7.5	132M	230.5	171	132	266	108	89	265	94	27	120	197	256	218	89	80	63	258	φ38k6	8	5	10	4	12
	11K	11	160M	252	198	160	318	127	105	316	105	56	142	266	310	254	108	110	90	323	φ42k6	8	5	12	4	14.5
	15K	15	160L	274	220	160	318	127	127	316	127	56	142	266	310	298	108	110	90	345	φ42k6	8	5	12	4	14.5
	18K	18.5	180M	292.5	225.5	180	363	139.5	120.5	359	127	56	168	289	335	285	121	110	90	351.5	φ48k6	9	5.5	14	4	14.5
	22K	22																								
	30K	30	180L	311.5	242.5	180	363	139.5	139.5	359	146	56	168	289	335	323	121	110	90	370.5	φ55m6	10	6	16	4	14.5

中科不銹鋼 專業不銹鋼製造商
電話：037-466333
Line id: @zzzz
www.repairtw.com

- 37K to 55K

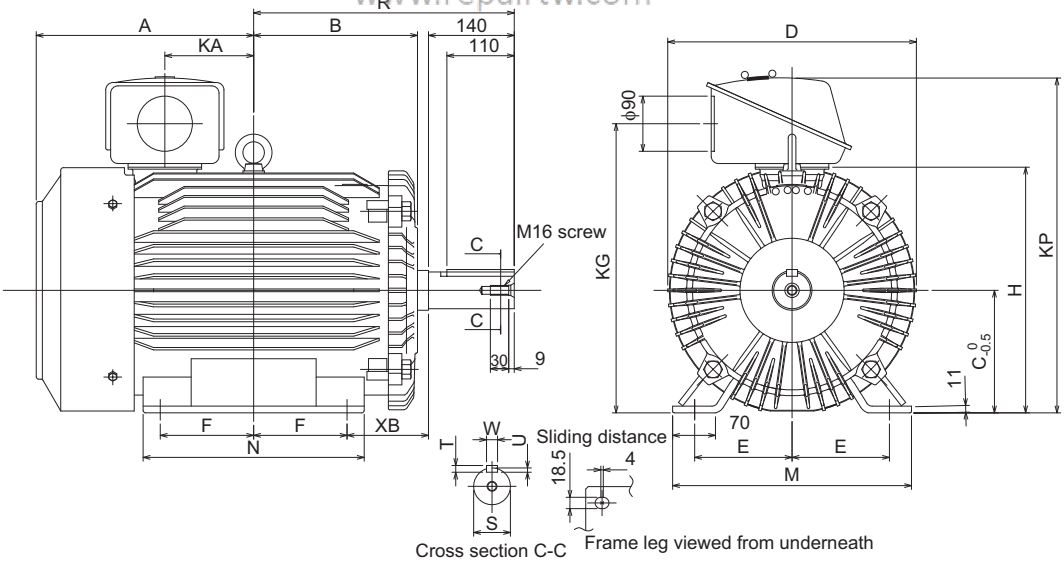

Model		Output (kW)	Frame number	Outline dimension (mm)																
				A	B	C	D	E	F	H	KA	KG	KP	M	N	XB	R	S	T	U	W
200 V class MM-EFS[]1M 400 V class MM-EFS[]1M4	37K	37	200L	355	267.5	200	406	159	152.5	401	145	472	548	390	361	133	425.5	φ60m6	11	7	18
	45K	45																		
	55K	55	225S	365	277	225	446	178	143	446	145	517	593	428	342	149	432	φ65m6	11	7	18

NOTE

- The drawings shown above are sample outline dimension drawings. The outer appearance may differ depending on the frame number.

◆ Premium high-efficiency IPM motor [MM-EFS (3000 r/min specification)]

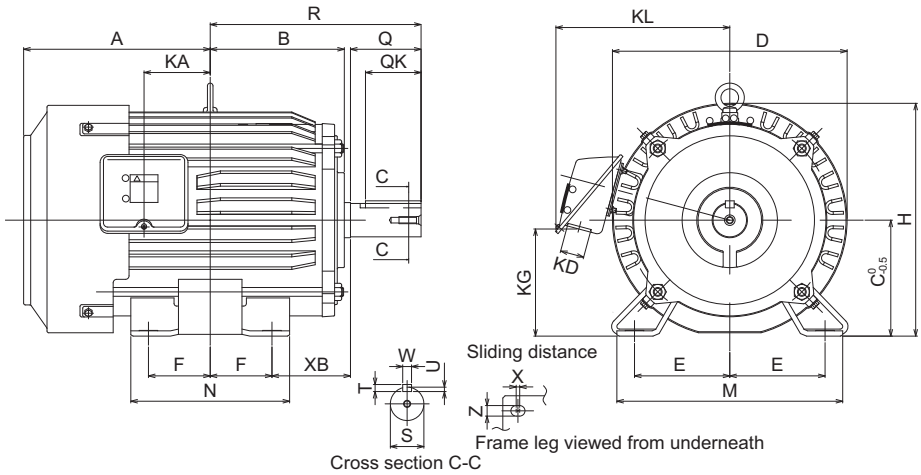

Model		Output (kW)	Frame number	Outline dimension (mm)																						
				A	B	C	D	E	F	H	KA	KD	KG	KL	M	N	XB	Q	QK	R	S	T	U	W	X	Z
200 V class MM-EFS[]3	7	0.75	80M	122	93	80	162	62.5	50	166	39.5	27	63	145	160	125	50	40	32	140	φ19j6	6	3.5	6	15	9
	15	1.5	90L	143	111.5	90	184	70	62.5	191	53	27	76	158	175	150	56	50	40	168.5	φ24j6	7	4	8	15	9
	22	2.2																								
	37	3.7	112M	181	135	112	228	95	70	226	69	27	103	180	230	180	70	60	45	200	φ28j6	7	4	8	4	12
400 V class MM-EFS[]34	55	5.5	132S	211.5	152	132	266	108	70	265	75	27	120	197	256	180	89	80	63	239	φ38k6	8	5	10	4	12
	75	7.5																								
	11K	11	160M	252	198	160	318	127	105	316	105	56	142	266	310	254	108	110	90	323	φ42k6	8	5	12	4	14.5
	15K	15																								

上庫科技有限公司
購買 維修 此手冊零組件
電話： 037-466333
Email: service@repairtw.com
Line id: @zzzz
www.repairtw.com

NOTE

- The drawings shown above are sample outline dimension drawings. The outer appearance may differ depending on the frame number.

◆ Premium high-efficiency IPM motor [MM-THE4]

- 75 kW

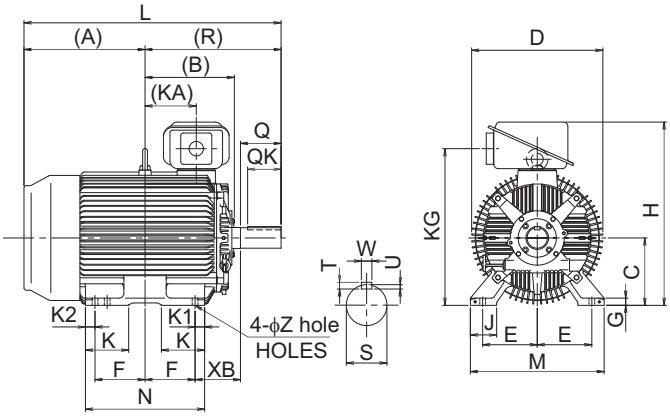

Frame number	Outline dimension (mm)																								
	A	B	C	D	E	F	G	H	J	KA	KG	K	K1	K2	L	M	N	Z	XB	Q	QK	R	S	T	U	W
250MA	449.5	317	250	490	203	174.5	30	692	100	157.5	583	168	50	50	932	486	449	24	168	140	110	482.5	75m6	12	7.5	20

- 90 kW

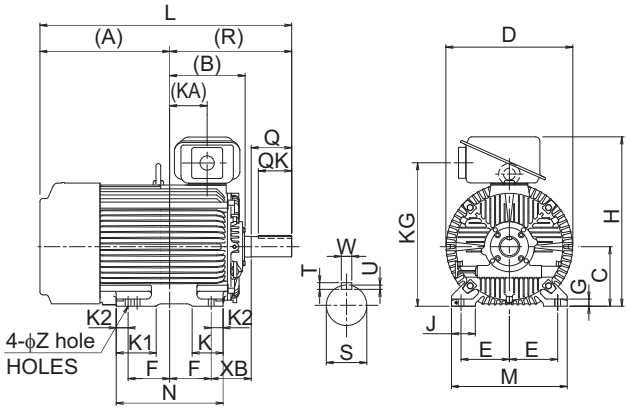

Frame number	Outline dimension (mm)																								
	A	B	C	D	E	F	G	H	J	KA	KG	K	K1	K2	L	M	N	Z	XB	Q	QK	R	S	T	U	W
250MD	545.5	317	250	535	203	174.5	30	712	100	157.5	603	130	168	50	1028	486	449	24	168	140	110	482.5	75m6	12	7.5	20

- 110 kW, 132 kW, 160 kW

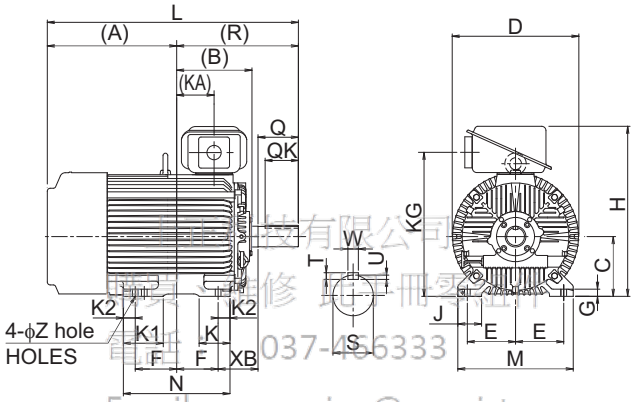

Email: service@repairtw.com
www.repairtw.com

Frame number	Outline dimension (mm)																								
	A	B	C	D	E	F	G	H	J	KA	KG	K	K1	K2	L	M	N	Z	XB	Q	QK	R	S	T	U	W
280MD	596.5	374	280	587	228.5	209.5	30	782	110	210.5	673	130	181	40	1166	560	499	24	190	170	140	569.5	85m6	14	9	22

NOTE

- The drawings shown above are sample outline dimension drawings. The outer appearance may differ depending on the frame number.
- For the 200 V class, models with capacities up to 75 kW are available.

CHAPTER 9 APPENDIX

9.1 For customers replacing the conventional model with this inverter 634
9.2 Specification comparison between PM motor control and induction motor control 635
9.3 Parameters (functions) and instruction codes under different control methods.....638
9.4 For customers using HMS network options 654

上正科技有限公司
購買、維修 此手冊零組件
電話： 037-466333
Email: service@repairtw.com
Line id: @zzzz
www.repairtw.com

9 APPENDIX

APPENDIX provides the reference information for use of this product.
Refer to APPENDIX as required.

9.1 For customers replacing the conventional model with this inverter

9.1.1 Replacement of the FR-F700(P) series

◆ Differences and compatibility with the FR-F700(P) series

Item	FR-F700(P)	FR-F800
Control method	V/F control Simple magnetic flux vector control IPM motor control	V/F control, Advanced magnetic flux vector control PM motor control (IPM motor / SPM motor)
Added functions	—	USB host function Safety stop function etc.
Maximum output frequency V/F control	400 Hz	590 Hz
PID control	Turn the X14 signal ON to enable PID control.	When the X14 signal is not assigned, just set a value in **Pr.128** to enable PID control. When the X14 signal is assigned, turn the X14 signal ON while **Pr.128** ≠ "0" to enable PID control.
Automatic restart after instantaneous power failure	Turn the CS signal ON to enable restart. **Pr.186 CS terminal function selection** initial value: "6"	The CS signal does not need to be assigned. (Restart is enabled with the **Pr.57** setting only.) **Pr.186 CS terminal function selection** initial value: "9999"
PTC thermistor input	Input from the terminal AU (The function of terminal AU is switched by a switch.)	Input through terminal 2 (The function of terminal 2 is switched by the **Pr.561** setting.)
USB connector	None	USB host: A connector USB device: mini B connector
Main circuit terminal screw size	Terminals R/L1, S/L2, T/L3, U, V, and W: Same for all capacities Terminals P/+, N/-, and P1: Same except for the 400 V class 01800(75K) (FR-F740(P)-01800(75K): M10, FRF840-01800(75K): M8) Screws for earthing (grounding): Same except for the 200 V class 03160(75K) (FR-F720(P)-03160(75K): M10, FR-F820-03160(75K): M8)	
Control circuit terminal block	Removable terminal block (screw type)	Removable terminal block (spring clamp type)
Terminal response level	The FR-F800's I/O terminals have better response level than the FR-F700(P)'s terminals. By setting **Pr.289 Inverter output terminal filter** and **Pr.699 Input terminal filter**, the terminal response level can be compatible with that of FR-F700(P). Set to approximately 5 to 8 ms and adjust the setting according to the system.	
PU	FR-DU07 (4-digit LED) FR-PU07	FR-DU08 (5-digit LED) FR-LU08 (LCD operation panel) FR-PU07 (Some functions such as Parameter copy are unavailable.) The FR-DU07 is not supported.
Plug-in option	Dedicated plug-in options (not interchangeable)	
Plug-in option connector	One connector (FR-F700P, FR-F700-CHT) Two connectors (FR-F700-NA/EC)	Three connectors
Communication option	Connected to the connector 1. (FR-F700P, FRF700-CHT) Connected to the connector 2. (FR-F700-NA/EC)	Connected to the connector 1
Installation size	For standard models, installation size is compatible. (Replacement between the same capacities does not require new mounting holes. However, for the 200 V class 03160(75K), the installation interchange attachment (FR-F8AT) is required.) For separated converter types, installation size is not compatible. (New mounting holes are required.)	

上正科技有限公司
購買、維修、此手冊資訊中
電話： 037-466338
Email: service@repairtw.com
Line id: @zzzz
www.repairtw.com

Item	FR-F700(P)	FR-F800
Converter	Built-in for all capacities	An optional converter unit (FR-CC2) is required for separated converter types.
DC reactor	The 75K or higher comes with a DC reactor (FR-HEL).	For the FR-F820-03160(75K) or higher or FR-F840-01800(75K) or higher, select a DC reactor suitable for the applicable motor capacity. (A DC reactor is not included.) Separated converter types (converter unit FR-CC2) and IP55 compatible models have a built-in DC reactor.
Brake unit (75 kW or higher)	FR-BU2, MT-BU5	FR-BU2

◆ Installation precautions

- Removal procedure of the front cover is different. (Refer to page 30.)
- Plug-in options of the FR-A700 series are not compatible.
- Operation panel (FR-DU07) cannot be used.

◆ Wiring instructions

- The spring clamp type terminal block has changed to the screw type. Use of blade terminals is recommended.

◆ Instructions for continuous use of the PU07 (parameter unit) manufactured in September 2015 or earlier

- For the FR-F800 series, many functions (parameters) have been added. When setting these parameters, the parameter names and setting ranges are not displayed.
- Only the parameter with the numbers up to "999" can be read and set. The parameters with the numbers after "999" cannot be read or set.
- Many protective functions have been added for the FR-F800 series. These functions are available, but all faults are displayed as "Fault". When the fault history is checked, "ERR" appears. Added faults will not appear on the parameter unit. (However, MT1 to MT3 are displayed as MT.)
- Parameter copy/verification function are not available.

上正科技有限公司
購買、維修、此手冊零組件
電話： 037-466333
Email: service@repairtw.com
Line id: @777
www.repairtw.com

◆ Copying parameter settings

- The FR-F700(P) series' parameter setting can be easily copied to the FR-F800 series by using the setup software (FR Configurator2). (Not supported by the setup software FR-SW3-SETUP or older.)

9.1.2 Replacement of the FR-F500(L) series

◆ Installation precautions

- Installation size is compatible for replacing the FR-F520(L)-0.75K, 2.2K, 3.7K, 7.5K, 18.5K, 22K, 37K, 45K, 90K, or 110K, or FR-A540(L)-0.75K to 3.7K, 7.5K, 11K, 22K, 37K to 55K, or 132K to 280K. New mounting holes or the installation interchange attachment are required for replacing models with other capacities. (For the 55K or lower, the installation interchange attachment can be used.)

NOTE

- **For the installation size and the outline dimensions of the separated converter type, refer to the FR-F802 (Separated Converter Type) Instruction Manual (Hardware).**

9.2 Specification comparison between PM motor control and induction motor control

Item	PM motor control	Induction motor control
Applicable motor	Premium high-efficiency IPM motor MM-EFS or MM-THE4 series (the same capacity as the inverter capacity)	General-purpose motor SF-JR, SF-PR series, etc.*1

Item		PM motor control	Induction motor control
Number of connectable motors		1: 1	Several motors can be driven under V/F control.
Number of motor poles		MM-EFS (1500 r/min specification) 15 kW or lower: 6 poles MM-EFS (1500 r/min specification) 18.5 kW or higher: 8 poles MM-EFS (3000 r/min specification): 6 poles MM-THE4: 6 poles	Normally 2, 4, or 6 poles.
Rated motor frequency		MM-EFS (1500 r/min specification) 15 kW or lower: 75 Hz MM-EFS (1500 r/min specification) 18.5 kW or higher: 100 Hz MM-EFS (3000 r/min specification): 150 Hz MM-THE4: 75 Hz	Normally 50 Hz or 60 Hz
Maximum output frequency		MM-EFS (1500 r/min specification) 15 kW or lower: 112.5 Hz MM-EFS (1500 r/min specification) 18.5 kW or higher: 150 Hz MM-EFS (3000 r/min specification): 200 Hz MM-THE4: 90 Hz	590 Hz (17700 r/min with 4P) (Set the upper limit frequency (**Pr.1, Pr.18**) according to the motor and machine specifications.)
Permissible load		120% 60 s, 150% 3 s (inverse-time characteristics) (The % value is a ratio to the rated motor current.)	120% 60 s, 150% 3 s (inverse-time characteristics) (The % value is a ratio to the inverter rated current.)
Maximum starting torque		50%	120% (Advanced magnetic flux vector control)
Frequency setting and resolution (based on the motor rating)	**Terminals 2 and 4 (0 to 10 V / 12 bits)**	MM-EFS (1500 r/min specification) 15 kW or lower[*2] and MM-THE4: 0.018 Hz MM-EFS (1500 r/min specification) 18.5 kW or higher[*2]: 0.025 Hz MM-EFS (3000 r/min specification): 0.036 Hz	0.015 Hz (60 Hz rating)
	Terminals 2 and 4 (0 to 5 V / 11 bits or 0 to 20 mA / 11 bits) Terminal 1 (0 to ±10 V / 12 bits)	MM-EFS (1500 r/min specification) 15 kW or lower[*2] and MM-THE4: 0.036 Hz MM-EFS (1500 r/min specification) 18.5 kW or higher[*2]: 0.050 Hz MM-EFS (3000 r/min specification): 0.072 Hz	0.03 Hz (60 Hz rating)
	Terminal 1 (0 to ±5 V / 11 bits)	MM-EFS (1500 r/min specification) 15 kW or lower[*2] and MM-THE4: 0.072 Hz MM-EFS (1500 r/min specification) 18.5 kW or higher[*2]: 0.100 Hz MM-EFS (3000 r/min specification): 0.144 Hz	0.06 Hz (60 Hz rating)
Output signal	**Pulse output for meter**	In the initial setting, 1 mA is output at the rated motor frequency from across terminals FM and SD. (SD is a common terminal.) The permissible frequency load current is 2 mA. Pulse specification: 1440 pulses/s at the rated motor frequency	In the initial setting, 1 mA is output at 60 Hz from across terminals FM and SD. (SD is a common terminal.) The permissible frequency load current is 2 mA. Pulse specification: 1440 pulses/s at 60 Hz
Carrier frequency		Four patterns of 2 kHz, 6 kHz, 10 kHz, and 14 kHz[*3]	Selectable between 0.75 kHz to 14.5 kHz[*3]
		Two patterns of 2 kHz and 6 kHz[*4]	0.75 kHz to 6 kHz[*4]
Automatic restart after instantaneous power failure		No startup delay time. Using the regeneration avoidance function together is recommended.	Startup waiting time exists.
Startup delay		Startup delay of about 0.1 s for initial tuning.	No startup delay.
Driving by the commercial power supply		Not available. Never connect an IPM motor to the commercial power supply.	Can be driven by the commercial power supply.
Operation during coasting		While the motor is coasting, an electrical potential is generated across motor terminals. Before wiring, make sure that the motor is stopped.	While the motor is coasting, no potential is generated across motor terminals.
Maximum motor wiring length		100 m or shorter	Overall length: 500 m or shorter

*1 Select a motor with the rated current equal to or less than the inverter rated current. (It must be 0.4 kW or higher.)
If a motor with substantially low rated current compared with the inverter rated current is used, speed and torque accuracies may deteriorate due to torque ripples, etc. Set the rated motor current to about 40% or higher of the inverter rated current.

*2 For the MM-EFS (1500 r/min specification), the number of motor poles differs between the 15 kW or lower motor (6 poles) and the 18.5 kW or higher motor (8 poles). For this reason, the frequency setting resolution also differs between them.

*3 For the FR-F820-02330(55K) or lower and FR-F840-01160(55K) or lower.

上市科技有限公司
購買、維修、出手冊零組件
電話：037-466333
Email: service@repairtw.com
www.repairtw.com

*4 For the FR-F820-03160(75K) or higher and FR-F840-01800(75K) or higher.

NOTE

- Before wiring, make sure that the motor is stopped. Otherwise you may get an electric shock.
- Never connect an IPM motor to the commercial power supply.
- No slippage occurs with an IPM motor because of its characteristic. If an IPM motor, which took over an induction motor, is driven at the same speed as for the general-purpose motor, the running speed of the IPM motor becomes faster by the amount of the general-purpose motor's slippage. Adjust the speed command to run the IPM motor at the same speed as the induction motor, as required.

上正科技有限公司
購買、維修 此手冊零組件
電話： 037-466333
Email: service@repairtw.com
Line id: @zzzz
www.repairtw.com

9.3 Parameters (functions) and instruction codes under different control methods

*1 Instruction codes are used to read and write parameters in accordance with the Mitsubishi inverter protocol of RS-485 communication. (For RS-485 communication, refer to page 482.)

*2 Function availability under each control method is shown as follows:
○: Available
×: Not available

*3 For Parameter copy, Parameter clear, and All parameter clear, ○ indicates the function is available, and × indicates the function is not available.

*4 Communication parameters that are not cleared by parameter clear or all clear (H5A5A or H55AA) via communication. (For RS-485 communication, refer to page 482.)

*5 When a communication option is installed, parameter clear (lock release) during password lock (**Pr.297 Password lock/unlock** ≠ "9999") can be performed only from the communication option.

*6 Reading and writing via the PU connector are available.

Symbols in the table indicate parameters that operate when the options are connected.

AR FR-A8AR, AX FR-A8AX, AY FR-A8AY, NC FR-A8NC, NCE FR-A8NCE, ND FR-A8ND, NP FR-A8NP, NF FR-A8NF, NL FR-A8NL

Pr.	Name	Instruction code*1			Control method*2			Parameter		
		Read	Write	Extended	V/F	Magnetic flux	PM	Copy*3	Clear*3	All clear*3
0	Torque boost	00	80	0	○	×	×	○	○	○
1	Maximum frequency	01	81	0	○	○	○	○	○	○
2	Minimum frequency	02	82	0	○	○	○	○	○	○
3	Base frequency	03	83	0	○	×	×	○	○	○
4	Multi-speed setting (high speed)	04	84	0	○	○	○	○	○	○
5	Multi-speed setting (middle speed)	05	85	0	○	○	○	○	○	○
6	Multi-speed setting (low speed)	06	86	0	○	○	○	○	○	○
7	Acceleration time	07	87	0	○	○	○	○	○	○
8	Deceleration time	08	88	0	○	○	○	○	○	○
9	Electronic thermal O/L relay	09	89	0	○	○	○	○	○	○
10	DC injection brake operation frequency	0A	8A	0	○	○	○	○	○	○
11	DC injection brake operation time	0B	8B	0	○	○	○	○	○	○
12	DC injection brake operation voltage	0C	8C	0	○	○	×	○	○	○
13	Starting frequency	0D	8D	0	○	○	○	○	○	○
14	Load pattern selection	0E	8E	0	○	×	×	○	○	○
15	Jog frequency	0F	8F	0	○	○	○	○	○	○
16	Jog acceleration/deceleration time	10	90	0	○	○	○	○	○	○
17	MRS input selection	11	91	0	○	○	○	○	○	○
18	High speed maximum frequency	12	92	0	○	○	○	○	○	○
19	Base frequency voltage	13	93	0	○	×	×	○	○	○
20	Acceleration/deceleration reference frequency	14	94	0	○	○	○	○	○	○
21	Acceleration/deceleration time increments	15	95	0	○	○	○	○	○	○
22	Stall prevention operation level	16	96	0	○	○	○	○	○	○
23	Stall prevention operation level compensation factor at double speed	17	97	0	○	○	×	○	○	○
24	Multi-speed setting (speed 4)	18	98	0	○	○	○	○	○	○
25	Multi-speed setting (speed 5)	19	99	0	○	○	○	○	○	○
26	Multi-speed setting (speed 6)	1A	9A	0	○	○	○	○	○	○
27	Multi-speed setting (speed 7)	1B	9B	0	○	○	○	○	○	○
28	Multi-speed input compensation selection	1C	9C	0	○	○	○	○	○	○
29	Acceleration/deceleration pattern selection	1D	9D	0	○	○	○	○	○	○
30	Regenerative function selection	1E	9E	0	○	○	○	○	○	○
31	Frequency jump 1A	1F	9F	0	○	○	○	○	○	○
32	Frequency jump 1B	20	A0	0	○	○	○	○	○	○

上正科技有限公司
購買、維修此手冊零組件
電話：03-466333
Email: service@repairtw.com
Line Id: @zzzz
www.repairtw.com

Pr.	Name	Instruction code*1			Control method*2			Parameter		
		Read	Write	Extended	V/F	Magnetic flux	PM	Copy*3	Clear*3	All clear*3
33	Frequency jump 2A	21	A1	0	○	○	○	○	○	○
34	Frequency jump 2B	22	A2	0	○	○	○	○	○	○
35	Frequency jump 3A	23	A3	0	○	○	○	○	○	○
36	Frequency jump 3B	24	A4	0	○	○	○	○	○	○
37	Speed display	25	A5	0	○	○	○	○	○	○
41	Up-to-frequency sensitivity	29	A9	0	○	○	○	○	○	○
42	Output frequency detection	2A	AA	0	○	○	○	○	○	○
43	Output frequency detection for reverse rotation	2B	AB	0	○	○	○	○	○	○
44	Second acceleration/deceleration time	2C	AC	0	○	○	○	○	○	○
45	Second deceleration time	2D	AD	0	○	○	○	○	○	○
46	Second torque boost	2E	AE	0	○	×	×	○	○	○
47	Second V/F (base frequency)	2F	AF	0	○	×	×	○	○	○
48	Second stall prevention operation level	30	B0	0	○	○	×	○	○	○
49	Second stall prevention operation frequency	31	B1	0	○	○	×	○	○	○
50	Second output frequency detection	32	B2	0	○	○	○	○	○	○
51	Second electronic thermal O/L relay	33	B3	0	○	○	○	○	○	○
52	Operation panel main monitor selection	34	B4	0	○	○	○	○	○	○
54	FM/CA terminal function selection	36	B6	0	○	○	○	○	○	○
55	Frequency monitoring reference	37	B7	0	○	○	○	○	○	○
56	Current monitoring reference	38	B8	0	○	○	○	○	○	○
57	Restart coasting time	39	B9	0	○	○	○	○	○	○
58	Restart cushion time	3A	BA	0	○	○	×	○	○	○
59	Remote function selection	3B	BB	0	○	○	○	○	○	○
60	Energy saving control selection	3C	BC	0	○	○	×	○	○	○
65	Retry selection	41	C1	0	○	○	○	○	○	○
66	Stall prevention operation reduction starting frequency	42	C2	0	○	○	×	○	○	○
67	Number of retries at fault occurrence	43	C3	0	○	○	○	○	○	○
68	Retry waiting time	44	C4	0	○	○	○	○	○	○
69	Retry count display erase	45	C5	0	○	○	○	○	○	○
70	Parameter for manufacturer setting. Do not set.									
71	Applied motor	47	C7	0	○	○	○	○	○	○
72	PWM frequency selection	48	C8	0	○	○	○	○	○	○
73	Analog input selection	49	C9	0	○	○	○	○	×	○
74	Input filter time constant	4A	CA	0	○	○	○	○	○	○
75	Reset selection/disconnected PU detection/PU stop selection	4B	CB	0	○	○	○	○	×	×
76	Fault code output selection	4C	CC	0	○	○	○	○	○	○
77*6	Parameter write selection	4D	CD	0	○	○	○	○	○	○
78	Reverse rotation prevention selection	4E	CE	0	○	○	○	○	○	○
79*6	Operation mode selection	4F	CF	0	○	○	○	○	○	○
80	Motor capacity	50	D0	0	×	○	○	○	○	○
81	Number of motor poles	51	D1	0	×	○	○	○	○	○
82	Motor excitation current	52	D2	0	×	○	×	○	×	○
83	Rated motor voltage	53	D3	0	×	○	○	○	○	○
84	Rated motor frequency	54	D4	0	×	○	○	○	○	○
85	Excitation current break point	55	D5	0	×	○	×	○	×	○
86	Excitation current low-speed scaling factor	56	D6	0	×	○	×	○	×	○
89	Speed control gain (Advanced magnetic flux vector)	59	D9	0	×	○	×	○	×	○
90	Motor constant (R1)	5A	DA	0	×	○	○	○	×	○
91	Motor constant (R2)	5B	DB	0	×	○	×	○	×	○
92	Motor constant (L1)/d-axis inductance (Ld)	5C	DC	0	×	○	○	○	×	○

上正科技有限公司
購買、維修、此手冊零組件
電話：037-466333
Email: service@repairtw.com
Line id: @zzz2
www.repairtw.com

Pr.	Name	Instruction code*1			Control method*2			Parameter		
		Read	Write	Extended	V/F	Magnetic flux	PM	Copy*3	Clear*3	All clear*3
93	Motor constant (L2)/q-axis inductance (Lq)	5D	DD	0	×	○	○	○	×	○
94	Motor constant (X)	5E	DE	0	×	○	×	○	×	○
95	Online auto tuning selection	5F	DF	0	×	○	×	○	○	○
96	Auto tuning setting/status	60	E0	0	×	○	○	○	×	○
100	V/F1 (first frequency)	00	80	1	○	×	×	○	○	○
101	V/F1 (first frequency voltage)	01	81	1	○	×	×	○	○	○
102	V/F2 (second frequency)	02	82	1	○	×	×	○	○	○
103	V/F2 (second frequency voltage)	03	83	1	○	×	×	○	○	○
104	V/F3 (third frequency)	04	84	1	○	×	×	○	○	○
105	V/F3 (third frequency voltage)	05	85	1	○	×	×	○	○	○
106	V/F4 (fourth frequency)	06	86	1	○	×	×	○	○	○
107	V/F4 (fourth frequency voltage)	07	87	1	○	×	×	○	○	○
108	V/F5 (fifth frequency)	08	88	1	○	×	×	○	○	○
109	V/F5 (fifth frequency voltage)	09	89	1	○	×	×	○	○	○
111	Check valve deceleration time	0B	8B	1	○	○	○	○	○	○
117	PU communication station number	11	91	1	○	○	○	○	○*4	○*4
118	PU communication speed	12	92	1	○	○	○	○	○*4	○*4
119	PU communication stop bit length / data length	13	93	1	○	○	○	○	○*4	○*4
120	PU communication parity check	14	94	1	○	○	○	○	○*4	○*4
121	PU communication retry count	15	95	1	○	○	○	○	○*4	○*4
122	PU communication check time interval	16	96	1	○	○	○	○	○*4	○*4
123	PU communication waiting time setting	17	97	1	○	○	○	○	○*4	○*4
124	PU communication CR/LF selection	18	98	1	○	○	○	○	○*4	○*4
125	Terminal 2 frequency setting gain frequency	19	99	1	○	○	○	○	×	○
126	Terminal 4 frequency setting gain frequency	1A	9A	1	○	○	○	○	×	○
127	PID control automatic switchover frequency	1B	9B	1	○	○	○	○	○	○
128	PID action selection	1C	9C	1	○	○	○	○	○	○
129	PID proportional band	1D	9D	1	○	○	○	○	○	○
130	PID integral time	1E	9E	1	○	○	○	○	○	○
131	PID upper limit	1F	9F	1	○	○	○	○	○	○
132	PID lower limit	20	A0	1	○	○	○	○	○	○
133	PID action set point	21	A1	1	○	○	○	○	○	○
134	PID differential time	22	A2	1	○	○	○	○	○	○
135	Electronic bypass sequence selection	23	A3	1	○	○	×	○	○	○
136	MC switchover interlock time	24	A4	1	○	○	×	○	○	○
137	Start waiting time	25	A5	1	○	○	×	○	○	○
138	Bypass selection at a fault	26	A6	1	○	○	×	○	○	○
139	Automatic switchover frequency from inverter to bypass operation	27	A7	1	○	○	×	○	○	○
140	Backlash acceleration stopping frequency	28	A8	1	○	○	○	○	○	○
141	Backlash acceleration stopping time	29	A9	1	○	○	○	○	○	○
142	Backlash deceleration stopping frequency	2A	AA	1	○	○	○	○	○	○
143	Backlash deceleration stopping time	2B	AB	1	○	○	○	○	○	○
144	Speed setting switchover	2C	AC	1	○	○	○	○	○	○
145	PU display language selection	2D	AD	1	○	○	○	○	×	×
147	Acceleration/deceleration time switching frequency	2F	AF	1	○	○	○	○	○	○
148	Stall prevention level at 0 V input	30	B0	1	○	○	×	○	○	○
149	Stall prevention level at 10 V input	31	B1	1	○	○	×	○	○	○
150	Output current detection level	32	B2	1	○	○	○	○	○	○

上正科技有限公司
購買、維修 此手冊零組件
電話：037-466333
Email: service@repairtw.com
Line id: @zzzz
www.repairtw.com

Pr.	Name	Instruction code*1			Control method*2			Parameter		
		Read	Write	Extended	V/F	Magnetic flux	PM	Copy*3	Clear*3	All clear*3
151	Output current detection signal delay time	33	B3	1	○	○	○	○	○	○
152	Zero current detection level	34	B4	1	○	○	○	○	○	○
153	Zero current detection time	35	B5	1	○	○	○	○	○	○
154	Voltage reduction selection during stall prevention operation	36	B6	1	○	○	×	○	○	○
155	RT signal function validity condition selection	37	B7	1	○	○	○	○	○	○
156	Stall prevention operation selection	38	B8	1	○	○	○	○	○	○
157	OL signal output timer	39	B9	1	○	○	○	○	○	○
158	AM terminal function selection	3A	BA	1	○	○	○	○	○	○
159	Automatic switchover frequency range from bypass to inverter operation	3B	BB	1	○	○	×	○	○	○
160	User group read selection	00	80	2	○	○	○	○	○	○
161	Frequency setting/key lock operation selection	01	81	2	○	○	○	○	×	○
162	Automatic restart after instantaneous power failure selection	02	82	2	○	○	○	○	○	○
163	First cushion time for restart	03	83	2	○	○	×	○	○	○
164	First cushion voltage for restart	04	84	2	○	○	×	○	○	○
165	Stall prevention operation level for restart	05	85	2	○	○	×	○	○	○
166	Output current detection signal retention time	06	86	2	○	○	○	○	○	○
167	Output current detection operation selection	07	87	2	○	○	○	○	○	○
168	Parameter for manufacturer setting. Do not set.									
169										
170	Watt-hour meter clear	0A	8A	2	○	○	○	○	×	○
171	Operation hour meter clear	0B	8B	2	○	○	○	×	×	×
172	User group registered display/batch clear	0C	8C	2	○	○	○	×	×	×
173	User group registration	0D	8D	2	○	○	○	×	×	×
174	User group clear	0E	8E	2	○	○	○	×	×	×
178	STF terminal function selection	12	92	2	○	○	○	○	×	○
179	STR terminal function selection	13	93	2	○	○	○	○	×	○
180	RL terminal function selection	14	94	2	○	○	○	○	×	○
181	RM terminal function selection	15	95	2	○	○	○	○	×	○
182	RH terminal function selection	16	96	2	○	○	○	○	×	○
183	RT terminal function selection	17	97	2	○	○	○	○	×	○
184	AU terminal function selection	18	98	2	○	○	○	○	×	○
185	JOG terminal function selection	19	99	2	○	○	○	○	×	○
186	CS terminal function selection	1A	9A	2	○	○	○	○	×	○
187	MRS terminal function selection	1B	9B	2	○	○	○	○	×	○
188	STOP terminal function selection	1C	9C	2	○	○	○	○	×	○
189	RES terminal function selection	1D	9D	2	○	○	○	○	×	○
190	RUN terminal function selection	1E	9E	2	○	○	○	○	×	○
191	SU terminal function selection	1F	9F	2	○	○	○	○	×	○
192	IPF terminal function selection	20	A0	2	○	○	○	○	×	○
193	OL terminal function selection	21	A1	2	○	○	○	○	×	○
194	FU terminal function selection	22	A2	2	○	○	○	○	×	○
195	ABC1 terminal function selection	23	A3	2	○	○	○	○	×	○
196	ABC2 terminal function selection	24	A4	2	○	○	○	○	×	○
232	Multi-speed setting (8 speed)	28	A8	2	○	○	○	○	○	○
233	Multi-speed setting (9 speed)	29	A9	2	○	○	○	○	○	○
234	Multi-speed setting (10 speed)	2A	AA	2	○	○	○	○	○	○
235	Multi-speed setting (11 speed)	2B	AB	2	○	○	○	○	○	○
236	Multi-speed setting (12 speed)	2C	AC	2	○	○	○	○	○	○
237	Multi-speed setting (13 speed)	2D	AD	2	○	○	○	○	○	○

上正科技有限公司
購買、維修 此手冊零組件
電話: 07-466333
Email: service@repairtw.com
Line id: @zzzz
www.repairtw.com

Pr.	Name	Instruction code*1			Control method*2			Parameter		
		Read	Write	Extended	V/F	Magnetic flux	PM	Copy*3	Clear*3	All clear*3
238	Multi-speed setting (14 speed)	2E	AE	2	○	○	○	○	○	○
239	Multi-speed setting (15 speed)	2F	AF	2	○	○	○	○	○	○
240	Soft-PWM operation selection	30	B0	2	○	○	○	○	○	○
241	Analog input display unit switchover	31	B1	2	○	○	○	○	○	○
242	Terminal 1 added compensation amount (terminal 2)	32	B2	2	○	○	○	○	○	○
243	Terminal 1 added compensation amount (terminal 4)	33	B3	2	○	○	○	○	○	○
244	Cooling fan operation selection	34	B4	2	○	○	○	○	○	○
245	Rated slip	35	B5	2	○	×	×	○	○	○
246	Slip compensation time constant	36	B6	2	○	×	×	○	○	○
247	Constant output range slip compensation selection	37	B7	2	○	×	×	○	○	○
248	Self power management selection	38	B8	2	○	○	○	○	○	○
249	Earth (ground) fault detection at start	39	B9	2	○	○	×	○	○	○
250	Stop selection	3A	BA	2	○	○	○	○	○	○
251	Output phase loss protection selection	3B	BB	2	○	○	○	○	○	○
252	Override bias	3C	BC	2	○	○	○	○	○	○
253	Override gain	3D	BD	2	○	○	○	○	○	○
254	Main circuit power OFF waiting time	3E	BE	2	○	○	○	○	○	○
255	Life alarm status display	3F	BF	2	○	○	○	×	×	×
256	Inrush current limit circuit life display	40	C0	2	○	○	○	×	×	×
257	Control circuit capacitor life display	41	C1	2	○	○	○	×	×	×
258	Main circuit capacitor life display	42	C2	2	○	○	○	×	×	×
259	Main circuit capacitor life measuring	43	C3	2	○	○	○	○	○	○
260	PWM frequency automatic switchover	44	C4	2	○	○	○	○	○	○
261	Power failure stop selection	45	C5	2	○	○	○	○	○	○
262	Subtracted frequency at deceleration start	46	C6	2	○	○	○	○	○	○
263	Subtraction starting frequency	47	C7	2	○	○	○	○	○	○
264	Power-failure deceleration time 1	48	C8	2	○	○	○	○	○	○
265	Power-failure deceleration time 2	49	C9	2	○	○	○	○	○	○
266	Power failure deceleration time switchover frequency	4A	CA	2	○	○	○	○	○	○
267	Terminal 4 input selection	4B	CB	2	○	○	○	○	×	○
268	Monitor decimal digits selection	4C	CC	2	○	○	○	○	○	○
269	Parameter for manufacturer setting. Do not set.									
289	Inverter output terminal filter	61	E1	2	○	○	○	○	×	○
290	Monitor negative output selection	62	E2	2	○	○	○	○	○	○
291	Pulse train I/O selection	63	E3	2	○	○	○	○	×	○
294	UV avoidance voltage gain	66	E6	2	○	○	○	○	○	○
295	Frequency change increment amount setting	67	E7	2	○	○	○	○	○	○
296	Password lock level	68	E8	2	○	○	○	○	×	○
297	Password lock/unlock	69	E9	2	○	○	○	○	○*5	○
298	Frequency search gain	6A	EA	2	○	○	×	○	×	○
299	Rotation direction detection selection at restarting	6B	EB	2	○	○	×	○	○	○
300	BCD input bias AX	00	80	3	○	○	○	○	○	○
301	BCD input gain AX	01	81	3	○	○	○	○	○	○
302	BIN input bias AX	02	82	3	○	○	○	○	○	○
303	BIN input gain AX	03	83	3	○	○	○	○	○	○
304	Digital input and analog input compensation enable/disable selection AX	04	84	3	○	○	○	○	○	○
305	Read timing operation selection AX	05	85	3	○	○	○	○	○	○
306	Analog output signal selection AY	06	86	3	○	○	○	○	○	○
307	Setting for zero analog output AY	07	87	3	○	○	○	○	○	○

正忠科技有限公司
購買、維修此手冊零組件
電話：037-466333
Email: service@repairtw.com
Line ID: @zzzz
www.repairtw.com

Pr.	Name	Instruction code*1			Control method*2			Parameter		
		Read	Write	Extended	V/F	Magnetic flux	PM	Copy*3	Clear*3	All clear*3
308	Setting for maximum analog output AY	08	88	3	○	○	○	○	○	○
309	Analog output signal voltage/current switchover AY	09	89	3	○	○	○	○	○	○
310	Analog meter voltage output selection AY	0A	8A	3	○	○	○	○	○	○
311	Setting for zero analog meter voltage output AY	0B	8B	3	○	○	○	○	○	○
312	Setting for maximum analog meter voltage output AY	0C	8C	3	○	○	○	○	○	○
313	DO0 output selection	0D	8D	3	○	○	○	○	×	○
314	DO1 output selection	0E	8E	3	○	○	○	○	×	○
315	DO2 output selection	0F	8F	3	○	○	○	○	×	○
316	DO3 output selection	10	90	3	○	○	○	○	×	○
317	DO4 output selection	11	91	3	○	○	○	○	×	○
318	DO5 output selection	12	92	3	○	○	○	○	×	○
319	DO6 output selection	13	93	3	○	○	○	○	×	○
320	RA1 output selection	14	94	3	○	○	○	○	×	○
321	RA2 output selection	15	95	3	○	○	○	○	×	○
322	RA3 output selection	16	96	3	○	○	○	○	×	○
323	AM0 0V adjustment AY	17	97	3	○	○	○	○	×	○
324	AM1 0mA adjustment AY	18	98	3	○	○	○	○	×	○
329	Digital input unit selection AX	1D	9D	3	○	○	○	○	×	○
331	RS-485 communication station number	1F	9F	3	○	○	○	○	○*4	○*4
332	RS-485 communication speed	20	A0	3	○	○	○	○	○*4	○*4
333	RS-485 communication stop bit length / data length	21	A1	3	○	○	○	○	○*4	○*4
334	RS-485 communication parity check selection	22	A2	3	○	○	○	○	○*4	○*4
335	RS-485 communication retry count	23	A3	3	○	○	○	○	○*4	○*4
336	RS-485 communication check time interval	24	A4	3	○	○	○	○	○*4	○*4
337	RS-485 communication waiting time setting	25	A5	3	○	○	○	○	○*4	○*4
338	Communication operation command source	26	A6	3	○	○	○	○	○*4	○*4
339	Communication speed command source	27	A7	3	○	○	○	○	○*4	○*4
340	Communication startup mode selection	28	A8	3	○	○	○	○	○*4	○*4
341	RS-485 communication CR/LF selection	29	A9	3	○	○	○	○	○*4	○*4
342	Communication EEPROM write selection	2A	AA	3	○	○	○	○	○	○
343	Communication error count	2B	AB	3	○	○	○	×	×	×
345	DeviceNet address ND	2D	AD	3	○	○	○	○	○*4	○*4
346	DeviceNet baud rate ND	2E	AE	3	○	○	○	○	○*4	○*4
349	Communication reset selection NC NCE ND NP NF NL	31	B1	3	○	○	○	○	○*4	○*4
374	Overspeed detection level	4A	CA	3	×	×	○	○	○	○
384	Input pulse division scaling factor	54	D4	3	○	○	○	○	○	○
385	Frequency for zero input pulse	55	D5	3	○	○	○	○	○	○
386	Frequency for maximum input pulse	56	D6	3	○	○	○	○	○	○
387	Initial communication delay time NL	57	D7	3	○	○	○	○	○	○
388	Send time interval at heart beat NL	58	D8	3	○	○	○	○	○	○
389	Minimum sending time at heart beat NL	59	D9	3	○	○	○	○	○	○
390	% setting reference frequency	5A	DA	3	○	○	○	○	○	○

上正科技有限公司
購買、維修 此手冊零組件
電話： 037-466333
Email: service@repairtw.com
Line id: @zzzz
www.repairtw.com

Pr.	Name	Instruction code*1			Control method*2			Parameter		
		Read	Write	Extended	V/F	Magnetic flux	PM	Copy*3	Clear*3	All clear*3
391	Receive time interval at heart beat NL	5B	DB	3	○	○	○	○	○	○
392	Event driven detection width NL	5C	DC	3	○	○	○	○	○	○
414	PLC function operation selection	0E	8E	4	○	○	○	○	×	×
415	Inverter operation lock mode setting	0F	8F	4	○	○	○	○	○	○
416	Pre-scale function selection	10	90	4	○	○	○	○	○	○
417	Pre-scale setting value	11	91	4	○	○	○	○	○	○
418	Extension output terminal filter AY AR	12	92	4	○	○	○	○	×	○
434	Network number (CC-Link IE) NCE	22	A2	4	○	○	○	○	○*4	○*4
435	Station number (CC-Link IE) NCE	23	A3	4	○	○	○	○	○*4	○*4
450	Second applied motor	32	B2	4	○	○	○	○	○	○
453	Second motor capacity	35	B5	4	×	○	○	○	○	○
454	Number of second motor poles	36	B6	4	×	○	○	○	○	○
455	Second motor excitation current	37	B7	4	×	○	×	○	×	○
456	Rated second motor voltage	38	B8	4	×	○	○	○	○	○
457	Rated second motor frequency	39	B9	4	×	○	○	○	○	○
458	Second motor constant (R1)	3A	BA	4	×	○	○	○	×	○
459	Second motor constant (R2)	3B	BB	4	×	○	×	○	×	○
460	Second motor constant (L1) / d-axis inductance (Ld)	3C	BC	4	×	○	○	○	×	○
461	Second motor constant (L2) / q-axis inductance (Lq)	3D	BD	4	×	○	○	○	×	○
462	Second motor constant (X)	3E	BE	4	×	○	×	○	×	○
463	Second motor auto tuning setting/ status	3F	BF	4	×	○	○	○	×	○
495	Remote output selection	5F	DF	4	○	○	○	○	○	○
496	Remote output data 1	60	E0	4	○	○	○	×	×	×
497	Remote output data 2	61	E1	4	○	○	○	×	×	×
498	PLC function flash memory clear	62	E2	4	○	○	○	×	×	×
500	Communication error execution waiting time NC NCE ND NP NF NL	00	80	5	○	○	○	○	○	○
501	Communication error occurrence count display NC NCE ND NP NF NL	01	81	5	○	○	○	×	○	○
502	Stop mode selection at communication error	02	82	5	○	○	○	○	○	○
503	Maintenance timer 1	03	83	5	○	○	○	×	×	×
504	Maintenance timer 1 warning output set time	04	84	5	○	○	○	○	×	○
505	Speed setting reference	05	85	5	○	○	○	○	○	○
514	Emergency drive dedicated waiting time	0E	8E	5	○	○	○	○	×	○
515	Emergency drive dedicated retry count	0F	8F	5	○	○	○	○	×	○
522	Output stop frequency	16	96	5	○	○	○	○	○	○
523	Emergency drive mode selection	17	97	5	○	○	○	○	×	○
524	Emergency drive running speed	18	98	5	○	○	○	○	×	○
539	MODBUS RTU communication check time interval	27	A7	5	○	○	○	○	○*4	○*4
541	Frequency command sign selection NC NCE NP	29	A9	5	○	○	○	○	○*4	○*4
542	Communication station number (CC-Link) NC	2A	AA	5	○	○	○	○	○*4	○*4
543	Baud rate selection (CC-Link) NC	2B	AB	5	○	○	○	○	○*4	○*4
544	CC-Link extended setting NC	2C	AC	5	○	○	○	○	○*4	○*4
547	USB communication station number	2F	AF	5	○	○	○	○	○*4	○*4
548	USB communication check time interval	30	B0	5	○	○	○	○	○*4	○*4
549	Protocol selection	31	B1	5	○	○	○	○	○*4	○*4
550	NET mode operation command source selection	32	B2	5	○	○	○	○	○*4	○*4

上正科技有限公司
購買、維修此手冊零組件
電話：037-466333
Email: service@repairtw.com
Line id: @zzz
www.repairtw.com

Pr.	Name	Instruction code*1			Control method*2			Parameter		
		Read	Write	Extended	V/F	Magnetic flux	PM	Copy*3	Clear*3	All clear*3
551	PU mode operation command source selection	33	B3	5	○	○	○	○	○*4	○*4
552	Frequency jump range	34	B4	5	○	○	○	○	○	○
553	PID deviation limit	35	B5	5	○	○	○	○	○	○
554	PID signal operation selection	36	B6	5	○	○	○	○	○	○
555	Current average time	37	B7	5	○	○	○	○	○	○
556	Data output mask time	38	B8	5	○	○	○	○	○	○
557	Current average value monitor signal output reference current	39	B9	5	○	○	○	○	○	○
560	Second frequency search gain	3C	BC	5	○	○	×	○	×	○
561	PTC thermistor protection level	3D	BD	5	○	○	○	○	×	○
563	Energization time carrying-over times	3F	BF	5	○	○	○	×	×	×
564	Operating time carrying-over times	40	C0	5	○	○	○	×	×	×
565	Second motor excitation current break point	41	C1	5	×	○	×	○	×	○
566	Second motor excitation current low-speed scaling factor	42	C2	5	×	○	×	○	×	○
569	Second motor speed control gain	45	C5	5	×	○	×	○	×	○
570	Multiple rating setting	46	C6	5	○	○	○	○	×	×
571	Holding time at a start	47	C7	5	○	○	×	○	○	○
573	4 mA input check selection	49	C9	5	○	○	○	○	○	○
574	Second motor online auto tuning	4A	CA	5	×	○	○	○	○	○
575	Output interruption detection time	4B	CB	5	○	○	○	○	○	○
576	Output interruption detection level	4C	CC	5	○	○	○	○	○	○
577	Output interruption cancel level	4D	CD	5	○	○	○	○	○	○
578	Auxiliary motor operation selection	4E	CE	5	○	○	○	○	○	○
579	Motor connection function selection	4F	CF	5	○	○	○	○	○	○
580	MC switchover interlock time (multi-pump)	50	D0	5	○	○	○	○	○	○
581	Start waiting time (multi-pump)	51	D1	5	○	○	○	○	○	○
582	Auxiliary motor connection-time deceleration time	52	D2	5	○	○	○	○	○	○
583	Auxiliary motor disconnection-time acceleration time	53	D3	5	○	○	○	○	○	○
584	Auxiliary motor 1 starting frequency	54	D4	5	○	○	○	○	○	○
585	Auxiliary motor 2 starting frequency	55	D5	5	○	○	○	○	○	○
586	Auxiliary motor 3 starting frequency	56	D6	5	○	○	○	○	○	○
587	Auxiliary motor 1 stopping frequency	57	D7	5	○	○	○	○	○	○
588	Auxiliary motor 2 stopping frequency	58	D8	5	○	○	○	○	○	○
589	Auxiliary motor 3 stopping frequency	59	D9	5	○	○	○	○	○	○
590	Auxiliary motor start detection time	5A	DA	5	○	○	○	○	○	○
591	Auxiliary motor stop detection time	5B	DB	5	○	○	○	○	○	○
592	Traverse function selection	5C	DC	5	○	○	○	○	○	○
593	Maximum amplitude amount	5D	DD	5	○	○	○	○	○	○
594	Amplitude compensation amount during deceleration	5E	DE	5	○	○	○	○	○	○
595	Amplitude compensation amount during acceleration	5F	DF	5	○	○	○	○	○	○
596	Amplitude acceleration time	60	E0	5	○	○	○	○	○	○
597	Amplitude deceleration time	61	E1	5	○	○	○	○	○	○
598	Undervoltage level	62	E2	5	○	○	×	○	○	○
599	X10 terminal input selection	63	E3	5	○	○	○	○	○	○
600	First free thermal reduction frequency 1	00	80	6	○	○	○	○	○	○
601	First free thermal reduction ratio 1	01	81	6	○	○	○	○	○	○
602	First free thermal reduction frequency 2	02	82	6	○	○	○	○	○	○
603	First free thermal reduction ratio 2	03	83	6	○	○	○	○	○	○

上北科技有限公司
購買、維修、此手冊零組件
電話： 037-466333
Email: service@repairtw.com
Line id: @zzzz
www.repairtw.com

Pr.	Name	Instruction code*1			Control method*2			Parameter		
		Read	Write	Extended	V/F	Magnetic flux	PM	Copy*3	Clear*3	All clear*3
604	First free thermal reduction frequency 3	04	84	6	○	○	○	○	○	○
606	Power failure stop external signal input selection	06	86	6	○	○	○	○	○	○
607	Motor permissible load level	07	87	6	○	○	○	○	○	○
608	Second motor permissible load level	08	88	6	○	○	○	○	○	○
609	PID set point/deviation input selection	09	89	6	○	○	○	○	○	○
610	PID measured value input selection	0A	8A	6	○	○	○	○	○	○
611	Acceleration time at a restart	0B	8B	6	○	○	○	○	○	○
617	Reverse rotation excitation current low-speed scaling factor	11	91	6	×	○	×	○	×	○
653	Speed smoothing control	35	B5	6	○	×	×	○	○	○
654	Speed smoothing cutoff frequency	36	B6	6	○	×	×	○	○	○
655	Analog remote output selection	37	B7	6	○	○	○	○	○	○
656	Analog remote output 1	38	B8	6	○	○	○	×	×	×
657	Analog remote output 2	39	B9	6	○	○	○	×	×	×
658	Analog remote output 3	3A	BA	6	○	○	○	×	×	×
659	Analog remote output 4	3B	BB	6	○	○	○	×	×	×
660	Increased magnetic excitation deceleration operation selection	3C	BC	6	○	○	×	○	○	○
661	Magnetic excitation increase rate	3D	BD	6	○	○	×	○	○	○
662	Increased magnetic excitation current level	3E	BE	6	○	○	×	○	○	○
663	Control circuit temperature signal output level	3F	BF	6	○	○	○	○	○	○
665	Regeneration avoidance frequency gain	41	C1	6	○	○	○	○	○	○
668	Power failure stop frequency gain	44	C4	6	○	○	○	○	○	○
673	SF-PR slip amount adjustment operation selection	49	C9	6	○	×	×	○	○	○
674	SF-PR slip amount adjustment gain	4A	CA	6	○	×	×	○	○	○
675	User parameter auto storage function selection	4B	CB	6	○	○	○	○	○	○
684	Tuning data unit switchover	54	D4	6	×	○	○	○	○	○
686	Maintenance timer 2	56	D6	6	○	○	○	×	×	×
687	Maintenance timer 2 warning output set time	57	D7	6	○	○	○	○	×	○
688	Maintenance timer 3	58	D8	6	○	○	○	×	×	×
689	Maintenance timer 3 warning output set time	59	D9	6	○	○	○	○	×	○
692	Second free thermal reduction frequency 1	5C	DC	6	○	○	○	○	○	○
693	Second free thermal reduction ratio 1	5D	DD	6	○	○	○	○	○	○
694	Second free thermal reduction frequency 2	5E	DE	6	○	○	○	○	○	○
695	Second free thermal reduction ratio 2	5F	DF	6	○	○	○	○	○	○
696	Second free thermal reduction frequency 3	60	E0	6	○	○	○	○	○	○
699	Input terminal filter	63	E3	6	○	○	○	○	×	○
702	Maximum motor frequency	02	82	7	×	×	○	○	○	○
706	Induced voltage constant (phi f)	06	86	7	×	×	○	○	×	○
707	Motor inertia (integer)	07	87	7	×	×	○	○	○	○
711	Motor Ld decay ratio	0B	8B	7	×	×	○	○	×	○
712	Motor Lq decay ratio	0C	8C	7	×	×	○	○	×	○
717	Starting resistance tuning compensation	11	91	7	×	×	○	○	×	○
721	Starting magnetic pole position detection pulse width	15	95	7	×	×	○	○	×	○
724	Motor inertia (exponent)	18	98	7	×	×	○	○	○	○
725	Motor protection current level	19	99	7	×	×	○	○	○	○

上正科技有限公司
購買、維修 此手冊零組件
電話：037-466333
Email: service@repairtw.com
Line Id: @zzzz
www.repairtw.com

Pr.	Name	Instruction code*1			Control method*2			Parameter		
		Read	Write	Extended	V/F	Magnetic flux	PM	Copy*3	Clear*3	All clear*3
726	Auto Baudrate/Max Master	1A	9A	7	○	○	○	○	○*4	○*4
727	Max Info Frames	1B	9B	7	○	○	○	○	○*4	○*4
728	Device instance number (Upper 3 digits)	1C	9C	7	○	○	○	○	○*4	○*4
729	Device instance number (Lower 4 digits)	1D	9D	7	○	○	○	○	○*4	○*4
738	Second motor induced voltage constant (phi f)	26	A6	7	×	×	○	○	×	○
739	Second motor Ld decay ratio	27	A7	7	×	×	○	○	×	○
740	Second motor Lq decay ratio	28	A8	7	×	×	○	○	×	○
741	Second starting resistance tuning compensation	29	A9	7	×	×	○	○	×	○
742	Second motor magnetic pole detection pulse width	2A	AA	7	×	×	○	○	×	○
743	Second motor maximum frequency	2B	AB	7	×	×	○	○	○	○
744	Second motor inertia (integer)	2C	AC	7	×	×	○	○	○	○
745	Second motor inertia (exponent)	2D	AD	7	×	×	○	○	○	○
746	Second motor protection current level	2E	AE	7	×	×	○	○	○	○
753	Second PID action selection	35	B5	7	○	○	○	○	○	○
754	Second PID control automatic switchover frequency	36	B6	7	○	○	○	○	○	○
755	Second PID action set point	37	B7	7	○	○	○	○	○	○
756	Second PID proportional band	38	B8	7	○	○	○	○	○	○
757	Second PID integral time	39	B9	7	○	○	○	○	○	○
758	Second PID differential time	3A	BA	7	○	○	○	○	○	○
759	PID unit selection	3B	BB	7	○	○	○	○	○	○
760	Pre-charge fault selection	3C	BC	7	○	○	○	○	○	○
761	Pre-charge ending level	3D	BD	7	○	○	○	○	○	○
762	Pre-charge ending time	3E	BE	7	○	○	○	○	○	○
763	Pre-charge upper detection level	3F	BF	7	○	○	○	○	○	○
764	Pre-charge time limit	40	C0	7	○	○	○	○	○	○
765	Second pre-charge fault selection	41	C1	7	○	○	○	○	○	○
766	Second pre-charge ending level	42	C2	7	○	○	○	○	○	○
767	Second pre-charge ending time	43	C3	7	○	○	○	○	○	○
768	Second pre-charge upper detection level	44	C4	7	○	○	○	○	○	○
769	Second pre-charge time limit	45	C5	7	○	○	○	○	○	○
774	Operation panel monitor selection 1	4A	CA	7	○	○	○	○	○	○
775	Operation panel monitor selection 2	4B	CB	7	○	○	○	○	○	○
776	Operation panel monitor selection 3	4C	CC	7	○	○	○	○	○	○
777	4 mA input fault operation frequency	4D	CD	7	○	○	○	○	○	○
778	4 mA input check filter	4E	CE	7	○	○	○	○	○	○
779	Operation frequency during communication error	4F	CF	7	○	○	○	○	○	○
791	Acceleration time in low-speed range	5B	DB	7	×	×	○	○	○	○
792	Deceleration time in low-speed range	5C	DC	7	×	×	○	○	○	○
799	Pulse increment setting for output power	63	E3	7	○	○	○	○	○	○
800	Control method selection	00	80	8	○	○	○	○	○	○
820	Speed control P gain 1	14	94	8	×	×	○	○	○	○
821	Speed control integral time 1	15	95	8	×	×	○	○	○	○
822	Speed setting filter 1	16	96	8	×	×	○	○	○	○
824	Torque control P gain 1 (current loop proportional gain)	18	98	8	×	×	○	○	○	○
825	Torque control integral time 1 (current loop integral time)	19	99	8	×	×	○	○	○	○
827	Torque detection filter 1	1B	9B	8	×	×	○	○	○	○
828	Parameter for manufacturer setting. Do not set.									
830	Speed control P gain 2	1E	9E	8	×	×	○	○	○	○

上正科技有限公司
購買 維修 此手冊零組件
電話： 037-466333
Email: service@repairtw.com
line id: @zzzz
www.repairtw.com

Pr.	Name	Instruction code*1			Control method*2			Parameter		
		Read	Write	Extended	V/F	Magnetic flux	PM	Copy*3	Clear*3	All clear*3
831	Speed control integral time 2	1F	9F	8	×	×	○	○	○	○
832	Speed setting filter 2	20	A0	8	×	×	○	○	○	○
834	Torque control P gain 2 (current loop proportional gain)	22	A2	8	×	×	○	○	○	○
835	Torque control integral time 2 (current loop integral time)	23	A3	8	×	×	○	○	○	○
837	Torque detection filter 2	25	A5	8	×	×	○	○	○	○
849	Analog input offset adjustment	31	B1	8	○	○	○	○	○	○
858	Terminal 4 function assignment	3A	BA	8	○	○	○	○	×	○
859	Torque current/Rated PM motor current	3B	BB	8	×	○	○	○	×	○
860	Second motor torque current/Rated PM motor current	3C	BC	8	×	○	○	○	×	○
864	Torque detection	40	C0	8	×	×	○	○	○	○
866	Torque monitoring reference	42	C2	8	×	○	○	○	○	○
867	AM output filter	43	C3	8	○	○	○	○	○	○
868	Terminal 1 function assignment	44	C4	8	○	○	○	○	×	○
869	Current output filter	45	C5	8	○	○	○	○	○	○
870	Speed detection hysteresis	46	C6	8	○	○	○	○	○	○
872	Input phase loss protection selection	48	C8	8	○	○	○	○	○	○
874	OLT level setting	4A	CA	8	×	×	○	○	○	○
882	Regeneration avoidance operation selection	52	D2	8	○	○	○	○	○	○
883	Regeneration avoidance operation level	53	D3	8	○	○	○	○	○	○
884	Regeneration avoidance at deceleration detection sensitivity	54	D4	8	○	○	○	○	○	○
885	Regeneration avoidance compensation frequency limit value	55	D5	8	○	○	○	○	○	○
886	Regeneration avoidance voltage gain	56	D6	8	○	○	○	○	○	○
888	Free parameter 1	58	D8	8	○	○	○	○	×	×
889	Free parameter 2	59	D9	8	○	○	○	○	×	×
891	Cumulative power monitor digit shifted times	5B	DB	8	○	○	○	○	○	○
892	Load factor	5C	DC	8	○	○	○	○	○	○
893	Energy saving monitor reference (motor capacity)	5D	DD	8	○	○	○	○	○	○
894	Control selection during commercial power-supply operation	5E	DE	8	○	○	○	○	○	○
895	Power saving rate reference value	5F	DF	8	○	○	○	○	○	○
896	Power unit cost	60	E0	8	○	○	○	○	○	○
897	Power saving monitor average time	61	E1	8	○	○	○	○	○	○
898	Power saving cumulative monitor clear	62	E2	8	○	○	○	○	×	○
899	Operation time rate (estimated value)	63	E3	8	○	○	○	○	○	○
C0 (900)	FM/CA terminal calibration	5C	DC	1	○	○	○	○	×	○
C1 (901)	AM terminal calibration	5D	DD	1	○	○	○	○	×	○
C2 (902)	Terminal 2 frequency setting bias frequency	5E	DE	1	○	○	○	○	×	○
C3 (902)	Terminal 2 frequency setting bias	5E	DE	1	○	○	○	○	×	○
125 (903)	Terminal 2 frequency setting gain frequency	5F	DF	1	○	○	○	○	×	○
C4 (903)	Terminal 2 frequency setting gain	5F	DF	1	○	○	○	○	×	○
C5 (904)	Terminal 4 frequency setting bias frequency	60	E0	1	○	○	○	○	×	○
C6 (904)	Terminal 4 frequency setting bias	60	E0	1	○	○	○	○	×	○

上正科技有限公司
購買、維修 此手冊零組件
電話：037-466333
Email: service@repairtw.com
Line id: @zzzz
www.repairtw.com

Pr.	Name	Instruction code*1			Control method*2			Parameter		
		Read	Write	Extended	V/F	Magnetic flux	PM	Copy*3	Clear*3	All clear*3
126 (905)	Terminal 4 frequency setting gain frequency	61	E1	1	○	○	○	○	×	○
C7 (905)	Terminal 4 frequency setting gain	61	E1	1	○	○	○	○	×	○
C12 (917)	Terminal 1 bias frequency (speed)	11	91	9	×	×	○	○	×	○
C13 (917)	Terminal 1 bias (speed)	11	91	9	×	×	○	○	×	○
C14 (918)	Terminal 1 gain frequency (speed)	12	92	9	×	×	○	○	×	○
C15 (918)	Terminal 1 gain (speed)	12	92	9	×	×	○	○	×	○
C16 (919)	Terminal 1 bias command (torque)	13	93	9	×	×	○	○	×	○
C17 (919)	Terminal 1 bias (torque)	13	93	9	×	×	○	○	×	○
C18 (920)	Terminal 1 gain command (torque)	14	94	9	×	×	○	○	×	○
C19 (920)	Terminal 1 gain (torque)	14	94	9	×	×	○	○	×	○
C8 (930)	Current output bias signal	1E	9E	9	○	○	○	○	○	○
C9 (930)	Current output bias current	1E	9E	9	○	○	○	○	○	○
C10 (931)	Current output gain signal	1F	9F	9	○	○	○	○	○	○
C11 (931)	Current output gain current	1F	9F	9	○	○	○	○	○	○
C38 (932)	Terminal 4 bias command (torque)	20	A0	9	×	×	○	○	×	○
C39 (932)	Terminal 4 bias (torque)	20	A0	9	×	×	○	○	×	○
C40 (933)	Terminal 4 gain command (torque)	21	A1	9	×	×	○	○	×	○
C41 (933)	Terminal 4 gain (torque)	21	A1	9	×	×	○	○	×	○
C42 (934)	PID display bias coefficient	22	A2	9	○	○	○	○	×	○
C43 (934)	PID display bias analog value	22	A2	9	○	○	○	○	×	○
C44 (935)	PID display gain coefficient	23	A3	9	○	○	○	○	×	○
C45 (935)	PID display gain analog value	23	A3	9	○	○	○	○	×	○
977	Input voltage mode selection	4D	CD	9	○	○	○	○	×	×
989	Parameter copy alarm release	59	D9	9	○	○	○	○	×	○
990	PU buzzer control	5A	DA	9	○	○	○	○	○	○
991	PU contrast adjustment	5B	DB	9	○	○	○	○	×	○
992	Operation panel setting dial push monitor selection	5C	DC	9	○	○	○	○	○	○
997	Fault initiation	61	E1	9	○	○	○	×	○	○
998	PM parameter initialization	62	E2	9	○	○	○	○	○	○
999	Automatic parameter setting	63	E3	9	○	○	○	×	×	○
1000	Direct setting selection	00	80	A	○	○	○	○	○	○
1002	Lq tuning target current adjustment coefficient	02	82	A	×	×	○	○	○	○
1006	Clock (year)	06	86	A	○	○	○	×	×	×
1007	Clock (month, day)	07	87	A	○	○	○	×	×	×
1008	Clock (hour, minute)	08	88	A	○	○	○	×	×	×
1013	Emergency drive running speed after retry reset	0D	8D	A	○	○	○	○	×	○

上正科技有限公司
購買、維修、此手冊零組件
電話： 037-466333
Email: service@repairtw.com
Line id: @zzzz
www.repairtw.com

Pr.	Name	Instruction code*1			Control method*2			Parameter		
		Read	Write	Extended	V/F	Magnetic flux	PM	Copy*3	Clear*3	All clear*3
1015	Integral stop selection at limited frequency	0F	8F	A	○	○	○	○	○	○
1016	PTC thermistor protection detection time	10	90	A	○	○	○	○	×	○
1018	Monitor with sign selection	12	92	A	○	○	○	○	○	○
1019	Analog meter voltage negative output selection AY	13	93	A	○	○	○	○	○	○
1020	Trace operation selection	14	94	A	○	○	○	○	○	○
1021	Trace mode selection	15	95	A	○	○	○	○	○	○
1022	Sampling cycle	16	96	A	○	○	○	○	○	○
1023	Number of analog channels	17	97	A	○	○	○	○	○	○
1024	Sampling auto start	18	98	A	○	○	○	○	○	○
1025	Trigger mode selection	19	99	A	○	○	○	○	○	○
1026	Number of sampling before trigger	1A	9A	A	○	○	○	○	○	○
1027	Analog source selection (1ch)	1B	9B	A	○	○	○	○	○	○
1028	Analog source selection (2ch)	1C	9C	A	○	○	○	○	○	○
1029	Analog source selection (3ch)	1D	9D	A	○	○	○	○	○	○
1030	Analog source selection (4ch)	1E	9E	A	○	○	○	○	○	○
1031	Analog source selection (5ch)	1F	9F	A	○	○	○	○	○	○
1032	Analog source selection (6ch)	20	A0	A	○	○	○	○	○	○
1033	Analog source selection (7ch)	21	A1	A	○	○	○	○	○	○
1034	Analog source selection (8ch)	22	A2	A	○	○	○	○	○	○
1035	Analog trigger channel	23	A3	A	○	○	○	○	○	○
1036	Analog trigger operation selection	24	A4	A	○	○	○	○	○	○
1037	Analog trigger level	25	A5	A	○	○	○	○	○	○
1038	Digital source selection (1ch)	26	A6	A	○	○	○	○	○	○
1039	Digital source selection (2ch)	27	A7	A	○	○	○	○	○	○
1040	Digital source selection (3ch)	28	A8	A	○	○	○	○	○	○
1041	Digital source selection (4ch)	29	A9	A	○	○	○	○	○	○
1042	Digital source selection (5ch)	2A	AA	A	○	○	○	○	○	○
1043	Digital source selection (6ch)	2B	AB	A	○	○	○	○	○	○
1044	Digital source selection (7ch)	2C	AC	A	○	○	○	○	○	○
1045	Digital source selection (8ch)	2D	AD	A	○	○	○	○	○	○
1046	Digital trigger channel	2E	AE	A	○	○	○	○	○	○
1047	Digital trigger operation selection	2F	AF	A	○	○	○	○	○	○
1048	Display-off waiting time	30	B0	A	○	○	○	○	○	○
1049	USB host reset	31	B1	A	○	○	○	×	○	○
1106	Torque monitor filter	06	86	B	○	○	○	○	○	○
1107	Running speed monitor filter	07	87	B	○	○	○	○	○	○
1108	Excitation current monitor filter	08	88	B	○	○	○	○	○	○
1132	Pre-charge change increment amount	20	A0	B	○	○	○	○	○	○
1133	Second pre-charge change increment amount	21	A1	B	○	○	○	○	○	○
1136	Second PID display bias coefficient	24	A4	B	○	○	○	○	×	○
1137	Second PID display bias analog value	25	A5	B	○	○	○	○	×	○
1138	Second PID display gain coefficient	26	A6	B	○	○	○	○	×	○
1139	Second PID display gain analog value	27	A7	B	○	○	○	○	×	○
1140	Second PID set point/deviation input selection	28	A8	B	○	○	○	○	○	○
1141	Second PID measured value input selection	29	A9	B	○	○	○	○	○	○
1142	Second PID unit selection	2A	AA	B	○	○	○	○	○	○
1143	Second PID upper limit	2B	AB	B	○	○	○	○	○	○
1144	Second PID lower limit	2C	AC	B	○	○	○	○	○	○
1145	Second PID deviation limit	2D	AD	B	○	○	○	○	○	○
1146	Second PID signal operation selection	2E	AE	B	○	○	○	○	○	○
1147	Second output interruption detection time	2F	AF	B	○	○	○	○	○	○

正新技有限公司
購買、維修此手冊零組件
電話：037-466333
Email: service@repairtw.com
Line id: @zzz
www.repairtw.com

Pr.	Name	Instruction code*1			Control method*2			Parameter		
		Read	Write	Extended	V/F	Magnetic flux	PM	Copy*3	Clear*3	All clear*3
1148	Second output interruption detection level	30	B0	B	○	○	○	○	○	○
1149	Second output interruption cancel level	31	B1	B	○	○	○	○	○	○
1150	User parameter 1	32	B2	B	○	○	○	○	○	○
1151	User parameter 2	33	B3	B	○	○	○	○	○	○
1152	User parameter 3	34	B4	B	○	○	○	○	○	○
1153	User parameter 4	35	B5	B	○	○	○	○	○	○
1154	User parameter 5	36	B6	B	○	○	○	○	○	○
1155	User parameter 6	37	B7	B	○	○	○	○	○	○
1156	User parameter 7	38	B8	B	○	○	○	○	○	○
1157	User parameter 8	39	B9	B	○	○	○	○	○	○
1158	User parameter 9	3A	BA	B	○	○	○	○	○	○
1159	User parameter 10	3B	BB	B	○	○	○	○	○	○
1160	User parameter 11	3C	BC	B	○	○	○	○	○	○
1161	User parameter 12	3D	BD	B	○	○	○	○	○	○
1162	User parameter 13	3E	BE	B	○	○	○	○	○	○
1163	User parameter 14	3F	BF	B	○	○	○	○	○	○
1164	User parameter 15	40	C0	B	○	○	○	○	○	○
1165	User parameter 16	41	C1	B	○	○	○	○	○	○
1166	User parameter 17	42	C2	B	○	○	○	○	○	○
1167	User parameter 18	43	C3	B	○	○	○	○	○	○
1168	User parameter 19	44	C4	B	○	○	○	○	○	○
1169	User parameter 20	45	C5	B	○	○	○	○	○	○
1170	User parameter 21	46	C6	B	○	○	○	○	○	○
1171	User parameter 22	47	C7	B	○	○	○	○	○	○
1172	User parameter 23	48	C8	B	○	○	○	○	○	○
1173	User parameter 24	49	C9	B	○	○	○	○	○	○
1174	User parameter 25	4A	CA	B	○	○	○	○	○	○
1175	User parameter 26	4B	CB	B	○	○	○	○	○	○
1176	User parameter 27	4C	CC	B	○	○	○	○	○	○
1177	User parameter 28	4D	CD	B	○	○	○	○	○	○
1178	User parameter 29	4E	CE	B	○	○	○	○	○	○
1179	User parameter 30	4F	CF	B	○	○	○	○	○	○
1180	User parameter 31	50	D0	B	○	○	○	○	○	○
1181	User parameter 32	51	D1	B	○	○	○	○	○	○
1182	User parameter 33	52	D2	B	○	○	○	○	○	○
1183	User parameter 34	53	D3	B	○	○	○	○	○	○
1184	User parameter 35	54	D4	B	○	○	○	○	○	○
1185	User parameter 36	55	D5	B	○	○	○	○	○	○
1186	User parameter 37	56	D6	B	○	○	○	○	○	○
1187	User parameter 38	57	D7	B	○	○	○	○	○	○
1188	User parameter 39	58	D8	B	○	○	○	○	○	○
1189	User parameter 40	59	D9	B	○	○	○	○	○	○
1190	User parameter 41	5A	DA	B	○	○	○	○	○	○
1191	User parameter 42	5B	DB	B	○	○	○	○	○	○
1192	User parameter 43	5C	DC	B	○	○	○	○	○	○
1193	User parameter 44	5D	DD	B	○	○	○	○	○	○
1194	User parameter 45	5E	DE	B	○	○	○	○	○	○
1195	User parameter 46	5F	DF	B	○	○	○	○	○	○
1196	User parameter 47	60	E0	B	○	○	○	○	○	○
1197	User parameter 48	61	E1	B	○	○	○	○	○	○
1198	User parameter 49	62	E2	B	○	○	○	○	○	○
1199	User parameter 50	63	E3	B	○	○	○	○	○	○
1211	PID gain tuning timeout time	0B	8B	C	○	○	○	○	○	○
1212	Step manipulated amount	0C	8C	C	○	○	○	○	○	○
1213	Step responding sampling cycle	0D	8D	C	○	○	○	○	○	○
1214	Timeout time after the maximum slope	0E	8E	C	○	○	○	○	○	○

上耳科技有限公司
購買 維修 此手冊零組件
電話 (07)-466333
Email: service@repairtw.com
Line id: @2222
www.repairtw.com

Pr.	Name	Instruction code*1			Control method*2			Parameter		
		Read	Write	Extended	V/F	Magnetic flux	PM	Copy*3	Clear*3	All clear*3
1215	Limit cycle output upper limit	0F	8F	C	○	○	○	○	○	○
1216	Limit cycle output lower limit	10	90	C	○	○	○	○	○	○
1217	Limit cycle hysteresis	11	91	C	○	○	○	○	○	○
1218	PID gain tuning setting	12	92	C	○	○	○	○	○	○
1219	PID gain tuning start/status	13	93	C	○	○	○	×	×	×
1361	Detection time for PID output hold	3D	BD	D	○	○	○	○	○	○
1362	PID output hold range	3E	BE	D	○	○	○	○	○	○
1363	PID priming time	3F	BF	D	○	○	○	○	○	○
1364	Stirring time during sleep	40	C0	D	○	○	○	○	○	○
1365	Stirring interval time	41	C1	D	○	○	○	○	○	○
1366	Sleep boost level	42	C2	D	○	○	○	○	○	○
1367	Sleep boost waiting time	43	C3	D	○	○	○	○	○	○
1368	Output interruption cancel time	44	C4	D	○	○	○	○	○	○
1369	Check valve closing completion frequency	45	C5	D	○	○	○	○	○	○
1370	Detection time for PID limiting operation	46	C6	D	○	○	○	○	○	○
1371	PID upper/lower limit pre-warning level range	47	C7	D	○	○	○	○	○	○
1372	PID measured value control set point change amount	48	C8	D	○	○	○	○	○	○
1373	PID measured value control set point change rate	49	C9	D	○	○	○	○	○	○
1374	Auxiliary pressure pump operation starting level	4A	CA	D	○	○	○	○	○	○
1375	Auxiliary pressure pump operation stopping level	4B	CB	D	○	○	○	○	○	○
1376	Auxiliary motor stopping level	4C	CC	D	○	○	○	○	○	○
1377	PID input pressure selection	4D	CD	D	○	○	○	○	○	○
1378	PID input pressure warning level	4E	CE	D	○	○	○	○	○	○
1379	PID input pressure fault level	4F	CF	D	○	○	○	○	○	○
1380	PID input pressure warning set point change amount	50	D0	D	○	○	○	○	○	○
1381	PID input pressure fault operation selection	51	D1	D	○	○	○	○	○	○
1410	Starting times lower 4 digits	0 A	8A	E	○	○	○	×	×	×
1411	Starting times upper 4 digits	0B	8B	E	○	○	○	×	×	×
1412	Motor induced voltage constant (phi f) exponent	0C	8C	E	×	×	○	○	×	○
1413	Second motor induced voltage constant (phi f) exponent	0D	8D	E	×	×	○	○	×	○
1460	PID multistage set point 1	3C	BC	E	○	○	○	○	○	○
1461	PID multistage set point 2	3D	BD	E	○	○	○	○	○	○
1462	PID multistage set point 3	3E	BE	E	○	○	○	○	○	○
1463	PID multistage set point 4	3F	BF	E	○	○	○	○	○	○
1464	PID multistage set point 5	40	C0	E	○	○	○	○	○	○
1465	PID multistage set point 6	41	C1	E	○	○	○	○	○	○
1466	PID multistage set point 7	42	C2	E	○	○	○	○	○	○
1469	Number of cleaning times monitor	45	C5	E	○	○	○	×	×	×
1470	Number of cleaning times setting	46	C6	E	○	○	○	○	○	○
1471	Cleaning trigger selection	47	C7	E	○	○	○	○	○	○
1472	Cleaning reverse rotation frequency	48	C8	E	○	○	○	○	○	○
1473	Cleaning reverse rotation operation time	49	C9	E	○	○	○	○	○	○
1474	Cleaning forward rotation frequency	4A	CA	E	○	○	○	○	○	○
1475	Cleaning forward rotation operation time	4B	CB	E	○	○	○	○	○	○
1476	Cleaning stop time	4C	CC	E	○	○	○	○	○	○
1477	Cleaning acceleration time	4D	CD	E	○	○	○	○	○	○
1478	Cleaning deceleration time	4E	CE	E	○	○	○	○	○	○

上正科技有限公司
購買、維修 此手冊零組件
電話：037-466333
Email: service@repairtw.com
Line Id: @zzzz
www.repairtw.com

Pr.	Name	Instruction code*1			Control method*2			Parameter		
		Read	Write	Extended	V/F	Magnetic flux	PM	Copy*3	Clear*3	All clear*3
1479	Cleaning time trigger	4F	CF	E	○	○	○	○	○	○
1480	Load characteristics measurement mode	50	D0	E	○	○	○	○	○	○
1481	Load characteristics load reference 1	51	D1	E	○	○	○	○	○	○
1482	Load characteristics load reference 2	52	D2	E	○	○	○	○	○	○
1483	Load characteristics load reference 3	53	D3	E	○	○	○	○	○	○
1484	Load characteristics load reference 4	54	D4	E	○	○	○	○	○	○
1485	Load characteristics load reference 5	55	D5	E	○	○	○	○	○	○
1486	Load characteristics maximum frequency	56	D6	E	○	○	○	○	○	○
1487	Load characteristics minimum frequency	57	D7	E	○	○	○	○	○	○
1488	Upper limit warning detection width	58	D8	E	○	○	○	○	○	○
1489	Lower limit warning detection width	59	D9	E	○	○	○	○	○	○
1490	Upper limit fault detection width	5A	DA	E	○	○	○	○	○	○
1491	Lower limit fault detection width	5B	DB	E	○	○	○	○	○	○
1492	Load status detection signal delay time / load reference measurement waiting time	5C	DC	E	○	○	○	○	○	○

上正科技有限公司
購買、維修 此手冊零組件
電話： 037-466333
Email: service@repairtw.com
Line id: @zzzz
www.repairtw.com

9.4 For customers using HMS network options

◆ List of inverter monitor items / command items

The following items can be set using a communication option.

16bit data

No.	Description	Unit	Type	Read/ write
H0000	No data	-	-	-
H0001	Output frequency	0.01 Hz	unsigned	R
H0002	Output current	0.01 A/0.1 A	unsigned	R
H0003	Output voltage	0.1 V	unsigned	R
H0004	reserved	-	-	-
H0005	Frequency setting value	0.01 Hz	unsigned	R
H0006	Motor speed	1 r/min	unsigned	R
H0007	Motor torque	0.1%	unsigned	R
H0008	Converter output voltage	0.1 V	unsigned	R
H0009	reserved	-	-	-
H000A	Electric thermal relay function load factor	0.1%	unsigned	R
H000B	Output current peak value	0.01 A/0.1 A	unsigned	R
H000C	Converter output voltage peak value	0.1 V	unsigned	R
H000D	Input power	0.01 kW/ 0.1 kW	unsigned	R
H000E	Output power	0.01 kW/ 0.1 kW	unsigned	R
H000F	Input terminal status[*1]	-	-	R
H0010	Output terminal status[*1]	-	-	R
H0011	Load meter	0.1%	unsigned	R
H0012	Motor excitation current	0.01 A/0.1 A	unsigned	R
H0013	reserved	-	-	-
H0014	Cumulative energization time	1 h	unsigned	R
H0015 H0016	reserved	-	-	-
H0017	Actual operation time	1 h	unsigned	R
H0018	Motor load factor	0.1%	unsigned	R
H0019	Cumulative power	1 kWh	unsigned	R
H001A to H0021	reserved	-	-	-
H0022	Motor output	0.1 kW	unsigned	R
H0023 to H0025	reserved	-	-	-
H0026	Trace status	-	unsigned	R
H0027	reserved	-	-	-
H0028	PLC function user monitor 1	-	unsigned	R
H0029	PLC function user monitor 2	-	unsigned	R
H002A	PLC function user monitor 3	-	unsigned	R
H002B to H002D	reserved	-	-	-
H002E	Motor temperature			R
H002F to H0031	reserved	-	-	-
H0032	Power saving effect	-	unsigned	R
H0033	Cumulative saving power	-	unsigned	R
H0034	PID set point	0.1%	unsigned	R/W
H0035	PID measured value	0.1%	unsigned	R/W
H0036	PID deviation	0.1%	unsigned	R/W
H0037 to H0039	reserved	-	-	-
H003A	Option input terminal status 1[*1]	-	-	R
H003B	Option input terminal status 2[*1]	-	-	R
H003C	Option output terminal status[*1]	-	-	R
H003D	Motor thermal load factor	0.1%	unsigned	R

上正科技有限公司
購買、維修 此手冊零組件
電話： 037-466333
Email: service@repairtw.com
Line id: @zzzz
www.repairtw.com

No.	Description	Unit	Type	Read/ write
H003E	Transistor thermal load factor	0.1%	unsigned	R
H003F	reserved	-	-	-
H0040	PTC thermistor resistance	ohm	unsigned	R
H0041	Output power (with regenerative display)			R
H0042	Cumulative regenerative power			R
H0043	PID measured value 2	0.1%	unsigned	R
H0044	Second PID set point	0.1%	unsigned	R/W
H0045	Second PID measured value	0.1%	unsigned	R/W
H0046	Second PID deviation	0.1%	unsigned	R/W
H0047 to H004F	reserved	-	-	-
H0050	Integrated power on time			R
H0051	Running time			R
H0052	Saving energy monitor			R
H0053	reserved	-	-	-
H0054	Fault code (1)	-	-	R
H0055	Fault code (2)	-	-	R
H0056	Fault code (3)	-	-	R
H0057	Fault code (4)	-	-	R
H0058	Fault code (5)	-	-	R
H0059	Fault code (6)	-	-	R
H005A	Fault code (7)	-	-	R
H005B	Fault code (8)	-	-	R
H005C to H005E	reserved	-	-	-
H005F	Second PID measured value 2	0.1%	unsigned	R
H0060	Second PID manipulated variable	0.1%	signed	R
H0061 to H0065	reserved	-	-	-
H0066	PID manipulated variable	0.1%	signed	R
H0067 to H00F8	reserved	-	-	-
H00F9	Run command*2	-	-	R/W
H00FA to H01FF	reserved	-	-	-

上正科技有限公司
購買、維修 此手冊零組件
電話： 037-466333
Email: service@repairtw.com
Line id: @2222
www.repairtw.com

*1 For the details, refer to page 288.

*2 Operation command

This signal is assigned in the initial status. The description changes depending on the setting of **Pr.180 to Pr.189 (Input terminal function selection)**. (Refer to page 355.)

b15															b0
-	-	-	-	RES	STP (STOP)	CS	JOG	MRS	RT	RH	RM	RL	-	-	AU

<32bit data>

No.	Description	Unit	Type	Read/ write
H0200	reserved	-	-	-
H0201	Output frequency (0-15 bit)	0.01 Hz	signed	R
H0202	Output frequency (16-31 bit)			
H0203	Setting frequency (0-15 bit)	0.01 Hz	signed	R
H0204	Setting frequency (16-31 bit)			
H0205	Motor rotation (0-15 bit)	1 r/min	signed	R
H0206	Motor rotation (16-31 bit)			
H0207	Load meter (0-15 bit)	0.1%	signed	R
H0208	Load meter (16-31 bit)			
H0209, H020A	reserved	-	-	-
H020B	Watt-hour meter (1 kWh step) (0-15 bit)	1 kWh	unsigned	R
H020C	Watt-hour meter (1 kWh step) (16-31 bit)			
H020D	Watt-hour meter (0.1/0.01 kWh step) (0-15 bit)	0.1/0.01 kWh	unsigned	R
H020E	Watt-hour meter (0.1/0.01 kWh step) (16-31 bit)			
H020F to H03FF	reserved	-	-	-

◆ Waiting time for the communication line error output after a communication error

Waiting time for the communication error output after a communication line error occurrence can be set.

Pr.	Name	Setting range	Minimum setting increments	Initial value
500	**Communication error execution waiting time**	0 to 999.8 s	0.1s	0s

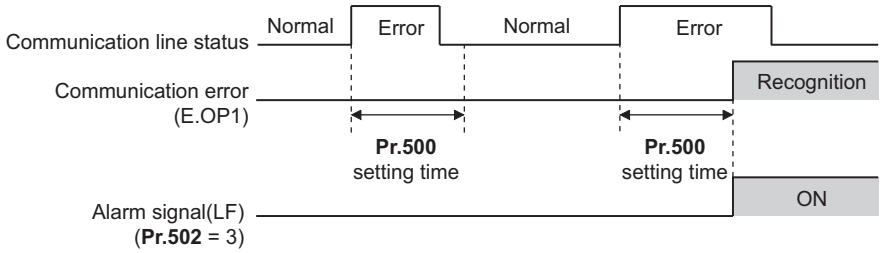

- When a communication line error occurs and lasts longer than the time set in **Pr.500**, it is recognized as a communication error.
- If the communication returns to normal within the time, it is not recognized as a communication error, and the operation continues.

NOTE

- The communication option error (E. 1) is not included in the targets of **Pr.500**.
- Operations at communication error occurrences can be selected with **Pr.502 Stop mode selection at communication error**. (Refer to page 478.)

上正科技有限公司
購買、維修此手冊零組件
電話： 037-466333
Email: service@repairtw.com
Line Id: @zzzz
www.repairtw.com

◆ Displaying and clearing the communication error count

The cumulative count of communication error occurrences can be displayed. Write "0" to clear this cumulative count.

Pr.	Name	Setting range	Minimum setting increments	Initial value
501	**Communication error occurrence count display**	0	1	0

- When a communication line error occurs, the setting of **Pr.501 Communication error occurrence count display** increases by one.
- The cumulative count of communication error occurrences is counted from 0 to 65535. When the count exceeds 65535, the displayed value is cleared and the counting starts over from 0 again.

NOTE

- Communication error count is temporarily stored in the RAM memory. The error count is stored in EEPROM only once per hour. If power reset or inverter reset is performed, **Pr.501** setting will be the one that is last stored to EEPROM depending on the reset timing.

◆ To select the error reset operation at inverter failure

An error reset command from a communication option can be invalidated in the External operation mode or the PU operation mode.

Pr.	Name	Initial value	Setting range	Function
349	**Communication reset selection**	0	0	Error reset is enabled independently of operation mode.
			1	Enables the error reset function only in the Network operation mode.

MEMO

上正科技有限公司
購買、維修 此手冊零組件
電話： 037-466333
Email: service@repairtw.com
Line id: @zzzz
www.repairtw.com

REVISIONS

*The manual number is given on the bottom left of the back cover.

Revision date	*Manual number	Revision
Jul. 2014	IB(NA)-0600547ENG-A	First edition
Aug. 2015	IB(NA)-0600547ENG-B	Addition • Setting values "7, 14, and 17" of **Pr.554 PID signal operation selection** • PID control enhanced functions (**Pr.111**, **Pr.1361** to **Pr.1381**) • **Pr.1018 Monitor with sign selection** • MM-EFS (3000 r/min specification) • Speed detection signal (FB, FB2)
Mar. 2018	IB(NA)-0600547ENG-C	Addition • Start count monitor (**Pr.1410**, **Pr.1411**) • Excitation current low-speed scaling factor (**Pr.14** = "12 to 15", **Pr.85**, **Pr.86**, **Pr.565**, **Pr.566**, **Pr.617**) • Backup/restore function • Input signals (JOGF, JOGR) • Output signal (SAFE) • MODBUS RTU communication stop bit length selection • Continuous operation at communication error (**Pr.502** = "4") • PID manipulated amount: 0 to 100% (**Pr.1015** = "2, 12") • Motor induced voltage constant (**Pr.1412**, **Pr.1413**) • Undervoltage level setting of the 200 V class inverters (**Pr.598**) • User parameter auto storage function (**Pr.675**) • User parameter read source selection (**Pr.414** = "11, 12") • Reset selection (**Pr.75** = "1000 to 1003, 1014 to 1017, 1100 to 1103, 1114 to 1117") • Direct setting selection (**Pr.1000**) • IP55 compatible model • Compatibility with the FR-A8NF and FR-A8NL

上市科技有限公司
購買、維修 此手冊零組件
電話： 037-466333
Email: service@repairtw.com
Line id: @zzzz
www.repairtw.com

FR-A800/F800 Series
Instruction Manual Supplement

1 Safety integrity level (SIL) 3 certification for inverter safety stop function

Mitsubishi Electric FR-A800/F800 series general-purpose inverters have met the SIL 3 requirements of the functional safety international standard IEC 61508: 2010.
For more information, refer to the FR-A800/F800 Safety Stop Function Instruction Manual.
The manual can be downloaded from the Mitsubishi Electric FA Global Website:
www.MitsubishiElectric.com/fa

2 Phase-synchronized bypass switching function (400 V class only)

A new function, phase-synchronized bypass switching, is now available with the plug-in option FR-A8AVP installed on the inverter and the stand-alone phase detection transformer box FR-A8VPB. For more information, refer to the FR-A8AVP Instruction Manual (Phase-Synchronized Bypass Switching Function).

上正科技有限公司
電話： 037-466333
Email: service@repairtw.com
Line id: @zzzz
www.repairtw.com

3 New settings added for communication reset selection

- The setting range has been extended for **Pr.349 Communication reset selection/Ready bit status selection**.

Pr.	Name	Initial value	Setting range	Description
349	**Communication reset selection/Ready bit status selection**	0	0、**100**	Enables the error reset function in any operation mode.
			1、**101**	Enables the error reset function only in the Network operation mode.
N010	**Communication reset selection**	0	0	Enables the error reset function in any operation mode.
			1	Enables the error reset function only in the Network operation mode.
N240	**Ready bit status selection**	0	0	The status of Ready bit in communication data can be changed when an HMS network option is installed.
			1	

Setting			Description			
			Error reset through communication		Ready bit status	
						Main circuit power supply OFF
Pr.349	**N010**	**N240**	**NET operation mode**	**Other than NET operation mode**	**Main circuit power supply ON**	**Control power ON (24 V external power input or a separate power source)**
0	0	0	Enabled	Enabled	ON	ON
1	1	0	Enabled	Disabled	ON	ON
100	0	1	Enabled	Enabled	ON	OFF
101	1	1	Enabled	Disabled	ON	OFF

◆ Ready bit status selection (P.N240)

- The status of Ready bit in communication data can be changed when an HMS network option is installed.

N240 setting	Description
0 (initial value)	The Ready bit is OFF during initialization or failure. Otherwise, the Ready bit is ON.
1	The Ready bit is OFF while the RY signal is OFF, during the 24 V external power supply operation, or while only the control power is ON. Otherwise, the Ready bit is ON.

FR-F800 Series
Instruction Manual Supplement

1 Instructions for compliance with the EU Directives

◆ EMC Directive

The standard is as follows.

- EMC Directive: 2014/30/EC
- Standard: EN 61800-3:2004+A1:2012 (Second environment / PDS Category C3)
  The FR-F806 is compliant with the following standard.
  EN 61800-3:2004+A1:2012 (First environment / PDS Category C2, Second environment / PDS Category C3[*1])
  *1 The applicable standard depends on the type of the built-in EMC filter.

◆ Motor overload protection

To use the electronic thermal function for motor overload protection, set a rated motor current in **Pr.9 Electronic thermal O/L relay**.

Operational characteristic of the electronic thermal relay function

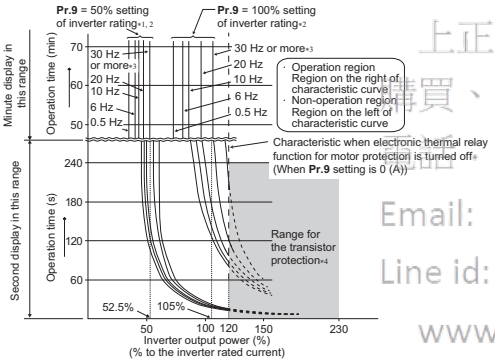

This function detects the overload of the motor, stops the operation of the inverter's output transistor, and stops the output. (The operation characteristic is shown on the left.)

- When using the Mitsubishi Electric constant-torque motor

1. Set **Pr.71** = "1, 13 to 16, 50, 53, or 54". (This provides a 100% continuous torque characteristic in the low-speed range.)

2. Set the rated motor current in **Pr.9**.

*1 When a value 50% of the inverter rated output current (current value) is set in **Pr.9**.

*2 The % value denotes the percentage to the inverter rated output current. It is not the percentage to the rated motor current.

*3 When the electronic thermal relay function dedicated to the Mitsubishi Electric constant-torque motor is set, this characteristic curve applies to operation at 6 Hz or higher.

*4 Transistor protection is activated depending on the temperature of the heatsink. The protection may be activated even with less than 150% depending on the operating conditions.

上正科技有限公司
購買、維修、此手冊零組件
037-466333
Email: service@repairtw.com
Line id: @zzzz
www.repairtw.com

NOTE

- The internal accumulated heat value of the electronic thermal O/L relay is reset to the initial value by the inverter's power reset or reset signal input. Avoid unnecessary reset and power-OFF.
- When multiple motors are driven with a single inverter or when a multi-pole motor or a special motor is driven, install an external thermal relay (OCR) between the inverter and motors. When setting an external thermal relay, note that the current indicated on the motor rating plate is affected by the line-to-line leakage current. (Refer to the Instruction Manual (Detailed).)
- The cooling effect of the motor drops during low-speed operation. Use a thermal protector or a motor with built-in thermistor.
- When the difference between the inverter and motor capacities is large and the set value is small, the protective characteristics of the electronic thermal relay function will be deteriorated. In such case, use an external thermal relay.
- A special motor cannot be protected by the electronic thermal relay function. Use an external thermal relay.
- Motor over temperature sensing is not provided by the electronic thermal O/L relay.
- Electronic thermal memory retention function is not provided by the drive.

2 Negative output selection for monitoring (Pr.290)

Negative output is available for FR Configurator2 or the trace function.

Pr.290 setting	Connection port			
	Terminal AM	Operation panel	Communication option*1	Configurator2 etc.*2
0 (initial value)	—	—	—	—
1	Enabled	—	—	—
2	—	Enabled	—	—
3	Enabled	Enabled	—	—
4	—	—	Enabled	Enabled
5	Enabled	—	Enabled	Enabled
6	—	Enabled	Enabled	Enabled
7	Enabled	Enabled	Enabled	Enabled

—: Disabled (unsigned numbers only)

*1 The following communication does not support the negative output.
RS-485 communication (Mitsubishi inverter protocol, MODBUS RTU, BACnet), LONWORKS communication (FR-A8NL), and SLMP communication

*2 Under the condition that the high-speed sampling and the negative output are selected for FR Configurator2, the display range of the output frequency (Monitor No.1) is -300.00 Hz to 300.00 Hz. A value outside the range is clamped at -300.00 Hz or 300.00 Hz. Under the same condition, the display range of the running speed (Monitor No.6) is -30000 r/min to 30000 r/min. A value outside the range is clamped at -30000 r/min or 30000 r/min. During the trace sampling, the same display ranges are applied. A value outside the ranges is clamped.

- Select items to be displayed with minus signs using **Pr.1018 Monitor with sign selection**.

上正科技有限公司
購買、維修、此手冊零組件
電話：037-466333
Email: service@repairtw.com
Line id: @zzzz
www.repairtw.com

Monitor item	Pr.1018 setting	
	9999	0, 1
Output frequency	—	○*1
Motor speed	—	○*1
Motor torque	○	○
PID deviation	○	○
BACnet Terminal AM output level	○	○
Remote output 1	○	○
Remote output 2	○	○
Remote output 3	○	○
Remote output 4	○	○
PID manipulated amount	○	○
Second PID deviation	○	○
Second PID manipulated amount	○	○
Control circuit temperature	○	○

○: Displayed with minus signs, —: Displayed without minus signs (unsigned numbers only)

*1 Displayed without minus signs on the operation panel. Confirm the rotation direction with the [FWD] or [REV] indicator.

NOTE

- When indication with negative numbers is enabled for the output via terminal AM (analog voltage output), the output is within the range of -10 to +10 VDC. Connect a meter suitable for the output.
- Parameter unit (FR-PU07) displays only unsigned numbers.

3 CS signal command source selection

The CS signal can be used via communication.

◆ Extended setting range of automatic restart after instantaneous power failure selection

- In the Network operation mode, the command source of the CS signal can be selected according to the setting in **Pr.162 Automatic restart after instantaneous power failure selection**.

Pr.	Name	Initial value	Setting range	Description
162 A700	**Automatic restart after instantaneous power failure selection**	0	0 (2)[*1], **1000 (1002)**[*1]	Frequency search only performed at the first start
			1, **1001**	Reduced voltage start only at the first start (no frequency search)
			3, **1003**	Frequency search only performed at the first start (reduced impact restart)
			10, (12)[*1], **1010 (1012)**[*1]	Frequency search at every start
			11, **1011**	Reduced voltage start at every start (no frequency search)
			13, **1013**	Frequency search at every start (reduced impact restart)

*1 The same operation is performed for the both settings.

■ Automatic restart after instantaneous power failure selection (Pr.162)

Pr.162 Setting[*1]	Description	
□□□0	Automatic restart after instantaneous power failure selection[*2]	
□□□1		
□□□2		
□□□3		
□□0□	Restart timing	Restart only at the first start
□□1□		Restart at every start
0□□□	CS signal command source selection under Network operation mode	Always External
1□□□		NET (**Pr.338**=“0”) External (**Pr.338**=“1”)

*1 Zero of the most significant digit is not displayed.

*2 The setting value of **Pr.162** and restart operation under each control method are as follows.

Pr.162 Setting	V/F control, Advanced magnetic flux vector control	PM motor control
□□□0	Frequency search	Frequency search for a PM motor
□□□1	Reduced voltage start	
□□□2	Frequency search	
□□□3	Frequency search (reduced impact restart)	

上正科技有限公司
購買、維修 此手冊零組件
電話： 037-466333
Email: service@repairtw.com
Line id: @zzzz
www.repairtw.com

◆ Command interface/source for start command and frequency command during communication operation

The following table shows a command interface/source in the Network operation mode. A command via communication is enabled in addition to an external terminal to the CS signal (RS-485 terminals or communication option).

Command sources selection			Pr.338 Communication operation command source / Pr.339 Communication speed command source		0: NET			1: External (EXT)			Remarks
					0: NET	1: External (EXT)	2: External (EXT)	0: NET	1: External (EXT)	2: External (EXT)	
Selectable function	Pr.178 to Pr.189 setting	6	CS	Automatic restart after instantaneous power failure / flying start function	External / NET			External			External / NET is selected according to **Pr.162** setting. (The emergency electronic bypass is enabled only when the command source is External.)*1

*1 When **Pr.77** = "2", **Pr.162** setting can be changed during operation. The new setting is applied after stop. Until the inverter has stopped, the previous setting of the interface for the operation command and the speed command in the Network operation mode is valid.

◆ Precautions for electronic bypass sequence function

- The response time of the inverter to the signals depends on the command source, NET or External.
  After the communication with the inverter is established, the motor operation is performed according to the command via NET.
  The commercial power supply operation with the motor is performed when the MRS signal turns ON before the communication is established. It is recommended to turn the MRS signal ON after the communication is established.
  Example: the response time of the inverter to the signals in the Network operation mode (power-ON). The command source is External for the MRS signal and NET for the STF (STR) and CS signals.

上正科技有限公司
購買、維修此產品請洽
電話： 037-466333
Email: service@repairtw.com
Line ID: @zzzz
www.repairtw.com

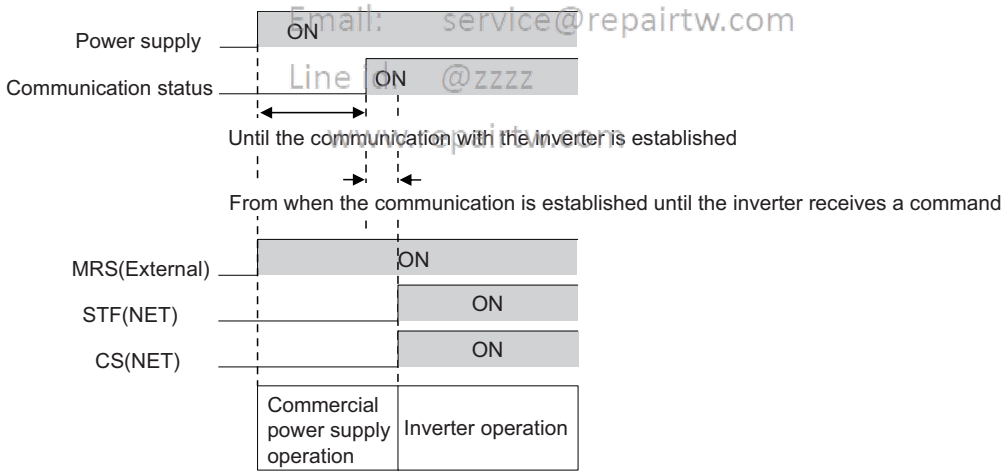

4 Selecting the fast-response operation

Setting **Pr.800** = "109 or 110" selects the fast-response operation. Fast-response operation is available during PM motor control.

Pr.	Name	Initial value	Setting range	Description	
800 G200	Control method selection	20	9	PM motor test operation (Motor is not driven even if it is connected.)	
			20	Normal operation (Motor can be driven.)	
			109	PM motor test operation (Motor is not driven even if it is connected.)	Fast-response operation
			110	Normal operation (Motor can be driven.)	

Control method	Speed response	
	Fast-response operation Pr.800 = "109 or 110"	Normal-response operation Pr.800 = "9 or 20"
PM motor control	130 Hz at maximum	50 Hz at maximum

NOTE

- During fast-response operation, the carrier frequency is always 4 kHz.
- During fast-response operation, E.THT is likely to occur.

5 Ready bit status selection (Pr.349, N240)

上正科技有限公司
購買、維修 此手冊零組件
電話： 037-466333
Email: service@repairtw.com
Line Id: @zzz
www.repairtw.com

- The status of Ready bit in communication data can be selected when a communication option (FR-A8ND, FR-A8NF, or FR-A8NL) is installed.

Setting			Description			
			Communication reset selection		Ready bit status selection	
Pr.349	N010	N240	NET operation mode	Other than NET operation mode	Main circuit: power-ON	Main circuit: power-OFF*1
0	0	0	Reset enabled	Reset enabled	Ready bit: ON	Ready bit: ON
1	1	0	Reset enabled	Reset disabled	Ready bit: ON	Ready bit: ON
100	0	1	Reset enabled	Reset enabled	Ready bit: ON	Ready bit: OFF
101	1	1	Reset enabled	Reset disabled	Ready bit: ON	Ready bit: OFF

*1 When 24 V external power is available for control circuit or power is input only to control circuit.

- FR-A8ND
  Class 0x29 instance 1

Attribute ID	Access	Name	Data type	Number of data bytes	Initial value	Range	Description	
9	Get	Ready	BOOL	1	1	0	Other than the below	
						1	**Pr.349** = "0 or 1" **N240** = "0"	During stop / during acceleration / during constant speed operation / during deceleration / during reverse rotation deceleration
							Pr.349 = "100 or 101" **N240** = "1"	During stop while the RY signal is ON / during acceleration / during constant speed operation / during deceleration / during reverse rotation deceleration

- FR-A8NF
  Inverter status monitor

Bit	Name	Description		
14	READY signal	Reset cancel	**Pr.349** = "0 or 1" **N240** = "0"	0: During an inverter reset / during startup after power-ON 1: During normal operation
			Pr.349 = "100 or 101" **N240** = "1"	0: RY signal is OFF 1: RT signal is ON

- FR-A8NL

  Inverter output signal (network output SNVT_state nvoInvOutputSig)

Bit	Signal name	Description	
15	READY signal	**Pr.349** = "0 or 1" **N240** = "0"	The value in the bit turns 1 when the inverter is ready for operation after power-ON.*1
		Pr.349 = "100 or 101" **N240** = "1"	The value in the bit turns 1 when the RY signal turns ON.

*1 The value in the bit turns 1 when power is supplied to the control circuit only.

上正科技有限公司
購買、維修 此手冊零組件
電話： 037-466333
Email: service@repairtw.com
Line id: @zzzz
www.repairtw.com

上正
購買、
電話：
Email:
Line id:
www

MITSUBISHI ELECTRIC CORPORATION
HEAD OFFICE: TOKYO BUILDING 2-7-3, MARUNOUCHI, CHIYODA-KU, TOKYO 100-8310, JAPAN

IB(NA)-0600547ENG-C(1803)MEE Printed in Japan

Specifications subject to change without notice.