MITSUBISHI ELECTRIC

700 series

INVERTER
FR-D700
INSTRUCTION MANUAL

FR-D720-008 to 318 - NA
FR-D740-012 to 160 - NA
FR-D720S-008 to 100 - NA

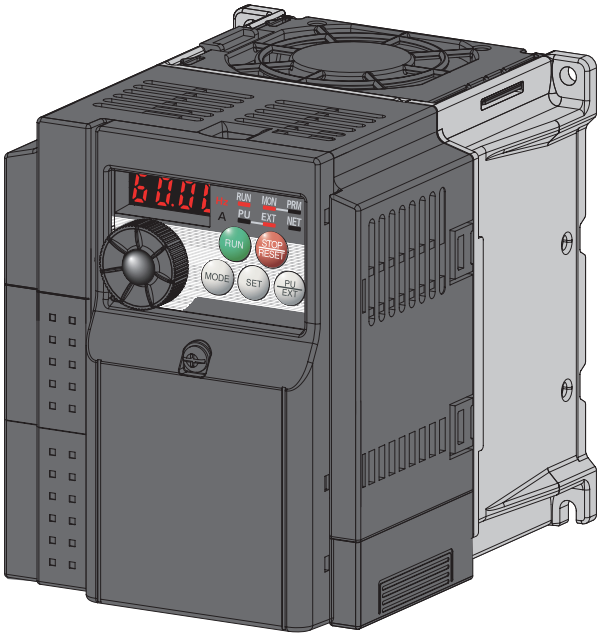

OUTLINE 1

WIRING 2

PRECAUTIONS FOR USE OF THE INVERTER 3

PARAMETERS 4

TROUBLESHOOTING 5

PRECAUTIONS FOR MAINTENANCE AND INSPECTION 6

SPECIFICATIONS 7

Thank you for choosing this Mitsubishi Inverter.
This Instruction Manual provides instructions for advanced use of the FR-D700 series inverters.
Incorrect handling might cause an unexpected fault. Before using the inverter, always read this instruction manual and the Installation Guideline [IB-0600367ENG] packed with the product carefully to use the equipment to its optimum performance.

This section is specifically about safety matters

Do not attempt to install, operate, maintain or inspect the inverter until you have read through the Instruction Manual and appended documents carefully and can use the equipment correctly. Do not use this product until you have a full knowledge of the equipment, safety information and instructions.
In this Instruction Manual, the safety instruction levels are classified into "WARNING" and "CAUTION".

⚠WARNING	Assumes that incorrect handling may cause hazardous conditions, resulting in death or severe injury.
⚠CAUTION	Assumes that incorrect handling may cause hazardous conditions, resulting in medium or slight injury, or may cause physical damage only.

Note that even the ⚠CAUTION level may lead to a serious consequence according to conditions. Please follow the instructions of both levels because they are important to personnel safety.

上正科技有限公司
購買、維修 此手冊電子件
電話： 037-466335
Email: service@repairtw.com
Line id: @zzzz
www.repairtw.com

1. Electric Shock Prevention

⚠WARNING

- **While power is on or when the inverter is running, do not open the front cover. Otherwise you may get an electric shock.**
- **Do not run the inverter with the front cover or wiring cover removed. Otherwise, you may access the exposed high-voltage terminals or the charging part of the circuitry and get an electric shock.**
- **Even if power is off, do not remove the front cover except for wiring or periodic inspection. You may access the charged inverter circuits and get an electric shock.**
- **Before starting wiring or inspection, switch off power, check to make sure that the operation panel indicator is off, wait for at least 10 minutes after the power supply has been switched off, and check that there are no residual voltage using a tester or the like. The capacitor is charged with high voltage for some time after power off and it is dangerous.**
- **This inverter must be earthed (grounded). Earthing (grounding) must conform to the requirements of national and local safety regulations and electrical code. (NEC section 250, IEC 536 class 1 and other applicable standards)**
  Use an neutral-point earthed (grounded) power supply for 400V class inverter in compliance with EN standard.
- **Any person who is involved in the wiring or inspection of this equipment should be fully competent to do the work.**
- **Always install the inverter before wiring. Otherwise, you may get an electric shock or be injured.**
- **Perform setting dial and key operations with dry hands to prevent an electric shock. Otherwise you may get an electric shock.**
- **Do not subject the cables to scratches, excessive stress, heavy loads or pinching. Otherwise, you may get an electric shock.**
- **Do not change the cooling fan while power is on. It is dangerous to change the cooling fan while power is on.**
- **Do not touch the printed circuit board with wet hands. Otherwise, you may get an electric shock.**
- **When measuring the main circuit capacitor capacity, the DC voltage is applied to the motor for 1s at powering off. Never touch the motor terminal, etc. right after powering off to prevent an electric shock.**

2. Fire Prevention

⚠CAUTION

- **Install the inverter on a nonflammable wall without holes (so that nobody can touch the inverter heatsink on the rear side, etc.). Mounting it to or near flammable material can cause a fire.**
- **If the inverter has become faulty, switch off the inverter power. A continuous flow of large current could cause a fire.**
- **When using a brake resistor, make up a sequence that will turn off power when an alarm signal is output. Otherwise, the brake resistor may excessively overheat due to damage of the brake transistor and such, causing a fire.**
- **Do not connect a resistor directly to the DC terminals P/+ and N/-. This could cause a fire.**

3.Injury Prevention

⚠CAUTION

- Apply only the voltage specified in the instruction manual to each terminal. Otherwise, burst, damage, etc. may occur.
- Ensure that the cables are connected to the correct terminals. Otherwise, burst, damage, etc. may occur.
- Always make sure that polarity is correct to prevent damage, etc. Otherwise, burst, damage, etc. may occur.
- While power is on or for some time after power-off, do not touch the inverter as they will be extremely hot. Doing so can cause burns.

4. Additional Instructions

Also note the following points to prevent an accidental failure, injury, electric shock, etc.

(1) Transportation and mounting

⚠CAUTION

- Transport the product using the correct method that corresponds to the weight. Failure to observe this could lead to injuries.
- Do not stack the inverter boxes higher than the number recommended.
- Ensure that installation position and material can withstand the weight of the inverter. Install according to the information in the instruction manual.
- Do not install or operate the inverter if it is damaged or has parts missing.
- When carrying the inverter, do not hold it by the front cover or setting dial; it may fall off or fail.
- Do not stand or rest heavy objects on the product.
- Check the inverter mounting orientation is correct.
- Prevent other conductive bodies such as screws and metal fragments or other flammable substance such as oil from entering the inverter.
- As the inverter is a precision instrument, do not drop or subject it to impact.
- Use the inverter under the following environmental conditions: Otherwise, the inverter may be damaged.

Environment	Surrounding air temperature	-10°C to +50°C (14°F to 122°F) (non-freezing)
	Ambient humidity	90%RH maximum (non-condensing)
	Storage temperature	-20°C to +65°C (-4°F to 149°F) *1
	Atmosphere	Indoors (free from corrosive gas, flammable gas, oil mist, dust and dirt)
	Altitude/ vibration	Maximum 1000m (3280.80feet) above sea level for standard operation. After that derate by 3% for every extra 500m (1640.40feet) up to 2500m (8202feet) (91%). 5.9m/s^2 or less

*1 Temperature applicable for a short time, e.g. in transit.

(2) Wiring

⚠CAUTION

- Do not install a power factor correction capacitor or surge suppressor/capacitor type filter on the inverter output side. These devices on the inverter output side may be overheated or burn out.
- The connection orientation of the output cables U, V, W to the motor will affect the direction of rotation of the motor.

(3) Trial run

⚠CAUTION

- Before starting operation, confirm and adjust the parameters. A failure to do so may cause some machines to make unexpected motions.

(4) Usage

⚠WARNING

- When you have chosen the retry function, stay away from the equipment as it will restart suddenly after trip.
- Since pressing STOP RESET key may not stop output depending on the function setting status, provide a circuit and switch separately to make an emergency stop (power off, mechanical brake operation for emergency stop, etc).
- Make sure that the start signal is off before resetting the inverter alarm. A failure to do so may restart the motor suddenly.
- The load used should be a three-phase induction motor only. Connection of any other electrical equipment to the inverter output may damage the equipment.
- Do not modify the equipment.
- Do not perform parts removal which is not instructed in this manual. Doing so may lead to fault or damage of the product.

⚠CAUTION

- The electronic thermal relay function does not guarantee protection of the motor from overheating. It is recommended to install both an external thermal and PTC thermistor for overheat protection.
- Do not use a magnetic contactor on the inverter input for frequent starting/stopping of the inverter. Otherwise, the life of the inverter decreases.
- Use a noise filter to reduce the effect of electromagnetic interference. Otherwise nearby electronic equipment may be affected.
- Take measures to suppress harmonics. Otherwise power supply harmonics from the inverter may heat/damage the power factor correction capacitor and generator.
- When a 400V class motor is inverter-driven, please use an insulation-enhanced motor or measures taken to suppress surge voltages. Surge voltages attributable to the wiring constants may occur at the motor terminals, deteriorating the insulation of the motor.
- When parameter clear or all parameter clear is performed, reset the required parameters before starting operations. Each parameter returns to the initial value.
- The inverter can be easily set for high-speed operation. Before changing its setting, fully examine the performances of the motor and machine.
- In addition to the inverter's holding function, install a holding device to ensure safety.
- Before running an inverter which had been stored for a long period, always perform inspection and test operation.
- For prevention of damage due to static electricity, touch nearby metal before touching this product to eliminate static electricity from your body.

上正科技有限公司
購買、維修 此手冊零部件
電話： 037-466333
Email: service@repairtw.com
www.repairtw.com

(5) Emergency stop

⚠CAUTION

- **Provide a safety backup such as an emergency brake which will prevent the machine and equipment from hazardous conditions if the inverter fails.**
- **When the breaker on the inverter input side trips, check for the wiring fault (short circuit), damage to internal parts of the inverter, etc. Identify the cause of the trip, then remove the cause and power on the breaker.**
- **When any protective function is activated, take the appropriate corrective action, then reset the inverter, and resume operation.**

(6) Maintenance, inspection and parts replacement

⚠CAUTION

- **Do not carry out a megger (insulation resistance) test on the control circuit of the inverter. It will cause a failure.**

(7) Disposal

⚠CAUTION

- **Treat as industrial waste.**

General instruction

Many of the diagrams and drawings in this Instruction Manual show the inverter without a cover, or partially open. Never operate the inverter in this manner. Always replace the cover and follow this Instruction Manual when operating the inverter.

上正科技有限公司
購買、維修 此手冊零組件
電話： 037-466333
Email: service@repairtw.com
Line id: @zzzz
www.repairtw.com

CONTENTS

1 OUTLINE 1

1.1 Product checking and parts identification 2

1.2 Inverter and peripheral devices 3

1.2.1 Peripheral devices 4

1.3 Removal and reinstallation of the cover 5

1.3.1 Front cover 5

1.3.2 Wiring cover 7

1.4 Installation of the inverter and enclosure design 8

1.4.1 Inverter installation environment 8

1.4.2 Cooling system types for inverter enclosure 10

1.4.3 Inverter placement 11

2 WIRING 13

2.1 Wiring 14

2.1.1 Terminal connection diagram 14

2.2 Main circuit terminal specifications 15

2.2.1 Specification of main circuit terminal 15

2.2.2 Terminal arrangement of the main circuit terminal, power supply and the motor wiring 15

2.2.3 Cables and wiring length 17

2.3 Control circuit specifications 20

2.3.1 Control circuit terminal 20

2.3.2 Changing the control logic 22

2.3.3 Wiring of control circuit 24

2.3.4 Wiring instructions 28

2.3.5 Connection to the PU connector 29

2.4 Connection of stand-alone option unit 31

2.4.1 Connection of a dedicated external brake resistor (MRS type, MYS type, FR-ABR) (FR-D720-025 or more, FR-D740-012 or more, FR-D720S-025 or more) 31

2.4.2 Connection of the brake unit (FR-BU2) 33

2.4.3 Connection of the high power factor converter (FR-HC) 34

2.4.4 Connection of the power regeneration common converter (FR-CV) 35

2.4.5 Connection of a DC reactor (FR-HEL) 35

3 PRECAUTIONS FOR USE OF THE INVERTER 37

3.1 EMC and leakage currents 38

上正科技有限公司
購買、維修 此手冊零組件
電話： 037-466333
Email: service@repairtw.com
Line Id: @2222
www.repairtw.com

3.1.1 Leakage currents and countermeasures 38
3.1.2 EMC measures 40
3.1.3 Power supply harmonics 42

3.2 Installation of power factor improving reactor 43

3.3 Power-off and magnetic contactor (MC) 44

3.4 Inverter-driven 400V class motor 45

3.5 Precautions for use of the inverter 46

3.6 Failsafe of the system which uses the inverter 48

4 PARAMETERS 51

4.1 Operation panel 52

4.1.1 Names and functions of the operation panel 52
4.1.2 Basic operation (factory setting) 53
4.1.3 Easy operation mode setting (easy setting mode) 54
4.1.4 Change the parameter setting value 55
4.1.5 Setting dial push 55

4.2 Parameter list 56

4.2.1 Parameter list 56

4.3 Adjust the output torque (current) of the motor 73

4.3.1 Manual torque boost (Pr. 0, Pr. 46) 73
4.3.2 Large starting torque and low speed torque are necessary (General-purpose magnetic flux vector control (Pr. 71, Pr. 80)) 75
4.3.3 Slip compensation (Pr. 245 to Pr. 247) 78
4.3.4 Stall prevention operation (Pr. 22, Pr. 23, Pr. 48, Pr. 66, Pr. 156, Pr. 157) 79

4.4 Limit the output frequency 83

4.4.1 Maximum/minimum frequency (Pr. 1, Pr. 2, Pr. 18) 83
4.4.2 Avoid mechanical resonance points (frequency jumps) (Pr. 31 to Pr. 36) 84

4.5 Set V/F pattern 85

4.5.1 Base frequency, voltage (Pr. 3, Pr. 19, Pr. 47) 85
4.5.2 Load pattern selection (Pr. 14) 87

4.6 Frequency setting by external terminals 89

4.6.1 Operation by multi-speed operation (Pr. 4 to Pr. 6, Pr. 24 to Pr. 27, Pr. 232 to Pr. 239) 89
4.6.2 Jog operation (Pr. 15, Pr. 16) 91
4.6.3 Remote setting function (Pr. 59) 93

4.7 Setting of acceleration/deceleration time and acceleration/deceleration pattern 96

上正科技有限公司
購買、維修、此手冊零組件
電話： 037-466333
Email: service@repairtw.com
Line Id: @zzzz
www.repairtw.com

4.7.1 Setting of the acceleration and deceleration time (Pr. 7, Pr. 8, Pr. 20, Pr. 44, Pr. 45) 96
4.7.2 Starting frequency and start-time hold function (Pr. 13, Pr. 571) 98
4.7.3 Acceleration/deceleration pattern (Pr. 29) 99

4.8 Selection and protection of a motor 100

4.8.1 Motor overheat protection (Electronic thermal O/L relay, PTC thermistor protection) (Pr. 9, Pr. 51, Pr. 561) 100
4.8.2 Applied motor (Pr. 71, Pr. 450) 103
4.8.3 To exhibit the best performance of the motor (offline auto tuning) (Pr. 71, Pr. 80, Pr. 82 to Pr. 84, Pr. 90, Pr. 96) 105

4.9 Motor brake and stop operation 109

4.9.1 DC injection brake (Pr. 10 to Pr. 12) 109
4.9.2 Selection of a regenerative brake (Pr. 30, Pr. 70) 110
4.9.3 Stop selection (Pr. 250) 112

4.10 Function assignment of external terminal and control 113

4.10.1 Input terminal function selection (Pr. 178 to Pr. 182) 113
4.10.2 Inverter output shutoff signal (MRS signal, Pr. 17) 115
4.10.3 Condition selection of function validity by second function selection signal (RT) 116
4.10.4 Start signal operation selection (STF, STR, STOP signal, Pr. 250) 117
4.10.5 Output terminal function selection (Pr. 190, Pr. 192) 119
4.10.6 Detection of output frequency (SU, FU signal, Pr. 41 to Pr. 43) 123
4.10.7 Output current detection function (Y12 signal, Y13 signal, Pr. 150 to Pr. 153, Pr. 166, Pr. 167) 124
4.10.8 Remote output selection (REM signal, Pr. 495, Pr. 496) 126

4.11 Monitor display and monitor output signal 127

4.11.1 Speed display and speed setting (Pr. 37) 127
4.11.2 Monitor display selection of operation panel/PU and terminal AM (Pr. 52, Pr.158, Pr. 170, Pr. 171, Pr. 268, Pr. 563, Pr. 564, Pr. 891) 128
4.11.3 Reference of the terminal AM (analog voltage output) (Pr. 55, Pr. 56) 133
4.11.4 Terminal AM calibration (calibration parameter C1 (Pr.901)) 134

4.12 Operation selection at power failure and instantaneous power failure 136

4.12.1 Automatic restart after instantaneous power failure/flying start (Pr. 30, Pr. 57, Pr. 58, Pr. 96, Pr. 162, Pr. 165, Pr. 298, Pr. 299, Pr. 611) 136
4.12.2 Power-failure deceleration stop function (Pr. 261) 142

4.13 Operation setting at fault occurrence 144

4.13.1 Retry function (Pr. 65, Pr. 67 to Pr. 69) 144
4.13.2 Input/output phase loss protection selection (Pr. 251, Pr. 872) 146
4.13.3 Earth (ground) fault detection at start (Pr. 249) 146

4.14 Energy saving operation 147

上正科技有限公司
購買、維修 此手冊零組件
電話： 037-466333
Email: service@repairtw.com
Line id: @ozz
www.repairtw.com

4.14.1 Optimum excitation control (Pr. 60) 147

4.15 Motor noise, EMI measures, mechanical resonance 148

4.15.1 PWM carrier frequency and Soft-PWM control (Pr. 72, Pr. 240, Pr. 260) 148
4.15.2 Speed smoothing control (Pr. 653) 149

4.16 Frequency setting by analog input (terminal 2, 4) 150

4.16.1 Analog input selection (Pr. 73, Pr. 267) 150
4.16.2 Response level of analog input and noise elimination (Pr. 74) 152
4.16.3 Bias and gain of frequency setting voltage (current) (Pr. 125, Pr. 126, Pr. 241, C2 (Pr. 902) to C7 (Pr. 905)) 153

4.17 Misoperation prevention and parameter setting restriction 158

4.17.1 Reset selection/disconnected PU detection/PU stop selection (Pr. 75) 158
4.17.2 Parameter write disable selection (Pr. 77) 161
4.17.3 Reverse rotation prevention selection (Pr. 78) 162
4.17.4 Extended parameter display (Pr. 160) 162
4.17.5 Password function (Pr. 296, Pr. 297) 163

4.18 Selection of operation mode and operation location 165

4.18.1 Operation mode selection (Pr. 79) 165
4.18.2 Operation mode at power-on (Pr. 79, Pr. 340) 175
4.18.3 Start command source and frequency command source during communication operation (Pr. 338, Pr. 339, Pr. 551) 176

4.19 Communication operation and setting 180

4.19.1 Wiring and configuration of PU connector 180
4.19.2 Initial settings and specifications of RS-485 communication (Pr. 117 to Pr. 120, Pr. 123, Pr. 124, Pr. 549) 183
4.19.3 Operation selection at communication error occurrence (Pr. 121, Pr. 122, Pr. 502) 184
4.19.4 Communication EEPROM write selection (Pr. 342) 187
4.19.5 Mitsubishi inverter protocol (computer link communication) 188
4.19.6 Modbus RTU communication specifications (Pr. 117, Pr. 118, Pr. 120, Pr. 122, Pr. 343, Pr. 502, Pr. 549) 200

4.20 Special operation and frequency control 212

4.20.1 PID control (Pr. 127 to Pr. 134, Pr. 575 to Pr. 577) 212
4.20.2 Dancer control (Pr. 44, Pr. 45, Pr. 128 to Pr. 134) 220
4.20.3 Regeneration avoidance function (Pr. 665, Pr. 882, Pr. 883, Pr. 885, Pr. 886) 226

4.21 Useful functions 228

4.21.1 Cooling fan operation selection (Pr. 244) 228
4.21.2 Display of the life of the inverter parts (Pr. 255 to Pr. 259) 229
4.21.3 Maintenance timer alarm (Pr. 503, Pr. 504) 233
4.21.4 Current average value monitor signal (Pr. 555 to Pr. 557) 234
4.21.5 Free parameter (Pr. 888, Pr. 889) 236

中正工作技有限公司
補貨、維修、配件、零組件
Tel: 886-2-2917 488333
Email: service@repairtw.com
Line ID: @2221
www.repairtw.com

4.22 Setting the parameter unit and operation panel 237

4.22.1 RUN key rotation direction selection (Pr. 40) 237
4.22.2 PU display language selection(Pr.145) 237
4.22.3 Operation panel frequency setting/key lock operation selection (Pr. 161) 238
4.22.4 Magnitude of frequency change setting (Pr. 295) 240
4.22.5 Buzzer control (Pr. 990) 241
4.22.6 PU contrast adjustment (Pr. 991) 241

4.23 Parameter clear/ All parameter clear 242

4.24 Initial value change list 243

4.25 Check and clear of the faults history 244

5 TROUBLESHOOTING 247

5.1 Reset method of protective function 248

5.2 List of fault or alarm indications 249

5.3 Causes and corrective actions 250

5.4 Correspondences between digital and actual characters 259

5.5 Check first when you have some troubles 260

5.5.1 Motor will not start 260
5.5.2 Motor generates abnormal noise 260
5.5.3 Motor generates heat abnormally 261
5.5.4 Motor rotates in opposite direction 261
5.5.5 Speed greatly differs from the setting 261
5.5.6 Acceleration/deceleration is not smooth 261
5.5.7 Motor current is large 261
5.5.8 Speed does not increase 261
5.5.9 Speed varies during operation 262
5.5.10 Operation mode is not changed properly 262
5.5.11 Operation panel display is not operating 262
5.5.12 Parameter write cannot be performed 262

6 PRECAUTIONS FOR MAINTENANCE AND INSPECTION 263

6.1 Inspection items 264

6.1.1 Daily inspection 264
6.1.2 Periodic inspection 264
6.1.3 Daily and periodic inspection 265
6.1.4 Display of the life of the inverter parts 266
6.1.5 Checking the inverter and converter modules 266

上正科技有限公司
購買、維修 此手冊零組件
電話： 037-466333
Email: service@repairtw.com
Line id: @2222
www.repairtw.com

6.1.6 Cleaning 266
6.1.7 Replacement of parts 267

6.2 Measurement of main circuit voltages, currents and powers 271

6.2.1 Measurement of powers 273
6.2.2 Measurement of voltages and use of PT 273
6.2.3 Measurement of currents 274
6.2.4 Use of CT and transducer 274
6.2.5 Measurement of inverter input power factor 274
6.2.6 Measurement of converter output voltage (across terminals P and N) 274
6.2.7 Insulation resistance test using megger 275
6.2.8 Pressure test 275

7 SPECIFICATIONS 277

7.1 Rating 278

7.2 Common specifications 280

7.3 Outline dimension drawings 281

APPENDIX 285

Appendix1 Index 286

上正科技有限公司
購買、維修 此手冊零組件
電話： 037-466333
Email: service@repairtw.com
Line id: @zzzz
www.repairtw.com

MEMO

上正科技有限公司
購買、維修 此手冊零組件
電話： 037-466333
Email: service@repairtw.com
Line id: @zzzz
www.repairtw.com

1 OUTLINE

This chapter explains the "OUTLINE" for use of this product. Always read the instructions before using the equipment

1.1 Product checking and parts identification 2
1.2 Inverter and peripheral devices 3
1.3 Removal and reinstallation of the cover 5
1.4 Installation of the inverter and enclosure design 8

上正科技有限公司
購買、維修 此手冊零組件
電話： 037-466333
Email: service@repairtw.com
Line id: @zzz
www.repairtw.com

<Abbreviations>

PU	Operation panel and parameter unit (FR-PU04/FR-PU07)
Inverter	Mitsubishi inverter FR-D700 series
FR-D700	Mitsubishi inverter FR-D700 series
Pr.	Parameter number
PU operation	Operation using the PU (operation panel/FR-PU04/FR-PU07)
External operation	Operation using the control circuit signals
Combined operation	Operation using both the PU (operation panel/FR-PU04/FR-PU07) and external operation
Operation panel for E500, PA02	FR-E500 series operation panel (FR-PA02-02)
Mitsubishi standard motor	SF-JR
Mitsubishi constant-torque motor	SF-HRCA

<Trademarks>

- Microsoft and Visual C++ are registered trademarks of Microsoft Corporation in the United States and/or other countries.
- Company and product names herein are the trademarks and registered trademarks of their respective owners.

<Mark>

REMARKS :Additional helpful contents and relations with other functions are stated

NOTE :Contents requiring caution or cases when set functions are not activated are stated.

POINT :Useful contents and points are stated.

Parameters referred to : related parameters are stated.

1.1 Product checking and parts identification

Unpack the inverter and check the capacity plate on the front cover and the rating plate on the inverter side face to ensure that the product agrees with your order and the inverter is intact.

●Inverter type

FR - D740 - 036 - NA

Symbol	Voltage class
D720	Three-phase 200V class
D740	Three-phase 400V class
D720S	Single-phase 200V class

Displays the rated current

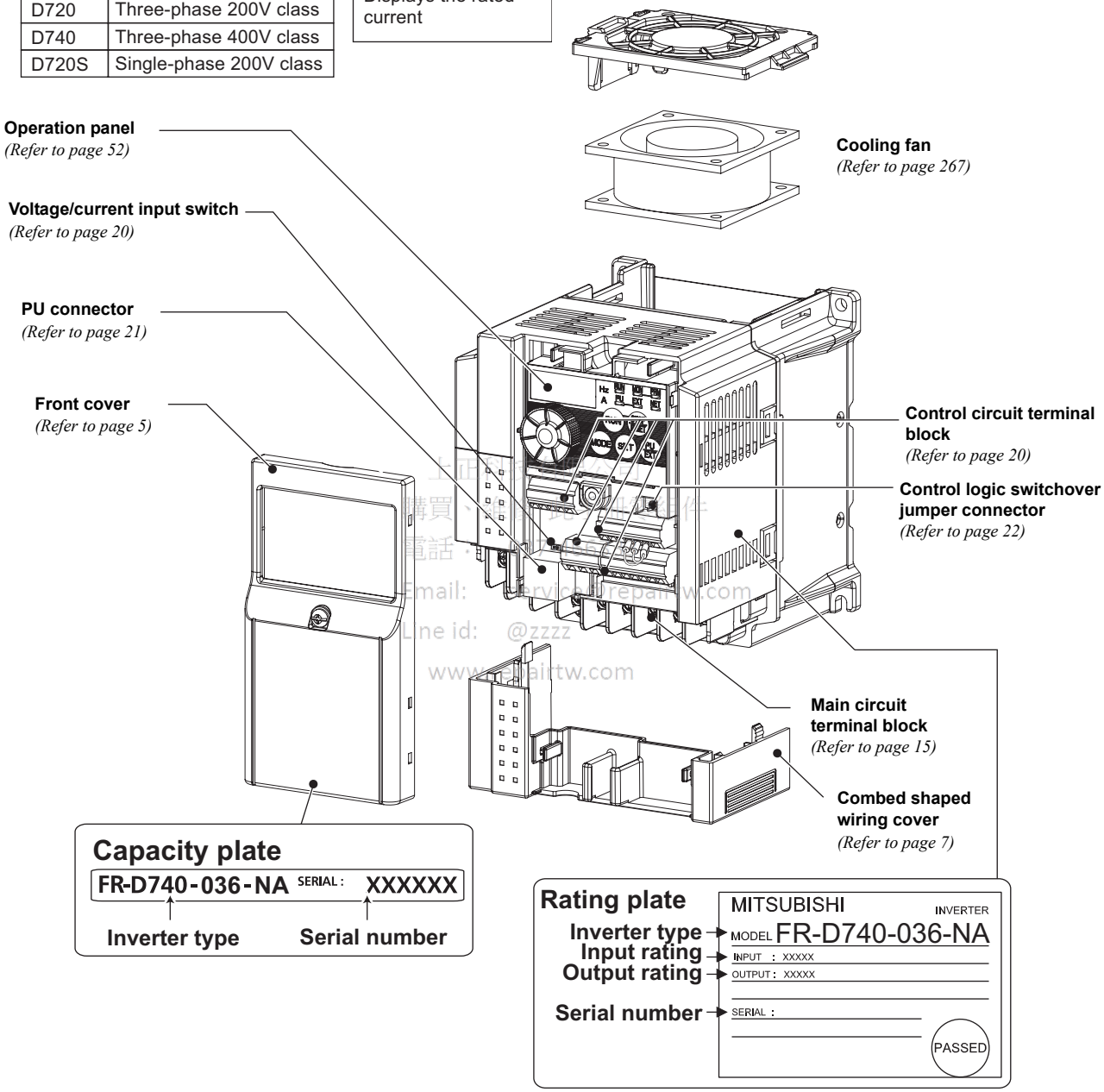

- **Accessory**
  - **Fan cover fixing screws (M3 × 35mm)**
    These screws are necessary for compliance with the European Directive (*Refer to Installation Guideline*)

Type	Number
FR-D720-070 to 165 FR-D740-036 to 080 FR-D720S-070, 100	1
FR-D720-120, 160 FR-D740-120, 160	2

1.2 Inverter and peripheral devices

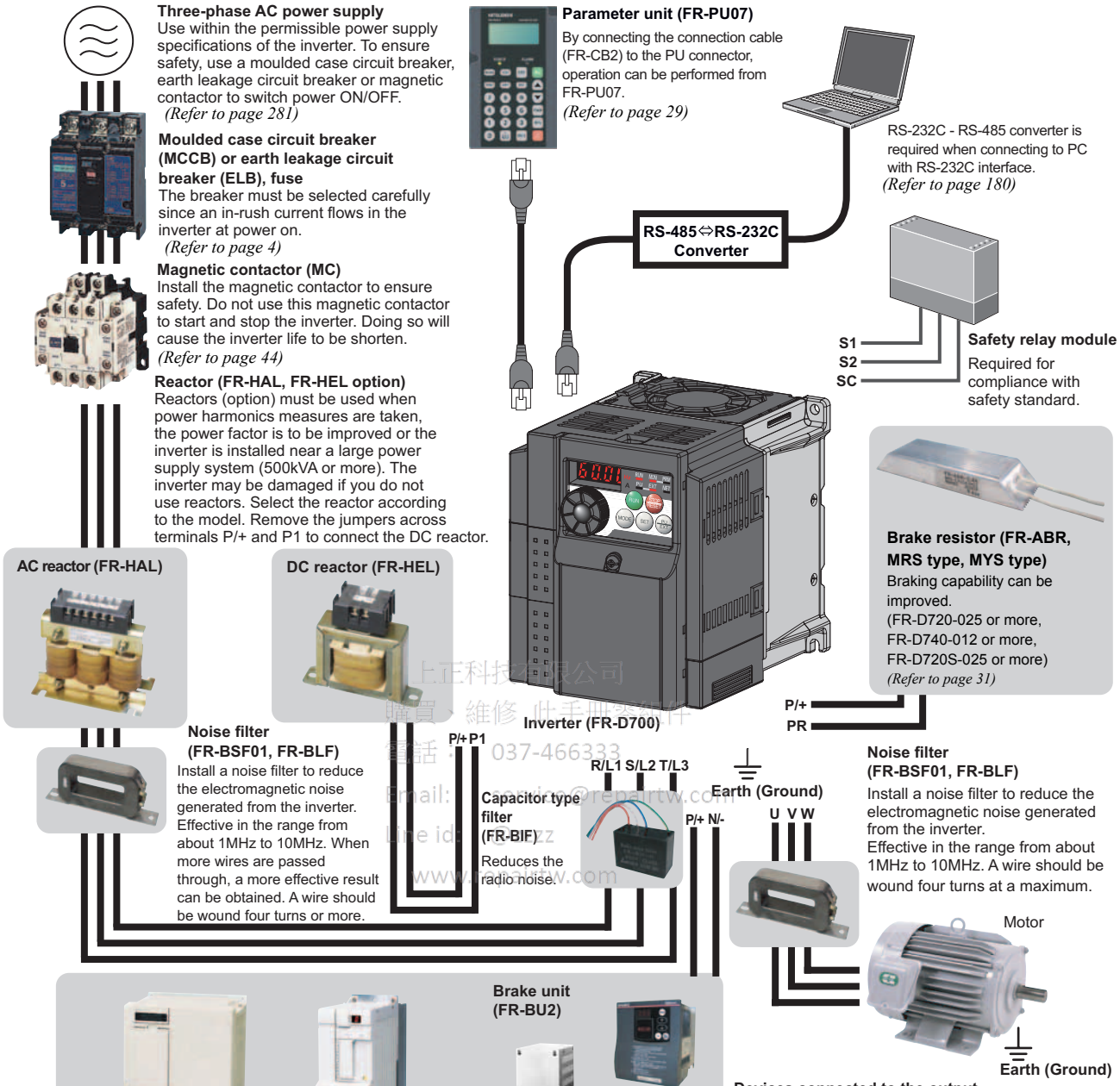

上正科技有限公司
購買、維修、供手機零件
電話：037-466333
Email: service@repartw.com
Line id: @repartz
www.repartw.com

NOTE

- **The life of the inverter is influenced by surrounding air temperature. The surrounding air temperature should be as low as possible within the permissible range. This must be noted especially when the inverter is installed in an enclosure.** *(Refer to page 8)*
- **Wrong wiring might lead to damage of the inverter. The control signal lines must be kept fully away from the main circuit to protect them from noise.** *(Refer to page 14)*
- **Do not install a power factor correction capacitor, surge suppressor or capacitor type filter on the inverter output side. This will cause the inverter to trip or the capacitor and surge suppressor to be damaged. If any of the above devices are connected, immediately remove them.**
- **Electromagnetic wave interference**
  The input/output (main circuit) of the inverter includes high frequency components, which may interfere with the communication devices (such as AM radios) used near the inverter. In this case, install the FR-BIF optional capacitor type filter (for use in the input side only) or FR-BSF01 or FR-BLF common mode filter to minimize interference. *(Refer to page 40).*
- **Refer to the instruction manual of each option and peripheral devices for details of peripheral devices.**

1.2.1 Peripheral devices

Check the inverter type of the inverter you purchased. Appropriate peripheral devices must be selected according to the capacity.
Refer to the following list and prepare appropriate peripheral devices:

Inverter Type		Motor Output (kW (HP))	Moulded Case Circuit Breaker (MCCB) *1 or Earth Leakage Circuit Breaker (ELB) *2		Magnetic Contactor (MC) *3	
			Reactor connection		Reactor connection	
			without	with	without	with
Three-Phase 200V	FR-D720-008	0.1 (1/8)	30AF 5A	30AF 5A	S-N10	S-N10
	FR-D720-014	0.2 (1/4)	30AF 5A	30AF 5A	S-N10	S-N10
	FR-D720-025	0.4 (1/2)	30AF 5A	30AF 5A	S-N10	S-N10
	FR-D720-042	0.75 (1)	30AF 10A	30AF 5A	S-N10	S-N10
	FR-D720-070	1.5 (2)	30AF 15A	30AF 10A	S-N10	S-N10
	FR-D720-100	2.2 (3)	30AF 20A	30AF 15A	S-N10	S-N10
	FR-D720-165	3.7 (5)	30AF 30A	30AF 30A	S-N20, S-N21	S-N10
	FR-D720-238	5.5 (7.5)	50AF 50A	50AF 40A	S-N20, S-N21	S-N20, S-N21
	FR-D720-318	7.5 (10)	100AF 60A	50AF 50A	S-N25	S-N20, S-N21
Three-Phase 400V	FR-D740-012	0.4 (1/2)	30AF 5A	30AF 5A	S-N10	S-N10
	FR-D740-022	0.75 (1)	30AF 5A	30AF 5A	S-N10	S-N10
	FR-D740-036	1.5 (2)	30AF 10A	30AF 10A	S-N10	S-N10
	FR-D740-050	2.2 (3)	30AF 15A	30AF 10A	S-N10	S-N10
	FR-D740-080	3.7 (5)	30AF 20A	30AF 15A	S-N10	S-N10
	FR-D740-120	5.5 (7.5)	30AF 30A	30AF 20A	S-N20	S-N11, S-N12
	FR-D740-160	7.5 (10)	30AF 30A	30AF 30A	S-N20	S-N20
Single-Phase 200V	FR-D720S-008	0.1 (1/8)	30AF 5A	30AF 5A	S-N10	S-N10
	FR-D720S-014	0.2 (1/4)	30AF 5A	30AF 5A	S-N10	S-N10
	FR-D720S-025	0.4 (1/2)	30AF 10A	30AF 5A	S-N10	S-N10
	FR-D720S-042	0.75 (1)	30AF 15A	30AF 10A	S-N10	S-N10
	FR-D720S-070	1.5 (2)	30AF 30A	30AF 15A	S-N10	S-N10
	FR-D720S-100	2.2 (3)	30AF 40A	30AF 30A	S-N20, S-N21	S-N10

上海科技有限公司
購買 維修 此手冊零售代
電話 037-466333
Email service@repairtw.com
Line @zzzz
www.repairtw.com

*1 •Select an MCCB according to the power supply capacity.
•Install one MCCB per inverter.

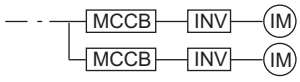

*2 For installations in the United States or Canada, use the class T type fuse certified by the UL and cUL.

*3 Magnetic contactor is selected based on the AC-1 class. The electrical durability of magnetic contactor is 500,000 times. When the magnetic contactor is used for emergency stop during motor driving, the electrical durability is 25 times.
When using the MC for emergency stop during motor driving or using on the motor side during commercial-power supply operation, select the MC with class AC-3 rated current for the motor rated current.

NOTE

- **When the inverter capacity is larger than the motor capacity, select an MCCB and a magnetic contactor according to the inverter type and cable and reactor according to the motor output.**
- **When the breaker on the inverter primary side trips, check for the wiring fault (short circuit), damage to internal parts of the inverter, etc. Identify the cause of the trip, then remove the cause and power on the breaker.**

1.3 Removal and reinstallation of the cover

1.3.1 Front cover

FR-D720-165 or less

FR-D740-080 or less

FR-D720S-008 to 100

●Removal (Example of FR-D740-036)

1) Loosen the installation screws of the front cover. (The screws cannot be removed.)
2) Remove the front cover by pulling it like the direction of arrow.

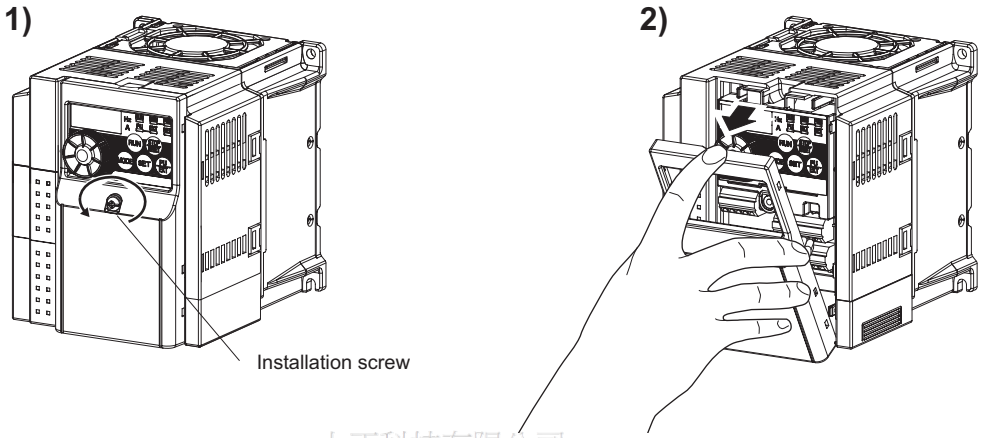

●Reinstallation (Example of FR-D740-036)

1) Place the front cover in front of the inverter, and install it straight.
2) Tighten the installation screws on the front cover.

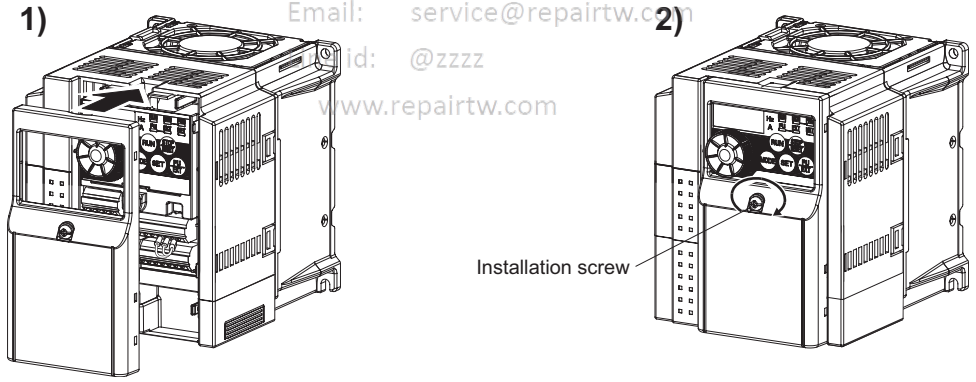

上元科技有限公司
購買、維修 此手冊零組件
電話： 07-466333
Email: service@repairtw.com
Line id: @zzzz
www.repairtw.com

FR-D720-238, 318 and FR-D740-120, 160

●Removal (Example of FR-D740-160)

1) Loosen the installation screws of the front cover. (The screws cannot be removed.)
2) Remove the front cover by pulling it like the direction of arrow with holding the installation hook on the front cover.

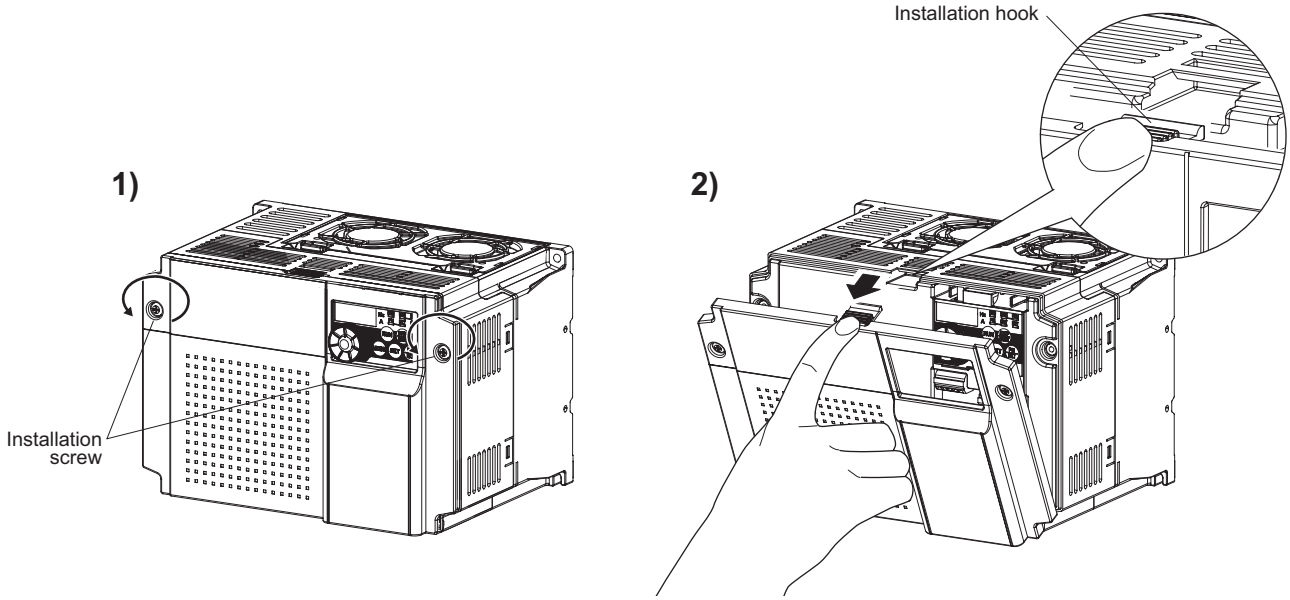

●Reinstallation (Example of FR-D740-160)

1) Insert the two fixed hooks on the lower side of the front cover into the sockets of the inverter.
2) Tighten the installation screws on the front cover.

購買 維修 此手冊零組件
電話： 037-466335
service@repairtw.com
@zzzz
www.repairtw.com

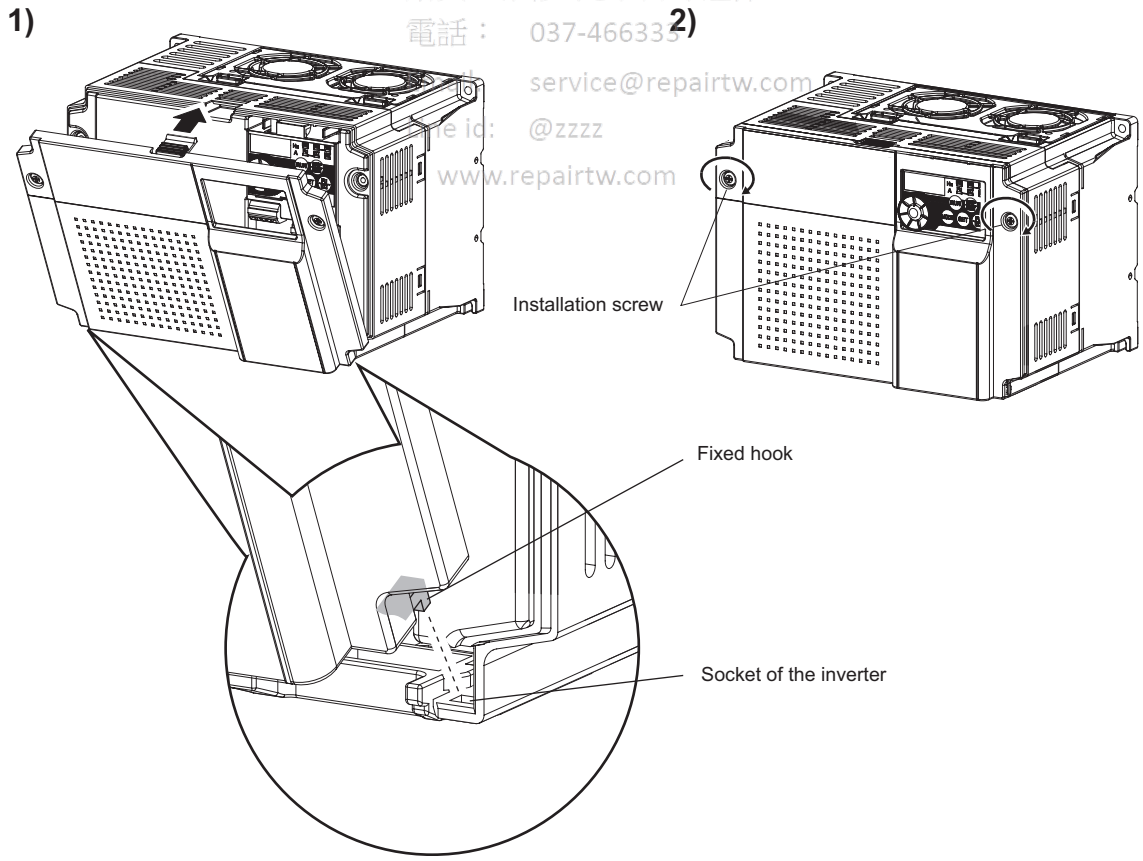

NOTE

- **Fully make sure that the front cover has been reinstalled securely.**
- **The same serial number is printed on the capacity plate of the front cover and the rating plate of the inverter. Since these plates have the same serial numbers, always reinstall the removed cover onto the original inverter.**

1.3.2 Wiring cover

●Removal and reinstallation

FR-D720-165 or less and FR-D740-080 or less and FR-D720S-008 to 100

- Hold the side of the wiring cover, and pull it downward for removal.
  To reinstall, fit the cover to the inverter along the guides.

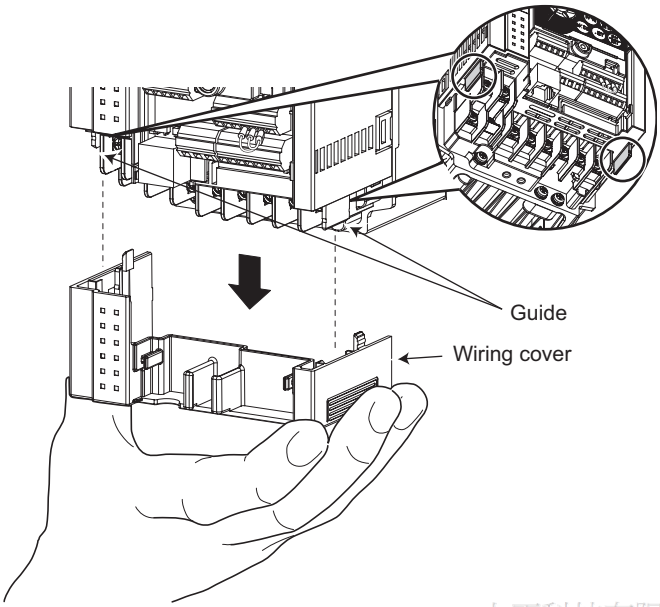

Example of FR-D740-036

- Also pull the wiring cover downward with holding a frontal part of the wiring cover.

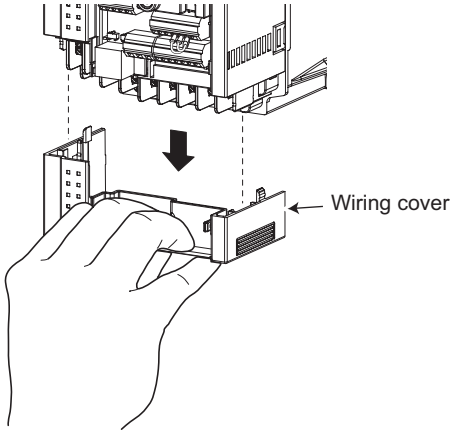

Example of FR-D740-036

- See below diagram for wiring cover of FR-D720-165. Hold the dent of the wiring cover (marked with an arrow) with thumb and the side with other fingers and pull downward for removal.

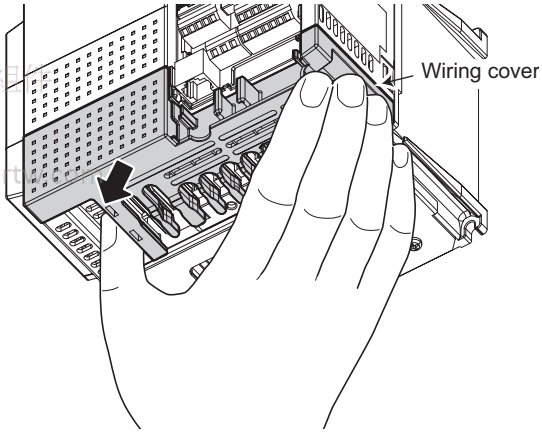

上正科技有限公司
購買、維修 此手冊零組
電話： 037-466333
Email: service@repairt
Line id: @zzzz
www.repairtw.com

FR-D720-238, 318 and FR-D740-120, 160

- The cover can be removed easily by pulling it toward you.
  To reinstall, fit the cover to the inverter along the guides.

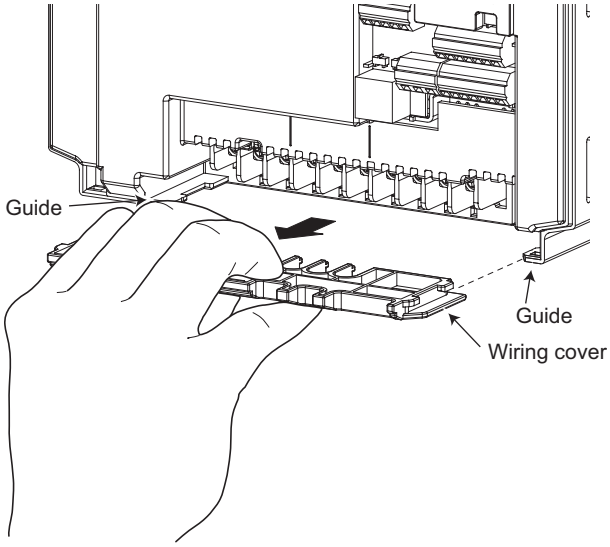

Example of FR-D740-160

1.4 Installation of the inverter and enclosure design

When an inverter panel is to be designed and manufactured, heat generated by contained equipment, etc., the environment of an operating place, and others must be fully considered to determine the panel structure, size and equipment layout. The inverter unit uses many semiconductor devices. To ensure higher reliability and long period of operation, operate the inverter in the ambient environment that completely satisfies the equipment specifications.

1.4.1 Inverter installation environment

As the inverter installation environment should satisfy the standard specifications indicated in the following table, operation in any place that does not meet these conditions not only deteriorates the performance and life of the inverter, but also causes a failure. Refer to the following points and take adequate measures.

Environmental standard specifications of inverter

Item	Description
Surrounding air temperature	-10 to +50°C (14°F to 122°F)(non-freezing)
Ambient humidity	90%RH maximum (non-condensing)
Atmosphere	Free from corrosive and explosive gases, free from dust and dirt
Maximum altitude	1,000m (3280.80 feet) or less
Vibration	5.9m/s^2 or less

(1) Temperature

The permissible surrounding air temperature of the inverter is between -10 and +50°C (14°F to 122°F). Always operate the inverter within this temperature range. Operation outside this range will considerably shorten the service lives of the semiconductors, parts, capacitors and others. Take the following measures so that the surrounding air temperature of the inverter falls within the specified range.

1) Measures against high temperature
   - Use a forced ventilation system or similar cooling system. *(Refer to page 10)*
   - Install the panel in an air-conditioned electrical chamber.
   - Block direct sunlight.
   - Provide a shield or similar plate to avoid direct exposure to the radiated heat and wind of a heat source.
   - Ventilate the area around the panel well.

2) Measures against low temperature
   - Provide a space heater in the enclosure.
   - Do not power off the inverter. (Keep the start signal of the inverter off.)

3) Sudden temperature changes
   - Select an installation place where temperature does not change suddenly.
   - Avoid installing the inverter near the air outlet of an air conditioner.
   - If temperature changes are caused by opening/closing of a door, install the inverter away from the door.

上上科技有限公司
購買、維修 此手冊零組件
電話： 037-466333
Email: service@repairtw.com
Line id: @zzzz
www.repairtw.com

(2) Humidity

Normally operate the inverter within the 45 to 90% range of the ambient humidity. Too high humidity will pose problems of reduced insulation and metal corrosion. On the other hand, too low humidity may produce a spatial electrical breakdown. The insulation distance specified in JEM1103 "Control Equipment Insulator" is defined as humidity 45 to 85%.

1) Measures against high humidity
   - Make the panel enclosed, and provide it with a hygroscopic agent.
   - Take dry air into the enclosure from outside.
   - Provide a space heater in the enclosure.

2) Measures against low humidity
   What is important in fitting or inspection of the unit in this status is to discharge your body (static electricity) beforehand and keep your body from contact with the parts and patterns, besides blowing air of proper humidity into the enclosure from outside.

3) Measures against condensation
   Condensation may occur if frequent operation stops change the in-enclosure temperature suddenly or if the outside-air temperature changes suddenly.
   Condensation causes such faults as reduced insulation and corrosion.
   - Take the measures against high humidity in 1).
   - Do not power off the inverter. (Keep the start signal of the inverter off.)

(3) Dust, dirt, oil mist

Dust and dirt will cause such faults as poor contact of contact points, reduced insulation or reduced cooling effect due to moisture absorption of accumulated dust and dirt, and in-enclosure temperature rise due to clogged filter. In the atmosphere where conductive powder floats, dust and dirt will cause such faults as malfunction, deteriorated insulation and short circuit in a short time.
Since oil mist will cause similar conditions, it is necessary to take adequate measures.

Countermeasures
- Place in a totally enclosed enclosure.
  Take measures if the in-enclosure temperature rises. *(Refer to page 10)*
- Purge air.
  Pump clean air from outside to make the in-enclosure pressure higher than the outside-air pressure.

(4) Corrosive gas, salt damage

If the inverter is exposed to corrosive gas or to salt near a beach, the printed board patterns and parts will corrode or the relays and switches will result in poor contact.
In such places, take the measures given in Section 3.

(5) Explosive, flammable gases

As the inverter is non-explosion proof, it must be contained in an explosion proof enclosure. In places where explosion may be caused by explosive gas, dust or dirt, an enclosure cannot be used unless it structurally complies with the guidelines and has passed the specified tests. This makes the enclosure itself expensive (including the test charges). The best way is to avoid installation in such places and install the inverter in a non-hazardous place.

上正科技有限公司
購買、維修 此手冊零組件
電話： 037-466333
Email: service@repairtw.com
Line Id: @zzzz
www.repairtw.com

(6) Highland

Use the inverter at the altitude of within 1000m (3280.80 feet). If it is used at a higher place, it is likely that thin air will reduce the cooling effect and low air pressure will deteriorate dielectric strength.
Maximum 1000m (3280.80feet) above sea level for standard operation. After that derate by 3% for every extra 500m (1640.40feet) up to 2500m (8202feet) (91%).

(7) Vibration, impact

The vibration resistance of the inverter is up to 5.9m/s^2 at 10 to 55Hz frequency and 1mm amplitude. Vibration or impact, if less than the specified value, applied for a long time may make the mechanism loose or cause poor contact to the connectors. Especially when impact is imposed repeatedly, caution must be taken as the part pins are likely to break.

Countermeasures
- Provide the panel with rubber vibration isolators.
- Strengthen the structure to prevent the enclosure from resonance.
- Install the enclosure away from sources of vibration.

1.4.2 Cooling system types for inverter enclosure

From the enclosure that contains the inverter, the heat of the inverter and other equipment (transformers, lamps, resistors, etc.) and the incoming heat such as direct sunlight must be dissipated to keep the in-enclosure temperature lower than the permissible temperatures of the in-panel equipment including the inverter.

The cooling systems are classified as follows in terms of the cooling calculation method.

1) Cooling by natural heat dissipation from the enclosure surface (totally enclosed type)
2) Cooling by heat sink (aluminum fin, etc.)
3) Cooling by ventilation (forced ventilation type, pipe ventilation type)
4) Cooling by heat exchanger or cooler (heat pipe, cooler, etc.)

Cooling System		Enclosure Structure	Comment
Natural cooling	Natural ventilation (enclosed, open type)	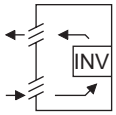	Low in cost and generally used, but the enclosure size increases as the inverter capacity increases. For relatively small capacities.
	Natural ventilation (totally enclosed type)	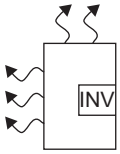	Being a totally enclosed type, the most appropriate for hostile environment having dust, dirt, oil mist, etc. The enclosure size increases depending on the inverter capacity.
Forced cooling	Heatsink cooling	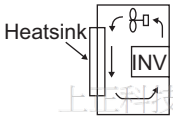	Having restrictions on the heatsink mounting position and area, and designed for relative small capacities.
	Forced ventilation	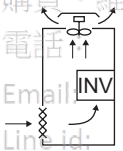	For general indoor installation. Appropriate for enclosure downsizing and cost reduction, and often used.
	Heat pipe	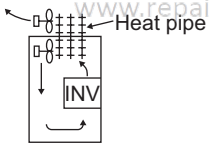	Totally enclosed type for enclosure downsizing.

上元科技有限公司
購買、維修 此手冊零組件
電話: 037-466333
Email: service@repairtw.com
Line id: @zzzz
www.repairtw.com

1.4.3 Inverter placement

(1) Installation of the inverter

Enclosure surface mounting

Remove the front cover and wiring cover to fix the inverter to the surface.

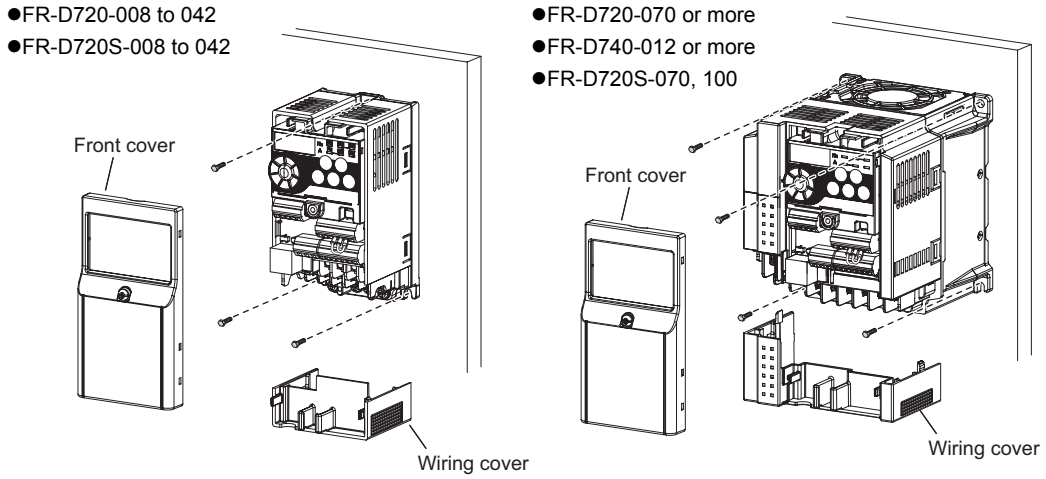

NOTE

- **When encasing multiple inverters, install them in parallel as a cooling measure.**
- **Install the inverter vertically.**

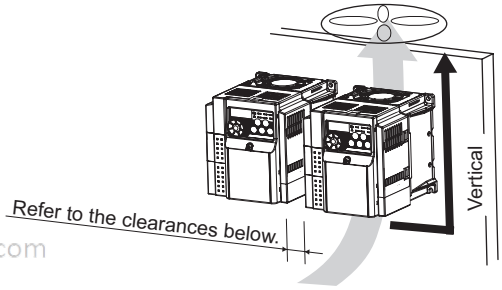

上正科技有限公司
購買、維修 此手冊零組件
電話： 037-466333
Email: service@repairtw.com
Line id: @zzzz
www.repairtw.com

(2) Clearances around inverter

To ensure ease of heat dissipation and maintenance, leave at least the shown clearances around the inverter. At least the following clearances are required under the inverter as a wiring space, and above the inverter as a heat dissipation space.

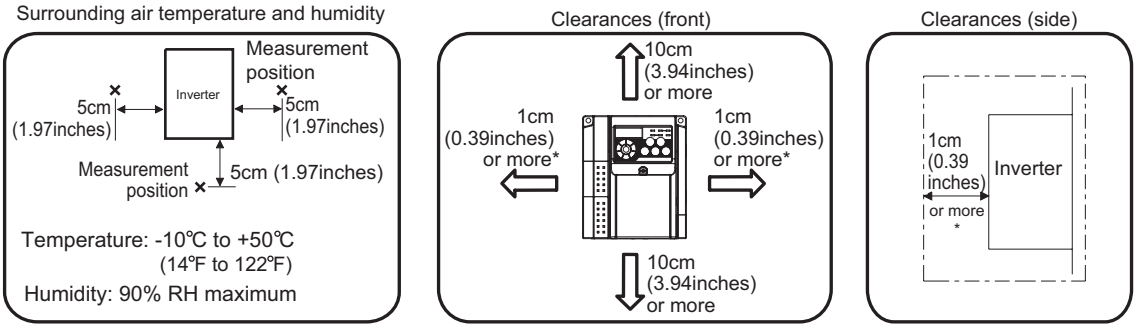

Leave enough clearances and take cooling measures.

* When using the inverters at the surrounding air temperature of 40℃ (104℉) or less, the inverters can be installed without any clearance between them (0cm (0inch) clearance).
When surrounding air temperature exceeds 40℃ (104℉), clearances between the inverters should be 1cm (0.39inches) or more (5cm (1.97inches) or more for the FR-D720-238 or more and FR-D740-120 or more).

* 5cm (1.97inches) or more for the FR-D720-238 or more and FR-D740-120 or more

(3) Inverter mounting orientation

Mount the inverter on a wall as specified. Do not mount it horizontally or any other way.

(4) Above inverter

Heat is blown up from inside the inverter by the small fan built in the unit. Any equipment placed above the inverter should be heat resistant.

(5) Arrangement of multiple inverters

When multiple inverters are placed in the same enclosure, generally arrange them horizontally as shown in the right figure (a). When it is inevitable to arrange them vertically to minimize space, take such measures as to provide guides since heat from the bottom inverters can increase the temperatures in the top inverters, causing inverter failures.

When mounting multiple inverters, fully take caution not to make the surrounding air temperature of the inverter higher than the permissible value by providing ventilation and increasing the enclosure size.

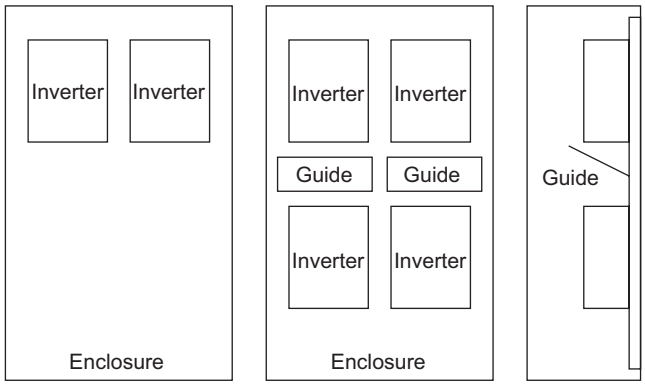

(a) Horizontal arrangement (b) Vertical arrangement

Arrangement of multiple inverters

(6) Arrangement of ventilation fan and inverter

Heat generated in the inverter is blown up from the bottom of the unit as warm air by the cooling fan. When installing a ventilation fan for that heat, determine the place of ventilation fan installation after fully considering an air flow. (Air passes through areas of low resistance. Make an airway and airflow plates to expose the inverter to cool air.)

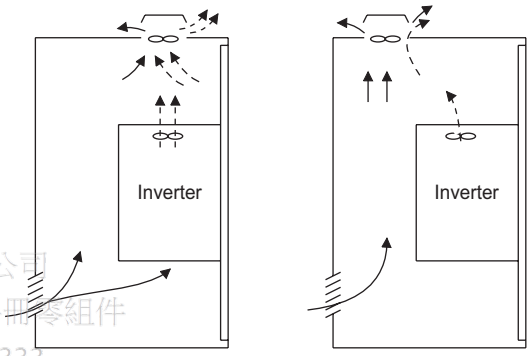

<Good example> <Bad example>

Arrangement of ventilation fan and inverter

上正科技有限公司
購買、維修 此手冊零組件
電話： 037-466333
Email: service@repairtw.com
Line id: @zzzz
www.repairtw.com

2 WIRING

This chapter describes the basic "WIRING" for use of this product.
Always read the instructions before using the equipment

2.1 Wiring 14
2.2 Main circuit terminal specifications 15
2.3 Control circuit specifications 20
2.4 Connection of stand-alone option unit 31

上巧科技有限公司
購買、銷售、此手冊零組件
電話: 037-466333
Email: service@repairtw.com
Line id: @zzzz
www.repairtw.com

2.1 Wiring

2.1.1 Terminal connection diagram

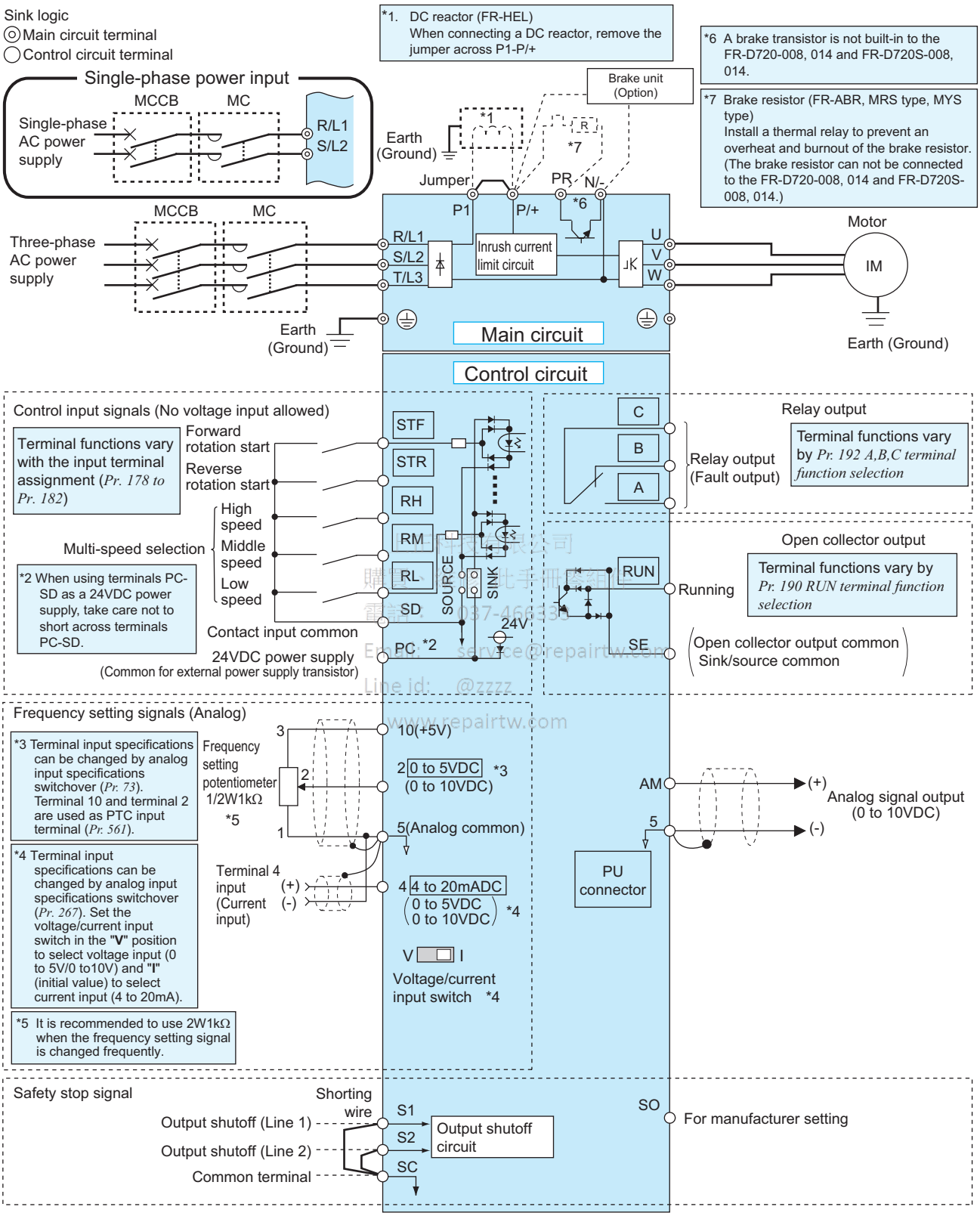

購買、銷售、批手、批零、維修
電話: 037-466335
Email: service@repairtw.com
Line id: @zzzz
www.repairtw.com

NOTE

- **To prevent a malfunction caused by noise, separate the signal cables more than 10cm (3.94inches) from the power cables. Also separate the main circuit wire of the input side and the output side.**
- **After wiring, wire offcuts must not be left in the inverter.**
  Wire offcuts can cause an alarm, failure or malfunction. Always keep the inverter clean. When drilling mounting holes in an enclosure etc., take care not to allow chips and other foreign matter to enter the inverter.
- **The output of the single-phase power input specification is three-phase 200V.**

2.2 Main circuit terminal specifications

2.2.1 Specification of main circuit terminal

Terminal Symbol	Terminal Name	Description
R/L1, S/L2, T/L3 *	AC power input	Connect to the commercial power supply. Keep these terminals open when using the high power factor converter (FR-HC) or power regeneration common converter (FR-CV).
U, V, W	Inverter output	Connect a three-phase squirrel-cage motor.
P/+, PR	Brake resistor connection	Connect a brake resistor (FR-ABR, MRS type, MYS type) across terminals P/+ and PR. (The brake resistor can not be connected to the FR-D720-008 and 014 and FR-D720S-008 and 014.)
P/+, N/-	Brake unit connection	Connect the brake unit (FR-BU2), power regeneration common converter (FR-CV) or high power factor converter (FR-HC).
P/+, P1	DC reactor connection	Remove the jumper across terminals P/+ and P1 and connect a DC reactor.
⏚	Earth (Ground)	For earthing (grounding) the inverter chassis. Must be earthed (grounded).

* When using single-phase power input, terminals are R/L1 and S/L2.

2.2.2 Terminal arrangement of the main circuit terminal, power supply and the motor wiring

●Three-phase 200V class

FR-D720-008 to 042

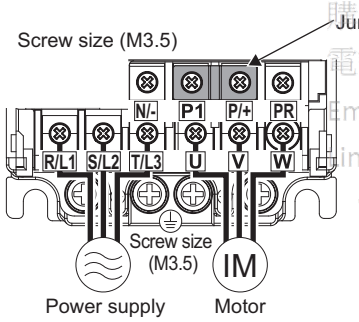

FR-D720-070 to 165

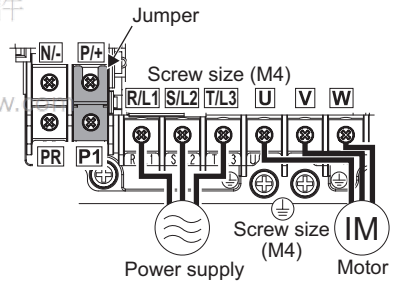

FR-D720-238, 318

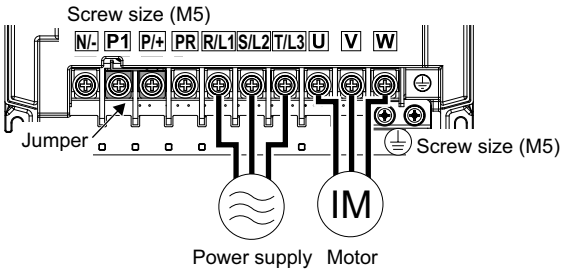

* For wiring to earth (ground) terminals of FR-D720-238 and 318, use the earthing cable wiring space (marked with an arrow) to route the wires.

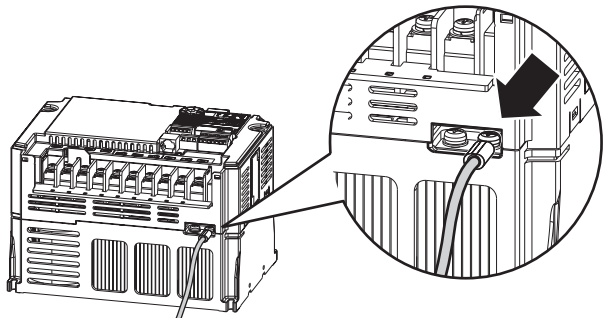

上正科技有限公司
購買、維修 此手冊零組件
電話： 037-466333
Email: service@repairtw.com
Line id: @zzzz
www.repairtw.com

●Three-phase 400V class

FR-D740-012 to 080

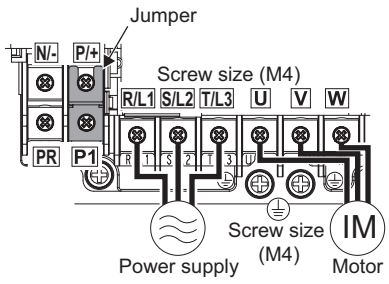

FR-D740-120, 160

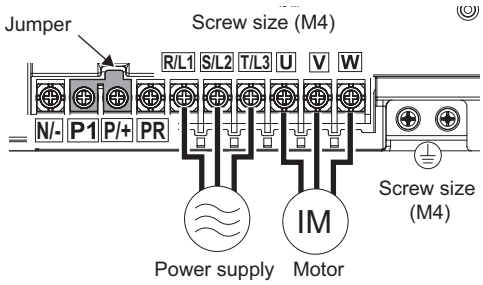

●Single-phase 200V class

FR-D720S-008 to 042

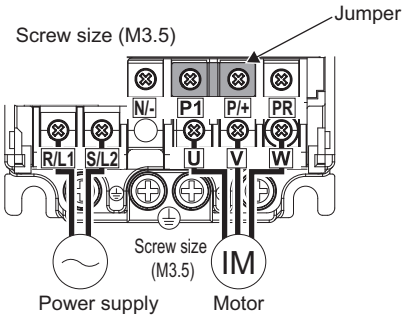

FR-D720S-070, 100

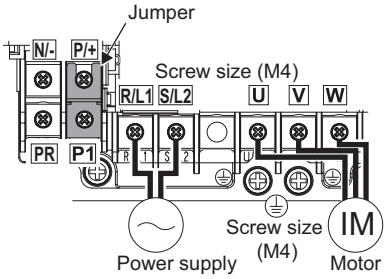

NOTE

- **Make sure the power cables are connected to the R/L1, S/L2, T/L3. (Phase need not be matched.) Never connect the power cable to the U, V, W of the inverter. Doing so will damage the inverter.**
- **Connect the motor to U, V, W. Turning on the forward rotation switch (signal) at this time rotates the motor counterclockwise when viewed from the load shaft.**

上正科技有限公司
購買、維修 工業自動化
電話: 037-463303
Email: service@repairtw.com
Line id: @zzzz
www.repairtw.com

2.2.3 Cables and wiring length

(1) Applied wire size

Select the recommended cable size to ensure that a voltage drop will be 2% max.

If the wiring distance is long between the inverter and motor, a main circuit cable voltage drop will cause the motor torque to decrease especially at the output of a low frequency.

The following table indicates a selection example for the wiring length of 20m (65.61feet).

Three-phase 200V class (when input power supply is 220V)

Applicable Inverter Model	Terminal Screw Size *4	Tightening Torque N·m	Crimping Terminal		Cable Size							
					HIV Cables, etc. (mm^2) *1			AWG *2		PVC Cables, etc. (mm^2) *3		
			R/L1 S/L2 T/L3	U, V, W	R/L1 S/L2 T/L3	U, V, W	Earth (ground) cable	R/L1 S/L2 T/L3	U, V, W	R/L1 S/L2 T/L3	U, V, W	Earth (ground) cable
FR-D720-008 to 042	M3.5	1.2	2-3.5	2-3.5	2	2	2	14	14	2.5	2.5	2.5
FR-D720-070, 100	M4	1.5	2-4	2-4	2	2	2	14	14	2.5	2.5	2.5
FR-D720-165	M4	1.5	5.5-4	5.5-4	3.5	3.5	3.5	12	12	4	4	4
FR-D720-238	M5	2.5	5.5-5	5.5-5	5.5	5.5	5.5	10	10	6	6	6
FR-D720-318	M5	2.5	14-5	8-5	14	8	5.5	6	8	16	10	6

Three-phase 400V class (when input power supply is 440V)

Applicable Inverter Model	Terminal Screw Size *4	Tightening Torque N·m	Crimping Terminal		Cable Size							
					HIV Cables, etc. (mm^2) *1			AWG *2		PVC Cables, etc. (mm^2) *3		
			R/L1 S/L2 T/L3	U, V, W	R/L1 S/L2 T/L3	U, V, W	Earth (ground) cable	R/L1 S/L2 T/L3	U, V, W	R/L1 S/L2 T/L3	U, V, W	Earth (ground) cable
FR-D740-012 to 080	M4	1.5	2-4	2-4	2	2	2	14	14	2.5	2.5	2.5
FR-D740-120	M4	1.5	5.5-4	2-4	3.5	2	3.5	12	14	4	2.5	4
FR-D740-160	M4	1.5	5.5-4	5.5-4	3.5	3.5	3.5	12	12	4	4	4

科技有限公司
購買 維修 此冊零組件
電話 037-466333
Email: service@repairtw.com
Line: @szz
www.repairtw.com

Single-phase 200V class (when input power supply is 220V)

Applicable Inverter Model	Terminal Screw Size *4	Tightening Torque N·m	Crimping Terminal		Cable Size							
					HIV Cables, etc. (mm^2) *1			AWG *2		PVC Cables, etc. (mm^2) *3		
			R/L1 S/L2	U, V, W	R/L1 S/L2	U, V, W	Earth (ground) cable	R/L1 S/L2	U, V, W	R/L1 S/L2	U, V, W	Earth (ground) cable
FR-D720S-008 to 042	M3.5	1.2	2-3.5	2-3.5	2	2	2	14	14	2.5	2.5	2.5
FR-D720S-070	M4	1.5	2-4	2-4	2	2	2	14	14	2.5	2.5	2.5
FR-D720S-100	M4	1.5	5.5-4	2-4	3.5	2	3.5	12	14	4	2.5	4

*1 The cable size is that of the cable (HIV cable (600V class 2 vinyl-insulated cable) etc.) with continuous maximum permissible temperature of 75°C (167°F). Assumes that the surrounding air temperature is 50°C (122°F) or less and the wiring distance is 20m (65.61feet) or less.

*2 The recommended cable size is that of the cable (THHW cable) with continuous maximum permissible temperature of 75°C (167°F). Assumes that the surrounding air temperature is 40°C (104°F) or less and the wiring distance is 20m (65.61feet) or less.
(Selection example for use mainly in the United States.)

*3 The recommended cable size is that of the cable (THHW cable) with continuous maximum permissible temperature of 70°C (158°F). Assumes that the surrounding air temperature is 40°C (104°F) or less and the wiring distance is 20m (65.61feet) or less.
(Selection example for use mainly in Europe.)

*4 The terminal screw size indicates the terminal size for R/L1, S/L2, T/L3, U, V, W, PR, P/+, N/-, P1 and a screw for earthing (grounding).
For single-phase power input, the terminal screw size indicates the size of terminal screw for R/L1, S/L2, U, V, W, PR, P/+, N/-, P1 and a screw for earthing (grounding).

NOTE

- **Tighten the terminal screw to the specified torque. A screw that has been tightened too loosely can cause a short circuit or malfunction. A screw that has been tightened too tightly can cause a short circuit or malfunction due to the unit breakage.**
- **Use crimping terminals with insulation sleeve to wire the power supply and motor.**

The line voltage drop can be calculated by the following formula:

$$\text{line voltage drop [V]} = \frac{\sqrt{3} \times \text{wire resistance[m}\Omega\text{/m]} \times \text{wiring distance[m]} \times \text{current[A]}}{1000}$$

Use a larger diameter cable when the wiring distance is long or when it is desired to decrease the voltage drop (torque reduction) in the low speed range.

(2) Earthing (Grounding) precautions

- Always earth (ground) the motor and inverter.

1) Purpose of earthing (grounding)

Generally, an electrical apparatus has an earth (ground) terminal, which must be connected to the ground before use. An electrical circuit is usually insulated by an insulating material and encased. However, it is impossible to manufacture an insulating material that can shut off a leakage current completely, and actually, a slight current flow into the case. The purpose of earthing (grounding) the case of an electrical apparatus is to prevent operator from getting an electric shock from this leakage current when touching it.

To avoid the influence of external noises, this earthing (grounding) is important to audio equipment, sensors, computers and other apparatuses that handle low-level signals or operate very fast.

2) Earthing (grounding) methods and earthing (grounding) work

As described previously, earthing (grounding) is roughly classified into an electrical shock prevention type and a noise-affected malfunction prevention type. Therefore, these two types should be discriminated clearly, and the following work must be done to prevent the leakage current having the inverter's high frequency components from entering the malfunction prevention type earthing (grounding):

(a)Where possible, use independent earthing (grounding) for the inverter. If independent earthing (grounding) (I) is impossible, use joint earthing (grounding) (II) where the inverter is connected with the other equipment at an earthing (grounding) point. Joint earthing (grounding) as in (III) must be avoided as the inverter is connected with the other equipment by a common earth (ground) cable.

Also a leakage current including many high frequency components flows in the earth (ground) cables of the inverter and inverter-driven motor. Therefore, they must use the independent earthing (grounding) method and be separated from the earthing (grounding) of equipment sensitive to the aforementioned noises.

In a tall building, it will be a good policy to use the noise malfunction prevention type earthing (grounding) with steel frames and carry out electric shock prevention type earthing (grounding) in the independent earthing (grounding) method.

上正科技有限公司
地址：臺北市中正區南昌路1段
電話： 0372-466333
Line id: @zzzz
www.repairtw.com

(b)This inverter must be earthed (grounded). Earthing (Grounding) must conform to the requirements of national and local safety regulations and electrical codes. (NEC section 250, IEC 536 class 1 and other applicable standards).

Use an neutral-point earthed (grounded) power supply for 400V class inverter in compliance with EN standard.

(c)Use the thickest possible earth (ground) cable. The earth (ground) cable should be of not less than the size indicated in the table on the previous *page 17*.

(d)The earthing (grounding) point should be as near as possible to the inverter, and the earth (ground) cable length should be as short as possible.

(e)Run the earth (ground) cable as far away as possible from the I/O wiring of equipment sensitive to noises and run them in parallel in the minimum distance.

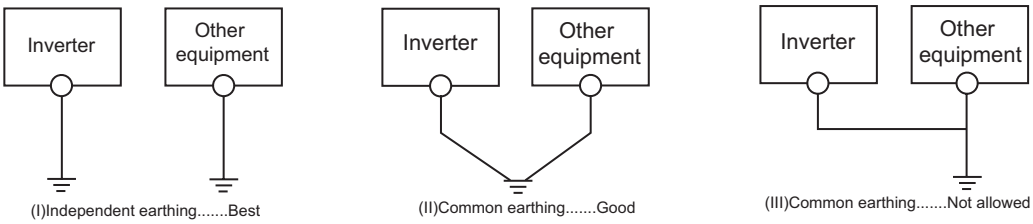

POINT

To be compliant with the European Directive (Low Voltage Directive), *refer to the Installation Guideline*.

(3) Total wiring length

The overall wiring length for connection of a single motor or multiple motors should be within the value in the table below.

200V class

Pr. 72 PWM frequency selection Setting (carrier frequency)	008	014	025	042	070 or More
1 (1kHz) or less	200m (656.19feet)	200m (656.19feet)	300m (984.25feet)	500m (1640.42feet)	500m (1640.42feet)
2 to15 (2kHz to 14.5kHz)	30m (98.42feet)	100m (328.08feet)	200m (656.19feet)	300m (984.25feet)	500m (1640.42feet)

400V class

Pr. 72 PWM frequency selection Setting (carrier frequency)	012	022	036	050	080 or More
1 (1kHz) or less	200m (656.19feet)	200m (656.19feet)	300m (984.25feet)	500m (1640.42feet)	500m (1640.42feet)
2 to15 (2kHz to 14.5kHz)	30m (98.42feet)	100m (328.08feet)	200m (656.19feet)	300m (984.25feet)	500m (1640.42feet)

Total wiring length (FR-D720-070 or more, FR-D720S-070 or more, FR-D740-080 or more)

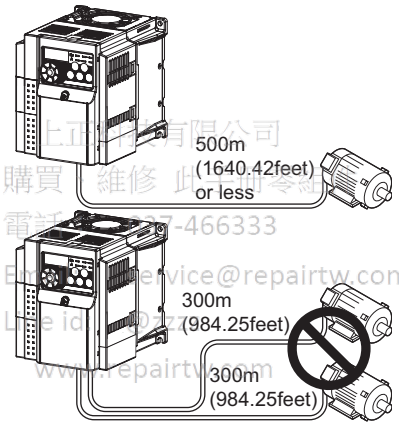

300m(984.25feet) + 300m(984.25feet)
= 600m(1968.50feet)

When driving a 400V class motor by the inverter, surge voltages attributable to the wiring constants may occur at the motor terminals, deteriorating the insulation of the motor.*(Refer to page 83)*

NOTE

- **Especially for long-distance wiring, the inverter may be affected by a charging current caused by the stray capacitances of the wiring, leading to a malfunction of the overcurrent protective function, fast response current limit function, or stall prevention function or a malfunction or fault of the equipment connected on the inverter output side. If malfunction of fast-response current limit function occurs, disable this function. If malfunction of stall prevention function occurs, increase the stall level.** ***(Refer to page 79 for Pr. 22 Stall prevention operation level*** **and** ***Pr. 156 Stall prevention operation selection)***
- **Refer to** *page 148* **for details of** ***Pr. 72 PWM frequency selection*****. Refer to the manual of the option for details of surge voltage suppression filter (FR-ASF-H/FR-BMF-H).**
- **When using the automatic restart after instantaneous power failure function with wiring length exceeding below, select without frequency search (*Pr. 162* = "1, 11").** ***(Refer to page 136)***

Motor capacity (kW(HP))	0.1K(1/8)	0.2K(1/4)	0.4K(1/2) or more
Wiring length	20m (65.61feet)	50m (164.04feet)	100m (323.08feet)

2.3 Control circuit specifications

2.3.1 Control circuit terminal

[ ] indicates that terminal functions can be selected using *Pr. 178 to Pr. 182, Pr. 190, Pr. 192 (I/O terminal function selection)*. *(Refer to page 113)*.

(1) Input signal

Type	Terminal Symbol	Terminal Name	Description		Rated Specifications	Refer to Page
Contact input	STF	Forward rotation start	Turn on the STF signal to start forward rotation and turn it off to stop.	When the STF and STR signals are turned on simultaneously, the stop command is given.	Input resistance 4.7kΩ Voltage when contacts are open 21 to 26VDC When contacts are short-circuited 4 to 6mADC	*117*
	STR	Reverse rotation start	Turn on the STR signal to start reverse rotation and turn it off to stop.			
	RH, RM, RL	Multi-speed selection	Multi-speed can be selected according to the combination of RH, RM and RL signals.			*89*
	SD	Contact input common (sink) (initial setting)	Common terminal for contact input terminal (sink logic).		—	—
		External transistor common (source)	When connecting the transistor output (open collector output), such as a programmable controller, when source logic is selected, connect the external power supply common for transistor output to this terminal to prevent a malfunction caused by undesirable currents.			
		24VDC power supply common	Common output terminal for 24VDC 0.1A power supply (PC terminal). Isolated from terminals 5 and SE.			
	PC	External transistor common (sink) (initial setting)	When connecting the transistor output (open collector output), such as a programmable controller, when sink logic is selected, connect the external power supply common for transistor output to this terminal to prevent a malfunction caused by undesirable currents.		Power supply voltage range 22 to 26.5VDC permissible load current 100mA	*23*
		Contact input common (source)	Common terminal for contact input terminal (source logic).			
		24VDC power supply	Can be used as 24VDC 0.1A power supply.			
Frequency setting	10	Frequency setting power supply	Used as power supply when connecting potentiometer for frequency setting (speed setting) from outside of the inverter. *(Refer to Pr. 73 Analog input selection.)*		5.0V ± 0.2VDC permissible load current 10mA	*150*
	2	Frequency setting (voltage)	Inputting 0 to 5VDC (or 0 to 10V) provides the maximum output frequency at 5V (10V) and makes input and output proportional. Use *Pr. 73* to switch between input 0 to 5VDC input (initial setting) and 0 to 10VDC.		Input resistance10kΩ ± 1kΩ Permissible maximum voltage 20VDC	*150*
	4	Frequency setting (current)	Inputting 4 to 20mADC (or 0 to 5V, 0 to 10V) provides the maximum output frequency at 20mA and makes input and output proportional. This input signal is valid only when the AU signal is on (terminal 2 input is invalid). Use *Pr. 267* to switch from among input 4 to 20mA (initial setting), 0 to 5VDC and 0 to 10VDC. Set the voltage/current input switch in the "V" position to select voltage input (0 to 5V/0 to 10V).		Current input: Input resistance 233Ω ± 5Ω Maximum permissible current 30mA Voltage input: Input resistance10kΩ ± 1kΩ Permissible maximum voltage 20VDC **Current input (initial status)** **Voltage input** 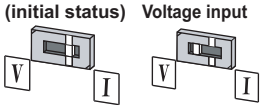	*150*
	5	Frequency setting common	Common terminal for frequency setting signal (terminal 2 or 4) and analog output terminal AM. Do not earth (ground).		—	—
PTC thermistor	10 2	PTC thermistor input	For connecting PTC thermistor output. When PTC thermistor protection is valid (*Pr. 561* ≠ "9999"), terminal 2 is not available for frequency setting.		Adaptive PTC thermistor specification Heat detection resistance : 500Ω to 30kΩ (Set by *Pr. 561*)	*100*

上海欣修电子有限公司
專業 維修 工控產品
電話：0755-[illegible]
Email：[illegible]@[illegible].com
Line id: @zzzz
www.repairtw.com

NOTE

Set *Pr. 267* and a voltage/current input switch correctly, then input analog signals in accordance with the settings. Applying a voltage with voltage/current input switch in "I" position (current input is selected) or a current with switch in "V" position (voltage input is selected) could cause component damage of the inverter or analog circuit of output devices. ***(Refer to page 150 for details.)***

(2) Output signal

Type	Terminal Symbol	Terminal Name	Description	Rated Specifications	Reference Page
Relay	A, B, C	Relay output (fault output)	1 changeover contact output indicates that the inverter protective function has activated and the output stopped. Fault: discontinuity across B-C (continuity across A-C), Normal: continuity across B-C (discontinuity across A-C)	Contact capacity:230VAC 0.3A (power factor =0.4) 30VDC 0.3A	*119*
Open collector	RUN	Inverter running	Switched low when the inverter output frequency is equal to or higher than the starting frequency (initial value 0.5Hz). Switched high during stop or DC injection brake operation. (Low indicates that the open collector output transistor is on (conducts). High indicates that the transistor is off (does not conduct).)	Permissible load 24VDC (maximum 27VDC) 0.1A (a voltage drop is 3.4V maximum when the signal is on)	*119*
	SE	Open collector output common	Common terminal of terminal RUN.	—	—
Analog	AM	Analog signal output	Select one e.g. output frequency from monitor items. Not output during inverter reset. The output signal is proportional to the magnitude of the corresponding monitoring item. Output item: Output frequency (initial setting)	Output signal 0 to 10VDC Permissible load current 1mA (load impedance 10kΩ or more) Resolution 8 bit	*128*

科技有限公司
購買、維修 此手冊零組件
電話： 037-466333
Email: service@repairtw.com
Line id: @222
www.repairtw.com

(3) Communication

Type	Terminal Symbol	Terminal Name	Description	Reference Page
RS-485	—	PU connector	With the PU connector, communication can be made through RS-485. • Conforming standard: EIA-485 (RS-485) • Transmission format: Multidrop link • Communication speed: 4800 to 38400bps • Overall length: 500m (1640.42feet)	*180*

(4) Safety stop signal

Terminal Symbol	Terminal Name	Description	Reference Page
S1	Inverter output shutoff (Line 1)	Inverter output is shutoff depending on shorting/opening between S1 and SC, S2 and SC. At initial state, terminal S1 and S2 are shorted to terminal SC with a shorting wire. When using the safety stop function, remove this shorting wire, and connect to a safety relay module.	—
S2	Inverter output shutoff (Line 2)		
SO	For manufacturer setting		
SC	Output shutoff terminal common	Common terminal for terminals S1, S2. Connected to terminal SD inside of the inverter.	

2.3.2 Changing the control logic

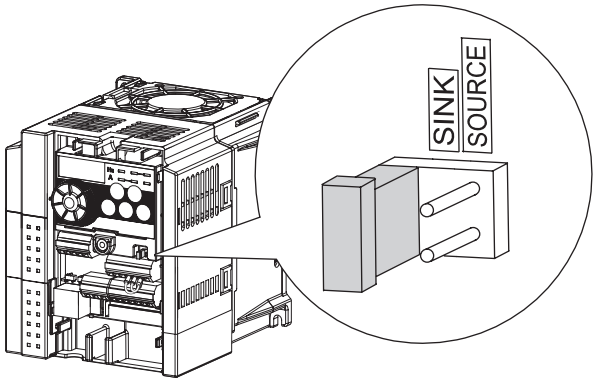

The input signals are set to sink logic (SINK) when shipped from the factory.

To change the control logic, the jumper connector above the control terminal must be moved to the other position.

- Change the jumper connector in the sink logic (SINK) position to source logic (SOURCE) position using tweezers, a pair of long-nose pliers etc. Change the jumper connector position before switching power on.

NOTE

- **Fully make sure that the front cover has been reinstalled securely.**
- **The capacity plate is placed on the front cover and the rating plate is on the inverter. Since these plates have the same serial numbers, always reinstall the removed cover onto the original inverter.**
- **The sink-source logic change-over jumper connector must be fitted in only one of those positions. If it is fitted in both positions at the same time, the inverter may be damaged.**

上正科技有限公司
購買、維修 此手冊零組件
電話： 037-466333
Email: service@repairtw.com
Line id: @zzzz
www.repairtw.com

(1) Sink logic type and source logic type

- In sink logic, a signal switches on when a current flows from the corresponding signal input terminal.
  Terminal SD is common to the contact input signals. Terminal SE is common to the open collector output signals.
- In source logic, a signal switches on when a current flows into the corresponding signal input terminal.
  Terminal PC is common to the contact input signals. Terminal SE is common to the open collector output signals.

●Current flow concerning the input/output signal when sink logic is selected

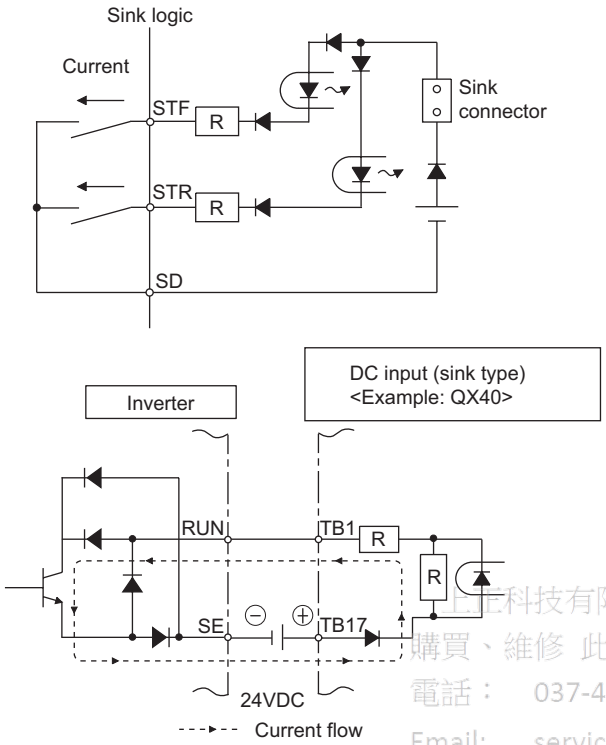

●Current flow concerning the input/output signal when source logic is selected

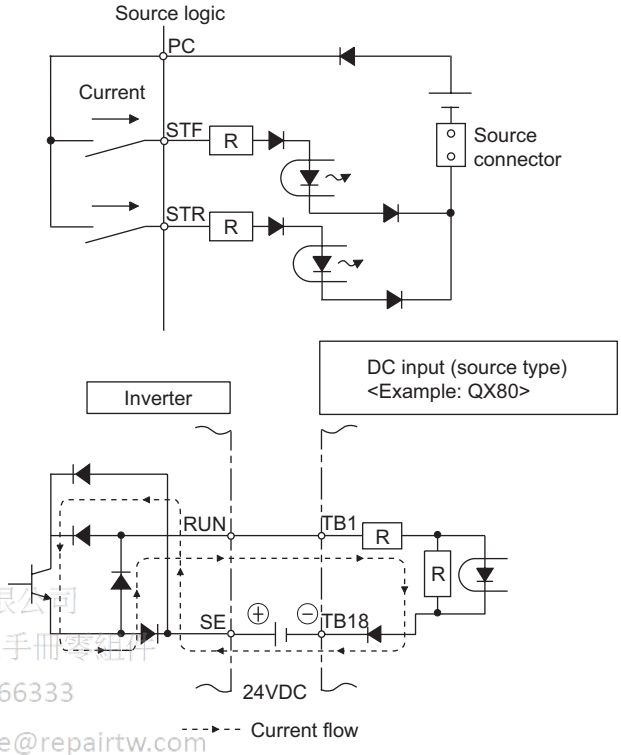

上正科技有限公司
購買、維修 此手冊零組件
電話： 037-466333
Email: service@repairtw.com
Line id: @zzzz
www.repairtw.com

●When using an external power supply for transistor output

- Sink logic type
  Use terminal PC as a common terminal, and perform wiring as shown below. (Do not connect terminal SD of the inverter with terminal 0V of the external power supply. When using terminals PC-SD as a 24VDC power supply, do not install an external power supply in parallel with the inverter. Doing so may cause a malfunction in the inverter due to undesirable currents.)

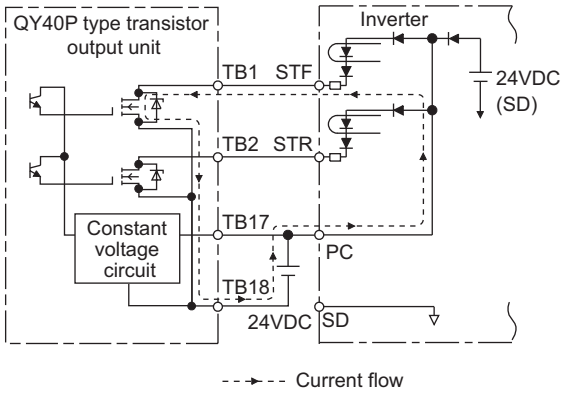

- Source logic type
  Use terminal SD as a common terminal, and perform wiring as shown below. (Do not connect terminal PC of the inverter with terminal +24V of the external power supply. When using terminals PC-SD as a 24VDC power supply, do not install an external power supply in parallel with the inverter. Doing so may cause a malfunction in the inverter due to undesirable currents.)

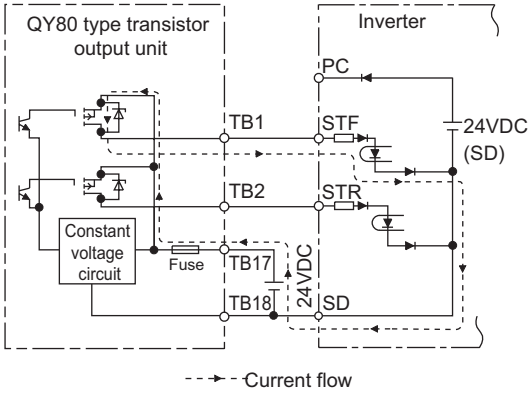

2.3.3 Wiring of control circuit

(1) Standard control circuit terminal layout

Recommend wire size:
0.3mm² to 0.75mm²

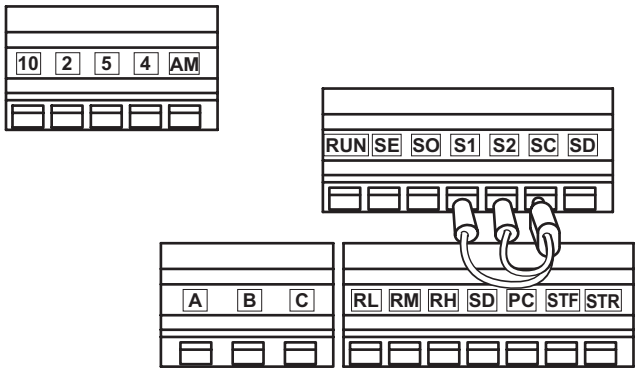

(2) Wiring method

●Wiring

Use a bar terminal and a wire with a sheath stripped off for the control circuit wiring. For a single wire, strip off the sheath of the wire and apply directly.

Insert the bar terminal or the single wire into a socket of the terminal.

1) Strip off the sheath about the size below. If the length of the sheath peeled is too long, a short circuit may occur among neighboring wires. If the length is too short, wires might come off.

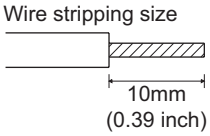

Wire the stripped wire after twisting it to prevent it from becoming loose. In addition, do not solder it.

上豪科技有限公司
銷售 維修 設計 開發
電話： 037-466333
Email: service@repairtw.com
Line id: @zzzz
www.repairtw.com

2) Crimp the bar terminal.

Insert wires to a bar terminal, and check that the wires come out for about 0 to 0.5 mm from a sleeve.

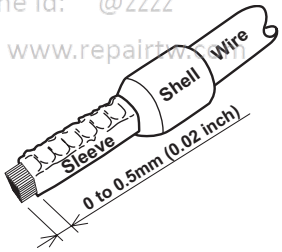

Check the condition of the bar terminal after crimping. Do not use a bar terminal of which the crimping is inappropriate, or the face is damaged.

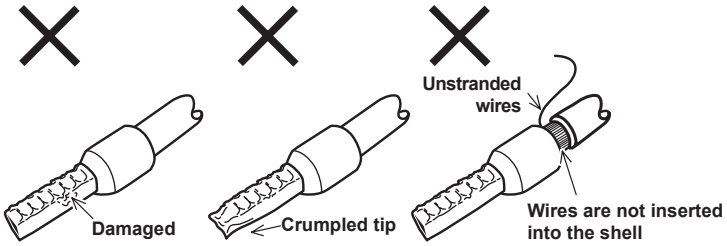

Introduced products on bar terminals :(as of Mar., 2008)

Wire Size (mm²)	Bar Terminal Model		Maker
	with insulation sleeve	without insulation sleeve	
0.3, 0.5	AI 0,5-10WH	—	Phoenix Contact Co.,Ltd.
0.75	AI 0,75-10GY	A 0,75-10	
1	AI 1-10RD	A1-10	
1.25, 1.5	AI 1,5-10BK	A1,5-10	
0.75 (for two wires)	AI-TWIN 2 x 0,75-10GY	—	

Bar terminal crimping tool: CRIMPFOX ZA3 (Phoenix Contact Co., Ltd.)

3) Insert the wire into a socket.

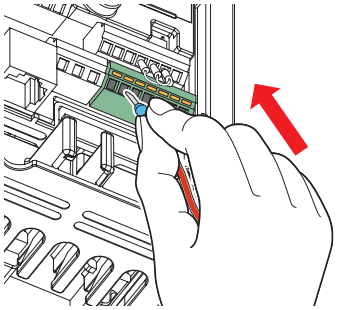

When using a stranded wire without a bar terminal, push an open/close button all the way down with a flathead screw driver, and insert the wire.

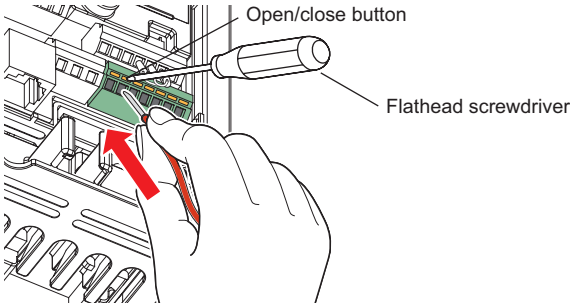

Note

- **When using a stranded wire without a bar terminal, twist enough to avoid short circuit with a nearby terminals or wires.**
- **Place the flathead screwdriver vertical to the open/close button. In case the blade tip slips, it may cause to damage of inverter or injury.**

購買、維修 此手冊零組件
電話： 037-466333
www.repairtw.com

●Wire removal

Pull the wire with pushing the open/close button all the way down firmly with a flathead screwdriver.

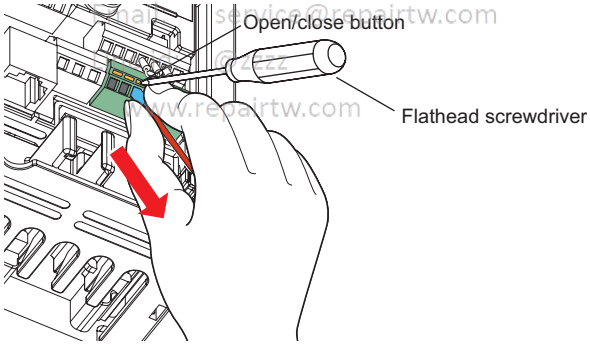

Note

- **Use a small flathead screwdriver (Tip thickness: 0.4mm (0.02 inch)/tip width: 2.5mm (0.10 inch)).**
  If a flathead screwdriver with a narrow tip is used, terminal block may be damaged.
- **Place the flathead screwdriver vertical to the open/close button. In case the blade tip slips, it may cause to damage of inverter or injury.**

(3) Control circuit common terminals (SD, 5, SE)

Terminals SD, SE and 5 are common terminals for I/O signals.(All common terminals are isolated from each other.) Do not earth them. Avoid connecting the terminal SD and 5 and the terminal SE and 5.

Terminal SD is a common terminal for the contact input terminals (STF, STR, RH, RM, RL). The open collector circuit is isolated from the internal control circuit by photocoupler

Terminal 5 is a common terminal for the frequency setting signals (terminals 2 or 4) and analog signal output (AM). It should be protected from external noise using a shielded or twisted cable.

Terminal SE is a common terminal for the open collector output terminal (RUN). The contact input circuit is isolated from the internal control circuit by photocoupler.

上正科技有限公司
購買、維修 此手冊零組件
電話： 037-466333
Email: service@repairtw.com
Line id: @zzzz
www.repairtw.com

(4) Signal inputs by contactless switches

The contacted input terminals of the inverter (STF, STR, RH, RM, RL) can be controlled using a transistor instead of a contacted switch as shown on the right.

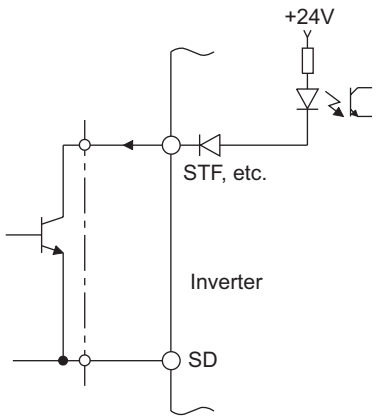

External signal input using transistor

上正科技有限公司
購買、維修 此手冊零組件
電話： 037-466333
Email: service@repairtw.com
Line id: @zzzz
www.repairtw.com

2.3.4 Wiring instructions

1) Use shielded or twisted cables for connection to the control circuit terminals and run them away from the main and power circuits (including the 200V relay sequence circuit).
2) Use two or more parallel micro-signal contacts or twin contacts to prevent contact faults when using contact inputs since the control circuit input signals are micro-currents.

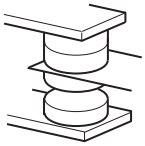
Micro signal contacts

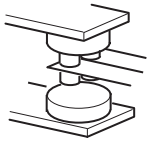
Twin contacts

3) Do not apply a voltage to the contact input terminals (e.g. STF) of the control circuit.
4) Always apply a voltage to the fault output terminals (A, B, C) via a relay coil, lamp, etc.
5) It is recommended to use the cables of 0.3mm^2 to 0.75mm^2 gauge for connection to the control circuit terminals.
   If the cable gauge is 1.25mm^2 or more, the front cover may be lifted when there are many cables running or the cables are run improperly, resulting in a fall off of the front cover.
6) The maximum wiring length should be 30m (98.43feet).
7) Do not short terminal PC and SD. Inverter may be damaged.

上正科技有限公司
購買、維修 此手冊零組件
電話： 037-466333
Email: service@repairtw.com
Line id: @zzzz
www.repairtw.com

2.3.5 Connection to the PU connector

Using the PU connector, you can perform communication operation from the parameter unit (FR-PU07), enclosure surface operation panel (FR-PA07), or a personal computer etc.
Remove the inverter front cover when connecting.

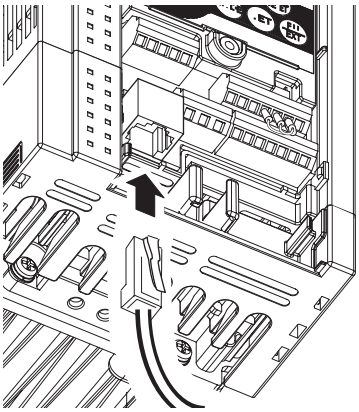

●When connecting the parameter unit, enclosure surface operation panel using a connection cable

Use the optional FR-CB2□□ or connector and cable available on the market.
Insert the cable plugs securely into the PU connector of the inverter and the connection connector of the FR-PU07, FR-PA07 along the guide until the tabs snap into place.
Install the inverter front cover after connecting.

上正科技有限公司
購買、維修 此手冊零組件
電話： 037-466333
Email: service@repairtw.com
www.repairtw.com

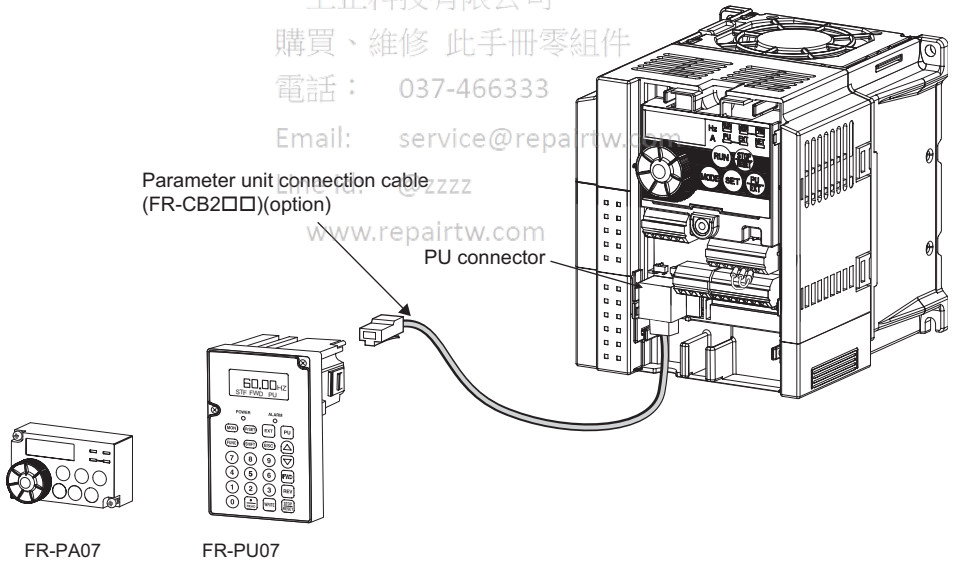

REMARKS

- Overall wiring length when the parameter unit is connected: max 20m (65.6feet)
- Refer to the following when fabricating the cable on the user side.
  Examples of product available on the market (as of February, 2008)

	Product	Type	Maker
1)	10BASE-T cable	SGLPEV-T 0.5mm × 4P	Mitsubishi Cable Industries, Ltd.

●RS-485 communication

When the PU connector is connected with a personal, FA or other computer by a communication cable, a user program can run and monitor the inverter or read and write to parameters.
The protocol can be selected from Mitsubishi inverter and Modbus RTU.

- **PU connector pin-outs**

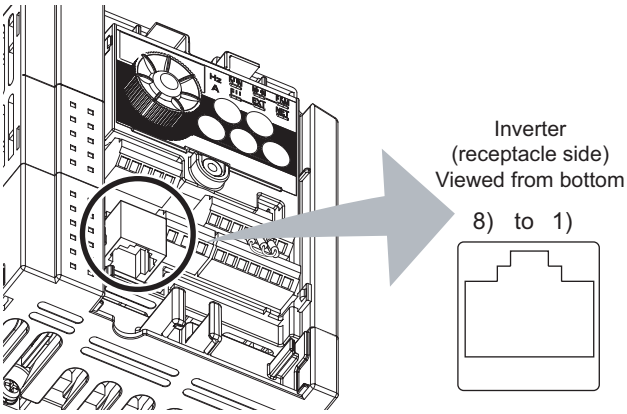

Pin Number	Name	Description
1)	SG	Earth (ground) (connected to terminal 5)
2)	—	Parameter unit power supply
3)	RDA	Inverter receive+
4)	SDB	Inverter send-
5)	SDA	Inverter send+
6)	RDB	Inverter receive-
7)	SG	Earth (ground) (connected to terminal 5)
8)	—	Parameter unit power supply

NOTE

- **Pins No. 2 and 8 provide power to the parameter unit. Do not use these pins for RS-485 communication.**
- **When making RS-485 communication between the FR-D700 series, FR-E500 series and FR-S500 series, incorrect connection of pins No.2 and 8 (parameter unit power supply) of the above PU connector may result in the inverter malfunction or failure.**
- **Do not connect the PU connector to the computer's LAN board, FAX modem socket or telephone modular connector. The product could be damaged due to differences in electrical specifications.**

自動化專用維修中心
購買、維修、出售工控電子產品
電話： 037-466333
Email: service@repairtw.com
Line id: @zzzz
www.repairtw.com

For further details, *refer to page 180*.

•Conforming standard: EIA-485 (RS-485)
•Transmission form: Multidrop link
•Communication speed: Maximum 38400 bps
•Overall extension: 500m (1640feet)

2.4 Connection of stand-alone option unit

The inverter accepts a variety of stand-alone option units as required.
Incorrect connection will cause inverter damage or accident. Connect and operate the option unit carefully in accordance with the corresponding option unit manual.

2.4.1 Connection of a dedicated external brake resistor (MRS type, MYS type, FR-ABR) (FR-D720-025 or more, FR-D740-012 or more, FR-D720S-025 or more)

Install a dedicated brake resistor (MRS type, MYS type, FR-ABR) outside when the motor driven by the inverter is made to run by the load, quick deceleration is required, etc. Connect a dedicated brake resistor (MRS type, MYS type, FR-ABR) to terminal P/+ and PR. (For the locations of terminal P/+ and PR, refer to the terminal block layout *(page 15)*.)
Set parameters below.

Connected Brake Resistor	*Pr. 30 Regenerative function selection* Setting	*Pr. 70 Special regenerative brake duty* Setting	
MRS type, MYS type	0 (initial value)	—	
MYS type (used at 100% torque/6%ED)	1	6%	*Refer to page 110*
FR-ABR	1	10%	

NOTE

The brake resistor connected should only be the dedicated brake resistor.

FR-D720-070 to 165 FR-D740-012 to 080 FR-D720S-070, 100	FR-D720-238, 318 FR-D740-120, 160
Connect the brake resistor across terminals P/+ and PR. 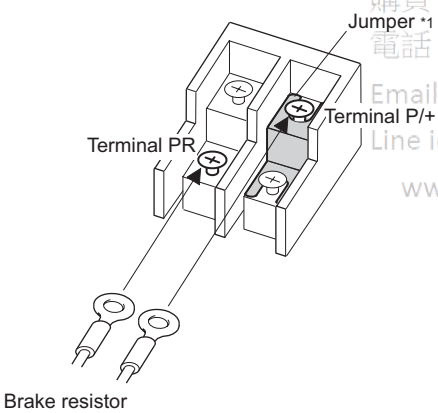 	Connect the brake resistor across terminals P/+ and PR. 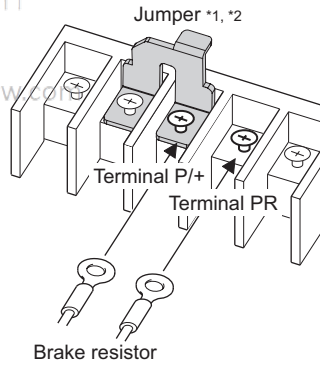
FR-D720-025, 042 FR-D720S-025, 042	
Connect the brake resistor across terminals P/+ and PR. 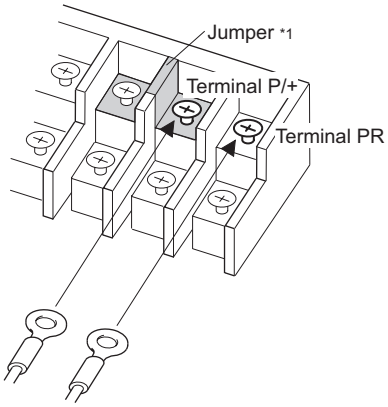 	

上正科技有限公司
購買、維修 此手冊零組件
電話： 037-466333
Email: service@repairtw.com
Line id: @zzzz
www.repairtw.com

*1 Do not remove a jumper across terminal P/+ and P1 except when connecting a DC reactor.
*2 The shape of jumper differs according to capacities.

(1) When using the brake resistor (MRS type, MYS type) and high-duty brake resistor (FR-ABR)

- It is recommended to configure a sequence, which shuts off power in the input side of the inverter by the external thermal relay as shown below, to prevent overheat and burnout of the brake resistor (MRS type, MYS type) and high duty brake resistor (FR-ABR) in case the regenerative brake transistor is damaged. (The brake resistor can not be connected to the FR-D720-008 or 014 and FR-D720S-008 or 014.)

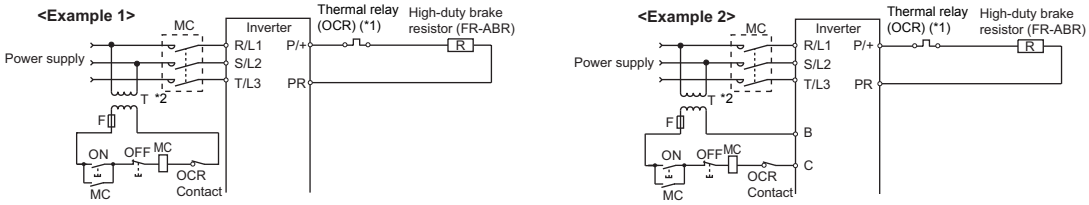

*1 Refer to the table below for the type number of each capacity of thermal relay and the diagram below for the connection.

*2 When the power supply is 400V class, install a step-down transformer.

Power Supply Voltage	Brake Resistor	Thermal Relay Type (Mitsubishi product)	Contact Rating
200V	MRS120W200	TH-N20CXHZ-0.7A	110VAC 5A, 220VAC 2A(AC11 class) 110VDC 0.5A, 220VDC 0.25A(DC11class)
	MRS120W100	TH-N20CXHZ-1.3A	
	MRS120W60	TH-N20CXHZ-2.1A	
	MRS120W40	TH-N20CXHZ-3.6A	
	MYS220W50 (two units in parallel)	TH-N20CXHZ-5A	

Power Supply Voltage	High-duty Brake Resistor	Thermal Relay Type (Mitsubishi product)	Contact Rating
200V	FR-ABR-0.4K	TH-N20CXHZ-0.7A	110VAC 5A, 220VAC 2A(AC11 class) 110VDC 0.5A, 220VDC 0.25A(DC11 class)
	FR-ABR-0.75K	TH-N20CXHZ-1.3A	
	FR-ABR-2.2K	TH-N20CXHZ-2.1A	
	FR-ABR-3.7K	TH-N20CXHZ-3.6A	
	FR-ABR-5.5K	TH-N20CXHZ-5A	
	FR-ABR-7.5K	TH-N20CXHZ-6.6A	
400V	FR-ABR-H0.4K	TH-N20CXHZ-0.24A	
	FR-ABR-H0.75K	TH-N20CXHZ-0.35A	
	FR-ABR-H1.5K	TH-N20CXHZ-0.9A	
	FR-ABR-H2.2K	TH-N20CXHZ-1.3A	
	FR-ABR-H3.7K	TH-N20CXHZ-2.1A	
	FR-ABR-H5.5K	TH-N20CXHZ-2.5A	
	FR-ABR-H7.5K	TH-N20CXHZ-3.6A	

上揚有限公司
銷售 維修 此手冊零組件
037-466333
service@repairtw.com
LINE ID: @repairtw.com

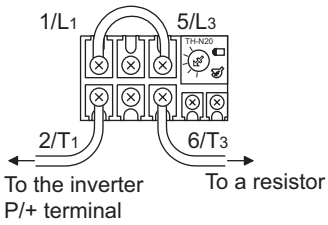

NOTE

- **Brake resistor can not be used with the brake unit, high power factor converter, power supply regeneration converter, etc.**
- **Do not use the brake resistor with a lead wire extended.**
- **Do not connect a resistor directly to the DC terminals P/+ and N/-. This could cause a fire.**

2.4.2 Connection of the brake unit (FR-BU2)

Connect the brake unit (FR-BU2(-H)) as shown below to improve the braking capability at deceleration. If the transistors in the brake unit should become faulty, the resistor can be unusually hot. To prevent unusual overheat and fire, install a magnetic contactor on the inverter's input side to configure a circuit so that a current is shut off in case of fault.

(1) Connection example with the GRZG type discharging resistor

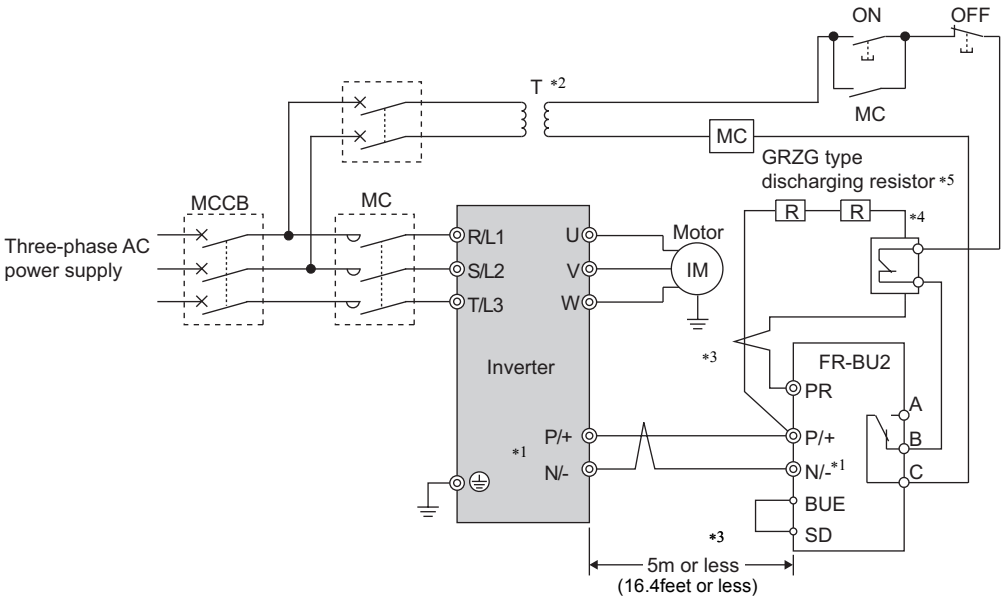

上正科技有限公司
購買、維修、供手冊零組件
電話: 03-4085333
Email: service@repairtw.com
Line Id: @zzzz
www.repairtw.com

*1 Connect the inverter terminals (P/+ and N/-) and brake unit (FR-BU2) terminals so that their terminal names match with each other.
(Incorrect connection will damage the inverter and brake unit.)
*2 When the power supply is 400V class, install a step-down transformer.
*3 The wiring distance between the inverter, brake unit (FR-BU2) and discharging resistor should be within 5m(16.4feet) each. Even when the wiring is twisted, the cable length must not exceed 10m(32.8feet).
*4 It is recommended to install an external thermal relay to prevent overheat of discharging resistor.
*5 Refer to FR-BU2 manual for connection method of discharging resistor.

<Recommended external thermal relay>

Brake Unit	Discharging Resistor	Recommended External Thermal Relay
FR-BU2-1.5K	GZG 300W-50Ω (one)	TH-N20CXHZ 1.3A
FR-BU2-3.7K	GRZG 200-10Ω (three in series)	TH-N20CXHZ 3.6A
FR-BU2-7.5K	GRZG 300-5Ω (four in series)	TH-N20CXHZ 6.6A
FR-BU2-15K	GRZG 400-2Ω (six in series)	TH-N20CXHZ 1.1A
FR-BU2-H7.5K	GRZG 200-10Ω (six in series)	TH-N20CXHZ 3.6A
FR-BU2-H15K	GRZG 300-5Ω (eight in series)	TH-N20CXHZ 6.6A

NOTE

- **Set "1" in *Pr. 0 Brake mode selection* of the FR-BU2 to use GRZG type discharging resistor.**
- **Do not remove a jumper across terminal P/+ and P1 except when connecting a DC reactor.**

(2) Connection example with the FR-BR(-H) type resistor

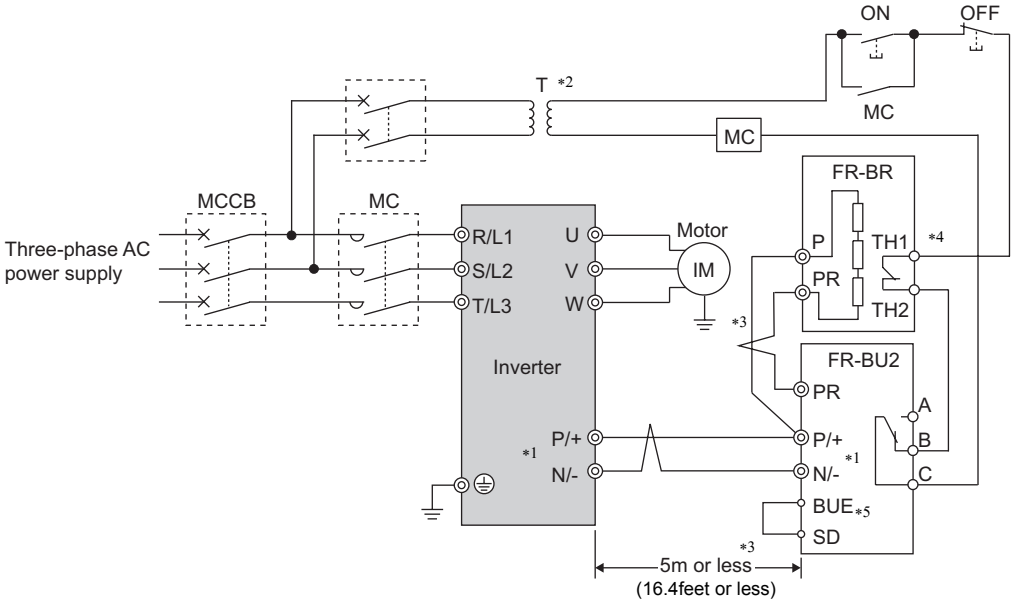

*1 Connect the inverter terminals (P/+ and N/-) and brake unit (FR-BU2) terminals so that their terminal names match with each other.
(Incorrect connection will damage the inverter and brake unit.)
*2 When the power supply is 400V class, install a step-down transformer.
*3 The wiring distance between the inverter, brake unit (FR-BU2) and resistor unit (FR-BR) should be within 5m(16.4feet) each. Even when the wiring is twisted, the cable length must not exceed 10m(32.8feet).
*4 Normal: across TH1-TH2...close, Alarm: across TH1-TH2...open
*5 A jumper is connected across BUE and SD in the initial status.

原廠維修公司
購買、維修 此手冊零組件
電話： 037-466333
Email: service@repairtw.com

NOTE

- **Do not remove a jumper across terminal P/+ and P1 except when connecting a DC reactor.**

2.4.3 Connection of the high power factor converter (FR-HC)

When connecting the high power factor converter (FR-HC) to suppress power harmonics, perform wiring securely as shown below. Incorrect connection will damage the high power factor converter and inverter.

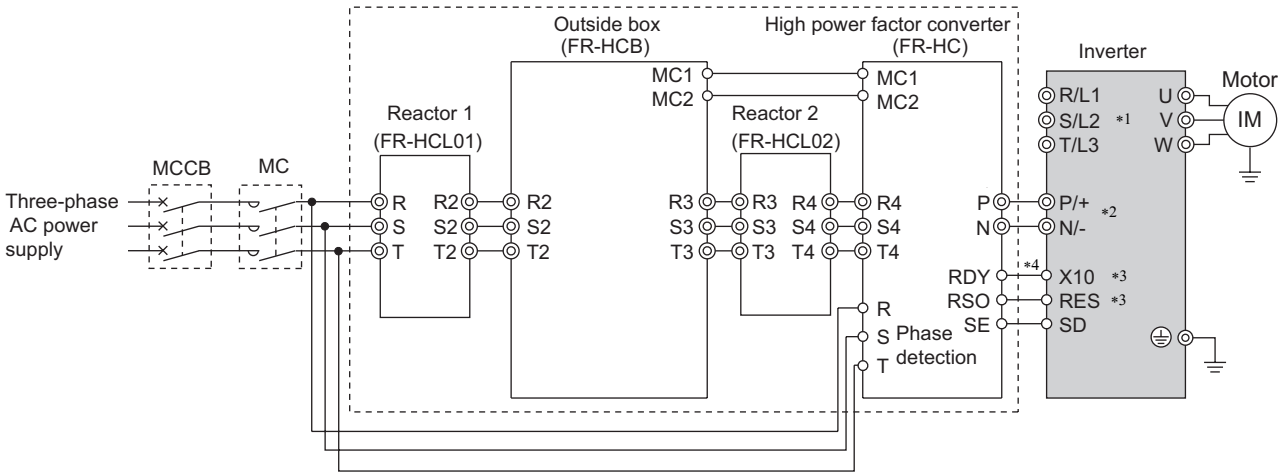

*1 Always keep the power input terminals R/L1, S/L2, T/L3 open. Incorrect connection will damage the inverter.
*2 Do not insert an MCCB between the terminals P/+ and N/- (between P and P/+, between N and N/-). Opposite polarity of terminals N/- and P/+ will damage the inverter.
*3 Use *Pr. 178 to Pr. 182 (input terminal function selection)* to assign the terminals used for the X10, RES signal. *(Refer to page 113)*
*4 Be sure to connect terminal RDY of the FR-HC to the X10 signal or MRS signal assigned terminal of the inverter, and connect terminal SE of the FR-HC to terminal SD of the inverter. Without proper connecting, FR-HC will be damaged.

NOTE

- **The voltage phases of terminals R/L1, S/L2, T/L3 and terminals R4, S4, T4 must be matched.**
- **Use sink logic (factory setting) when the FR-HC is connected. The FR-HC cannot be connected when source logic is selected.**
- **Do not remove a jumper across terminal P/+ and P1.**

2.4.4 Connection of the power regeneration common converter (FR-CV)

When connecting the power regeneration common converter (FR-CV), connect the inverter terminals (P/+ and N/-) and power regeneration common converter (FR-CV) terminals as shown below so that their symbols match with each other.

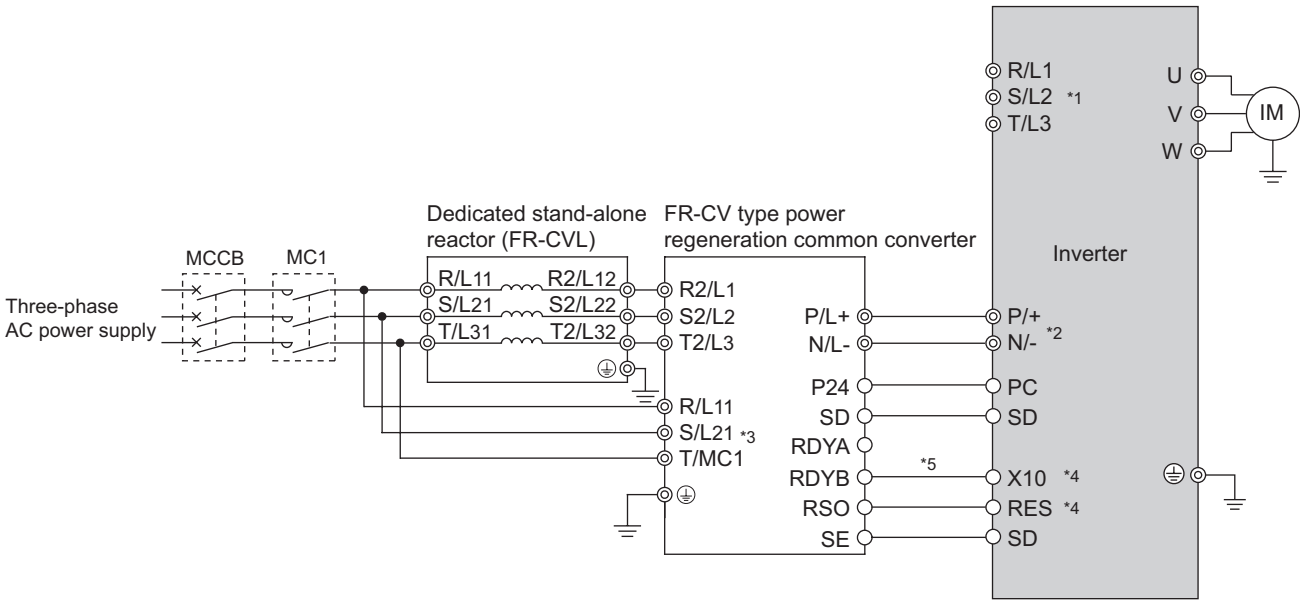

*1 Always keep the power input terminals R/L1, S/L2, T/L3 open. Incorrect connection will damage the inverter.
*2 Do not insert an MCCB between the terminals P/+ and N/- (between P/L+ and P/+, between N/L- and N/-). Opposite polarity of terminals N/- and P/+ will damage the inverter.
*3 Always connect the power supply and terminals R/L11, S/L21, T/MC1.
Operating the inverter without connecting them will damage the power regeneration common converter.
*4 Use *Pr. 178 to Pr. 182 (input terminal function selection)* to assign the terminals used for the X10, RES signal. *(Refer to page 113)*
*5 Be sure to connect terminal RDYB of the FR-CV to the X10 signal or MRS signal assigned terminal of the inverter, and connect terminal SE of the FR-CV to terminal SD of the inverter. Without proper connecting, FR-CV will be damaged.

電話： 037-466333
Email: service@repairtw.com
www.repairtw.com

NOTE

- **The voltage phases of terminals R/L11, S/L21, T/MC1 and terminals R2/L1, S2/L2, T2/L3 must be matched.**
- **Use sink logic (factory setting) when the FR-CV is connected. The FR-CV cannot be connected when source logic is selected.**
- **Do not remove a jumper across terminal P/+ and P1.**

2.4.5 Connection of a DC reactor (FR-HEL)

When using the DC reactor (FR-HEL), connect it across terminals P/+ and P1.
In this case, the jumper connected across terminals P/+ and P1 must be removed. Otherwise, the reactor will not exhibit its performance.

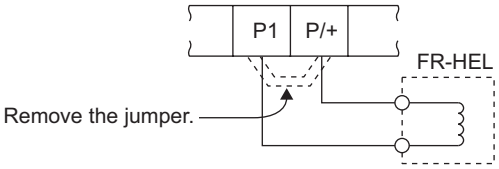

NOTE

- **The wiring distance should be within 5m (16.4feet).**
- **The size of the cables used should be equal to or larger than that of the power supply cables (R/L1, S/L2, T/L3).** ***(Refer to page 17)***

MEMO

上正科技有限公司
購買、維修 此手冊零組件
電話： 037-466333
Email: service@repairtw.com
Line id: @zzzz
www.repairtw.com

3 PRECAUTIONS FOR USE OF THE INVERTER

This chapter explains the "PRECAUTIONS FOR USE OF THE INVERTER" for use of this product.
Always read the instructions before using the equipment

3.1 EMC and leakage currents 38
3.2 Installation of power factor improving reactor 43
3.3 Power-off and magnetic contactor (MC) 44
3.4 Inverter-driven 400V class motor 45
3.5 Precautions for use of the inverter 46
3.6 Failsafe of the system which uses the inverter 48

上正科技有限公司
購買、維修 此手冊零組件
電話： 037-466333
Email: service@repairtw.com
Line id: @zzzz
www.repairtw.com

3.1 EMC and leakage currents

3.1.1 Leakage currents and countermeasures

Capacitances exist between the inverter I/O cables, other cables and earth and in the motor, through which a leakage current flows. Since its value depends on the static capacitances, carrier frequency, etc., low acoustic noise operation at the increased carrier frequency of the inverter will increase the leakage current. Therefore, take the following measures. Select the earth leakage current breaker according to its rated sensitivity current, independently of the carrier frequency setting.

(1) To-earth (ground) leakage currents

Leakage currents may flow not only into the inverter's own line but also into the other lines through the earth (ground) cable, etc. These leakage currents may operate earth (ground) leakage circuit breakers and earth leakage relays unnecessarily.

●Suppression technique

- If the carrier frequency setting is high, decrease the *Pr. 72 PWM frequency selection* setting.
  Note that motor noise increases. Selecting *Pr. 240 Soft-PWM operation selection* makes the sound inoffensive.
- By using earth leakage circuit breakers designed for harmonic and surge suppression in the inverter's own line and other line, operation can be performed with the carrier frequency kept high (with low noise).

●To-earth (ground) leakage currents

- Take caution as long wiring will increase the leakage current. Decreasing the carrier frequency of the inverter reduces the leakage current.
- Increasig the motor capacity increases the leakage current. The leakage current of the 400V class is larger than that of the 200V class.

(2) Line-to-line leakage currents

Harmonics of leakage currents flowing in static capacitances between the inverter output cables may operate the external thermal relay unnecessarily. When the wiring length is long (50m (164.04feet) or more) for the 400V class small-capacity model (FR-D740-160 or less), the external thermal relay is likely to operate unnecessarily because the ratio of the leakage current to the rated motor current increases.

購買、維修 此手冊零組件
電話： 037-466333
www.repairtw.com

●Line-to-line leakage current data example

Motor Capacity (kW (HP))	Rated Motor Current (A)	Leakage Current (mA) *	
		Wiring length 50m (164.04feet)	Wiring length 100m (328.08feet)
0.4 (1/2)	1.1	620	1000
0.75 (1)	1.9	680	1060
1.5 (2)	3.5	740	1120
2.2 (3)	4.1	800	1180
3.7 (5)	6.4	880	1260
5.5 (7.5)	9.7	980	1360

•Motor: SF-JR 4P
•Carrier frequency: 14.5kHz
•Used wire: 2mm^2, 4 cores Cabtyre cable

*The leakage currents of the 200V class are about a half.

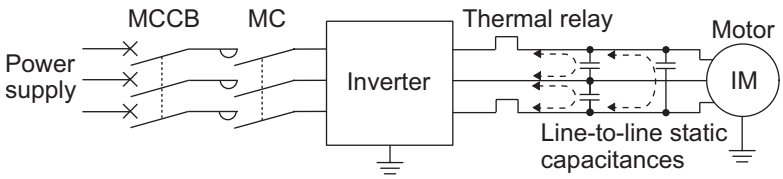

Line-to-line leakage currents path

●Measures

- Use *Pr. 9 Electronic thermal O/L relay*.
- If the carrier frequency setting is high, decrease the *Pr. 72 PWM frequency selection* setting.
  Note that motor noise increases. Selecting *Pr. 240 Soft-PWM operation selection* makes the sound inoffensive.
  To ensure that the motor is protected against line-to-line leakage currents, it is recommended to use a temperature sensor to directly detect motor temperature.

●Installation and selection of moulded case circuit breaker

Install a moulded case circuit breaker (MCCB) on the power receiving side to protect the wiring of the inverter input side. Select the MCCB according to the inverter input side power factor (which depends on the power supply voltage, output frequency and load). Especially for a completely electromagnetic MCCB, one of a slightly large capacity must be selected since its operation characteristic varies with harmonic currents. (Check it in the data of the corresponding breaker.) As an earth leakage current breaker, use the Mitsubishi earth leakage current breaker designed for harmonics and surge suppression.

(3) Selection of rated sensitivity current of earth (ground) leakage current breaker

When using the earth leakage current breaker with the inverter circuit, select its rated sensitivity current as follows, independently of the PWM carrier frequency.

- Breaker designed for harmonic and surge suppression
  Rated sensitivity current:
  $I\Delta n \geq 10 \times (Ig1+Ign+Igi+Ig2+Igm)$
- Standard breaker
  Rated sensitivity current:
  $I\Delta n \geq 10 \times \{Ig1+Ign+Igi+3 \times (Ig2+Igm)\}$

Ig1, Ig2: Leakage currents in wire path during commercial power supply operation
Ign: Leakage current of inverter input side noise filter
Igm: Leakage current of motor during commercial power supply operation
Igi: Leakage current of inverter unit

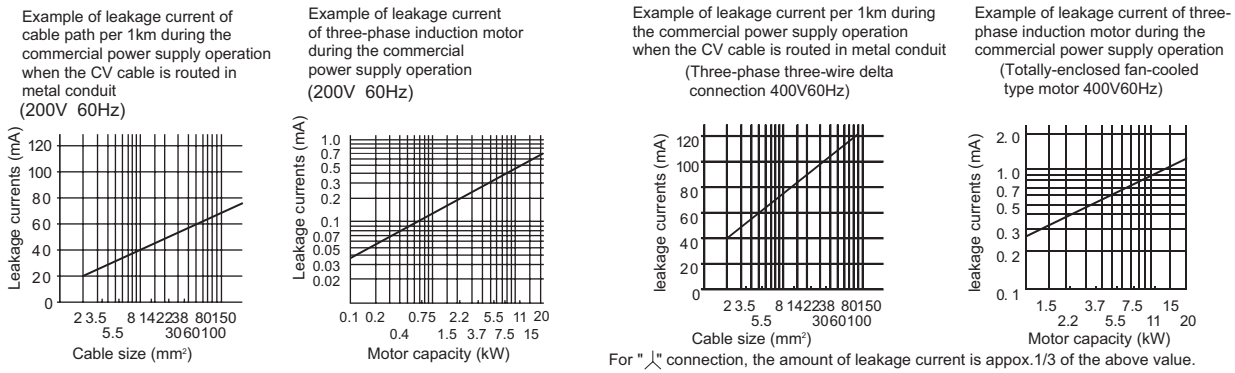

For "⅄" connection, the amount of leakage current is appox.1/3 of the above value.

<Example>

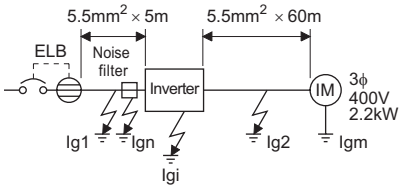

●Selection example (in the case of the left figure (400V class ⅄ connection))

	Breaker Designed for Harmonic and Surge Suppression	Standard Breaker
Leakage current Ig1 (mA)	$\frac{1}{3} \times 66 \times \frac{5m}{1000m} = 0.11$	
Leakage current Ign (mA)	0 (without noise filter)	
Leakage current Igi (mA)	1	
Leakage current Ig2 (mA)	$\frac{1}{3} \times 66 \times \frac{60m}{1000m} = 1.32$	
Motor leakage current Igm (mA)	0.36	
Total leakage current (mA)	2.79	6.15
Rated sensitivity current (mA) (≥ Ig × 10)	30	100

上正科技有限公司
購買、維修、此手冊零組件
電話：886-2-2917-0168
Email：service@sunjirtw.com
Line ID：@sjrtw
www.sunjirtw.com

NOTE

- **Install the earth leakage breaker (ELB) on the input side of the inverter.**
- **In the ⅄ connection earthed-neutral system, the sensitivity current is blunt against an earth (ground) fault in the inverter output side. Earthing (Grounding) must conform to the requirements of national and local safety regulations and electrical codes. (NEC section 250, IEC 536 class 1 and other applicable standards)**
- **When the breaker is installed on the output side of the inverter, it may be unnecessarily operated by harmonics even if the effective value is less than the rating.**
  In this case, do not install the breaker since the eddy current and hysteresis loss will increase, leading to temperature rise.
- **General products indicate the following models. ..... BV-C1, BC-V, NVB, NV-L, NV-G2N, NV-G3NA, NV-2F earth leakage relay (except NV-ZHA), NV with AA neutral wire open-phase protection**
  The other models are designed for harmonic and surge suppression ....NV-C/NV-S/MN series, NV30-FA, NV50-FA, BV-C2, earth leakage alarm breaker (NF-Z), NV-ZHA, NV-H

3.1.2 EMC measures

Some electromagnetic noises enter the inverter to malfunction it and others are radiated by the inverter to malfunction peripheral devices. Though the inverter is designed to have high immunity performance, it handles low-level signals, so it requires the following basic techniques. Also, since the inverter chops outputs at high carrier frequency, that could generate electromagnetic noises. If these electromagnetic noises cause peripheral devices to malfunction, EMI measures should be taken to suppress noises. These techniques differ slightly depending on EMI paths.

(1) Basic techniques

- Do not run the power cables (I/O cables) and signal cables of the inverter in parallel with each other and do not bundle them.
- Use twisted shield cables for the detector connecting and control signal cables and connect the sheathes of the shield cables to terminal SD.
- Earth (Ground) the inverter, motor, etc. at one point.

(2) Techniques to reduce electromagnetic noises that enter and malfunction the inverter (Immunity measures)

When devices that generate many electromagnetic noises (which use magnetic contactors, magnetic brakes, many relays, for example) are installed near the inverter and the inverter may be malfunctioned by electromagnetic noises, the following measures must be taken:

- Provide surge suppressors for devices that generate many electromagnetic noises to suppress electromagnetic noises.
- Fit data line filters *(page 41)* to signal cables.
- Earth (Ground) the shields of the detector connection and control signal cables with cable clamp metal.

(3) Techniques to reduce electromagnetic noises that are radiated by the inverter to malfunction peripheral devices (EMI measures)

Inverter-generated electromagnetic noises are largely classified into those radiated by the cables connected to the inverter and inverter main circuits (I/O), those electromagnetically and electrostatically induced to the signal cables of the peripheral devices close to the main circuit power supply, and those transmitted through the power supply cables.

上正科技有限公司
購買、維修、此手冊零組件
電話: 887-4[illegible]
Email: service@repairtw.com
網址: @zzzz
www.repairtw.com

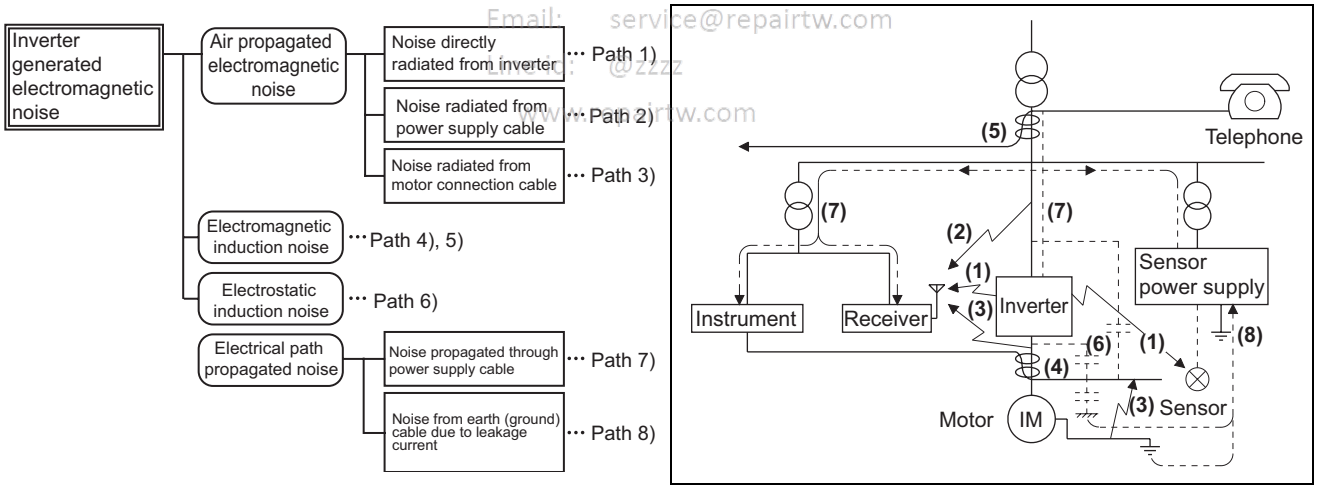

Propagation Path	Measures
(1)(2)(3)	When devices that handle low-level signals and are liable to malfunction due to electromagnetic noises, e.g. instruments, receivers and sensors, are contained in the enclosure that contains the inverter or when their signal cables are run near the inverter, the devices may be malfunctioned by air-propagated electromagnetic noises. The following measures must be taken: • Install easily affected devices as far away as possible from the inverter. • Run easily affected signal cables as far away as possible from the inverter and its I/O cables. • Do not run the signal cables and power cables (inverter I/O cables) in parallel with each other and do not bundle them. • Insert common mode filters into I/O and capacitors between the input lines to suppress cable-radiated noises. • Use shield cables as signal cables and power cables and run them in individual metal conduits to produce further effects.
(4)(5)(6)	When the signal cables are run in parallel with or bundled with the power cables, magnetic and static induction noises may be propagated to the signal cables to malfunction the devices and the following measures must be taken: • Install easily affected devices as far away as possible from the inverter. • Run easily affected signal cables as far away as possible from the I/O cables of the inverter. • Do not run the signal cables and power cables (inverter I/O cables) in parallel with each other and do not bundle them. • Use shield cables as signal cables and power cables and run them in individual metal conduits to produce further effects.
(7)	When the power supplies of the peripheral devices are connected to the power supply of the inverter in the same line, inverter-generated noises may flow back through the power supply cables to malfunction the devices and the following measures must be taken: • Install the common mode filter (FR-BLF, FR-BSF01) to the power cables (output cable) of the inverter.
(8)	When a closed loop circuit is formed by connecting the peripheral device wiring to the inverter, leakage currents may flow through the earth (ground) cable of the inverter to malfunction the device. In such a case, disconnection of the earth (ground) cable of the device may cause the device to operate properly.

●Data line filter

As immunity measures it may effective, provide a data line filter for the detector cable etc.

上正科技有限公司
購買、維修 此手冊零組件
電話： 037-466333
Email: [illegible]@zzzz[illegible].com
Line id: @zzzz
www.[illegible].com

●EMC measures

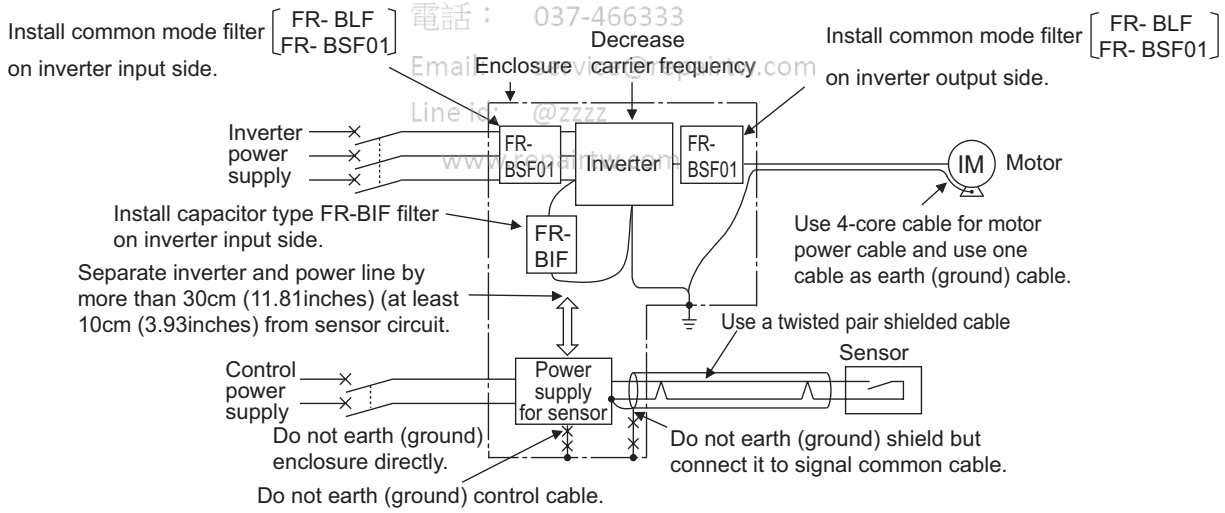

NOTE

- **For compliance with the EU EMC directive, refer to the *Installation Guideline*.**

3.1.3 Power supply harmonics

The inverter may generate power supply harmonics from its converter circuit to affect the power generator, power capacitor etc. Power supply harmonics are different from noise and leakage currents in source, frequency band and transmission path. Take the following countermeasure suppression techniques.

●The differences between harmonics and RF noises are indicated below:

Item	Harmonics	Noise
Frequency	Normally 40th to 50th degrees or less (up to 3kHz or less)	High frequency (several 10kHz to 1GHz order)
Environment	To-electric channel, power impedance	To-space, distance, wiring path
Quantitative understanding	Theoretical calculation possible	Random occurrence, quantitative grasping difficult
Generated amount	Nearly proportional to load capacity	Change with current variation ratio (larger as switching speed increases)
Affected equipment immunity	Specified in standard per equipment	Different depending on maker's equipment specifications
Suppression example	Provide reactor.	Increase distance.

●Suppression technique

The harmonic current generated from the inverter to the input side differs according to various conditions such as the wiring impedance, whether a reactor is used or not, and output frequency and output current on the load side.

For the output frequency and output current, we understand that they should be calculated in the conditions under the rated load at the maximum operating frequency.

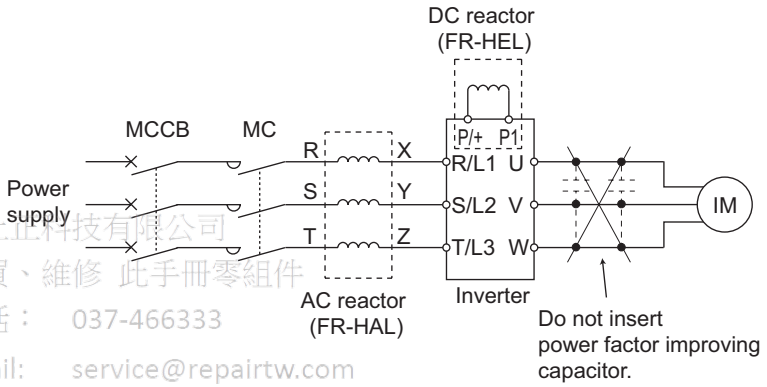

上正科技有限公司
購買、維修 此手冊零組件
電話： 037-466333
Email: service@repairtw.com
Line id: @zzzz
www.repairtw.com

NOTE

The power factor improving capacitor and surge suppressor on the inverter output side may be overheated or damaged by the harmonic components of the inverter output. Also, since an excessive current flows in the inverter to activate overcurrent protection, do not provide a capacitor and surge suppressor on the inverter output side when the motor is driven by the inverter. For power factor improvement, install a reactor on the inverter input side or in the DC circuit.

3.2 Installation of power factor improving reactor

When the inverter is connected near a large-capacity power transformer (500kVA or more) or when a power capacitor is to be switched over, an excessive peak current may flow in the power input circuit, damaging the converter circuit. To prevent this, always install an optional reactor (FR-HAL, FR-HEL).

● Three-phase power input

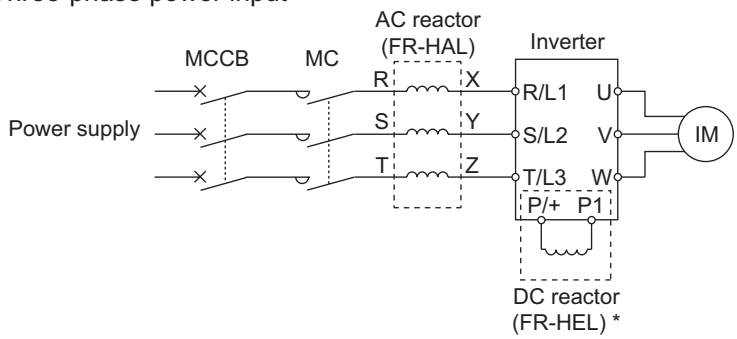

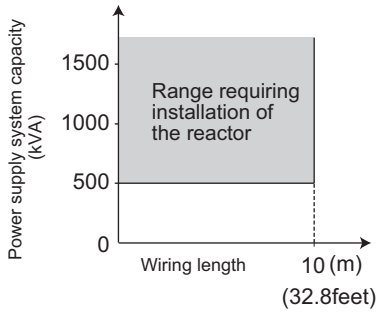

● Single-phase power input

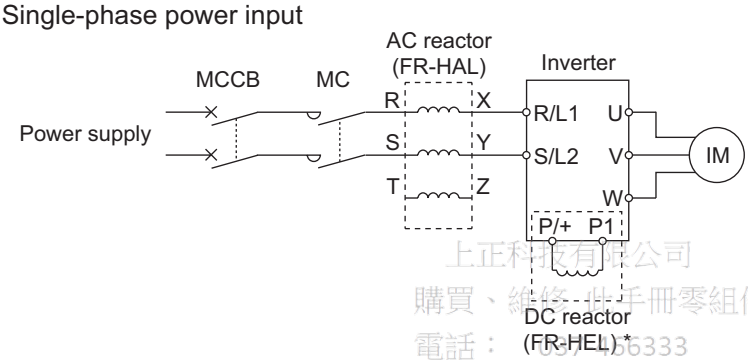

上正科技有限公司
購買、維修、出手冊零組件
電話： 03-356333
Email: service@repairtw.com
Line id: @zzzz
www.repairtw.com

* When connecting the FR-HEL, remove the jumper across terminals P/+ and P1.
The wiring length between the FR-HEL and inverter should be 5m (16.4feet) maximum and minimized.

REMARKS

- Use the same wire size as that of the power supply wire (R/L1, S/L2, T/L3). *(Refer to page 17)*

3.3 Power-off and magnetic contactor (MC)

(1) Inverter input side magnetic contactor (MC)

On the inverter input side, it is recommended to provide an MC for the following purposes.
(Refer to *page 4* for selection.)

1) To release the inverter from the power supply when the fault occurs or when the drive is not functioning (e.g. emergency stop operation). When cycle operation or heavy-duty operation is performed with an optional brake resistor connected, overheat and burnout of the discharging resistor can be prevented if a regenerative brake transistor is damaged due to insufficient heat capacity of the discharging resistor and excess regenerative brake duty.
2) To prevent any accident due to an automatic restart at restoration of power after an inverter stop made by a power failure
3) The control power supply for inverter is always running and consumes a little power. When stopping the inverter for an extended period of time, powering off the inverter will save power slightly.
4) To separate the inverter from the power supply to ensure safe maintenance and inspection work.
   The inverter's input side MC is used for the above purpose, select class JEM1038-AC3 MC for the inverter input side current when making an emergency stop during normal operation.

REMARKS

Since repeated inrush currents at power on will shorten the life of the converter circuit (switching life is about 1,000,000 times.), frequent starts and stops of the MC must be avoided. Turn on/off the inverter start controlling terminals (STF, STR) to run/stop the inverter.

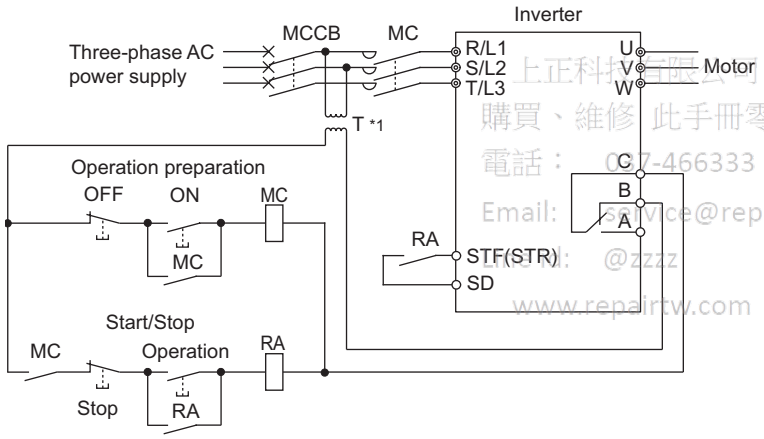

上正科技有限公司
購買、維修 此手冊零組件
電話： 07-466333
Email: service@repairtw.com
@zzzz
www.repairtw.com

● **Inverter start/stop circuit example**

As shown on the left, always use the start signal (ON or OFF across terminals STF or STR-SD) to make a start or stop.

*1 When the power supply is 400V class, install a step-down transformer.

(2) Handling of inverter output side magnetic contactor

Switch the magnetic contactor between the inverter and motor only when both the inverter and motor are at a stop. When the magnetic contactor is turned on while the inverter is operating, overcurrent protection of the inverter and such will activate. When an MC is provided for switching to the commercial power supply, for example, switch it on/off after the inverter and motor have stopped.

3.4 Inverter-driven 400V class motor

In the PWM type inverter, a surge voltage attributable to wiring constants is generated at the motor terminals. Especially for a 400V class motor, the surge voltage may deteriorate the insulation. When the 400V class motor is driven by the inverter, consider the following measures:

●Measures

It is recommended to take either of the following measures:

(1) Rectifying the motor insulation and limiting the PWM carrier frequency according to the wiring length

For the 400V class motor, use an insulation-enhanced motor.
Specifically,

1) Specify the "400V class inverter-driven insulation-enhanced motor".
2) For the dedicated motor such as the constant-torque motor and low-vibration motor, use the "inverter-driven, dedicated motor".
3) Set *Pr. 72 PWM frequency selection* as indicated below according to the wiring length

	Wiring Length		
	50m (164.04feet) or less	**50m to 100m (164.04feet to 328.09feet)**	**exceeding 100m (328.09feet)**
Pr. 72 PWM frequency selection	15 (14.5kHz) or less	8 (8kHz) or less	2 (2kHz) or less

(2) Suppressing the surge voltage on the inverter side

Connect the surge voltage suppression filter (FR-ASF-H/FR-BMF-H) on the inverter output side.

上豪科技有限公司
購買、維修 此手冊零組件
電話： 037-466333
Email: service@zzzz.com.tw
Line id: @zzzz
www.repairtw.com

NOTE

- **For details of *Pr. 72 PWM frequency selection*, *refer to page 148*.**
- **For explanation of surge voltage suppression filter (FR-ASF-H/FR-BMF-H), refer to the manual of each option**

3.5 Precautions for use of the inverter

The FR-D700 series is a highly reliable product, but incorrect peripheral circuit making or operation/handling method may shorten the product life or damage the product.
Before starting operation, always recheck the following items.

(1) Use crimping terminals with insulation sleeve to wire the power supply and motor.

(2) Application of power to the output terminals (U, V, W) of the inverter will damage the inverter. Never perform such wiring.

(3) After wiring, wire offcuts must not be left in the inverter.
Wire offcuts can cause an alarm, failure or malfunction. Always keep the inverter clean.
When drilling mounting holes in an enclosure etc., take care not to allow chips and other foreign matter to enter the inverter.

(4) Use cables of the size to make a voltage drop 2% maximum.
If the wiring distance is long between the inverter and motor, a main circuit cable voltage drop will cause the motor torque to decrease especially at the output of a low frequency.
Refer to *page 17* for the recommended wire sizes.

(5) The overall wiring length should be 500m (1640.42feet) maximum.
Especially for long distance wiring, the fast-response current limit function may decrease or the equipment connected to the secondary side may malfunction or become faulty under the influence of a charging current due to the stray capacity of the wiring. Therefore, note the overall wiring length. (*Refer to page 19)*

上正科技有限公司
購買、維修 此手冊零組件
電話： 037-406333
Email: service@repairtw.com
Line id: @zzzz
www.repairtw.com

(6) Electromagnetic wave interference
The input/output (main circuit) of the inverter includes high frequency components, which may interfere with the communication devices (such as AM radios) used near the inverter. In this case, install the FR-BIF optional capacitor type filter (for use in the input side only) or FR-BSF01 or FR-BLF common mode filter to minimize interference.

(7) Do not install a power factor correction capacitor, surge suppressor or capacitor type filter on the inverter output side.
This will cause the inverter to trip or the capacitor and surge suppressor to be damaged. If any of the above devices are connected, immediately remove them. (When using capacitor type filter (FR-BIF) for single-phase power supply specification, make sure of secure insulation of T/L3-phase, and connect to the input side of the inverter.)

(8) For some short time after the power is switched off, a high voltage remains in the smoothing capacitor. When accessing the inverter for inspection, wait for at least 10 minutes after the power supply has been switched off, and then make sure that the voltage across the main circuit terminals P/+ and N/- of the inverter is not more than 30VDC using a tester, etc. The capacitor is charged with high voltage for some time after power off and it is dangerous.

(9) A short circuit or earth (ground) fault on the inverter output side may damage the inverter modules.
- Fully check the insulation resistance of the circuit prior to inverter operation since repeated short circuits caused by peripheral circuit inadequacy or an earth (ground) fault caused by wiring inadequacy or reduced motor insulation resistance may damage the inverter modules.
- Fully check the to-earth (ground) insulation and phase to phase insulation of the inverter output side before power-on. Especially for an old motor or use in hostile atmosphere, securely check the motor insulation resistance etc.

(10) Do not use the inverter input side magnetic contactor to start/stop the inverter.
Always use the start signal (turn on/off STF and STR signals) to start/stop the inverter. (*Refer to page 44)*

(11) Across P/+ and PR terminals, connect only an external regenerative brake discharging resistor.
Do not connect a mechanical brake.
The brake resistor can not be connected to the FR-D720-008 and 014 and FR-D720S-008 and 014. Never short between terminals P/+ and PR.

(12) Do not apply a voltage higher than the permissible voltage to the inverter I/O signal circuits.
Application of a voltage higher than the permissible voltage to the inverter I/O signal circuits or opposite polarity may damage the I/O devices. Especially check the wiring to prevent the speed setting potentiometer from being connected incorrectly to short terminals 10-5.

(13) Provide electrical and mechanical interlocks for MC1 and MC2 which are used for bypass operation. When the wiring is incorrect and if there is a bypass operation circuit as shown right, the inverter will be damaged due to arcs generated at the time of switch-over or chattering caused by a sequence error.

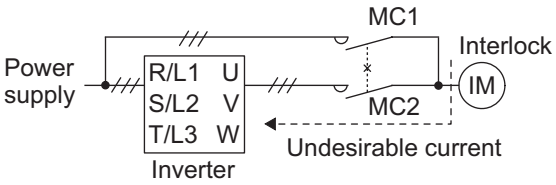

(14) If the machine must not be restarted when power is restored after a power failure, provide a magnetic contactor in the inverter's input side and also make up a sequence which will not switch on the start signal.
If the start signal (start switch) remains on after a power failure, the inverter will automatically restart as soon as the power is restored.

(15) Instructions for overload operation
When performing operation of frequent start/stop of the inverter, rise/fall in the temperature of the transistor element of the inverter will repeat due to a repeated flow of large current, shortening the life from thermal fatigue. Since thermal fatigue is related to the amount of current, the life can be increased by reducing current at locked condition, starting current, etc. Decreasing current may increase the life. However, decreasing current will result in insufficient torque and the inverter may not start. Therefore, choose the inverter which has enough allowance for current (up to 2 rank larger in capacity).

上正科技有限公司
電話： 037-466333
Email: service@repairtw.com
www.repairtw.com

(16) Make sure that the specifications and rating match the system requirements.

(17) When the motor speed is unstable, due to change in the frequency setting signal caused by electromagnetic noises from the inverter, take the following measures while applying the motor speed by the analog signal.
- Do not run the signal cables and power cables (inverter I/O cables) in parallel with each other and do not bundle them.
- Run signal cables as far away as possible from power cables (inverter I/O cables).
- Use shield cables as signal cables.
- Install a ferrite core on the signal cable (Example: ZCAT3035-1330 TDK).

3.6 Failsafe of the system which uses the inverter

When a fault occurs, the inverter trips to output a fault signal. However, a fault output signal may not be output at an inverter fault occurrence when the detection circuit or output circuit fails, etc. Although Mitsubishi assures best quality products, provide an interlock which uses inverter status output signals to prevent accidents such as damage to machine when the inverter fails for some reason and at the same time consider the system configuration where failsafe from outside the inverter, without using the inverter, is enabled even if the inverter fails.

(1) Interlock method which uses the inverter status output signals
By combining the inverter status output signals to provide an interlock as shown below, an inverter alarm can be detected.

No	Interlock Method	Check Method	Used Signals	Refer to Page
1)	Inverter protective function operation	Operation check of an alarm contact Circuit error detection by negative logic	Fault output signal (ALM signal)	*122*
2)	Inverter operating status	Operation ready signal check	Operation ready signal (RY signal)	*121*
3)	Inverter running status	Logic check of the start signal and running signal	Start signal (STF signal, STR signal) Running signal (RUN signal)	*117, 121*
4)	Inverter running status	Logic check of the start signal and output current	Start signal (STF signal, STR signal) Output current detection signal (Y12 signal)	*117, 124*

1) Check by the inverter fault output signal
When the fault occurs and the inverter trips, the fault output signal (ALM signal) is output (ALM signal is assigned to terminal ABC in the initial setting).
Check that the inverter functions properly.
In addition, negative logic can be set (on when the inverter is normal, off when the fault occurs).

E.T.K科技有限公司
購買、維修 此手冊零件
電話： 037-466333
Email: service@repairtw.com
Line id: @zzzz
www.repairtw.com

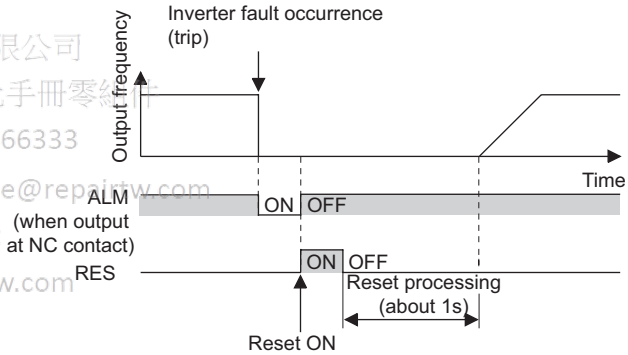

2) Checking the inverter operating status by the inverter operation ready completion signal
Operation ready signal (RY signal) is output when the inverter power is on and the inverter becomes operative.
Check if the RY signal is output after powering on the inverter.

3) Checking the inverter operating status by the start signal input to the inverter and inverter running signal.
The inverter running signal (RUN signal) is output when the inverter is running (RUN signal is assigned to terminal RUN in the initial setting).
Check if RUN signal is output when inputting the start signal to the inverter (forward signal is STF signal and reverse signal is STR signal). For logic check, note that RUN signal is output for the period from the inverter decelerates until output to the motor is stopped, configure a sequence considering the inverter deceleration time.

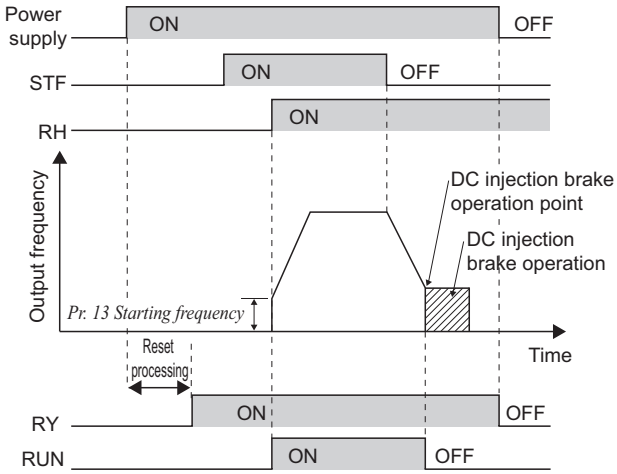

4) Checking the motor operating status by the start signal input to the inverter and inverter output current detection signal.
The output current detection signal (Y12 signal) is output when the inverter operates and currents flows in the motor. Check if Y12 signal is output when inputting the start signal to the inverter (forward signal is STF signal and reverse signal is STR signal). Note that the current level at which Y12 signal is output is set to 150% of the inverter rated current in the initial setting, it is necessary to adjust the level to around 20% using no load current of the motor as reference with *Pr.150 Output current detection level*.
For logic check, as same as the inverter running signal (RUN signal), the inverter outputs for the period from the inverter decelerates until output to the motor is stopped, configure a sequence considering the inverter deceleration time.

Output Signal	*Pr. 190, Pr. 192* Setting	
	Positive logic	Negative logic
ALM	99	199
RY	11	111
RUN	0	100
Y12	12	112

- When using various signals, assign functions to *Pr.190, Pr.192 (output terminal function selection)* referring to the table on the left.

NOTE

- **Changing the terminal assignment using *Pr. 190, Pr. 192 (output terminal function selection)* may affect the other functions. Make setting after confirming the function of each terminal.**

(2) Backup method outside the inverter
Even if the interlock is provided by the inverter status signal, enough failsafe is not ensured depending on the failure status of the inverter itself. For example, when the inverter CPU fails, even if the interlock is provided using the inverter fault signal, start signal and RUN signal, there is a case where a fault signal is not output and RUN signal is kept output even if an inverter fault occurs.
Provide a speed detector to detect the motor speed and current detector to detect the motor current and consider the backup system such as checking up as below according to the level of importance of the system.

上正科技有限公司
電話： 037-466333
Line Id: @zzzz
www.repairtw.com

1) Start signal and actual operation check
Check the motor running and motor current while the start signal is input to the inverter by comparing the start signal to the inverter and detected speed of the speed detector or detected current of the current detector. Note that the motor current runs as the motor is running for the period until the motor stops since the inverter starts decelerating even if the start signal turns off. For the logic check, configure a sequence considering the inverter deceleration time. In addition, it is recommended to check the three-phase current when using the current detector.

2) Command speed and actual operation check
Check if there is no gap between the actual speed and commanded speed by comparing the inverter speed command and detected speed of the speed detector.

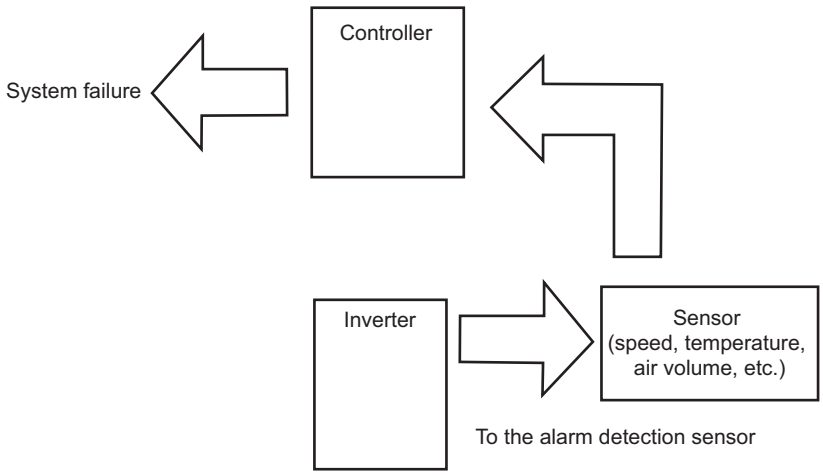

MEMO

上正科技有限公司
購買、維修 此手冊零組件
電話： 037-466333
Email: service@repairtw.com
Line id: @zzzz
www.repairtw.com

4 PARAMETERS

This chapter explains the "PARAMETERS" for use of this product.
Always read the instructions before using the equipment.

上正科技有限公司
購買、維修、出售原零組件
電話： 027-466333
Email: service@repairtw.com
Line id: @zzzz
www.repairtw.com

The abbreviations in the explanations below are as follows:

V/F .....V/F control

GP MFVC .....General-purpose magnetic-flux vector control

(Parameters without any indication are valid for both control)

4.1 Operation panel

4.1.1 Names and functions of the operation panel

The operation panel cannot be removed from the inverter.

Operation mode indication
PU: Lit to indicate PU operation mode.
EXT: Lit to indicate external operation mode.
NET: Lit to indicate network operation mode.
PU, EXT: Lit to indicate external/PU combined operation mode 1, 2.

Unit indication
Hz: Lit to indicate frequency.
(Flickers when the set frequency monitor is displayed.)
A: Lit to indicate current.
(Both "Hz" and "A" turn off when other than the above is displayed.)

Monitor (4-digit LED)
Shows the frequency, parameter number, etc.

Setting dial
(Setting dial: Mitsubishi inverter dial)
Used to change the frequency setting and parameter values.
Press to display the following.
- Displays the set frequency in the monitor mode
- Present set value is displayed during calibration
- Displays the order in the faults history mode

Mode switchover
Used to change each setting mode.
Pressing (PU/EXT) simultaneously changes the operation mode. *(Refer to page 54)*
Pressing for a while (2s) can lock operation. *(Refer to page 238)*

Determination of each setting
If pressed during operation, monitor changes as below;

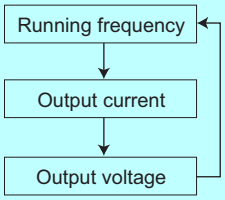

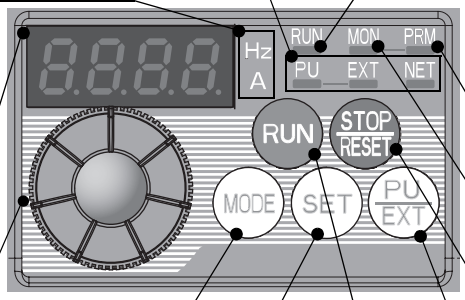

上正科技有限公司
購買、維修 此手冊零組件
電話： 037-466333
Email: service@repairtw.com
Line id: @zzzz
www.repairtw.com

Operating status display
Lit or flicker during inverter operation. *
* On: Indicates that forward rotation operation is being performed.
Slow flickering (1.4s cycle): Reverse rotation operation
Fast flickering (0.2s cycle):
When (RUN) was pressed or the start command was given, but the operation can not be made.
- When the frequency command is less than the starting frequency.
- When the MRS signal is input.

Parameter setting mode indication
Lit to indicate parameter setting mode.

Monitor indication
Lit to indicate monitoring mode.

Stop operation
Used to stop Run command.
Fault can be reset when protective function is activated (fault).

Operation mode switchover
Used to switch between the PU and external operation mode.
When using the external operation mode (operation using a separately connected frequency setting potentiometer and start signal), press this key to light up the EXT indication.
(Press (MODE) simultaneously (0.5s) *(Refer to page 54)*, or change *Pr. 79* setting to change to combined mode .)
PU: PU operation mode
EXT: External operation mode
Cancels PU stop also.

Start command
The rotation direction can be selected by setting *Pr. 40*.

4.1.2 Basic operation (factory setting)

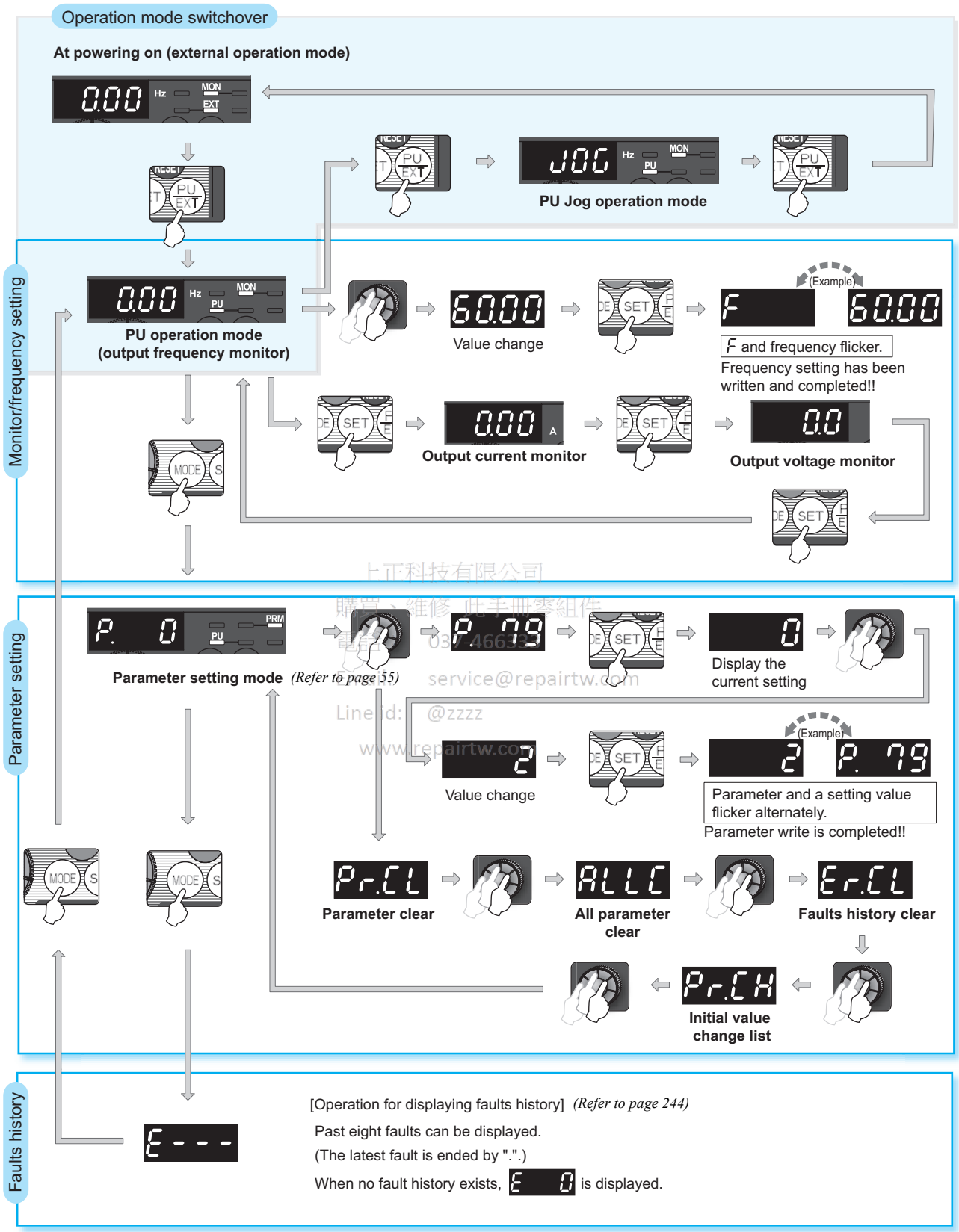

上正科技有限公司
購買、維修、此手冊零組件
電話: 03-4663
service@repairtw.com
Line id: @zzzz
www.repairtw.com

4.1.3 Easy operation mode setting (easy setting mode)

Setting of *Pr. 79 Operation mode selection* according to combination of the start command and speed command can be easily made.

Changing example: Start command: external (STF/STR), frequency command: operate with

Operation | **Display**

1. Screen at powering on
   The monitor display appears.

2. Press PU/EXT and MODE for 0.5s.

3. Turn until 79 - 3 appears.
   (refer to the table below for other settings)

Operation Panel Indication	Operation Method	
	Start command	Frequency command
Flickering 79 - 1 PRM PU Flickering	RUN	
Flickering 79 - 2 PRM EXT Flickering	External (STF, STR)	Analog voltage input
Flickering 79 - 3 PRM PU EXT Flickering	External (STF, STR)	
Flickering 79 - 4 PRM PU EXT Flickering	RUN	Analog voltage input

高電科技有限公司
專業維修 此為測試組件
電話: 037-466333
Email: service@repairtw.com
網址: www.repairtw.com

4. Press SET to set.

Flicker ··· Parameter setting complete!!
The monitor display appears after 3s.

REMARKS

? Er 1 is displayed ... Why?

☞ Parameter write is disabled with "1" set in *Pr. 77*.

? Er2 is displayed ... Why?

☞ Setting can not be made during operation. Turn the start switch (RUN, STF or STR) off.

- Press MODE before pressing SET to return to the monitor display without setting. In this case, the mode changes to external operation mode when performed in the PU operation mode (PU JOG operation mode) and to PU operation mode when performed in the external operation mode.
- Reset can be made with STOP/RESET.
- The priorities of the frequency commands when *Pr. 79* = "3" are "Multi-speed operation (RL/RM/RH/REX) > PID control (X14) > terminal 4 analog input (AU) > digital input from the operation panel".

4.1.4 Change the parameter setting value

Changing example	Change the *Pr. 1 Maximum frequency* setting.

Operation — **Display**

1. Screen at powering on
   The monitor display appears.

2. Press (PU/EXT) to choose the PU operation mode.

PU indication is lit.

3. Press (MODE) to choose the parameter setting mode.

PRM indication is lit.

(The parameter number read previously appears.)

4. Turn (◎) until P. 1 (*Pr. 1*) appears.

5. Press (SET) to read the present set value.
   " 120.0 "(120.0Hz (initial value)) appears.

6. Turn (◎) to change the set value to
   "60.00" (60.00Hz).

7. Press (SET) to set.

Flicker...Parameter setting complete!!

上正科技有限公司
購買、維修 此冊零組件
電話： 037-466333
Email: service@repairtw.com
Line ID: @2222
www.repairtw.com

- Turn (◎) to read another parameter.
- Press (SET) to show the setting again.
- Press (SET) twice to show the next parameter.
- Press (MODE) twice to return to frequency monitor.

REMARKS

? Er 1 to Er 4 is displayed...Why?

☞ Er 1 appears..... Write disable error
Er 2 appears..... Write error during operation
Er 3 appears..... Calibration error
Er 4 appears..... Mode designation error

(For details, refer to *page 250*.)

- The number of digits displayed on the operation panel is four. Only the upper four digits of values can be displayed and set. If the values to be displayed have five digits or more including decimal places, the fifth or later numerals can not be displayed nor set.
  (Example) For *Pr. 1*
  When 60Hz is set, 60.00 is displayed.
  When 120Hz is set, 120.0 is displayed and second decimal place is not displayed nor set.

4.1.5 Setting dial push

Push the setting dial (◎) to display the set frequency* currently set.

* Appears when PU operation mode or external/PU combined operation mode 1 is selected (*Pr. 79* ="3").

4.2 Parameter list

4.2.1 Parameter list

For simple variable-speed operation of the inverter, the initial setting of the parameters may be used as they are. Set the necessary parameters to meet the load and operational specifications. Parameter setting, change and check can be made from the operation panel. For details of parameters, refer to the instruction manual.

REMARKS

- ◎ indicates simple mode parameters.
- The parameters surrounded by a black border in the table allow its setting to be changed during operation even if "0" (initial value) is set in *Pr. 77 Parameter write selection*.

上品科技有限公司
購買、維修 此手冊零組件
電話： 037-466333
Email: service@repairtw.com
Line id: @zzzz
www.repairtw.com

Function	Parameter	Name	Setting Range	Minimum Setting Increments	Initial Value	Refer to Page	Customer Setting
Basic functions	◎ 0	Torque boost	0 to 30%	0.1%	6/4/3% *1	73	
	◎ 1	Maximum frequency	0 to 120Hz	0.01Hz	120Hz	83	
	◎ 2	Minimum frequency	0 to 120Hz	0.01Hz	0Hz	83	
	◎ 3	Base frequency	0 to 400Hz	0.01Hz	60Hz	85	
	◎ 4	Multi-speed setting (high speed)	0 to 400Hz	0.01Hz	60Hz	89	
	◎ 5	Multi-speed setting (middle speed)	0 to 400Hz	0.01Hz	30Hz	89	
	◎ 6	Multi-speed setting (low speed)	0 to 400Hz	0.01Hz	10Hz	89	
	◎ 7	Acceleration time	0 to 3600s	0.1s	5/10s *2	96	
	◎ 8	Deceleration time	0 to 3600s	0.1s	5/10s *2	96	
	◎ 9	Electronic thermal O/L relay	0 to 500A	0.01A	Rated inverter current	100	
DC injection brake	10	DC injection brake operation frequency	0 to 120Hz	0.01Hz	3Hz	109	
	11	DC injection brake operation time	0 to 10s	0.1s	0.5s	109	
	12	DC injection brake operation voltage	0 to 30%	0.1%	6/4% *3	109	
—	13	Starting frequency	0 to 60Hz	0.01Hz	0.5Hz	98	
—	14	Load pattern selection	0 to 3	1	0	87	
JOG operation	15	Jog frequency	0 to 400Hz	0.01Hz	5Hz	91	
	16	Jog acceleration/deceleration time	0 to 3600s	0.1s	0.5s	91	
—	17	MRS input selection	0, 2, 4	1	0	115	
—	18	High speed maximum frequency	120 to 400Hz	0.01Hz	120Hz	83	
—	19	Base frequency voltage	0 to 1000V, 8888, 9999	0.1V	9999	85	
Acceleration/deceleration time	20	Acceleration/deceleration reference frequency	1 to 400Hz	0.01Hz	60Hz	96	
Stall prevention	22	Stall prevention operation level	0 to 200%	0.1%	150%	79	
	23	Stall prevention operation level compensation factor at double speed	0 to 200%, 9999	0.1%	9999	79	
Multi-speed setting	24	Multi-speed setting (speed 4)	0 to 400Hz, 9999	0.01Hz	9999	89	
	25	Multi-speed setting (speed 5)	0 to 400Hz, 9999	0.01Hz	9999	89	
	26	Multi-speed setting (speed 6)	0 to 400Hz, 9999	0.01Hz	9999	89	
	27	Multi-speed setting (speed 7)	0 to 400Hz, 9999	0.01Hz	9999	89	
—	29	Acceleration/deceleration pattern selection	0, 1, 2	1	0	99	

- These instruction codes are used for parameter read and write by using Mitsubishi inverter protocol with the RS-485 communication. (*Refer to page 183* for RS-485 communication)
- "○" indicates valid and "×" indicates invalid of "control mode-based correspondence table", "parameter copy", "parameter clear", and "all parameter clear".

Parameter	Remarks	Instruction Code			Control Mode-based Correspondence Table		Parameter		
		Read	Write	Extended	V/F	GP MFVC	Copy	Clear	All clear
◎ 0		00	80	0	○	×	○	○	○
◎ 1		01	81	0	○	○	○	○	○
◎ 2		02	82	0	○	○	○	○	○
◎ 3		03	83	0	○	×	○	○	○
◎ 4		04	84	0	○	○	○	○	○
◎ 5		05	85	0	○	○	○	○	○
◎ 6		06	86	0	○	○	○	○	○
◎ 7		07	87	0	○	○	○	○	○
◎ 8		08	88	0	○	○	○	○	○
◎ 9		09	89	0	○	○	○	○	○
10		0A	8A	0	○	○	○	○	○
11		0B	8B	0	○	○	○	○	○
12		0C	8C	0	○	○	○	○	○
13		0D	8D	0	○	○	○	○	○
14		0E	8E	0	○	×	○	○	○
15		0F	8F	0	○	○	○	○	○
16		10	90	0	○	○	○	○	○
17		11	91	0	○	○	○	○	○
18		12	92	0	○	○	○	○	○
19		13	93	0	○	×	○	○	○
20		14	94	0	○	○	○	○	○
22		16	96	0	○	○	○	○	○
23		17	97	0	○	○	○	○	○
24		18	98	0	○	○	○	○	○
25		19	99	0	○	○	○	○	○
26		1A	9A	0	○	○	○	○	○
27		1B	9B	0	○	○	○	○	○
29		1D	9D	0	○	○	○	○	○

Function	Parameter	Name	Setting Range	Minimum Setting Increments	Initial Value	Refer to Page	Customer Setting
—	30	Regenerative function selection	0, 1, 2	1	0	110, 136	
Frequency jump	31	Frequency jump 1A	0 to 400Hz, 9999	0.01Hz	9999	84	
	32	Frequency jump 1B	0 to 400Hz, 9999	0.01Hz	9999	84	
	33	Frequency jump 2A	0 to 400Hz, 9999	0.01Hz	9999	84	
	34	Frequency jump 2B	0 to 400Hz, 9999	0.01Hz	9999	84	
	35	Frequency jump 3A	0 to 400Hz, 9999	0.01Hz	9999	84	
	36	Frequency jump 3B	0 to 400Hz, 9999	0.01Hz	9999	84	
—	37	Speed display	0, 0.01 to 9998	0.001	0	127	
—	40	RUN key rotation direction selection	0, 1	1	0	237	
Frequency detection	41	Up-to-frequency sensitivity	0 to 100%	0.1%	10%	123	
	42	Output frequency detection	0 to 400Hz	0.01Hz	6Hz	123	
	43	Output frequency detection for reverse rotation	0 to 400Hz, 9999	0.01Hz	9999	123	
Second functions	44	Second acceleration/deceleration time	0 to 3600s	0.1s	5/10s *2	96, 220	
	45	Second deceleration time	0 to 3600s, 9999	0.1s	9999	96, 220	
	46	Second torque boost	0 to 30%, 9999	0.1%	9999	73	
	47	Second V/F (base frequency)	0 to 400Hz, 9999	0.01Hz	9999	85	
	48	Second stall prevention operation current	0 to 200%, 9999	0.1%	9999	79	
	51	Second electronic thermal O/L relay	0 to 500A, 9999	0.01A	9999	100	
Monitor functions	52	DU/PU main display data selection	0, 5, 8 to 12, 14, 20, 23 to 25, 52 to 55, 61, 62, 64, 100	1	0	128	
	55	Frequency monitoring reference	0 to 400Hz	0.01Hz	60Hz	133	
	56	Current monitoring reference	0 to 500A	0.01A	Rated inverter current	133	
Automatic restart functions	57	Restart coasting time	0, 0.1 to 5s, 9999	0.1s	9999	136	
	58	Restart cushion time	0 to 60s	0.1s	1s	136	
—	59	Remote function selection	0, 1, 2, 3	1	0	93	
—	60	Energy saving control selection	0, 9	1	0	147	
—	65	Retry selection	0 to 5	1	0	144	
—	66	Stall prevention operation reduction starting frequency	0 to 400Hz	0.01Hz	60Hz	79	
Retry	67	Number of retries at fault occurrence	0 to 10, 101 to 110	1	0	144	
	68	Retry waiting time	0.1 to 600s	0.1s	1s	144	
	69	Retry count display erase	0	1	0	144	
—	70	Special regenerative brake duty	0 to 30%	0.1%	0%	110	
—	71	Applied motor	0, 1, 3, 13, 23, 40, 43, 50, 53	1	0	75, 103, 105,	
—	72	PWM frequency selection	0 to 15	1	1	148	
—	73	Analog input selection	0, 1, 10, 11	1	1	150	
—	74	Input filter time constant	0 to 8	1	1	152	
—	75	Reset selection/disconnected PU detection/PU stop selection	0 to 3, 14 to 17	1	14	158	
—	77	Parameter write selection	0, 1, 2	1	0	161	
—	78	Reverse rotation prevention selection	0, 1, 2	1	0	162	
—	◎ 79	Operation mode selection	0, 1, 2, 3, 4, 6, 7	1	0	165, 175	

上海科技有限公司
購買、維修、批發、零售、租賃
電話：0374466333
Email：service@repairtw.com
Line id：@zzzz
www.repairtw.com

Parameter	Remarks	Instruction Code			Control Mode-based Correspondence Table		Parameter		
		Read	Write	Extended	V/F	GP MFVC	Copy	Clear	All clear
30		1E	9E	0	○	○	○	○	○
31		1F	9F	0	○	○	○	○	○
32		20	A0	0	○	○	○	○	○
33		21	A1	0	○	○	○	○	○
34		22	A2	0	○	○	○	○	○
35		23	A3	0	○	○	○	○	○
36		24	A4	0	○	○	○	○	○
37		25	A5	0	○	○	○	○	○
40		28	A8	0	○	○	○	○	○
41		29	A9	0	○	○	○	○	○
42		2A	AA	0	○	○	○	○	○
43		2B	AB	0	○	○	○	○	○
44		2C	AC	0	○	○	○	○	○
45		2D	AD	0	○	○	○	○	○
46		2E	AE	0	○	×	○	○	○
47		2F	AF	0	○	×	○	○	○
48		30	B0	0	○	○	○	○	○
51		33	B3	0	○	○	○	○	○
52		34	B4	0	○	○	○	○	○
55		37	B7	0	○	○	○	○	○
56		38	B8	0	○	○	○	○	○
57		39	B9	0	○	○	○	○	○
58		3A	BA	0	○	○	○	○	○
59		3B	BB	0	○	○	○	○	○
60		3C	BC	0	○	×	○	○	○
65		41	C1	0	○	○	○	○	○
66		42	C2	0	○	○	○	○	○
67		43	C3	0	○	○	○	○	○
68		44	C4	0	○	○	○	○	○
69		45	C5	0	○	○	○	○	○
70		46	C6	0	○	○	○	○	○
71		47	C7	0	○	○	○	○	○
72		48	C8	0	○	○	○	○	○
73		49	C9	0	○	○	○	×	○
74		4A	CA	0	○	○	○	○	○
75		4B	CB	0	○	○	○	×	×
77		4D	CD *4	0	○	○	○	○	○
78		4E	CE	0	○	○	○	○	○
◎ 79		4F	CF *4	0	○	○	○	○	○

Function	Parameter	Name	Setting Range	Minimum Setting Increments	Initial Value	Refer to Page	Customer Setting
Motor constants	80	Motor capacity	0.1 to 7.5kW, 9999	0.01kW	9999	75, 105	
	82	Motor excitation current	0 to 500A, 9999	0.01A	9999	105	
	83	Rated motor voltage	0 to 1000V	0.1V	200V/400V *5	105	
	84	Rated motor frequency	10 to 120Hz	0.01Hz	60Hz	105	
	90	Motor constant (R1)	0 to 50Ω , 9999	0.001Ω	9999	105	
	96	Auto tuning setting/status	0, 11, 21	1	0	105, 136	
PU connector communication	117	PU communication station number	0 to 31 (0 to 247)	1	0	183, 200	
	118	PU communication speed	48, 96, 192, 384	1	192	183, 200	
	119	PU communication stop bit length	0, 1, 10, 11	1	1	183	
	120	PU communication parity check	0, 1, 2	1	2	183, 200	
	121	Number of PU communication retries	0 to 10, 9999	1	1	184	
	122	PU communication check time interval	0, 0.1 to 999.8s, 9999	0.1s	0	184, 200	
	123	PU communication waiting time setting	0 to 150ms, 9999	1	9999	183	
	124	PU communication CR/LF selection	0, 1, 2	1	1	183	
—	◎ 125	Terminal 2 frequency setting gain frequency	0 to 400Hz	0.01Hz	60Hz	153	
—	◎126	Terminal 4 frequency setting gain frequency	0 to 400Hz	0.01Hz	60Hz	153	
PID operation	127	PID control automatic switchover frequency	0 to 400Hz, 9999	0.01Hz	9999	212	
	128	PID action selection	0, 20, 21, 40 to 43	1	0	212, 220	
	129	PID proportional band	0.1 to 1000%, 9999	0.1%	100%	212, 220	
	130	PID integral time	0.1 to 3600s, 9999	0.1s	1s	212, 220	
	131	PID upper limit	0 to 100%, 9999	0.1%	9999	212, 220	
	132	PID lower limit	0 to 100%, 9999	0.1%	9999	212, 220	
	133	PID action set point	0 to 100%, 9999	0.01%	9999	212, 220	
	134	PID differential time	0.01 to 10s, 9999	0.01s	9999	212, 220	
PU	145	PU display language selection	0 to 7	1	1	237	
—	146	Parameter for manufacturer setting. Do not set.					
Current detection	150	Output current detection level	0 to 200%	0.1%	150%	124	
	151	Output current detection signal delay time	0 to 10s	0.1s	0s	124	
	152	Zero current detection level	0 to 200%	0.1%	5%	124	
	153	Zero current detection time	0 to 1s	0.01s	0.5s	124	
—	156	Stall prevention operation selection	0 to 31, 100, 101	1	0	79	
—	157	OL signal output timer	0 to 25s, 9999	0.1s	0s	79	
—	158	AM terminal function selection	1 to 3, 5, 8 to 12, 14, 21, 24, 52, 53, 61, 62	1	1	128	
—	◎ 160	Extended function display selection	0, 9999	1	0	162	
—	161	Frequency setting/key lock operation selection	0, 1, 10, 11	1	0	238	
Automatic restart functions	162	Automatic restart after instantaneous power failure selection	0, 1, 10, 11	1	1	136	
	165	Stall prevention operation level for restart	0 to 200%	0.1%	150%	136	

上正科技有限公司
購買、維修 比手畫零組件
電話：037466333
Email: service@repairtw.com
Line id: @zzzz
www.repairtw.com

Parameter	Remarks	Instruction Code			Control Mode-based Correspondence Table		Parameter		
		Read	Write	Extended	V/F	GP MFVC	Copy	Clear	All clear
80		50	D0	0	×	○	○	○	○
82		52	D2	0	×	○	○	×	○
83		53	D3	0	×	○	○	○	○
84		54	D4	0	×	○	○	○	○
90		5A	DA	0	○	○	○	×	○
96		60	E0	0	○	○	○	×	○
117		11	91	1	○	○	○	○ *7	○ *7
118		12	92	1	○	○	○	○ *7	○ *7
119		13	93	1	○	○	○	○ *7	○ *7
120		14	94	1	○	○	○	○ *7	○ *7
121		15	95	1	○	○	○	○ *7	○ *7
122		16	96	1	○	○	○	○ *7	○ *7
123		17	97	1	○	○	○	○ *7	○ *7
124		18	98	1	○	○	○	○ *7	○ *7
◎ 125		19	99	1	○	○	○	×	○
◎ 126		1A	9A	1	○	○	○	×	○
127		1B	9B	1	○	○	○	○	○
128		1C	9C	1	○	○	○	○	○
129		1D	9D	1	○	○	○	○	○
130		1E	9E	1	○	○	○	○	○
131		1F	9F	1	○	○	○	○	○
132		20	A0	1	○	○	○	○	○
133		21	A1	1	○	○	○	○	○
134		22	A2	1	○	○	○	○	○
145		2D	AD	1	○	○	○	×	×
146	Parameter for manufacturer setting. Do not set.								
150		32	B2	1	○	○	○	○	○
151		33	B3	1	○	○	○	○	○
152		34	B4	1	○	○	○	○	○
153		35	B5	1	○	○	○	○	○
156		38	B8	1	○	○	○	○	○
157		39	B9	1	○	○	○	○	○
158		3A	BA	1	○	○	○	○	○
◎ 160		00	80	2	○	○	○	○	○
161		01	81	2	○	○	○	×	○
162		02	82	2	○	○	○	○	○
165		05	85	2	○	○	○	○	○

Function	Parameter	Name	Setting Range	Minimum Setting Increments	Initial Value	Refer to Page	Customer Setting
Current detection	166	Output current detection signal retention time	0 to 10s, 9999	0.1s	0.1s	124	
	167	Output current detection operation selection	0, 1	1	0	124	
—	168	Parameter for manufacturer setting. Do not set.					
—	169						
Cumulative monitor clear	170	Watt-hour meter clear	0, 10, 9999	1	9999	128	
	171	Operation hour meter clear	0, 9999	1	9999	128	
Input terminal function assignment	178	STF terminal function selection	0 to 5, 7, 8, 10, 12, 14, 16, 18, 24, 25, 60, 62, 65 to 67, 9999	1	60	113	
	179	STR terminal function selection	0 to 5, 7, 8, 10, 12, 14, 16, 18, 24, 25, 61, 62, 65 to 67, 9999	1	61	113	
	180	RL terminal function selection	0 to 5, 7, 8, 10, 12, 14, 16, 18, 24, 25, 62, 65 to 67, 9999	1	0	113	
	181	RM terminal function selection		1	1	113	
	182	RH terminal function selection		1	2	113	
Output terminal function assignment	190	RUN terminal function selection	0, 1, 3, 4, 7, 8, 11 to 16, 25, 26, 46, 47, 64, 70, 80, 90, 91, 93, 95, 96, 98, 99, 100, 101, 103, 104, 107, 108, 111 to 116, 125, 126, 146, 147, 164, 170, 180, 190, 191, 193, 195, 196, 198, 199, 9999	1	0	119	
	192	A,B,C terminal function selection	0, 1, 3, 4, 7, 8, 11 to 16, 25, 26, 46, 47, 64, 70, 80, 90, 91, 95, 96, 98, 99, 100, 101, 103, 104, 107, 108, 111 to 116, 125, 126, 146, 147, 164, 170, 180, 190, 191, 195, 196, 198, 199, 9999	1	99	119	
Multi-speed setting	232	Multi-speed setting (speed 8)	0 to 400Hz, 9999	0.01Hz	9999	89	
	233	Multi-speed setting (speed 9)	0 to 400Hz, 9999	0.01Hz	9999	89	
	234	Multi-speed setting (speed 10)	0 to 400Hz, 9999	0.01Hz	9999	89	
	235	Multi-speed setting (speed 11)	0 to 400Hz, 9999	0.01Hz	9999	89	
	236	Multi-speed setting (speed 12)	0 to 400Hz, 9999	0.01Hz	9999	89	
	237	Multi-speed setting (speed 13)	0 to 400Hz, 9999	0.01Hz	9999	89	
	238	Multi-speed setting (speed 14)	0 to 400Hz, 9999	0.01Hz	9999	89	
	239	Multi-speed setting (speed 15)	0 to 400Hz, 9999	0.01Hz	9999	89	
—	240	Soft-PWM operation selection	0, 1	1	1	148	
—	241	Analog input display unit switchover	0, 1	1	0	153	
—	244	Cooling fan operation selection	0, 1	1	1	228	
Slip compensation	245	Rated slip	0 to 50%, 9999	0.01%	9999	78	
	246	Slip compensation time constant	0.01 to 10s	0.01s	0.5s	78	
	247	Constant-power range slip compensation selection	0, 9999	1	9999	78	
—	249	Earth (ground) fault detection at start	0, 1	1	0	146	
—	250	Stop selection	0 to 100s, 1000 to 1100s, 8888, 9999	0.1s	9999	112, 117	
—	251	Output phase loss protection selection	0, 1	1	1	146	

上正科技有限公司
購買、維修 就手機零組件
電話： 037-466333
Email: service@repairtw.com
Line id: @zzzz
www.repairtw.com

Parameter	Remarks	Instruction Code Read	Instruction Code Write	Instruction Code Extended	Control Mode-based Correspondence Table V/F	Control Mode-based Correspondence Table GP MFVC	Parameter Copy	Parameter Clear	Parameter All clear
166		06	86	2	○	○	○	○	○
167		07	87	2	○	○	○	○	○
168	Parameter for manufacturer setting. Do not set.								
169									
170		0A	8A	2	○	○	○	×	○
171		0B	8B	2	○	○	×	×	×
178		12	92	2	○	○	○	×	○
179		13	93	2	○	○	○	×	○
180		14	94	2	○	○	○	×	○
181		15	95	2	○	○	○	×	○
182		16	96	2	○	○	○	×	○
190		1E	9E	2	○	○	○	×	○
192		20	A0	2	○	○	○	×	○
232		28	A8	2	○	○	○	○	○
233		29	A9	2	○	○	○	○	○
234		2A	AA	2	○	○	○	○	○
235		2B	AB	2	○	○	○	○	○
236		2C	AC	2	○	○	○	○	○
237		2D	AD	2	○	○	○	○	○
238		2E	AE	2	○	○	○	○	○
239		2F	AF	2	○	○	○	○	○
240		30	B0	2	○	○	○	○	○
241		31	B1	2	○	○	○	○	○
244		34	B4	2	○	○	○	○	○
245		35	B5	2	○	○	○	○	○
246		36	B6	2	○	○	○	○	○
247		37	B7	2	○	○	○	○	○
249		39	B9	2	○	○	○	○	○
250		3A	BA	2	○	○	○	○	○
251		3B	BB	2	○	○	○	○	○

Function	Parameter	Name	Setting Range	Minimum Setting Increments	Initial Value	Refer to Page	Customer Setting
Life diagnosis	255	Life alarm status display	(0 to 15)	1	0	229	
	256	Inrush current limit circuit life display	(0 to 100%)	1%	100%	229	
	257	Control circuit capacitor life display	(0 to 100%)	1%	100%	229	
	258	Main circuit capacitor life display	(0 to 100%)	1%	100%	229	
	259	Main circuit capacitor life measuring	0, 1 (2, 3, 8, 9)	1	0	229	
—	260	PWM frequency automatic switchover	0, 1	1	0	148	
Power failure stop	261	Power failure stop selection	0, 1, 2	1	0	142	
—	267	Terminal 4 input selection	0, 1, 2	1	0	150	
—	268	Monitor decimal digits selection	0, 1, 9999	1	9999	128	
—	269	Parameter for manufacturer setting. Do not set.					
—	295	Magnitude of frequency change setting	0, 0.01, 0.10, 1.00, 10.00	0.01	0	240	
Password function	296	Password lock level	1 to 6, 101 to 106, 9999	1	9999	163	
	297	Password lock/unlock	1000 to 9999 (0 to 5, 9999)	1	9999	163	
—	298	Frequency search gain	0 to 32767, 9999	1	9999	136	
—	299	Rotation direction detection selection at restarting	0, 1, 9999	1	0	136	
RS-485 communication	338	Communication operation command source	0, 1	1	0	176	
	339	Communication speed command source	0, 1, 2	1	0	176	
	340	Communication startup mode selection	0, 1, 10	1	0	175	
	342	Communication EEPROM write selection	0, 1	1	0	187	
	343	Communication error count	—	1	0	200	
Second motor constant	450	Second applied motor	0, 1, 9999	1	9999	103	
Remote Output	495	Remote output selection	0, 1, 10, 11	1	0	126	
	496	Remote output data 1	0 to 4095	1	0	126	
—	502	Stop mode selection at communication error	0, 1, 2	1	0	184, 200	
Maintenance	503	Maintenance timer	0 (1 to 9998)	1	0	233	
	504	Maintenance timer alarm output set time	0 to 9998, 9999	1	9999	233	
Communication	549	Protocol selection	0, 1	1	0	200	
	551	PU mode operation command source selection	2, 4, 9999	1	9999	176	
Current average time monitor	555	Current average time	0.1 to 1s	0.1s	1s	234	
	556	Data output mask time	0 to 20s	0.1s	0s	234	
	557	Current average value monitor signal output reference current	0 to 500A	0.01A	Rated inverter current	234	
—	561	PTC thermistor protection level	0.5 to 30kΩ , 9999	0.01Ω	9999	100	
—	563	Energization time carrying-over times	(0 to 65535)	1	0	128	

上正科技有限公司
購買、維修、純手四零組件
電話：037-460999
Email: service@repairtw.com
Line id: @zzzz
www.repairtw.com

Parameter	Remarks	Instruction Code			Control Mode-based Correspondence Table		Parameter		
		Read	Write	Extended	V/F	GP MFVC	Copy	Clear	All clear
255		3F	BF	2	○	○	×	×	×
256		40	C0	2	○	○	×	×	×
257		41	C1	2	○	○	×	×	×
258		42	C2	2	○	○	×	×	×
259		43	C3	2	○	○	○	○	○
260		44	C4	2	○	○	○	○	○
261		45	C5	2	○	○	○	○	○
267		4B	CB	2	○	○	○	×	○
268		4C	CC	2	○	○	○	○	○
269	Parameter for manufacturer setting. Do not set.								
295		67	E7	2	○	○	○	○	○
296		68	E8	2	○	○	○	×	○
297		69	E9	2	○	○	○	×	○
298		6A	EA	2	○	○	○	×	○
299		6B	EB	2	○	○	○	○	○
338		26	A6	3	○	○	○	○ *7	○ *7
339		27	A7	3	○	○	○	○ *7	○ *7
340		28	A8	3	○	○	○	○ *7	○ *7
342		2A	AA	3	○	○	○	○	○
343		2B	AB	3	○	○	×	×	×
450		32	B2	4	○	○	○	○	○
495		5F	DF	4	○	○	○	○	○
496		60	E0	4	○	○	×	×	×
502		02	82	5	○	○	○	○	○
503		03	83	5	○	○	×	×	×
504		04	84	5	○	○	○	×	○
549		31	B1	5	○	○	○	○ *7	○ *7
551		33	B3	5	○	○	○	○ *7	○ *7
555		37	B7	5	○	○	○	○	○
556		38	B8	5	○	○	○	○	○
557		39	B9	5	○	○	○	○	○
561		3D	BD	5	○	○	○	×	○
563		3F	BF	5	○	○	×	×	×

Function	Parameter	Name	Setting Range	Minimum Setting Increments	Initial Value	Refer to Page	Customer Setting
—	564	Operating time carrying-over times	(0 to 65535)	1	0	128	
—	571	Holding time at a start	0 to 10s, 9999	0.1s	9999	98	
PID operation	575	Output interruption detection time	0 to 3600s, 9999	0.1s	1s	212	
	576	Output interruption detection level	0 to 400Hz	0.01Hz	0Hz	212	
	577	Output interruption cancel level	900 to 1100%	0.1%	1000%	212	
—	611	Acceleration time at a restart	0 to 3600s, 9999	0.1s	9999	136	
—	653	Speed smoothing control	0 to 200%	0.1%	0	149	
—	665	Regeneration avoidance frequency gain	0 to 200%	0.1%	100	226	
Protective functions	872 *8	Input phase loss protection selection	0, 1	1	0	146	
Regeneration avoidance function	882	Regeneration avoidance operation selection	0, 1, 2	1	0	226	
	883	Regeneration avoidance operation level	300 to 800V	0.1V	400VDC/ 780VDC *5	226	
	885	Regeneration avoidance compensation frequency limit value	0 to 10Hz, 9999	0.01Hz	6Hz	226	
	886	Regeneration avoidance voltage gain	0 to 200%	0.1%	100%	226	
Free parameter	888	Free parameter 1	0 to 9999	1	9999	236	
	889	Free parameter 2	0 to 9999	1	9999	236	
—	891	Cumulative power monitor digit shifted times	0 to 4, 9999	1	9999	128	
Calibration parameters	C1 (901) *6	AM terminal calibration	—	—	—	134	
	C2 (902) *6	Terminal 2 frequency setting bias frequency	0 to 400Hz	0.01Hz	0Hz	153	
	C3 (902) *6	Terminal 2 frequency setting bias	0 to 300%	0.1%	0%	153	
	125 (903) *6	Terminal 2 frequency setting gain frequency	0 to 400Hz	0.01Hz	60Hz	153	
	C4 (903) *6	Terminal 2 frequency setting gain	0 to 300%	0.1%	100%	153	
	C5 (904) *6	Terminal 4 frequency setting bias frequency	0 to 400Hz	0.01Hz	0Hz	153	
	C6 (904) *6	Terminal 4 frequency setting bias	0 to 300%	0.1%	20%	153	
	126 (905) *6	Terminal 4 frequency setting gain frequency	0 to 400Hz	0.01Hz	60Hz	153	
	C7 (905) *6	Terminal 4 frequency setting gain	0 to 300%	0.1%	100%	153	
—	C22 to C25 (922 to 923)	Parameter for manufacturer setting. Do not set.					
PU	990	PU buzzer control	0, 1	1	1	241	
	991	PU contrast adjustment	0 to 63	1	58	241	

上揚科技有限公司
購買、維修 此手冊零組件
電話： 037-466333
Email: service@repairtw.com
Line id: @zzzz
www.repairtw.com

Parameter	Remarks	Instruction Code Read	Instruction Code Write	Instruction Code Extended	Control Mode-based Correspondence Table V/F	Control Mode-based Correspondence Table GP MFVC	Parameter Copy	Parameter Clear	Parameter All clear
564		40	C0	5	○	○	×	×	×
571		47	C7	5	○	○	○	○	○
575		4B	CB	5	○	○	○	○	○
576		4C	CC	5	○	○	○	○	○
577		4D	CD	5	○	○	○	○	○
611		0B	8B	6	○	○	○	○	○
653		35	B5	6	○	○	○	○	○
665		41	C1	6	○	○	○	○	○
872		48	C8	8	○	○	○	○	○
882		52	D2	8	○	○	○	○	○
883		53	D3	8	○	○	○	○	○
885		55	D5	8	○	○	○	○	○
886		56	D6	8	○	○	○	○	○
888		58	D8	8	○	○	○	×	×
889		59	D9	8	○	○	○	×	×
891		5B	D8	8	○	○	○	○	○
C1 (901)		5D	DD	1	○	○	○	×	○
C2 (902)		5E	DE	1	○	○	○	×	○
C3 (902)		5E	DE	1	○	○	○	×	○
125 (903)		5F	DF	1	○	○	○	×	○
C4 (903)		5F	DF	1	○	○	○	×	○
C5 (904)		60	E0	1	○	○	○	×	○
C6 (904)		60	E0	1	○	○	○	×	○
126 (905)		61	E1	1	○	○	○	×	○
C7 (905)		61	E1	1	○	○	○	×	○
C22 to C25 (922 to 923)	Parameter for manufacturer setting. Do not set.								
990		5A	DA	9	○	○	○	○	○
991		5B	DB	9	○	○	○	×	○

Func-tion	Parameter	Name	Setting Range	Minimum Setting Increments	Initial Value	Refer to Page	Customer Setting
Clear parameters Initial value change list	Pr.CL	Parameter clear	0, 1	1	0	242	
	ALLC	All parameter clear	0, 1	1	0	242	
	Er.CL	Faults history clear	0, 1	1	0	244	
	Pr.CH	Initial value change list	—	—	—	243	

*1 Differ according to capacities.
6%: FR-D720-042 or less, FR-D740-022 or less, FR-D720S-042 or less
4%: FR-D720-070 to 165, FR-D740-036 to 080, FR-D720S-070 and 100
3%: FR-D720-238 and 318, FR-D740-120 and 160

*2 Differ according to capacities.
5s: FR-D720-165 or less, FR-D740-080 or less, FR-D720S-008 to 100
10s: FR-D720-238 and 318, FR-D740-120 and 160

*3 Differ according to capacities.
6%: FR-D720-008 and 014, FR-D720S-008 and 014
4%: FR-D720-025 or more, FR-D740-012 or more, FR-D720S-025 or more

*4 Write is disabled in the communication mode (network operation mode) from the PU connector.

*5 The initial value differs according to the voltage class. (200V class, 400V class)

*6 The parameter number in parentheses is the one for use with the operation panel (PA02) for the FR-E500 series or parameter unit (FR-PU04/FR-PU07).

*7 These parameters are communication parameters that are not cleared when parameter clear (all clear) is executed from RS-485 communication. (*Refer to page 180* for RS-485 communication)

*8 Available only for the three-phase power input specification model.

上正科技有限公司
購買、維修 此手冊零組件
電話： 037-466333
Email: service@repairtw.com
Line id: @zzzz
www.repairtw.com

Parameter	Remarks	Instruction Code			Control Mode-based Correspondence Table		Parameter		
		Read	Write	Extended	V/F	GP MFVC	Copy	Clear	All clear
Pr.CL		—	—	—	—	—	—	—	—
ALLC		—	—	—	—	—	—	—	—
Er.CL		—	—	—	—	—	—	—	—
Pr.CH		—	—	—	—	—	—	—	—

4.3 Adjust the output torque (current) of the motor 73

4.3.1 Manual torque boost (Pr. 0, Pr. 46) 73
4.3.2 Large starting torque and low speed torque are necessary (General-purpose magnetic flux vector control (Pr. 71, Pr. 80)) 75
4.3.3 Slip compensation (Pr. 245 to Pr. 247) 78
4.3.4 Stall prevention operation (Pr. 22, Pr. 23, Pr. 48, Pr. 66, Pr. 156, Pr. 157) 79

4.4 Limit the output frequency 83

4.4.1 Maximum/minimum frequency (Pr. 1, Pr. 2, Pr. 18) 83
4.4.2 Avoid mechanical resonance points (frequency jumps) (Pr. 31 to Pr. 36) 84

4.5 Set V/F pattern 85

4.5.1 Base frequency, voltage (Pr. 3, Pr. 19, Pr. 47) 85
4.5.2 Load pattern selection (Pr. 14) 87

4.6 Frequency setting by external terminals 89

4.6.1 Operation by multi-speed operation (Pr. 4 to Pr. 6, Pr. 24 to Pr. 27, Pr. 232 to Pr. 239) 89
4.6.2 Jog operation (Pr. 15, Pr. 16) 91
4.6.3 Remote setting function (Pr. 59) 93

4.7 Setting of acceleration/deceleration time and acceleration/deceleration pattern 96

4.7.1 Setting of the acceleration and deceleration time (Pr. 7, Pr. 8, Pr. 20, Pr. 44, Pr. 45) 96
4.7.2 Starting frequency and start-time hold function (Pr. 13, Pr. 571) 98
4.7.3 Acceleration/deceleration pattern (Pr. 29) 99

4.8 Selection and protection of a motor 100

4.8.1 Motor overheat protection (Electronic thermal O/L relay, PTC thermistor protection) (Pr. 9, Pr. 51, Pr. 561) 100
4.8.2 Applied motor (Pr. 71, Pr. 450) 103
4.8.3 To exhibit the best performance of the motor (offline auto tuning) (Pr. 71, Pr. 80, Pr. 82 to Pr. 84, Pr. 90, Pr. 96) 105

4.9 Motor brake and stop operation 109

4.9.1 DC injection brake (Pr. 10 to Pr. 12) 109
4.9.2 Selection of a regenerative brake (Pr. 30, Pr. 70) 110
4.9.3 Stop selection (Pr. 250) 112

4.10 Function assignment of external terminal and control 113

4.10.1 Input terminal function selection (Pr. 178 to Pr. 182) 113
4.10.2 Inverter output shutoff signal (MRS signal, Pr. 17) 115
4.10.3 Condition selection of function validity by second function selection signal (RT) 116
4.10.4 Start signal operation selection (STF, STR, STOP signal, Pr. 250) 117
4.10.5 Output terminal function selection (Pr. 190, Pr. 192) 119
4.10.6 Detection of output frequency (SU, FU signal, Pr. 41 to Pr. 43) 123
4.10.7 Output current detection function (Y12 signal, Y13 signal, Pr. 150 to Pr. 153, Pr. 166, Pr. 167) 124

上正科技有限公司
購買、維修、性手冊零組件
電話: 037-466333
Email: service@repair.tw.com
Line ID: @2222
www.repair.tw.com

4.10.8 Remote output selection (REM signal, Pr. 495, Pr. 496) 126

4.11 Monitor display and monitor output signal 127

4.11.1 Speed display and speed setting (Pr. 37) 127
4.11.2 Monitor display selection of operation panel/PU and terminal AM (Pr. 52, Pr.158, Pr. 170, Pr. 171, Pr. 268, Pr. 563, Pr. 564, Pr. 891) 128
4.11.3 Reference of the terminal AM (analog voltage output) (Pr. 55, Pr. 56) 133
4.11.4 Terminal AM calibration (calibration parameter C1 (Pr.901)) 134

4.12 Operation selection at power failure and instantaneous power failure 136

4.12.1 Automatic restart after instantaneous power failure/flying start (Pr. 30, Pr. 57, Pr. 58, Pr. 96, Pr. 162, Pr. 165, Pr. 298, Pr. 299, Pr. 611) 136
4.12.2 Power-failure deceleration stop function (Pr. 261) 142

4.13 Operation setting at fault occurrence 144

4.13.1 Retry function (Pr. 65, Pr. 67 to Pr. 69) 144
4.13.2 Input/output phase loss protection selection (Pr. 251, Pr. 872) 146
4.13.3 Earth (ground) fault detection at start (Pr. 249) 146

4.14 Energy saving operation 147

4.14.1 Optimum excitation control (Pr. 60) 147

4.15 Motor noise, EMI measures, mechanical resonance 148

4.15.1 PWM carrier frequency and Soft-PWM control (Pr. 72, Pr. 240, Pr. 260) 148
4.15.2 Speed smoothing control (Pr. 653) 149

4.16 Frequency setting by analog input (terminal 2, 4) 150

4.16.1 Analog input selection (Pr. 73, Pr. 267) 150
4.16.2 Response level of analog input and noise elimination (Pr. 74) 152
4.16.3 Bias and gain of frequency setting voltage (current) (Pr. 125, Pr. 126, Pr. 241, C2 (Pr. 902) to C7 (Pr. 905)) 153

4.17 Misoperation prevention and parameter setting restriction 158

4.17.1 Reset selection/disconnected PU detection/PU stop selection (Pr. 75) 158
4.17.2 Parameter write disable selection (Pr. 77) 161
4.17.3 Reverse rotation prevention selection (Pr. 78) 162
4.17.4 Extended parameter display (Pr. 160) 162
4.17.5 Password function (Pr. 296, Pr. 297) 163

4.18 Selection of operation mode and operation location 165

4.18.1 Operation mode selection (Pr. 79) 165
4.18.2 Operation mode at power-on (Pr. 79, Pr. 340) 175
4.18.3 Start command source and frequency command source during communication operation (Pr. 338, Pr. 339, Pr. 551) 176

4.19 Communication operation and setting 180

4.19.1 Wiring and configuration of PU connector 180
4.19.2 Initial settings and specifications of RS-485 communication (Pr. 117 to Pr. 120, Pr. 123, Pr. 124, Pr. 549) 183

上正科技有限公司
www.repairtw.com

4.19.3 Operation selection at communication error occurrence (Pr. 121, Pr. 122, Pr. 502) 184
4.19.4 Communication EEPROM write selection (Pr. 342) 187
4.19.5 Mitsubishi inverter protocol (computer link communication) 188
4.19.6 Modbus RTU communication specifications
(Pr. 117, Pr. 118, Pr. 120, Pr. 122, Pr. 343, Pr. 502, Pr. 549) 200

4.20 Special operation and frequency control 212

4.20.1 PID control (Pr. 127 to Pr. 134, Pr. 575 to Pr. 577) 212
4.20.2 Dancer control (Pr. 44, Pr. 45, Pr. 128 to Pr. 134) 220
4.20.3 Regeneration avoidance function (Pr. 665, Pr. 882, Pr. 883, Pr. 885, Pr. 886) 226

4.21 Useful functions 228

4.21.1 Cooling fan operation selection (Pr. 244) 228
4.21.2 Display of the life of the inverter parts (Pr. 255 to Pr. 259) 229
4.21.3 Maintenance timer alarm (Pr. 503, Pr. 504) 233
4.21.4 Current average value monitor signal (Pr. 555 to Pr. 557) 234
4.21.5 Free parameter (Pr. 888, Pr. 889) 236

4.22 Setting the parameter unit and operation panel 237

4.22.1 RUN key rotation direction selection (Pr. 40) 237
4.22.2 PU display language selection(Pr.145) 237
4.22.3 Operation panel frequency setting/key lock operation selection (Pr. 161) 238
4.22.4 Magnitude of frequency change setting (Pr. 295) 240
4.22.5 Buzzer control (Pr. 990) 241
4.22.6 PU contrast adjustment (Pr. 991) 241

4.23 Parameter clear/ All parameter clear 242

4.24 Initial value change list 243

4.25 Check and clear of the faults history 244

上河科技有限公司
購買、修復工業自動化零組件
電話： 037-466333
Email: service@repairtw.com
www.repairtw.com

4.3 Adjust the output torque (current) of the motor

Purpose	Parameter that should be Set		Refer to Page
Set starting torque manually	**Manual torque boost**	**Pr. 0, Pr. 46**	*73*
Automatically control output current according to load	**General-purpose magnetic flux vector control**	**Pr. 71, Pr. 80**	*75*
Compensate for motor slip to secure low-speed torque	**Slip compensation**	**Pr. 245 to Pr. 247**	*78*
Limit output current to prevent inverter trip	**Stall prevention operation**	**Pr. 22, Pr. 23, Pr. 66, Pr. 156, Pr. 157**	*79*

4.3.1 Manual torque boost (Pr. 0, Pr. 46) V/F

Motor torque reduction in the low-speed range can be improved by compensating a voltage drop in the low-frequency range.
- Motor torque in the low-frequency range can be adjusted to the load to increase the starting motor torque.
- Two kinds of start torque boosts can be changed by switching between terminals.

Parameter Number	Name	Initial Value		Setting Range	Description
0	**Torque boost**	FR-D720-042 or less FR-D740-022 or less FR-D720S-008 to 042	6%	0 to 30%	Set the output voltage at 0Hz as %.
		FR-D720-070 to 165 FR-D740-036 to 080 FR-D720S-070 and 100	4%		
		FR-D720-238 and 318 FR-D740-120 and 160	3%		
46 *	**Second torque boost**	9999		0 to 30%	Set the torque boost when the RT signal is on.
				9999	Without second torque boost

* The above parameters can be set when *Pr. 160 Extended function display selection* = "0". *(Refer to page 162)*

上正科技有限公司
購買、維修 此手冊零組件
電話： 037-466333
Email: service@repairtw.com
Line id: @zzzz
www.repairtw.com

(1) Starting torque adjustment

- On the assumption that *Pr. 19 Base frequency voltage* is 100%, set the output voltage at 0Hz in % to *Pr. 0 (Pr. 46)*.
- Adjust the parameter little by little (about 0.5%), and check the motor status each time. If the setting is too large, the motor will overheat. The guideline is about 10% at the greatest.

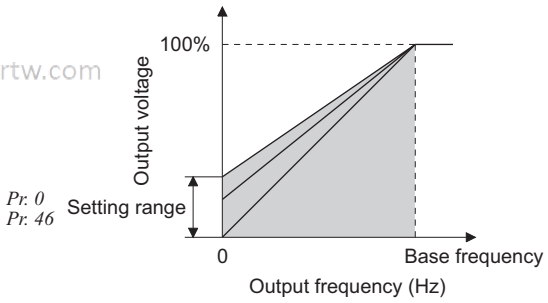

(2) Set two kinds of torque boosts (RT signal, *Pr. 46*)

- When you want to change torque boost according to applications, switch multiple motors with one inverter, etc., use *Second torque boost*.
- *Pr. 46 Second torque boost* is valid when the RT signal is on.
- For the terminal used for RT signal input, set "3" in any of *Pr. 178 to Pr. 182 (input terminal function selection)* to assign the function.

REMARKS

- The RT signal acts as the second function selection signal and makes the other second functions valid. *(Refer to page 116)*

NOTE

- **The amount of current flows in the motor may become large according to the conditions such as the motor characteristics, load, acceleration/deceleration time, wiring length, etc., resulting in an overcurrent trip (OL (overcurrent alarm) then E.OC1 (overcurrent trip during acceleration), overload trip (E.THM (motor overload trip), or E.THT (inverter overload trip).**
  (When a fault occurs, release the start command, and decrease the *Pr. 0* setting 1% by 1% to reset.) (*Refer to page 248*.)
- **The *Pr. 0*, *Pr. 46* settings are valid only when V/F control is selected.**
- **When using the inverter dedicated motor (constant torque motor) with the FR-D720-238 and 318, FR-D740-120 and 160, set torque boost value to 2%.**
  When *Pr. 0* = "3%"(initial value), if *Pr. 71* value is changed to the setting for use with a constant-torque motor, the *Pr. 0* setting changes to 2%.
- **Changing the terminal assignment using *Pr. 178 to Pr. 182 (input terminal function selection)* may affect the other functions. Make setting after confirming the function of each terminal.**

Parameters referred to

Pr. 3 Base frequency, Pr. 19 Base frequency voltage ☞ *Refer to page 85*
Pr. 71 Applied motor ☞ *Refer to page 103*
Pr. 178 to Pr. 182 (input terminal function selection) ☞ *Refer to page 113*

上正科技有限公司
購買、維修 此手冊零組件
電話： 037-466333
Email: service@repairtw.com
Line id: @zzzz
www.repairtw.com

4.3.2 Large starting torque and low speed torque are necessary (General-purpose magnetic flux vector control (Pr. 71, Pr. 80)) GP MFVC

General-purpose magnetic flux vector control is available.
Large starting torque and low speed torque are available with General-purpose magnetic flux vector control.

● What is General-purpose magnetic flux vector control ?
The low speed torque can be improved by providing voltage compensation to flow a motor current which meets the load torque. With setting slip compensation *(Pr. 245 to Pr. 247),* output frequency compensation (slip compensation) is made so that the actual motor speed goes closer to a speed command value. Effective when load fluctuates drastically, etc.

General-purpose magnetic flux vector control is the same function as the FR-E500 series.

Parameter Number	Name	Initial Value	Setting Range	Description
71	**Applied motor**	0	0,1, 3, 13, 23, 40, 43 50, 53	By selecting a standard motor or constant torque motor, thermal characteristic and motor constants of each motor are set.
80	**Motor capacity**	9999	0.1 to 7.5kW	Applied motor capacity. (General-purpose magnetic flux vector control)
			9999	V/F control

The above parameters can be set when *Pr. 160 Extended function display selection* = "0". *(Refer to page 162)*

POINT

If the following conditions are not satisfied, select V/F control since malfunction such as insufficient torque and uneven rotation may occur.

- The motor capacity should be equal to or one rank lower than the inverter capacity. (note that the capacity should be 0.1kW or more)
- Motor to be used is any of Mitsubishi standard motor, high efficiency motor (SF-JR, SF-HR 0.2kW or more) or Mitsubishi constant torque motor (SF-JRCA four-pole, SF-HRCA 0.4kW to 7.5kW). When using a motor other than the above (other manufacturer's motor), perform offline auto tuning without fail.
- Single-motor operation (one motor run by one inverter) should be performed.
- The wiring length from inverter to motor should be within 30m (98.42feet). (Perform offline auto tuning in the state where wiring work is performed when the wiring length exceeds 30m (98.42feet).)
  Permissible wiring length between inverter and motor differs according to the inverter capacity and setting value of *Pr. 72 PWM frequency selection* (carrier frequency). *Refer to page 19* for the permissible wiring length.

上正科技有限公司
購買、維修 此手冊零組件
電話： 03-4800339
Email: service@repairtw.com
Line id: @3ZZ
www.repairtw.com

(1) Control mode

- V/F control (initial setting) and General-purpose magnetic flux vector control are available with this inverter.
- V/F control is for controlling frequency and voltage so that the ratio of frequency (F) to voltage (V) is constant when changing frequency.
- General-purpose magnetic flux vector control divides the inverter output current into an excitation current and a torque current by vector calculation, and makes voltage compensation to flow a motor current which meets the load torque. (General-purpose magnetic flux vector control is the same function as the FR-E500 series.)

(2) Selection method of General-purpose magnetic flux vector control

Perform secure wiring.
(Refer to page 14)

↓

Display the extended function parameters.
(Pr. 160) (Refer to page 162)

↓ Set "0" in *Pr. 160* to display the extended function parameters.

Set the motor. *(Pr. 71)*

Motor		*Pr. 71* Setting ∗1	Remarks
Mitsubishi standard motor Mitsubishi high efficiency motor	SF-JR	0 (initial value)	
	SF-HR	40	
	Others	3	Offline auto tuning is necessary. ∗2
Mitsubishi constant-torque motor	SF-JRCA 4P	1	
	SF-HRCA	50	
	Others (SF-JRC, etc.)	13	Offline auto tuning is necessary. ∗2
Other standard motor	—	3	Offline auto tuning is necessary. ∗2
Other constant-torque motor	—	13	Offline auto tuning is necessary. ∗2

∗1 *Refer to page 103* for other settings of *Pr. 71*.
∗2 *Refer to page 105* for offline auto tuning.

↓

Set the motor capacity.
(Pr. 80) (Refer to page 74)

↓ Set motor capacity (kW) in *Pr. 80 Motor capacity*.
(V/F control is performed when the setting is "9999" (initial value).

Set the operation command. *(Refer to page 165)*

Select the start command and speed command.

(1)Start command

1)Operation panel: Setting by pressing RUN of the operation panel
2)External command: Setting by forward rotation or reverse rotation command (terminal STF or STR)

(2)Speed command

1)Operation panel: Setting by turning of the operation panel
2)External analog command (terminal 2 or 4):
Give a speed command using the analog signal input to terminal 2 (or terminal 4).
3)Multi-speed command:
The external signals (RH, RM, RL) may also be used to give speed command.

上誠科技有限公司
電話： 037-466333
Email: service@repairtw.com
Line id: xxxxz
www.repairtw.com

↓

Test run

As required

- Perform offline auto tuning. *(Pr. 96) (Refer to page 105)*
- Set motor excitation current. *(Pr. 82) (Refer to page 105)*
- Set slip compensation. *(Pr. 245, Pr. 246, Pr. 247) (Refer to page 78)*

NOTE

- **Uneven rotation slightly increases as compared to the V/F control. (It is not suitable for machines such as grinding machine and wrapping machine which requires less uneven rotation at low speed.)**
- **When a surge voltage suppression filter (FR-ASF-H/FR-BMF-H) is connected between the inverter and motor, output torque may decrease.**

(3) Control method switching by external terminals (X18 signal)

- Use the V/F switchover signal (X18) to change the control method (V/F control and General-purpose magnetic flux vector control) with external terminal.
- Turn the X18 signal on to change the currently selected control method (General-purpose magnetic flux vector control) to V/F control.

For the terminal used for X18 signal input, set "18" in any of *Pr. 178 to Pr. 182 (input terminal function selection)* to assign the function.

REMARKS

When V/F control is selected by V/F switchover (X18 signal), second function is also selected at the same time. Control between V/F control and General-purpose magnetic flux vector control can not be switched while the inverter is running. In case control is switched between V/F control and General-purpose magnetic flux vector control, only second function is selected.

NOTE

- **Changing the terminal assignment using *Pr. 178 to Pr. 182 (input terminal function selection)* may affect the other functions. Make setting after confirming the function of each terminal.**

Parameters referred to

Pr.3 Base frequency, Pr.19 Base frequency voltage ☞ *Refer to page 85*
Pr.71 Applied motor ☞ *Refer to page 103*
Pr.77 Parameter write selection ☞ *Refer to page 161*
Pr. 178 to Pr. 182 (input terminal function selection) ☞ *Refer to page 113*

上正科技有限公司
購買、維修 此手冊零組件
電話： 037-466333
Email: service@repairtw.com
Line id: @zzzz
www.repairtw.com

4.3.3 Slip compensation (Pr. 245 to Pr. 247)

Inverter output current may be used to assume motor slip to keep the motor speed constant.

Parameter Number	Name	Initial Value	Setting Range	Description
245	Rated slip	9999	0.01 to 50%	Rated motor slip
			0, 9999	No slip compensation
246	Slip compensation time constant	0.5s	0.01 to 10s	Slip compensation response time. When the value is made smaller, response will be faster. However, as load inertia is greater, a regenerative overvoltage fault (E.OV□) is more liable to occur.
247	Constant-power range slip compensation selection	9999	0	Slip compensation is not made in the constant power range. (frequency range above the frequency set in *Pr. 3*)
			9999	Slip compensation is made in the constant power range.

The above parameters can be set when *Pr. 160 Extended function display selection* = "0". *(Refer to page 162)*

- Slip compensation is validated when the motor rated slip calculated by the following formula is set in *Pr. 245*. Slip compensation is not made when *Pr. 245* = "0" or "9999".

$$\text{Rated slip} = \frac{\text{Synchronous speed at base frequency - rated speed}}{\text{Synchronous speed at base frequency}} \times 100[\%]$$

上正科技有限公司
購買、維修 此手冊零組件
電話： 037-466333
Email: service@repairtw.com
Line id: @zzzz
www.repairtw.com

REMARKS

- When performing slip compensation, the output frequency may become greater than the set frequency. Set the *Pr. 1 Maximum frequency* value a little higher than the set frequency.

Parameters referred to

Pr. 1 Maximum frequency ☞ *Refer to page 83*
Pr. 3 Base frequency ☞ *Refer to page 85*

4.3.4 Stall prevention operation (Pr. 22, Pr. 23, Pr. 48, Pr. 66, Pr. 156, Pr. 157)

This function monitors the output current and automatically changes the output frequency to prevent the inverter from coming to trip due to overcurrent, overvoltage, etc.
It can also limit stall prevention and fast-response current limit operation during acceleration/deceleration, driving or regeneration.

- Stall prevention
  If the output current exceeds the stall prevention operation level, the output frequency of the inverter is automatically changed to reduce the output current.
- Fast-response current limit
  If the current exceeds the limit value, the output of the inverter is shut off to prevent an overcurrent.

Parameter Number	Name	Initial Value	Setting Range	Description
22	**Stall prevention operation level**	150%	0	Stall prevention operation invalid
			0.1 to 200%	Set the current value to start the stall prevention operation.
23	**Stall prevention operation level compensation factor at double speed**	9999	0 to 200%	The stall operation level can be reduced when operating at a high speed above the rated frequency.
			9999	Constant according to *Pr. 22.*
48	**Second stall prevention operation current**	9999	0	Stall prevention operation invalid
			0.1 to 200%	Second stall prevention operation level
			9999	Same level as *Pr. 22*.
66	**Stall prevention operation reduction starting frequency**	60Hz	0 to 400Hz	Set the frequency at which the stall operation level is started to reduce.
156	**Stall prevention operation selection**	0	0 to 31, 100, 101	Select whether stall prevention operation and fast-response current limit operation will be performed or not.
157	**OL signal output timer**	0s	0 to 25s	Output start time of the OL signal output when stall prevention is activated.
			9999	Without the OL signal output

The above parameters can be set when *Pr. 160 Extended function display selection* = "0". *(Refer to page 162)*

上正科技有限公司
購買、維修 此手冊零組件
電話： 037-466339
Email: service@repairtw.com
Line id: @zzzz

(1) Block diagram

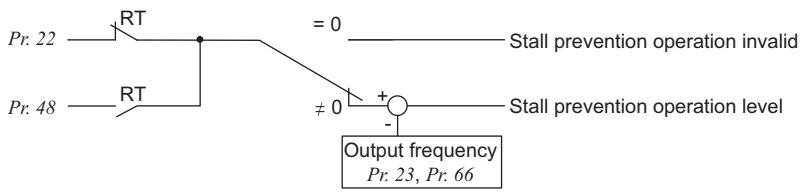

(2) Setting of stall prevention operation level *(Pr. 22)*

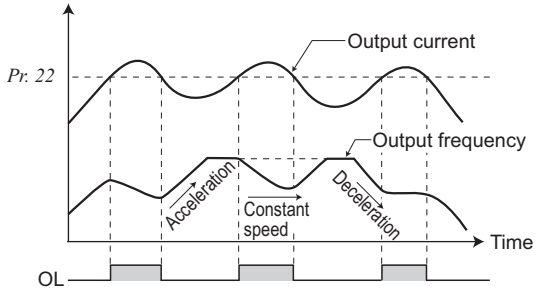

Stall prevention operation example

- Set in *Pr. 22* the percentage of the output current to the rated inverter current at which stall prevention operation will be performed. Normally set this parameter to 150% (initial value).
- Stall prevention operation stops acceleration (makes deceleration) during acceleration, makes deceleration during constant speed, and stops deceleration (makes acceleration) during deceleration.
- When stall prevention operation is performed, the OL signal is output.

NOTE

- **If an overload status lasts long, an inverter trip (e.g. electronic thermal O/L relay (E.THM)) may occur.**

(3) Stall prevention operation signal output and output timing adjustment (OL signal, *Pr. 157*)

- When the output current exceeds the stall prevention operation level and stall prevention is activated, the stall prevention operation signal (OL signal) turns on for longer than 100ms. When the output current falls to or below the stall prevention operation level, the output signal turns off.
- Use *Pr. 157 OL signal output timer* to set whether the OL signal is output immediately or after a preset period of time.
- This operation is also performed when the regeneration avoidance function or oL (overvoltage stall) is executed.
- For the OL signal, set "3 (positive logic) or 103 (negative logic)" in *Pr. 190 or Pr. 192 (output terminal function selection)* and assign functions to the output terminal.

Pr. 157 Setting	Description
0 (initial value)	Output immediately.
0.1 to 25	Output after the set time (s) has elapsed.
9999	Not output.

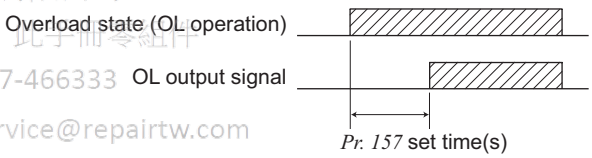

上正科技有限公司
購買、維修 此手冊零組件
電話： 037-466333
Email: service@repairtw.com
Line id: @zzzz
www.repairtw.com

NOTE

- **If the frequency has fallen to 1Hz by stall prevention operation and remains for 3s, a fault (E.OLT) appears to trip the inverter output.**
- **Changing the terminal assignment using *Pr. 190, Pr. 192 (output terminal function selection)* may affect the other functions. Make setting after confirming the function of each terminal.**

(4) Setting of stall prevention operation in high frequency range *(Pr. 22, Pr. 23, Pr. 66)*

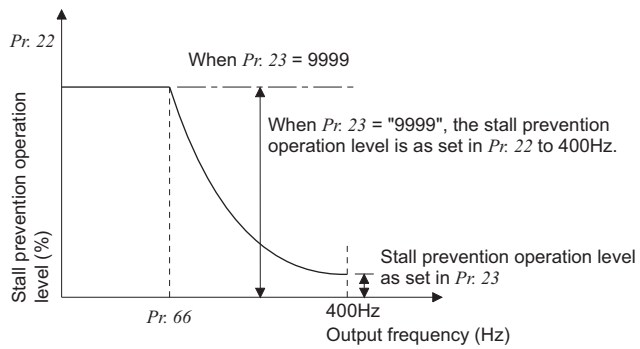

Setting example (*Pr. 22* = 150%, *Pr. 23* = 100%, *Pr. 66* = 60Hz)

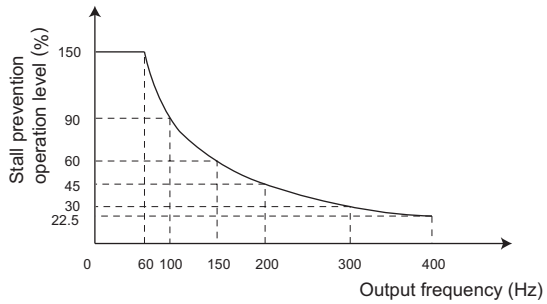

- During high-speed operation above the rated motor frequency, acceleration may not be made because the motor current does not increase. If operation is performed in a high frequency range, the current at motor lockup becomes smaller than the rated output current of the inverter, and the protective function (OL) is not executed even if the motor is at a stop.
  To improve the operating characteristics of the motor in this case, the stall prevention level can be reduced in the high frequency range. This function is effective for performing operation up to the high-speed range on a centrifugal separator, etc. Normally, set 60Hz in *Pr. 66* and 100% in *Pr. 23*.
- Formula for stall prevention operation level

$$\text{Stall prevention operation level in high frequency range (\%)} = A + B \times \left[\frac{Pr.\ 22 - A}{Pr.\ 22 - B}\right] \times \left[\frac{Pr.\ 23 - 100}{100}\right]$$

$$\text{However,}\quad A = \frac{Pr.\ 66\ (\text{Hz}) \times Pr.\ 22\ (\%)}{\text{Output frequency (Hz)}},\quad B = \frac{Pr.\ 66\ (\text{Hz}) \times Pr.\ 22\ (\%)}{400\text{Hz}}$$

- By setting "9999" (initial value) in *Pr. 23 Stall prevention operation level compensation factor at double speed*, the stall prevention operation level is constant at the *Pr. 22* setting up to 400Hz.

中正科技有限公司
購買、維修 此手冊零組件
電話： 037-466333
www.repairtw.com

(5) Set two types of stall prevention operation levels *(Pr. 48)*

- Turning RT signal on makes *Pr. 48 Second stall prevention operation current* valid.
- For the terminal used for RT signal input, set "3" in any of *Pr. 178 to Pr. 182 (input terminal function selection)* to assign the function.

NOTE

- **Changing the terminal assignment using *Pr. 178 to Pr. 182 (input terminal function selection)* may affect the other functions. Make setting after confirming the function of each terminal.**
- **The RT signal acts as the second function selection signal and makes the other second functions valid.**
  (Refer to page 116)

(6) Limit the stall prevention operation and fast-response current limit operation according to the operating status *(Pr. 156)*

- Refer to the following table and select whether stall prevention operation and fast-response current limit operation will be performed or not and the operation to be performed at OL signal output.

Pr. 156 Setting	Fast-Response Current Limit ○: Activated ●: Not activated	Stall Prevention Operation Selection ○: Activated ●: Not activated			OL Signal Output ○:Operation continued ●: Operation not continued *1	*Pr. 156* Setting	Fast-Response Current Limit ○: Activated ●: Not activated	Stall Prevention Operation Selection ○: Activated ●: Not activated			OL Signal Output ○:Operation continued ●: Operation not continued *1
		Acceleration	Constant speed	Deceleration				Acceleration	Constant speed	Deceleration	
0 (initial value)	○	○	○	○	○	16	○	○	○	○	●
1	●	○	○	○	○	17	●	○	○	○	●
2	○	●	○	○	○	18	○	●	○	○	●
3	●	●	○	○	○	19	●	●	○	○	●
4	○	○	●	○	○	20	○	○	●	○	●
5	●	○	●	○	○	21	●	○	●	○	●
6	○	●	●	○	○	22	○	●	●	○	●
7	●	●	●	○	○	23	●	●	●	○	●
8	○	○	○	●	○	24	○	○	○	●	●
9	●	○	○	●	○	25	●	○	○	●	●
10	○	●	○	●	○	26	○	●	○	●	●
11	●	●	○	●	○	27	●	●	○	●	●
12	○	○	●	●	○	28	○	○	●	●	●
13	●	○	●	●	○	29	●	○	●	●	●
14	○	●	●	●	— *2	30	○	●	●	●	— *2
15	●	●	●	●	— *2	31	●	●	●	●	— *2
100 *3 Power driving	○	○	○	○	○	101 *3 Power driving	●	○	○	○	○
100 *3 Regeneration	●	●	●	●	— *2	101 *3 Regeneration	●	●	●	●	— *2

上正科技有限公司
購買、維修 此手機零組件
電話： 037-466633
Email: service@repairtw.com
Line id: @zzz
www.repairtw.com

*1 When "Operation not continued for OL signal output" is selected, the E.OLT fault (stopped by stall prevention) is displayed and operation is stopped.
*2 Since stall prevention is not activated, OL signal and E.OLT are not output.
*3 The settings "100" and "101" allow operations to be performed in the driving and regeneration modes, respectively. The setting "101" disables the fast-response current limit in the driving mode.

NOTE

- **When the load is heavy or the acceleration/deceleration time is short, stall prevention is activated and acceleration/deceleration may not be made according to the preset acceleration/deceleration time. Set *Pr. 156* and stall prevention operation level to the optimum values.**
- **In vertical lift applications, make setting so that the fast-response current limit is not activated. Torque may not be produced, causing a load drop due to gravity.**

⚠ CAUTION

⚠ **Do not set a small value as the stall prevention operation current.**
Otherwise, torque generated will reduce.

⚠ **Test operation must be performed.**
Stall prevention operation during acceleration may increase the acceleration time.
Stall prevention operation performed during constant speed may cause sudden speed changes.
Stall prevention operation during deceleration may increase the deceleration time, increasing the deceleration distance.

Parameters referred to

- *Pr. 3 Base frequency* ☞ *Refer to page 85*
- *Pr. 178 to Pr. 182 (input terminal function selection)* ☞ *Refer to page 113*
- *Pr. 190, Pr. 192 (output terminal function selection)* ☞ *Refer to page 119*

4.4 Limit the output frequency

Purpose	Parameter that should be Set		Refer to Page
Set upper limit and lower limit of output frequency	**Maximum/minimum frequency**	**Pr. 1, Pr. 2, Pr. 18**	*83*
Perform operation by avoiding mechanical resonance points	**Frequency jump**	**Pr. 31 to Pr. 36**	*84*

4.4.1 Maximum/minimum frequency (Pr. 1, Pr. 2, Pr. 18)

Motor speed can be limited.
Clamp the upper and lower limits of the output frequency.

Parameter Number	Name	Initial Value	Setting Range	Description
1	**Maximum frequency**	120Hz	0 to 120Hz	Upper limit of the output frequency.
2	**Minimum frequency**	0Hz	0 to 120Hz	Lower limit of the output frequency.
18 *	**High speed maximum frequency**	120Hz	120 to 400Hz	Set when performing the operation at 120Hz or more.

* The above parameters can be set when *Pr. 160 Extended function display selection* = "0". (*Refer to page 162*)

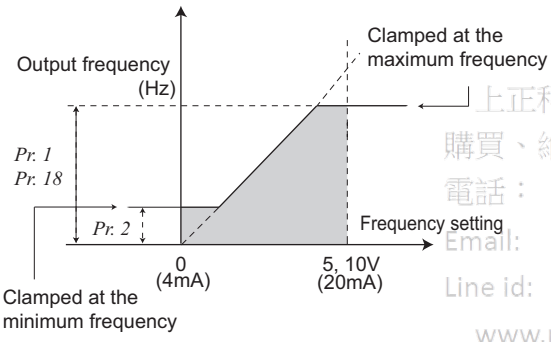

上正科技有限公司
購買、維修 此手冊零組件
電話： 037-466333
Email: service@repairtw.com
Line id: @zzzz
www.repairtw.com

(1) Set maximum frequency

- Use *Pr. 1 Maximum frequency* to set the maximum frequency. If the frequency of the frequency command entered is higher than the setting, the output frequency is clamped at the maximum frequency.
- To perform operation above 120Hz, set the upper limit of the output frequency to *Pr. 18 High speed maximum frequency*.
  (When *Pr. 18* is set, *Pr. 1* automatically switches to the frequency of *Pr. 18*. Also, when *Pr. 1* is set, *Pr. 18* is automatically changed to the frequency set in *Pr. 1*.

REMARKS

- When performing operation above 60Hz using the frequency setting analog signal, change *Pr. 125 (Pr. 126) (frequency setting gain)*.

(2) Set minimum frequency

- Use *Pr. 2 Minimum frequency* to set the minimum frequency.
- If the set frequency is less than *Pr. 2*, the output frequency is clamped at *Pr. 2* (will not fall below *Pr. 2*).

REMARKS

- When *Pr. 15 Jog frequency* is equal to or less than *Pr. 2*, the *Pr. 15* setting has precedence over the *Pr. 2* setting.
- When stall prevention is activated to decrease the output frequency, the output frequency may drop to *Pr. 2* or below.

CAUTION

Note that when *Pr. 2* is set to any value equal to or more than *Pr. 13 Starting frequency*, simply turning on the start signal will run the motor at the preset frequency according to the set acceleration time even if the command frequency is not input.

Parameters referred to

Pr. 13 Starting frequency ☞ *Refer to page 98*
Pr. 15 Jog frequency ☞ *Refer to page 91*
Pr. 125 Terminal 2 frequency setting gain frequency, Pr. 126 Terminal 4 frequency setting gain frequency ☞ *Refer to page 153*

4.4.2 Avoid mechanical resonance points (frequency jumps) (Pr. 31 to Pr. 36)

When it is desired to avoid resonance attributable to the natural frequency of a mechanical system, these parameters allow resonant frequencies to be jumped.

Parameter Number	Name	Initial Value	Setting Range	Description
31	**Frequency jump 1A**	9999	0 to 400Hz, 9999	1A to 1B, 2A to 2B, 3A to 3B are frequency jumps 9999: Function invalid
32	**Frequency jump 1B**	9999	0 to 400Hz, 9999	
33	**Frequency jump 2A**	9999	0 to 400Hz, 9999	
34	**Frequency jump 2B**	9999	0 to 400Hz, 9999	
35	**Frequency jump 3A**	9999	0 to 400Hz, 9999	
36	**Frequency jump 3B**	9999	0 to 400Hz, 9999	

The above parameters can be set when *Pr. 160 Extended function display selection* = "0". *(Refer to page 162)*

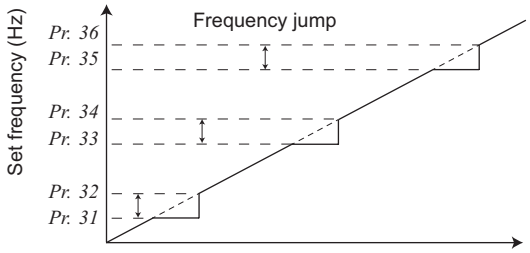

- Up to three areas may be set, with the jump frequencies set to either the top or bottom point of each area.
- The value set to 1A, 2A or 3A is a jump point, and operation in the jump zone is performed at these frequencies.

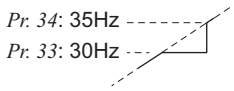

Example 1 To fix the frequency to 30Hz in the range of 30Hz to 35Hz, set 35Hz in *Pr. 34* and 30Hz in *Pr. 33*.

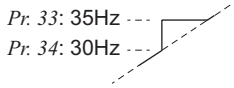

Example 2 To jump the frequency to 35Hz in the range of 30Hz to 35Hz, set 35Hz in *Pr. 33* and 30Hz in *Pr. 34*.

上正科技有限公司
購買、維修、此手冊零組件
電話： 037-466333
Email: service@repairtw.com
Line Id: @zzzz
www.repairtw.com

NOTE

During acceleration/deceleration, the running frequency within the set area is valid.

4.5 Set V/F pattern

Purpose	Parameter that should be Set		Refer to Page
Set motor ratings	Base frequency, Base frequency voltage	Pr. 3, Pr. 19, Pr. 47	85
Select a V/F pattern according to applications.	Load pattern selection	Pr. 14	87

4.5.1 Base frequency, voltage (Pr. 3, Pr. 19, Pr. 47) V/F

Used to adjust the inverter outputs (voltage, frequency) to the motor rating.

Parameter Number	Name	Initial Value	Setting Range	Description
3	Base frequency	60Hz	0 to 400Hz	Rated motor frequency (50Hz/60Hz)
19 *	Base frequency voltage	9999	0 to 1000V	Base voltage
			8888	95% of power supply voltage
			9999	Same as power supply voltage
47 *	Second V/F (base frequency)	9999	0 to 400Hz	Base frequency when the RT signal is on
			9999	Second V/F invalid

* The above parameters can be set when *Pr. 160 Extended function display selection* = "0". *(Refer to page 162)*

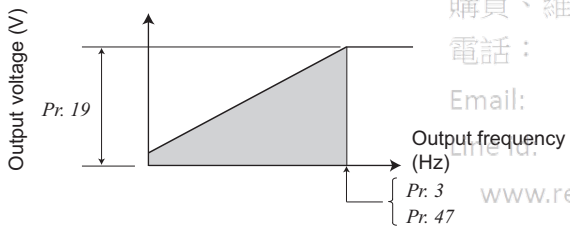

(1) Base frequency setting *(Pr. 3)*

- When operating a standard motor, generally set the rated frequency of the motor to *Pr. 3 Base frequency*. When running the motor using commercial power supply-inverter switch-over operation, set *Pr. 3* to the same value as the power supply frequency.
- If the frequency given on the motor rating plate is "50Hz" only, always set to "50Hz". Leaving the base frequency unchanged from "60Hz" may make the voltage too low and the torque insufficient. It may result in an inverter trip due to overload.
  Special care must be taken when "1" (variable torque load) is set in *Pr. 14 Load pattern selection* .
- When using the Mitsubishi constant-torque motor, set *Pr. 3* to 60Hz.

上正科技有限公司
購買、維修 此手冊零組件
電話： 037-466333
Email: service@repairtw.com
Line Id. @zzzz
www.repairtw.com

(2) Set two kinds of base frequencies *(Pr. 47)*

- To change the base frequency when switching two types of motors with one inverter, use the *Pr. 47 Second V/F (base frequency)*.
- *Pr. 47 Second V/F (base frequency)* is valid when the RT signal is on. Set "3" in any of *Pr. 178 to Pr. 182 (input terminal function selection)* and assign the RT signal.

REMARKS

- The RT signal acts as the second function selection signal and makes the other second functions valid. *(Refer to page 116)*

(3) Base frequency voltage setting *(Pr. 19)*

•Use *Pr. 19 Base frequency voltage* to set the base voltage (e.g. rated motor voltage).
•If the setting is less than the power supply voltage, the maximum output voltage of the inverter is as set in *Pr. 19*.
•*Pr. 19* can be utilized in the following cases.

(a) When regeneration is high (e.g. continuous regeneration)
During regeneration, the output voltage becomes higher than the reference and may cause an overcurrent trip (E.OC☐) due to an increased motor current.

(b) When power supply voltage variation is large
When the power supply voltage exceeds the rated voltage of the motor, speed variation or motor overheat may be caused by excessive torque or increased motor current.

NOTE

- **When General-purpose magnetic flux vector control is selected, *Pr. 3, Pr. 47* and *Pr. 19* are invalid and *Pr. 83* and *Pr. 84* are valid.**
  Note that *Pr. 3* or *Pr. 47* value is valid as inflection points of S-pattern when *Pr. 29 Acceleration/deceleration pattern selection* = "1" (S-pattern acceleration/deceleration A).
- **Changing the terminal assignment using *Pr. 178 to Pr. 182 (input terminal function selection)* may affect the other functions. Make setting after confirming the function of each terminal.**

Parameters referred to

Pr. 14 Load pattern selection ☞ *Refer to page 87*
Pr. 29 Acceleration/deceleration pattern selection ☞ *Refer to page 99*
Pr. 83 Rated motor voltage, Pr. 84 Rated motor frequency ☞ *Refer to page 105*
Pr. 178 to Pr. 182 (input terminal function selection) ☞ *Refer to page 113*
General-purpose magnetic flux vector control ☞ *Refer to page 75*

上正科技有限公司
購買、維修 此手冊零組件
電話： 037-466333
Email: service@repairtw.com
Line id: @zzzz
www.repairtw.com

4.5.2 Load pattern selection (Pr. 14) V/F

Optimum output characteristic (V/F characteristic) for the application and load characteristics can be selected.

Parameter Number	Name	Initial Value	Setting Range	Description
14	Load pattern selection	0	0	For constant torque load
			1	For variable torque load
			2	For constant torque elevators (at reverse rotation boost of 0%)
			3	For constant torque elevators (at forward rotation boost of 0%)

The above parameters can be set when *Pr. 160 Extended function display selection* = "0". *(Refer to page 162)*

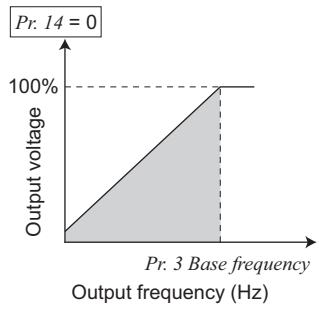

(1) Constant-torque load application (setting "0", initial value)

- At or less than the base frequency, the output voltage varies linearly with the output frequency.
- Set this value when driving the load whose load torque is constant even if the speed varies, e.g. conveyor, cart or roll drive.

POINT

If the load is a fan or pump, select for constant-torque load (setting "0") in any of the following cases.

- When a blower of large inertia moment (J) is accelerated in a short time
- For constant-torque load such as rotary pump or gear pump
- When load torque increases at low speed, e.g. screw pump

上正科技有限公司
購買、維修 IP 手冊等相關
電話： 037-466333
Email： service@repairtw.com
www.repairtw.com

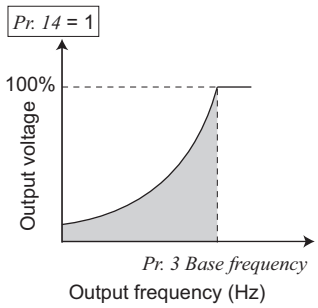

(2) Variable-torque load application (setting "1")

- At or less than the base frequency, the output voltage varies with the output frequency in a square curve.
- Set this value when driving the load whose load torque varies in proportion to the square of the speed, e.g. fan or pump.

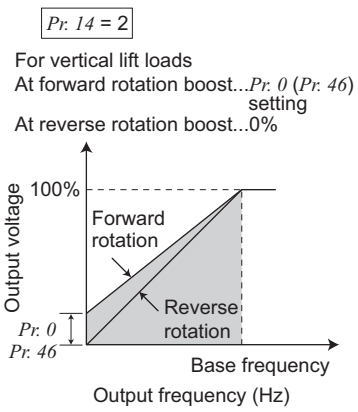

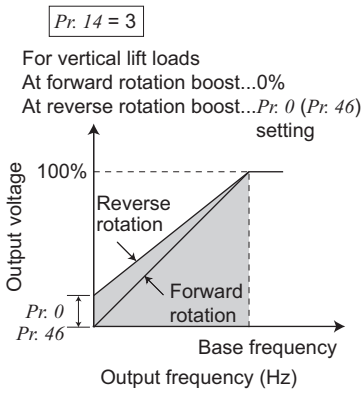

(3) Constant-torque load application (setting "2, 3")

- Set "2" when a vertical lift load is fixed as power driving load at forward rotation and regenerative load at reverse rotation.
- *Pr. 0 Torque boost* is valid during forward rotation and torque boost is automatically changed to "0%" during reverse rotation. *Pr. 46 Second torque boost* is valid when the RT signal turns on.
- Set "3" for an elevated load that is in the driving mode during reverse rotation and in the regenerative load mode during forward rotation according to the load weight, e.g. counterweight system.
- For the RT signal, set "3" in any of *Pr. 178 to Pr. 182 (input terminal function selection)* to assign the function.

REMARKS

- When torque is continuously regenerated as vertical lift load, it is effective to set the rated voltage in *Pr. 19 Base frequency voltage* to prevent trip due to current at regeneration.
- When the RT signal is on, the other second functions are also valid.

NOTE

- **Load pattern selection does not function under General-purpose magnetic flux vector control.**
- **Changing the terminal assignment using *Pr. 178 to Pr. 182 (input terminal function selection)* may affect the other functions. Make setting after confirming the function of each terminal.**

上正科技有限公司
購買、維修 此手冊零組件
電話: 037-455330
Email: service@repairtw.com
Line id: @zzzz
www.repairtw.com

Parameters referred to

Pr. 0, Pr. 46 (Torque boost) ☞ *Refer to page 73*
Pr. 3 Base frequency ☞ *Refer to page 85*
Pr. 178 to Pr. 182 (input terminal function selection) ☞ *Refer to page 113*
General-purpose magnetic flux vector control ☞ *Refer to page 75*

4.6 Frequency setting by external terminals

Purpose	Parameter that should be Set		Refer to Page
Make frequency setting by combination of terminals	**Multi-speed operation**	**Pr. 4 to Pr. 6, Pr. 24 to Pr. 27, Pr. 232 to Pr. 239**	*89*
Perform Jog operation	**Jog operation**	**Pr. 15, Pr. 16**	*91*
Infinitely variable speed setting by terminals	**Remote setting function**	**Pr. 59**	*93*

4.6.1 Operation by multi-speed operation (Pr. 4 to Pr. 6, Pr. 24 to Pr. 27, Pr. 232 to Pr. 239)

Can be used to change the preset speed in the parameter with the contact signals.
Any speed can be selected by merely turning on-off the contact signals (RH, RM, RL, REX signals).

Parameter Number	Name	Initial Value	Setting Range	Description
4	**Multi-speed setting (high speed)**	60Hz	0 to 400Hz	Frequency when RH turns on
5	**Multi-speed setting (middle speed)**	30Hz	0 to 400Hz	Frequency when RM turns on
6	**Multi-speed setting (low speed)**	10Hz	0 to 400Hz	Frequency when RL turns on
24 ∗	**Multi-speed setting (speed 4)**	9999	0 to 400Hz, 9999	Frequency from 4 speed to 15 speed can be set according to the combination of the RH, RM, RL and REX signals. 9999: not selected
25 ∗	**Multi-speed setting (speed 5)**	9999	0 to 400Hz, 9999	
26 ∗	**Multi-speed setting (speed 6)**	9999	0 to 400Hz, 9999	
27 ∗	**Multi-speed setting (speed 7)**	9999	0 to 400Hz, 9999	
232 ∗	**Multi-speed setting (speed 8)**	9999	0 to 400Hz, 9999	
233 ∗	**Multi-speed setting (speed 9)**	9999	0 to 400Hz, 9999	
234 ∗	**Multi-speed setting (speed 10)**	9999	0 to 400Hz, 9999	
235 ∗	**Multi-speed setting (speed 11)**	9999	0 to 400Hz, 9999	
236 ∗	**Multi-speed setting (speed 12)**	9999	0 to 400Hz, 9999	
237 ∗	**Multi-speed setting (speed 13)**	9999	0 to 400Hz, 9999	
238 ∗	**Multi-speed setting (speed 14)**	9999	0 to 400Hz, 9999	
239 ∗	**Multi-speed setting (speed 15)**	9999	0 to 400Hz, 9999	

The above parameters allow its setting to be changed during operation in any operation mode even if "0" (initial value) is set in *Pr. 77 Parameter write selection*.

* The above parameters can be set when *Pr. 160 Extended function display selection* = "0". *(Refer to page 162)*

上正科技有限公司
專業一維條碼手帽機
電話： 886-466338
Email: service@rena
line id: ...
www.renaitw.com

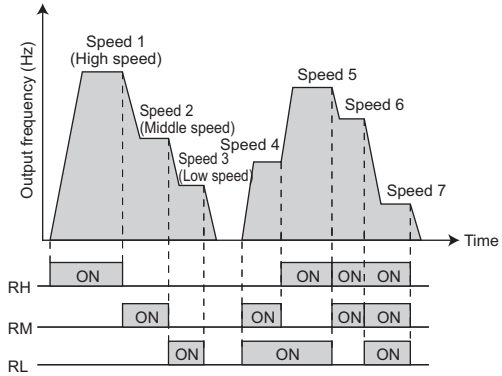

(1) 3-Speed setting *(Pr. 4 to Pr. 6)*

- The inverter operates at frequencies set in *Pr. 4* when RH signal is on, *Pr. 5* when RM signal is on and *Pr. 6* when RL signal is on.

REMARKS

- In the initial setting, if two or three of multi-speed settings are simultaneously selected, priority is given to the set frequency of the lower signal.
  For example, when the RH and RM signals turn on, the RM signal *(Pr. 5)* has a higher priority.
- The RH, RM, RL signals are assigned to the terminal RH, RM, RL in the initial setting. By setting "0 (RL)", "1 (RM)", "2 (RH)" in any of *Pr. 178 to Pr. 182 (input terminal function selection)*, you can assign the signals to other terminals.

(2) Multi-speed setting for 4th speed or more *(Pr. 24 to Pr. 27, Pr. 232 to Pr. 239)*

- Frequency from 4th speed to 15th speed can be set according to the combination of the RH, RM, RL and REX signals. Set the running frequencies in *Pr. 24 to Pr. 27, Pr. 232 to Pr. 239* (In the initial value setting, 4th speed to 15th speed are invalid).
- For the terminal used for REX signal input, set "8" in any of *Pr. 178 to Pr. 182 (input terminal function selection)* to assign the function.

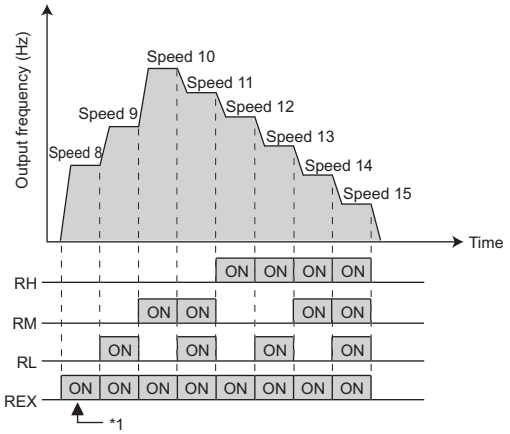

*1 When "9999" is set in *Pr. 232 Multi-speed setting (speed 8)*, operation is performed at frequency set in *Pr. 6* when RH, RM and RL are turned off and REX is turned on.

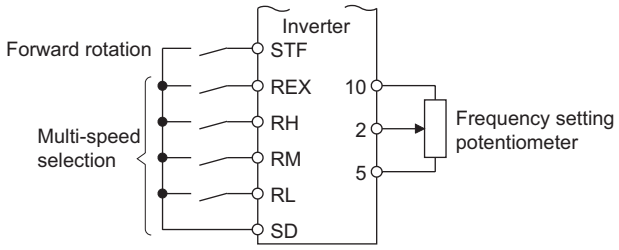

Multi-speed operation connection example

REMARKS

- The priorities of the frequency commands by the external signals are "Jog operation > multi-speed operation > terminal 4 analog input > terminal 2 analog input".
  (Refer to *page 153* for the frequency command by analog input)
- Valid in the external operation mode or PU/external combined operation mode (*Pr. 79* = "3" or "4").
- Multi-speed parameters can also be set in the PU or external operation mode.
- *Pr. 24 to Pr. 27* and *Pr. 232 to Pr. 239* settings have no priority between them.
- When *Pr. 59 Remote function selection* ≠ "0", multi-speed setting is invalid as RH, RM and RL signals are remote setting signals.

上正科技有限公司
需要維修或手機零組件
電話： 037-466333
Line id: @zzzz

NOTE

- **Changing the terminal assignment using *Pr. 178 to Pr. 182 (input terminal function selection)* may affect the other functions. Make setting after confirming the function of each terminal.**

Parameters referred to

Pr. 15 Jog frequency ☞ *Refer to page 91*
Pr. 59 Remote function selection ☞ *Refer to page 93*
Pr. 79 Operation mode selection ☞ *Refer to page 165*
Pr. 178 to Pr. 182 (input terminal function selection) ☞ *Refer to page 113*

4.6.2 Jog operation (Pr. 15, Pr. 16)

The frequency and acceleration/deceleration time for Jog operation can be set. Jog operation can be performed in either of the external and the PU operation mode.
This operation can be used for conveyor positioning, test operation, etc.

Parameter Number	Name	Initial Value	Setting Range	Description
15	Jog frequency	5Hz	0 to 400Hz	Frequency for Jog operation.
16	Jog acceleration/ deceleration time	0.5s	0 to 3600s	Acceleration/deceleration time for Jog operation. Acceleration/ deceleration time is the time taken to reach the frequency set in *Pr. 20 Acceleration/deceleration reference frequency* (initial value is 60Hz). Acceleration/deceleration time can not be set separately.

These parameters are displayed as simple mode parameter only when the parameter unit (FR-PU04/FR-PU07) is connected. When the parameter unit is not connected, the above parameters can be set by setting *Pr. 160 Extended function display selection* = "0". *(Refer to page 162)*

(1) Jog operation from outside

- When the JOG signal is on, a start and stop can be made by the start signal (STF, STR).
- For the terminal used for Jog operation selection, set "5" in any of *Pr.178 to Pr.182 (input terminal function selection)* to assign the function.

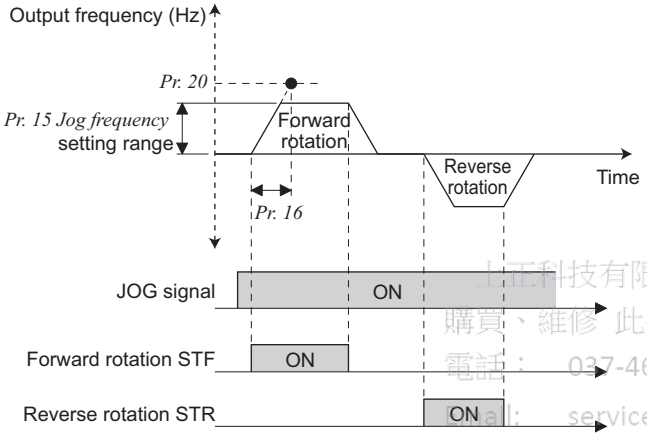

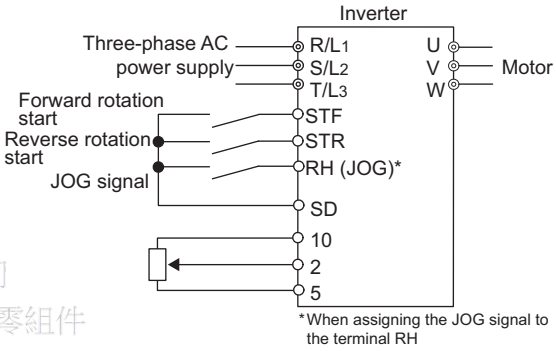

Connection diagram for external Jog operation

上正科技有限公司
購買、維修 此手冊零組件
電話： 037-466333
Email: service@repairtw.com
Line id: @zzzz
www.repairtw.com

Operation | **Display**

1. Screen at powering on
   - Confirm that the external operation mode is selected. ([EXT] lit)

     If not displayed, press PU/EXT to change to the external (EXT) operation mode. If the operation mode still does not change, set *Pr. 79* to change to the external operation mode.

2. Turn on the JOG switch.

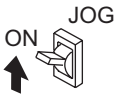

3. Turn the start switch (STF or STR) on.
   - The motor runs while the start switch (STF or STR) is on.
   - The motor runs at 5Hz. (initial value of *Pr. 15*)

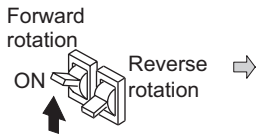

Rotates while ON

4. Turn the start switch (STF or STR) off.

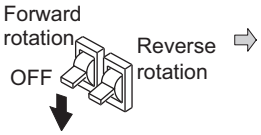

REMARKS

- When you want to change the running frequency, change *Pr. 15 Jog frequency*. (initial value "5Hz")
- When you want to change the acceleration/deceleration time, change *Pr. 16 Jog acceleration/deceleration time*. (initial value "0.5s")
  The acceleration time and deceleration time cannot be set separately for Jog operation.

(2) Jog operation from PU

•Selects Jog operation mode from the operation panel and PU (FR-PU04/FR-PU07). Operation is performed only while the start button is pressed.

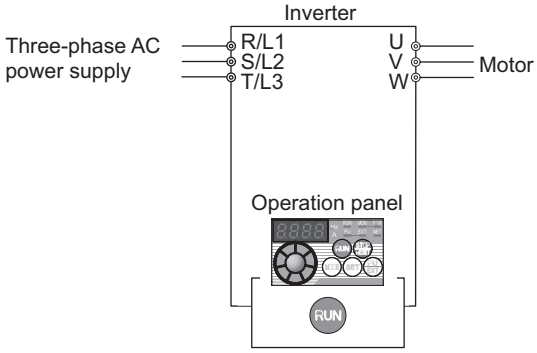

Operation | **Display**

1. Confirmation of the RUN indication and operation mode indication
   - The monitor mode should have been selected.
   - The inverter should be at a stop.

2. Press PU/EXT to choose the PU Jog operation mode.

3. Press RUN .
   - While RUN is pressed, the motor rotates.
   - The motor runs at 5Hz. (*Pr. 15* initial value)

4. Release RUN

上正科技有限公司
購買、維修 此手冊零組件
電話： 037-466333
Email: service@repairtw.com
Line id: @zzzz
www.repairtw.com

[When changing the frequency of PU Jog operation]

5. Press MODE to choose the parameter setting mode.

PRM indication is lit.

(The parameter number read previously appears.)

6. Turn ⊙ until *Pr. 15 Jog frequency* appears.

7. Press SET to show the present set value. (5Hz)

8. Turn ⊙ to set the value to " 10.00". (10Hz)

9. Press SET to set.

Flicker...Parameter setting complete!!

10. Perform the operations in steps 1 to 4.
    The motor rotates at 10Hz.

NOTE

- **When *Pr. 29 Acceleration/deceleration pattern selection* = "1" (S-pattern acceleration/deceleration A), the acceleration/deceleration time is the period of time required to reach *Pr. 3 Base frequency.***
- **The *Pr. 15* setting should be equal to or higher than the *Pr. 13 Starting frequency.***
- **The JOG signal can be assigned to the input terminal using any of *Pr. 178 to Pr. 182 (input terminal function selection)*. When terminal assignment is changed, the other functions may be affected. Please make setting after confirming the function of each terminal.**
- **During Jog operation, the second acceleration/deceleration via the RT signal cannot be selected. (The other second functions are valid. *(Refer to page 227)*)**
- **When *Pr. 79 Operation mode selection* = "4", pressing RUN of the operation panel and FWD / REV of the parameter unit (FR-PU04/FR-PU07) starts the inverter and pressing STOP RESET stops the inverter.**
- **This function is invalid when *Pr. 79* = "3".**

Parameters referred to

- *Pr. 13 Starting frequency* ☞ *Refer to page 98*
- *Pr. 29 Acceleration/deceleration pattern selection* ☞ *Refer to page 99*
- *Pr. 20 Acceleration/deceleration reference frequency, Pr. 21 Acceleration/deceleration time increments* ☞ *Refer to page 96*
- *Pr. 79 Operation mode selection* ☞ *Refer to page 165*
- *Pr. 178 to Pr. 182 (input terminal function selection)* ☞ *Refer to page 113*

4.6.3 Remote setting function (Pr. 59)

●Even if the operation panel is located away from the enclosure, you can use contact signals to perform continuous variable-speed operation, without using analog signals.

上正科技有限公司
購買、維修、出手冊零組件
電話： 037-466333
Email: sales@repairtw.com
Line id: @zzzz
www.repairtw.com

Parameter Number	Name	Initial Value	Setting Range	Description	
				RH, RM, RL signal function	Frequency setting storage function
59	Remote function selection	0	0	Multi-speed setting	—
			1	Remote setting	With
			2	Remote setting	Not used
			3	Remote setting	Not used (Turning STF/STR off clears remotely-set frequency.)

The above parameter can be set when *Pr. 160 Extended function display selection* = "0". *(Refer to page 156)*

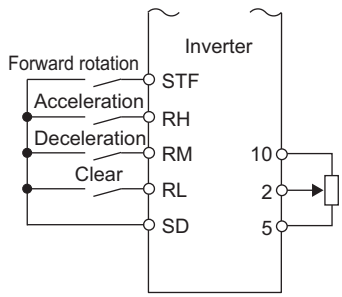

Connection diagram for remote setting

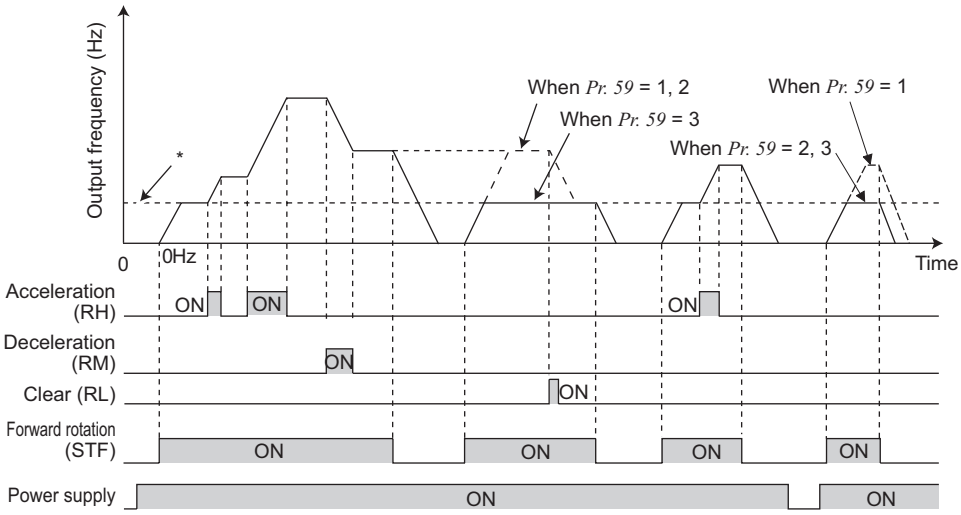

* External running frequency (other than multi-speed) or PU running frequency

(1) Remote setting function

- Use *Pr. 59* to select whether the remote setting function is used or not and whether the frequency setting storage function in the remote setting mode is used or not.
  When *Pr. 59* is set to any of "1 to 3" (remote setting function valid), the functions of the RH, RM and RL signals are changed to acceleration (RH), deceleration (RM) and clear (RL).
- When using the remote setting function, following frequencies can be compensated to the frequency set by RH and RM operation according to the operation mode.
  During external operation (including *Pr. 79* = "4") .....external frequency command other than multi-speed settings
  During external operation and PU combined operation (*Pr. 79* = "3") .....PU frequency command or terminal 4 input
  During PU operation .....PU frequency command

(2) Frequency setting storage

- The frequency setting storage function stores the remotely-set frequency (frequency set by RH/RM operation) into the memory (EEPROM). When power is switched off once, then on, operation is resumed with that output frequency value. (*Pr. 59* = 1)

<Frequency setting storage conditions>

- Frequency at the point when the start signal (STF or STR) turns off
- Remotely-set frequency is stored every minute after turning OFF (ON) the RH (acceleration) and RM(deceleration) signals together. (The frequency is overwritten if the latest frequency is different from the previous frequency when comparing the two. The state of the RH signal does not affect writing.)

NOTE

- **The range of frequency changeable by RH (acceleration) and RM (deceleration) is 0 to maximum frequency (*Pr. 1* or *Pr. 18* setting). Note that the maximum value of set frequency is (main speed + maximum frequency).**

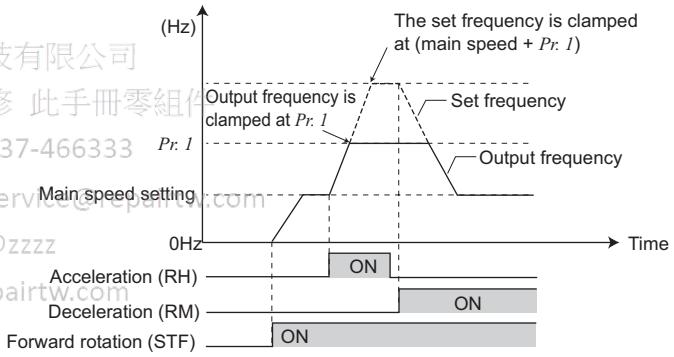

上正科技有限公司
購買、維修 此手冊零組件
電話： 037-466333
Email: service@repairtw.com
Line id: @zzzz
www.repairtw.com

- **When the acceleration or deceleration signal switches ON, acceleration/deceleration time is as set in *Pr. 44 Second acceleration/deceleration time* and *Pr. 45 Second deceleration time*. Note that when the time set in *Pr. 7 or Pr. 8* is longer than the time set in *Pr. 44 or Pr. 45*, the acceleration/deceleration time is as set in *Pr. 7 or Pr. 8*. (when RT signal is OFF)**
  When the RT signal is on, acceleration/deceleration is made in the time set in *Pr. 44* and *Pr. 45*, regardless of the *Pr. 7* or *Pr. 8* setting.
- **Even if the start signal (STF or STR) is off, turning on the acceleration (RH) or deceleration (RM) signal varies the preset frequency. (When *Pr. 59* = "1" or "2")**
- **When switching the start signal from ON to OFF, or changing frequency by the RH or RM signal frequently, set the frequency setting value storage function (write to EEPROM) invalid (*Pr. 59* = "2, 3"). If set valid (*Pr. 59* = "1"), frequency is written to EEPROM frequently, this will shorten the life of the EEPROM.**
- **The RH, RM, RL signals can be assigned to the input terminal using any *Pr. 178 to Pr. 182 (input terminal function selection)*. When terminal assignment is changed, the other functions may be affected. Please make setting after confirming the function of each terminal.**
- **Also available for the network operation mode.**

REMARKS

During Jog operation or PID control operation, the remote setting function is invalid.

Setting frequency is "0"

- Even when the remotely-set frequency is cleared by turning on the RL (clear) signal after turn off (on) of both the RH and RM signals, the inverter operates at the remotely-set frequency stored in the last operation if power is reapplied before one minute has elapsed since turn off (on) of both the RH and RM signals

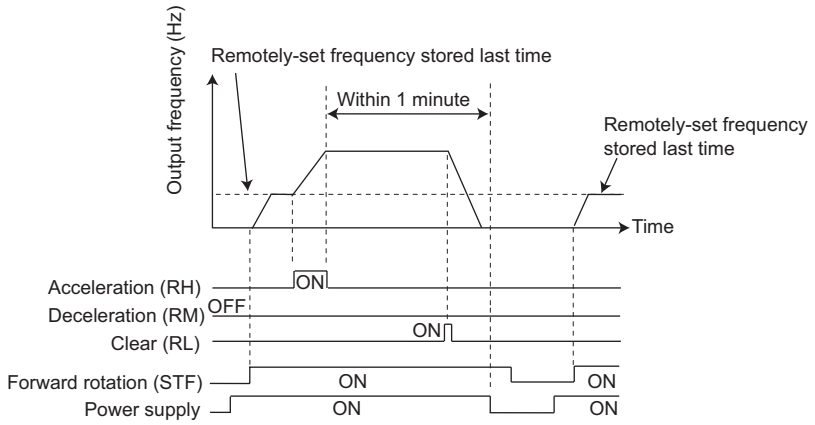

- When the remotely-set frequency is cleared by turning on the RL (clear) signal after turn off (on) of both the RH and RM signals, the inverter operates at the frequency in the remotely-set frequency cleared state if power is reapplied after one minute has elapsed since turn off (on) of both the RH and RM signals.

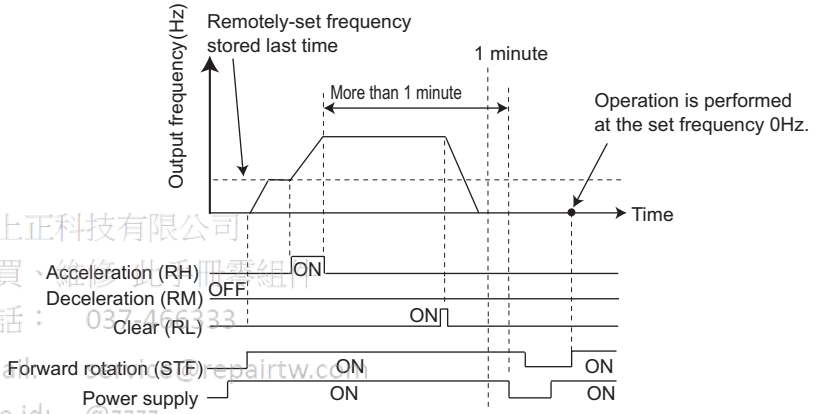

上正科技有限公司
購買、維修此型號零組件
電話： 037-462-333
Email: sales@repairtw.com
Line id: @zzzz
www.repairtw.com

CAUTION

When selecting this function, re-set the maximum frequency according to the machine.

Parameters referred to

Pr. 1 Maximum frequency, Pr. 18 High speed maximum frequency ☞ *Refer to page 83*
Pr. 7 Acceleration time, Pr. 8 Deceleration time, Pr. 44 Second acceleration/deceleration time, Pr. 45 Second deceleration time ☞ *Refer to page 96*
Pr. 178 to Pr. 182 (input terminal function selection) ☞ *Refer to page 113*

4.7 Setting of acceleration/deceleration time and acceleration/ deceleration pattern

Purpose	Parameter that should be Set		Refer to Page
Motor acceleration/deceleration time setting	Acceleration/deceleration times	Pr. 7, Pr. 8, Pr. 20, Pr. 44, Pr. 45	96
Starting frequency	Starting frequency and start-time hold	Pr. 13, Pr. 571	98
Set acceleration/deceleration pattern suitable for application	Acceleration/deceleration pattern	Pr. 29	99

4.7.1 Setting of the acceleration and deceleration time (Pr. 7, Pr. 8, Pr. 20, Pr. 44, Pr. 45)

Used to set motor acceleration/deceleration time.
Set a larger value for a slower speed increase/decrease or a smaller value for a faster speed increase/decrease.
For the acceleration time at automatic restart after instantaneous power failure, refer to *Pr. 611 Acceleration time at a restart (page 136)*.

Parameter Number	Name	Initial Value		Setting Range	Description
7	Acceleration time	FR-D720-165 or less FR-D740-080 or less FR-D720S-008 to 100	5s	0 to 3600s	Motor acceleration time.
		FR-D720-238 or more FR-D740-120 or more	10s		
8	Deceleration time	FR-D720-165 or less FR-D740-080 or less FR-D720S-008 to 100	5s	0 to 3600s	Motor deceleration time.
		FR-D720-238 or more FR-D740-120 or more	10s		
20 *1	Acceleration/ deceleration reference frequency	60Hz		1 to 400Hz	Frequency that will be the basis of acceleration/deceleration time. As acceleration/deceleration time, set the frequency change time from stop to *Pr. 20*.
44 *1	Second acceleration/ deceleration time	FR-D720-165 or less FR-D740-080 or less FR-D720S-008 to 100	5s	0 to 3600s	Acceleration/deceleration time when the RT signal is on.
		FR-D720-238 or more FR-D740-120 or more	10s		
45 *1	Second deceleration time	9999		0 to 3600s	Deceleration time when the RT signal is on.
				9999	Acceleration time = deceleration time

*1 The above parameters can be set when *Pr. 160 Extended function display selection* = "0". *(Refer to page 162)*

上正科技有限公司
編程 維修 此手冊零組件
電話: 037-466333
Email: service@repairtw.com
Line Id: @zzzz
www.repairtw.com

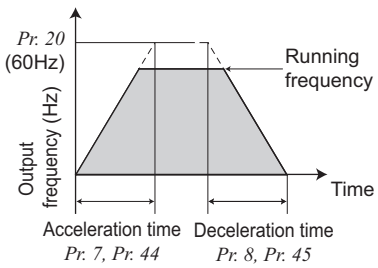

(1) Acceleration time setting *(Pr. 7, Pr. 20)*

- Use *Pr. 7 Acceleration time* to set the acceleration time required to reach *Pr. 20 Acceleration/deceleration reference frequency* from 0Hz.
- Set the acceleration time according to the following formula.

$$\text{Acceleration time setting} = \frac{Pr.\ 20}{\text{Maximum operating frequency} - Pr.\ 13} \times \text{Acceleration time from stop to maximum operating frequency}$$

Example)When *Pr. 20* = 60Hz (initial value), *Pr. 13* = 0.5Hz, and acceleration can be made up to the maximum operating frequency of 50Hz in 10s

$$Pr.\ 7 = \frac{60\text{Hz}}{50\text{Hz} - 0.5\text{Hz}} \times 10\text{s} \fallingdotseq 12.1\text{s}$$

(2) Deceleration time setting *(Pr. 8, Pr. 20)*

- Use *Pr. 8 Deceleration time* to set the deceleration time required to reach 0Hz from *Pr. 20 Acceleration/deceleration reference frequency*.
- Set the deceleration time according to the following formula.

$$\text{Deceleration time setting} = \frac{Pr.\ 20}{\text{Maximum operating frequency} - Pr.\ 10} \times \text{Deceleration time from maximum operating frequency to stop}$$

Example)When the frequency can be decelerated down to the maximum operating frequency of 50Hz in 10s with 120Hz set in *Pr. 20* and 3Hz set in *Pr. 10*

$$Pr.\ 8 = \frac{120\text{Hz}}{50\text{Hz}-3\text{Hz}} \times 10\text{s} \fallingdotseq 25.5\text{s}$$

(3) Set two kinds of acceleration/deceleration times (RT signal, *Pr. 44, Pr. 45*)

- *Pr. 44* and *Pr. 45* are valid when the RT signal is on.
- When "9999" is set to *Pr. 45*, the deceleration time becomes equal to the acceleration time *(Pr. 44)*.
- For the RT signal, set "3" in any of *Pr. 178 to Pr. 182 (input terminal function selection)* to assign the function.

NOTE

- **When the acceleration/deceleration pattern is S-pattern acceleration/deceleration A *(refer to page 99)*, the acceleration/ deceleration time is the time required to reach *Pr. 3 Base frequency*.**
- **Acceleration/deceleration time formula when the set frequency is the base frequency or higher**

$$t = \frac{4}{9} \times \frac{T}{(Pr.\ 3)^2} \times f^2 + \frac{5}{9} T$$

T: Acceleration/deceleration time setting (s)
f: Set frequency (Hz)

- **Guideline for acceleration/deceleration time at the *Pr. 3 Base frequency* of 60Hz (0Hz to set frequency)**

Acceleration/ deceleration time (s) \ Frequency setting (Hz)	60	120	200	400
5	5	12	27	102
15	15	35	82	305

上騰科技有限公司
購買、維修 此手機零組件
電話： 037-466333
Email: service@repairtw.com
Line id: @zzzz
www.repairtw.com

- **Changing terminal assignment may affect the other functions. Make setting after confirming the function of each terminal.**

REMARKS

- The RT signal acts as the second function selection signal and makes the other second functions valid. *(Refer to page 116)*
- If the *Pr. 20* setting is changed, the *Pr. 125 and Pr. 126 (frequency setting signal gain frequency)* settings do not change. Set *Pr. 125 and Pr. 126* to adjust the gains.
- When the *Pr. 7, Pr. 8, Pr. 44 and Pr. 45* settings are 0.03s or less, the acceleration/deceleration time is 0.04s. At that time, set *Pr. 20* to "120Hz" or less.
- Any value can be set to the acceleration/deceleration time, but the actual motor acceleration/deceleration time cannot be made shorter than the shortest acceleration/deceleration time determined by the mechanical system J (moment of inertia) and motor torque.

Parameters referred to

Pr. 3 Base frequency ☞ *Refer to page 85*
Pr. 10 DC injection brake operation frequency ☞ *Refer to page 109*
Pr. 29 Acceleration/deceleration pattern selection ☞ *Refer to page 99*
Pr. 125, Pr. 126 (frequency setting gain frequency) ☞ *Refer to page 153*
Pr. 178 to Pr. 182 (input terminal function selection) ☞ *Refer to page 113*

4.7.2 Starting frequency and start-time hold function (Pr. 13, Pr. 571)

You can set the starting frequency and hold the set starting frequency for a certain period of time.
Set these functions when you need the starting torque or want to smooth motor drive at a start.

Parameter Number	Name	Initial Value	Setting Range	Description
13	Starting frequency	0.5Hz	0 to 60Hz	Frequency at start can be set in the range of 0 to 60Hz. Starting frequency at which the start signal is turned on.
571	Restart coasting time	9999	0 to 10s	Holding time of *Pr. 13 Starting frequency*.
			9999	Holding function at a start is invalid

The above parameters can be set when *Pr. 160 Extended function display selection* = "0". *(Refer to page 162)*

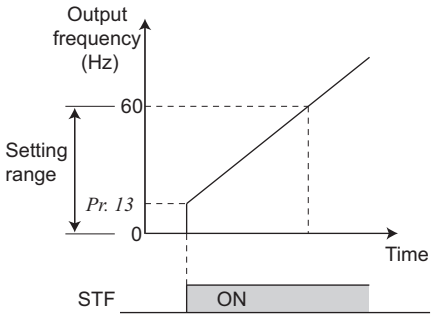

(1) Starting frequency setting *(Pr. 13)*

- Frequency at start can be set in the range of 0 to 60Hz.
- You can set the starting frequency at which the start signal is turned on.

NOTE

The inverter will not start if the frequency setting signal is less than the value set in *Pr. 13*.
For example, when 5Hz is set in *Pr. 13*, the motor will not start running until the frequency setting signal reaches 5Hz.

上正科技有限公司
購買、維修 此手冊零組件
電話: 07-466222
Email: service@repairtw.com
Line id: @zzzz
www.repairtw.com

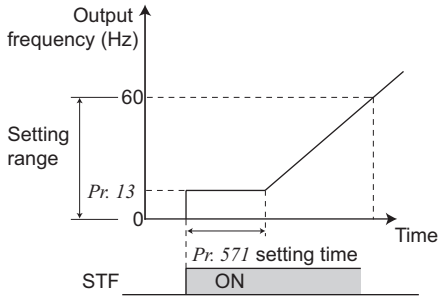

(2) Start-time hold function *(Pr. 571)*

- This function holds during the period set in *Pr. 571* and the output frequency set in *Pr. 13 Starting frequency*.
- This fnction performs initial excitation to smooth the motor drive at a start.

REMARKS

When *Pr. 13* = "0Hz", the starting frequency is held at 0.01Hz.

NOTE

- **When the start signal was turned off during start-time hold, deceleration is started at that point.**
- **At switching between forward rotation and reverse rotation, the starting frequency is valid but the start-time hold function is invalid.**

⚠ CAUTION

⚠ Note that when *Pr. 13* is set to any value equal to or lower than *Pr. 2 Minimum frequency*, simply turning on the start signal will run the motor at the preset frequency even if the command frequency is not input.

Parameters referred to

Pr. 2 Minimum frequency ☞ *Refer to page 83*

4.7.3 Acceleration/deceleration pattern (Pr. 29)

You can set the acceleration/deceleration pattern suitable for application.

Parameter Number	Name	Initial Value	Setting Range	Description
29	Acceleration/deceleration pattern selection	0	0	Linear acceleration/ deceleration
			1	S-pattern acceleration/deceleration A
			2	S-pattern acceleration/deceleration B

The above parameters can be set when *Pr. 160 Extended function display selection* ="0". *(Refer to page 162)*

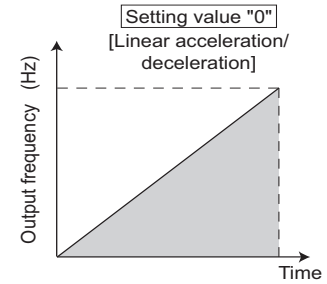

(1) Linear acceleration/deceleration (*Pr. 29* setting "0", initial value)

•For the inverter operation, the output frequency is made to change linearly (linear acceleration/deceleration) to prevent the motor and inverter from getting excessive stress to reach the set frequency during acceleration, deceleration, etc. when frequency changes. Linear acceleration/deceleration has a uniform frequency/time slope.

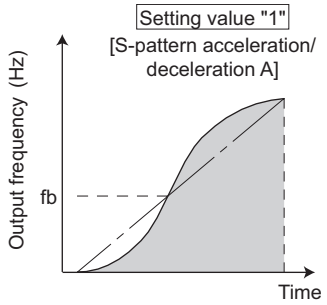

(2) S-pattern acceleration/deceleration A (*Pr. 29* = "1")

•For machine tool spindle applications, etc.

Use this pattern when acceleration/deceleration is required in a short time to a high-speed range higher than the base frequency.

In this acceleration/deceleration pattern, *Pr. 3 Base frequency* (fb) is the inflection point of the S pattern, and you can set the acceleration/deceleration time appropriate for motor torque reduction in a constant-power operation range of base frequency (fb) or higher.

上正科技有限公司
購買、維修、供手冊零組件
電話： 037-466333
Email: service@repairtw.com
地址：臺灣
www.repairtw.com

NOTE

- **As the acceleration/deceleration time of S-pattern acceleration/deceleration A, set the time taken until *Pr. 3 Base frequency* is reached, not *Pr. 20 Acceleration/deceleration reference frequency*.**

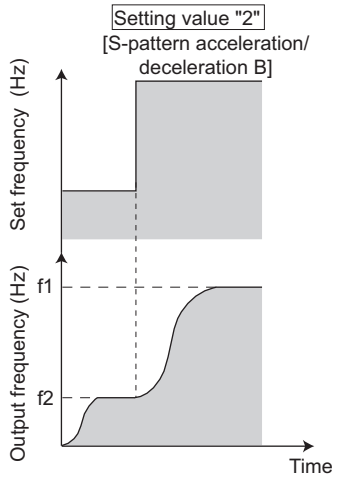

(3) S-pattern acceleration/deceleration B (*Pr. 29* = "2")

•For prevention of load shifting in conveyor and other applications.

Since acceleration/deceleration is always made in an S shape from current frequency (f2) to target frequency (f1), this function eases shock produced at acceleration/deceleration and is effective for load collapse prevention, etc.

Parameters referred to

Pr. 3 Base frequency ☞ *Refer to page 85*

Pr. 7 Acceleration time, Pr. 8 Deceleration time, Pr. 20 Acceleration/deceleration reference frequency ☞ *Refer to page 96*

4.8 Selection and protection of a motor

Purpose	Parameter that should be Set		Refer to Page
Motor protection from overheat	**Electronic thermal O/L relay PTC thermistor protection**	**Pr. 9, Pr. 51, Pr. 561**	*100*
Use the constant torque motor	**Applied motor**	**Pr. 71**	*103*
The motor performance can be maximized for operation in magnetic flux vector control method.	**Offline auto tuning**	**Pr. 71, Pr. 80, Pr. 82 to Pr. 84, Pr. 90, Pr. 96**	*105*

4.8.1 Motor overheat protection (Electronic thermal O/L relay, PTC thermistor protection) (Pr. 9, Pr. 51, Pr. 561)

Set the current of the electronic thermal relay function to protect the motor from overheat. This feature provides the optimum protective characteristics, including reduced motor cooling capability, at low speed.

Parameter Number	Name	Initial Value	Setting Range	Description
9	**Electronic thermal O/L relay**	Inverter rated current	0 to 500A	Set the rated motor current.
51∗1	**Second electronic thermal O/L relay** ∗2	9999	0 to 500A	Valid when the RT signal is on. Set the rated motor current.
			9999	Second electronic thermal O/L relay invalid
561∗1	**PTC thermistor protection level**	9999	0.5 to 30kΩ	Set the level (resistance value) for PTC thermistor protection activates.
			9999	PTC thermistor protection is inactive.

∗1 The above parameters can be set when *Pr. 160 Extended function display selection* = "0". *(Refer to page 162)*

∗2 When parameter is read using the FR-PU04, a parameter name different from an actual parameter is displayed.

上正科技有限公司
購買、維修、出租、回收
電話： 037-466333
Email: service@repairtw.com
Line id: @zzzz
www.repairtw.com

(1) Electronic thermal O/L relay *(Pr. 9)*

Electronic thermal O/L relay operation characteristic

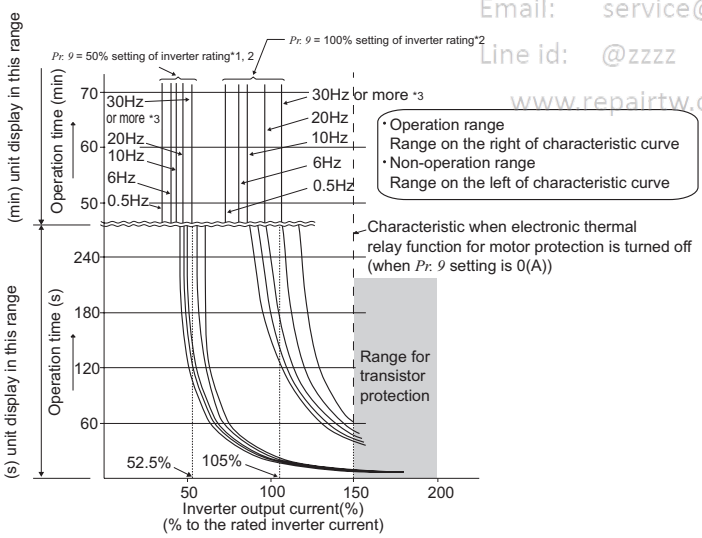

This function detects the overload (overheat) of the motor and trips. (The operation characteristic is shown on the left)

- Set the rated current (A) of the motor in *Pr. 9*.
  (If the motor has both 50Hz and 60Hz rating and the *Pr. 3 Base frequency* is set to 60Hz, set the 1.1 times of the 60Hz rated motor current.)
- Set "0" in *Pr. 9* when you do not want to operate the electronic thermal O/L relay, e.g. when using an external thermal relay with the motor. (Note that the output transistor protection of the inverter functions (E.THT).)
- When using a Mitsubishi constant-torque motor
  1) Set "1" or "13", "50", "53" in any of *Pr. 71*. (This provides a 100% continuous torque characteristic in the low-speed range.
  2) Set the rated current of the motor in *Pr. 9*.

∗1 When 50% of the inverter rated output current (current value) is set to *Pr. 9*

∗2 The % value denotes the percentage to the inverter rated output current. It is not the percentage to the motor rated current.

∗3 When you set the electronic thermal O/L relay dedicated to the Mitsubishi constant-torque motor, this characteristic curve applies to operation at 6Hz or higher.

NOTE

- **The protective function performed by the electronic thermal O/L relay is reset by inverter power reset and reset signal input. Avoid unnecessary reset and power-off.**
- **When multiple motors are operated by a single inverter, protection cannot be provided by the electronic thermal function. Install an external thermal relay to each motor.**
- **When the difference between the inverter and motor capacities is large and the setting is small, the protective characteristics of the electronic thermal relay function will be deteriorated. In this case, use an external thermal relay.**
- **A special motor cannot be protected by the electronic thermal relay function. Use an external thermal relay.**
- **The operation time of the transistor protection thermal shortens when the *Pr. 72 PWM frequency selection* setting value increases.**
- **Electronic thermal relay does not function when 5% or less of inverter rated current is set to electronic thermal relay setting.**

(2) Set two different electronic thermal O/L relays *(Pr. 51)*

Use this function when running two motors of different rated currents individually by a single inverter. (When running two motors together, use external thermal relays.)

•Set the rated current of the second motor to *Pr. 51*.

•When the RT signal is on, thermal protection is provided based on the *Pr. 51* setting.

•For the terminal used for RT signal input, set "3" in any of *Pr. 178 to Pr. 182 (input terminal function selection)* to assign the function.

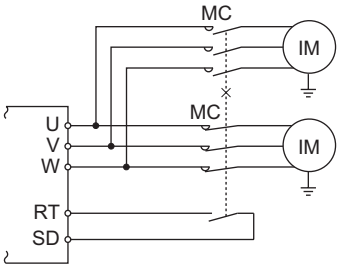

Pr. 450 Second applied motor	*Pr. 9 Electronic thermal O/L relay*	*Pr.51 Second electronic thermal O/L relay*	RT = OFF		RT = ON	
			First motor	Second motor	First motor	Second motor
9999	0	9999	×	×	×	×
		0	×	×	×	×
		0.01 to 500	×	Δ	×	○
9999	Other than 0	9999	○	×	○	×
		0	○	×	Δ	×
		0.01 to 500	○	Δ	Δ	○
Other than 9999	0	9999	×	×	×	×
		0	×	×	×	×
		0.01 to 500	×	Δ	×	○
Other than 9999	Other than 0	9999	○	Δ	Δ	○
		0	○	×	Δ	×
		0.01 to 500	○	Δ	Δ	○

○... Output current value is used to perform integration processing.
Δ... Output current is assumed as 0A to perform integration processing. (cooling processing)
×... Electronic thermal relay function is not activated.

REMARKS

- The RT signal acts as the second function selection signal and makes the other second functions valid. *(Refer to page 116)*

(3) Electronic thermal relay function prealarm (TH) and alarm signal (THP signal)

上正科技有限公司
購買、維修 此手冊零組件
電話： 037-466333
Email: service@repairtw.com
Line id: @zzzz
www.repairtw.com

100%: Electronic thermal O/L relay alarm operation value

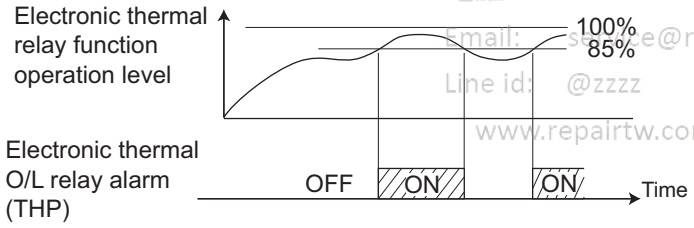

- The alarm signal (THP) is output and electronic thermal relay function prealarm (TH) is displayed when the electronic thermal O/L relay cumulative value reaches 85% of the level set in *Pr. 9 or Pr. 51*. If it reaches 100% of the *Pr. 9 Electronic thermal O/L relay* setting electronic-thermal relay protection (E.THM/E.THT) occurs.
- The inverter does not trip even when the alarm signal (THP) is output.
- For the terminal used for the THP signal output, assign the function by setting "8 (positive logic) or 108 (negative logic)" in *Pr. 190 or Pr. 192 (output terminal function selection)* .

NOTE

- **Changing the terminal assignment using *Pr.190, Pr.192 (output terminal function selection)* may affect the other functions. Make setting after confirming the function of each terminal.**

(4) External thermal relay input (OH signal)

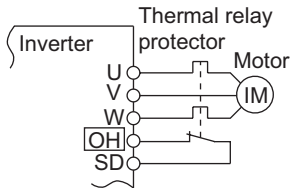

External thermal relay input connection example

- To protect the motor against overheat, use the OH signal when using an external thermal relay or the built-in thermal protector of the motor.
- When the thermal relay operates, the inverter trips and outputs the fault signal (E.OHT).
- For the terminal used for OH signal input, assign the function by setting "7" in any of *Pr. 178 to Pr.182 (input terminal function selection)* .

NOTE

- **Changing the terminal assignment using *Pr. 178 to Pr. 182 (input terminal function selection)* may affect the other functions. Make setting after confirming the function of each terminal.**

(5) PTC thermistor protection (Pr. 561)

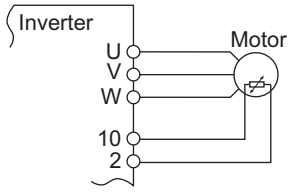

PTC thermistor input connection

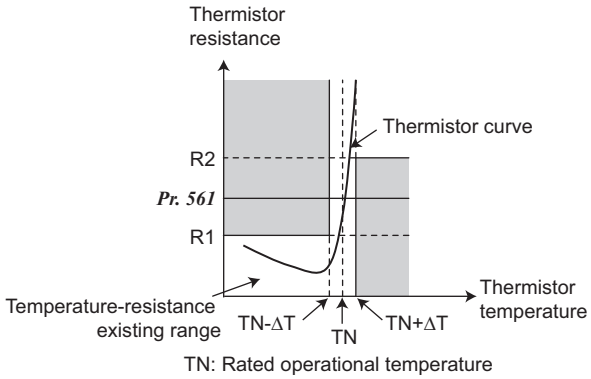

PTC thermistor characteristics

- Terminal 2 and terminal 10 are available for inputting of motor built-in PTC thermistor output. When the PTC thermistor input reaches to the resistance value set in *Pr. 561 PTC thermistor protection level*, inverter outputs PTC thermistor operation error signal (E.PTC) and trips.
- Check the characteristics of the using PTC thermistor, and set the resistance value within a protection providing temperature TN, just around the center of R1 and R2 in a left figure. If the *Pr. 561* setting is closer to R1 or R2, the working temperature of protection goes higher (protection works later), or lower (protection works earlier).
- PTC thermistor resistance can be displayed in operation panel, parameter unit (FR-PU07) *(Refer to page 128)*, or RS-485 communication *(Refer to page 180)* when PTC thermistor protection is active (*Pr. 561* ≠ "9999").

REMARKS

- When using terminal 2 as PTC thermistor input (*Pr. 561* ≠ "9999"), terminal 2 is not available for analog frequency command. Also unavailable when using terminal 2 for PID control and Dancer control. When PID control and Dancer control is not active (*Pr. 128 PID action selection* = "0"), terminal 4 functions as follows.
  When *Pr. 79* = "4" or in external operation mode ..... Terminal 4 is active whether AU signal is ON/OFF
  When *Pr. 79* = "3" ..... Terminal 4 is active for frequency command when AU signal is ON
- For the power supply terminal of PTC thermistor input, do not use power supply other than terminal 10 (external power supply, etc). PTC thermistor does not work properly.

上位科技有限公司
購買・維修 此手冊零組件
電話： 037-466828
Email: service@repairtw.com
Line id: @zzzz
www.repairtw.com

Parameters referred to

Pr. 71 Applied motor ☞ *Refer to page 103*
Pr. 72 PWM frequency selection ☞ *Refer to page 148*
Pr. 79 Operation mode selection ☞ *Refer to page 165*
Pr. 128 PID action selection ☞ *Refer to page 212*
Pr. 178 to Pr. 182 (input terminal function selection) ☞ *Refer to page 113*
Pr. 190, Pr. 192 (output terminal function selection) ☞ *Refer to page 119*

4.8.2 Applied motor (Pr. 71, Pr. 450)

Setting of the used motor selects the thermal characteristic appropriate for the motor.
Setting is required to use a constant-torque motor. Thermal characteristic of the electronic thermal relay function suitable for the motor is set.
When General-purpose magnetic flux vector is selected, the motor constants (SF-JR, SF-HR, SF-JRCA, SF-HRCA, etc.) necessary for control are selected as well.

Parameter Number	Name	Initial Value	Setting Range	Description
71	Applied motor	0	0, 1, 3, 13, 23, 40, 43, 50, 53	Selecting the standard motor or constant-torque motor sets the corresponding motor thermal characteristic.
450	Second applied motor	9999	0, 1	Set when using the second motor.
			9999	Second motor is invalid. (thermal characteristic of the first motor (*Pr. 71*))

The above parameters can be set when *Pr. 160 Extended function display selection* = "0". *(Refer to page 162)*

(1) Set the motor to be used

Refer to the following list and set the parameter according to the motor used.

Pr. 71 (Pr. 450) Setting		Thermal Characteristic of the Electronic Thermal Relay Function		Motor (O: Used motor)	
Pr. 71	*Pr. 450*			Standard (SF-JR, etc.)	Constant torque (SF-JRCA, etc.)
0 (*Pr. 71* initial value)		Thermal characteristics of a standard motor		O	
1		Thermal characteristics of the Mitsubishi constant-torque motor			O
40	—	Thermal characteristic of Mitsubishi high efficiency motor (SF-HR)		O *1	
50	—	Thermal characteristic of Mitsubishi constant torque motor (SF-HRCA)			O *2
3	—	Standard motor	Select "Offline auto tuning setting"	O	
13	—	Constant-torque motor			O
23	—	Mitsubishi standard motor (SF-JR 4P 1.5kW or less)		O	
43	—	Mitsubishi high efficiency motor (SF-HR)		O *1	
53	—	Mitsubishi constant-torque motor (SF-HRCA)			O *2
—	9999 (initial value)	Without second applied motor			

*1 Motor constants of Mitsubishi high efficiency motor SF-HR.
*2 Motor constants of Mitsubishi constant-torque motor SF-HRCA.

電話： 037-466333
Email: service@repairtw.com
www.repairtw.com

REMARKS

- When performing offline auto tuning, set any of "3, 13, 23, 43, 53" in *Pr. 71*.
  (Refer to *page 105* for offline auto tuning.)
- For the FR-D720-238 and 318, FR-D740-120 and 160, the *Pr. 0 Torque boost* and *Pr. 12 DC injection brake operation voltage* settings are automatically changed according to the *Pr. 71* setting as follows.

Automatic Change Parameter	Standard Motor Setting *1	Constant-torque Motor Setting *2
Pr. 0	3%	2%
Pr. 12	4%	2%

*1 *Pr. 71* setting: 0, 3, 23, 40, 43
*2 *Pr. 71* setting: 1, 13, 50, 53

(2) Use two motors *(Pr. 450)*

- Set *Pr. 450 Second applied motor* to use two different motors with one inverter.
- When "9999" (initial value) is set, no function is selected.
- When a value other than 9999 is set in *Pr. 450*, the second motor is valid with the RT signal on.
- For the RT signal, set "3" in any of *Pr. 178 to Pr. 182 (input terminal function selection)* to assign the function.

REMARKS

- The RT signal acts as the second function selection signal and makes the other second functions valid. *(Refer to page 116)*

NOTE

- **Changing the terminal assignment using *Pr. 178 to Pr. 182 (input terminal function selection)* may affect other functions. Make setting after confirming the function of each terminal.**

CAUTION

Set this parameter correctly according to the motor used.
Incorrect setting may cause the motor to overheat and burn.
Set the electronic thermal relay function to the thermal characteristic for the constant-torque motor when using a geared motor (GM-G, GM-D, GM-SY, GM-HY2 series) to perform General-purpose magnetic flux vector control.

Parameters referred to

Pr. 0 Torque boost *Refer to page 73*
Pr. 12 DC injection brake operation voltage *Refer to page 109*
Pr. 80 Motor capacity *Refer to page 105*

上可科技有限公司
購買、維修 此手冊零組件
電話： 037-466333
Email: service@repairtw.com
Line id: @zzzz
www.repairtw.com

4.8.3 To exhibit the best performance of the motor (offline auto tuning) (Pr. 71, Pr. 80, Pr. 82 to Pr. 84, Pr. 90, Pr. 96)

The motor performance can be maximized with offline auto tuning.

●What is offline auto tuning?

When performing General-purpose magnetic flux vector control, the motor can be run with the optimum operating characteristics by automatically measuring the motor constants (offline auto tuning) even when each motor constants differs, other manufacturer's motor is used, or the wiring length is long.

Parameter Number	Name	Initial Value	Setting Range	Description
71	**Applied motor**	0	0, 1, 3, 13, 23, 40, 43, 50, 53	By selecting a standard motor or constant-torque motor, thermal characteristic and motor constants of each motor are set.
80	**Motor capacity**	9999	0.1 to 7.5kW	Applied motor capacity.
			9999	V/F control
82	**Motor excitation current**	9999	0 to 500A	Set motor excitation current (no load current)
			9999	Uses the Mitsubishi motor (SF-JR, SF-HR, SF-JRCA, SF-HRCA) constants.
83	**Rated motor voltage**	200V class: 200V 400V class: 400V	0 to 1000V	Rated motor voltage (V).
84	**Rated motor frequency**	60Hz	10 to 120Hz	Rated motor frequency (Hz).
90	**Motor constant (R1)**	9999	0 to 50Ω, 9999	Tuning data (The value measured by offline auto tuning is automatically set.) 9999: Uses the Mitsubishi motor (SF-JR, SF-HR, SF-JRCA, SF-HRCA) constants.
96	**Auto tuning setting/ status**	0	0	Offline auto tuning is not performed.
			11	For General-purpose magnetic flux vector control Offline auto tuning is performed without motor running. (motor constant (R1) only)
			21	Offline auto tuning for V/F control (automatic restart after instantaneous power failure (with frequency search)) *(Refer to page 139)*

The above parameters can be set when *Pr. 160 Extended function display selection* = "0". *(Refer to page 162)*

上正科技有限公司
購買、維修 此手冊零組件
電話： 037-466333
Email: service@repairtw.com
Line id: @zzzz
www.repairtw.com

POINT

- This function is valid only when a value other than "9999" is set in *Pr. 80* and General-purpose magnetic flux vector control is selected.
- You can copy the offline auto tuning data (motor constants) to another inverter with the PU (FR-PU07).
- Even when motors (other manufacturer's motor, SF-JRC, etc.) other than Mitsubishi standard motor, high efficiency motor (SF-JR, SF-HR 0.2kW or more), and Mitsubishi constant-torque motor (SF-JRCA four-pole, SF-HRCA 0.4kW to 7.5kW) are used or the wiring length is long, using the offline auto tuning function runs the motor with the optimum operating characteristics.
- Tuning is enabled even when a load is connected to the motor.
  As the motor may run slightly, fix the motor securely with a mechanical brake or make sure that there will be no problem in safety if the motor runs (caution is required especially in elevator). Note that tuning performance is unaffected even if the motor runs slightly.
- Reading/writing/copy of motor constants *(Pr. 90)* tuned by offline auto tuning are enabled.
- The offline auto tuning status can be monitored with the operation panel and PU (FR-PU04/FR-PU07).
- Do not connect a surge voltage suppression filter (FR-ASF-H/FR-BMF-H) between the inverter and motor.

(1) Before performing offline auto tuning

Check the following before performing offline auto tuning.

- Make sure General-purpose magnetic flux vector control (*Pr. 80*) is selected. (Tuning can be performed even under V/F control selected by turning on X18.)
- A motor should be connected. Note that the motor should be at a stop at a tuning start.
- The motor capacity should be equal to or one rank lower than the inverter capacity. (note that the capacity should be 0.1kW or more)
- The maximum frequency is 120Hz.
- A high-slip motor, high-speed motor and special motor cannot be tuned.
- As the motor may run slightly, fix the motor securely with a mechanical brake or make sure that there will be no problem in safety if the motor runs (caution is required especially in elevator). Note that tuning performance is unaffected even if the motor runs slightly.
- Offline auto tuning will not be performed properly if it is performed with a reactor or surge voltage suppression filter (FR-ASF-H/FR-BMF-H) connected between the inverter and motor. Remove it before start tuning.

(2) Setting

1) Select General-purpose magnetic flux vector control (*Refer to page 75*).
2) Set "11" in *Pr. 96 Auto tuning setting/status*.
   Tuning motor constants (R1) only without running the motor. (It takes approximately 9s until tuning is completed.)
3) Set the rated motor current (initial value is rated inverter current) in *Pr. 9 Electronic thermal O/L relay*. (*Refer to page 100*)
4) Set the rated voltage of motor (initial value is 200V/400V) in *Pr. 83 Rated motor voltage* and rated motor frequency (initial value is 60Hz) in *Pr. 84 Rated motor frequency*.
   (For a Japanese standard motor, etc. which has both 50Hz and 60Hz rated values, use it with an initial value (200V/60Hz or 400V/60Hz).
5) Set *Pr. 71 Applied motor* according to the motor used.

Motor		*Pr. 71* Setting
Mitsubishi standard motor Mitsubishi high efficiency motor	SF-JR	3
	SF-JR 4P 1.5kW or less	23
	SF-HR	43
	Others	3
Mitsubishi constant-torque motor	SF-JRCA 4P	13
	SF-HRCA	53
	Others (SF-JRC, etc.)	13
Other standard motor	—	3
Other constant-torque motor	—	13

上正科技有限公司
購買、維修 此手冊電子件
電話： 037-466333
Email: service@repairtw.com
Line id: @zzzz
www.repairtw.com

(3) Execution of tuning

POINT

Before performing tuning, check the monitor display of the operation panel or parameter unit (FR-PU04/FR-PU07) if the inverter is in the status for tuning. (Refer to 2) below) When the start command is turned on under V/F control, the motor starts.

1) When performing tuning for PU operation, press RUN of the operation panel or FWD or REV of the parameter unit (FR-PU04/FR-PU07).
For external operation, turn ON the run command (STF signal or STR signal). Tuning starts.
(Excitation noise is produced during tuning.)

NOTE

- **To force tuning to end, use the MRS or RES signal or press STOP/RESET of the operation panel. (Turning the start signal (STF signal or STR signal) OFF also ends tuning.)**
- **During offline auto tuning, only the following I/O signals are valid: (initial value)**
  - **Input terminal <valid signal> STF, STR**
  - **Output terminal RUN, AM, A, B, C**

  Note that the progress status of offline auto tuning is output in five steps from AM when speed and output frequency are selected.
- **Since the RUN signal turns ON when tuning is started, caution is required especially when a sequerence which releases a mechanical brake by the RUN signal has been designed.**
- **When executing offline auto tuning, input the run command after switching on the main circuit power (R/L1, S/L2, T/L3) of the inverter.**
- **Do not perform ON/OFF switching of the second function selection signal (RT) during execution of offline auto tuning. Auto tuning is not excecuted properly.**

上正科技有限公司
購買、維修 此手冊零組件
電話： 037-466333
Email: service@repairtw.com
Line id: @zzzz
www.repairtw.com

2) Monitor is displayed on the operation panel and parameter unit (FR-PU04/FR-PU07) during tuning as below.

	Parameter Unit (FR-PU04/FR-PU07) Display	Operation Panel Indication
Pr. 96 setting	11	11
(1) Setting	READ:List 11 - - - STOP PU	11 MON EXT
(2)Tuning in progress	TUNE 12 STF FWD PU	12 RUN MON EXT
(3)Normal end	TUNE 13 COMPETION STF STOP PU	Flickering 13 RUN MON EXT
(4)Error end (when inverter protective function operation is activated)	TUNE 9 ERROR STF STOP PU	9 RUN MON EXT

REMARKS

- It takes approximately 9s until tuning is completed.
- The set frequency monitor displayed during the offline auto tuning is 0Hz.

3) When offline auto tuning ends, press (STOP RESET) of the operation panel during PU operation. For external operation, turn OFF the start signal (STF signal or STR signal) once.
This operation resets the offline auto tuning and the PU's monitor display returns to the normal indication.
(Without this operation, next operation cannot be started.)

4) If offline auto tuning ended in error (see the table below), motor constants are not set.
Perform an inverter reset and restart tuning.

Error Display	Error Cause	Remedy
8	Forced end	Set "11" in *Pr. 96* and perform tuning again.
9	Inverter protective function operation	Make setting again.
91	Current limit (stall prevention) function was activated.	Set "1" in *Pr. 156*.
92	Converter output voltage reached 75% of rated value.	Check for fluctuation of power supply voltage.
93	Calculation error A motor is not connected.	Check the motor wiring and make setting again. Set the rated current of the motor in *Pr. 9*.

5) When tuning is ended forcibly by pressing (STOP RESET) or turning OFF the start signal (STF or STR) during tuning, offline auto tuning does not end normally. (The motor constants have not been set.)
Perform an inverter reset and restart tuning.

6) When using the motor corresponding to the following specifications and conditions, reset *Pr.9 Electronic thermal O/L relay* as below after tuning is completed.
   a) When the rated power specifications of the motor is 200/220V(400/440V) 60Hz, set 1.1 times rated motor current value in *Pr.9*.
   b) When performing motor protection from overheat using a PTC thermistor or motor with temperature detector such as Klixon, set "0" (motor overheat protection by the inverter is invalid) in *Pr.9*.

7) When you know motor excitation current (no load current), set the value in *Pr. 82 Motor excitation current*.

上海欧姆龙代理商
銷售 維修 配件 備零組件
電話： 037-466333
Email: service@repairtw.com
Website:
www.repairtw.com

NOTE

- **The motor constants measured once in the offline auto tuning are stored as parameters, and their data are held until the offline auto tuning is performed again.**
- **An instantaneous power failure occurring during tuning will result in a tuning error.**
  After power is restored, the inverter goes into the normal operation mode. Therefore, when STF (STR) signal is ON, the motor runs in the forward (reverse) rotation.
- **Any alarm occurring during tuning is handled as in the ordinary mode. Note that if a fault retry has been set, retry is ignored.**

⚠ CAUTION

⚠ As the motor may run slightly during offline auto tuning, fix the motor securely with a mechanical brake or make sure that there will be no problem in safety if the motor runs. Note that if the motor runs slightly, tuning performance is unaffected.

Parameters referred to

Pr. 9 Electronic thermal O/L relay ☞ *Refer to page 100*
Pr. 71 Applied motor ☞ *Refer to page 100*
Pr. 80 Motor capacity ☞ *Refer to page 75*
Pr. 156 Stall prevention operation selection ☞ *Refer to page 79*
Pr. 178 to Pr. 182 (input terminal function selection) ☞ *Refer to page 113*
Pr. 190, Pr. 192 (output terminal function selection) ☞ *Refer to page 119*

4.9 Motor brake and stop operation

Purpose	Parameter that should be Set		Refer to Page
Motor braking torque adjustment	**DC Injection brake**	**Pr. 10 to Pr. 12**	*109*
Improve the motor braking torque with an option	**Selection of a regenerative brake**	**Pr. 30, Pr. 70**	*110*
Coast the motor to a stop	**Selection of motor stopping method**	**Pr. 250**	*112*

4.9.1 DC injection brake (Pr. 10 to Pr. 12)

The DC injection brake can be operated at a motor stop to adjust the stop timing and braking torque.
In DC injection brake operation, DC voltage is directly applied to the motor to prevent the motor shaft from rotating. The motor will not return to the original position if the motor shaft rotates due to external force.

Parameter Number	Name	Initial Value		Setting Range	Description
10	**DC injection brake operation frequency**	3Hz		0 to 120Hz	Operation frequency of the DC injection brake.
11	**DC injection brake operation time**	0.5s		0	DC injection brake disabled
				0.1 to 10s	Operation time of the DC injection brake.
12	**DC injection brake operation voltage**	FR-D720-008 and 014 FR-D720S-008 and 014	6%	0 to 30%	DC injection brake voltage (torque). When "0" is set, DC injection brake is disabled.
		FR-D720-025 to 318 FR-D740-012 to 160 FR-D720S-025 to 100	4%		

The above parameters can be set when *Pr. 160 Extended function display selection* ="0". *(Refer to page 162)*

上正科技有限公司
購買、維修、此手冊零組件
電話： 886-4-23595
Email: service@repairtw.com
Line id: @repairtw
www.repairtw.com

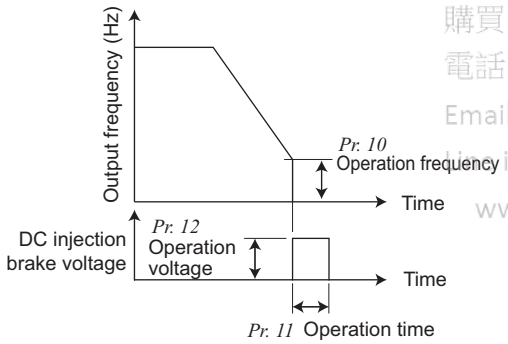

(1) Operation frequency setting *(Pr. 10)*

- When the frequency at which the DC injection brake will be operated is set to *Pr. 10*, the DC voltage is applied to the motor upon reaching to the set frequency during deceleration.

(2) Operation time setting *(Pr. 11)*

- In *Pr. 11*, set the time of the DC injection brake.
- When the motor does not stop due to large load moment (J), increasing the setting produces an effect.
- When *Pr. 11* = "0s", the DC injection brake is disabled. (At a stop, the motor coasts.)

(3) Operation voltage (torque) setting *(Pr. 12)*

- Use *Pr. 12* to set the percentage to the power supply voltage.
- When *Pr. 12* = "0%", the DC injection brake is disabled. (At a stop, the motor coasts.)
- When using the constant-torque motor (SF-JRCA) and energy saving motor (SF-HR, SF-HRCA), change the *Pr. 12* setting as follows:

  SF-JRCA:
  FR-D720-165 or less, FR-D740-080 or less, FR-D720S-100 or less...4%
  FR-D720-238 or more, FR-D740-120 or more...2%
  SF-HR, SF-HRCA:
  FR-D720-165 or less, FR-D740-080 or less, FR-D720S-100 or less...4%
  FR-D720-238 or more, FR-D740-120 or more...3%

REMARKS

- For the FR-D720-238 and 318, FR-D740-120 and 160, when the *Pr. 12* setting is the following, changing the *Pr. 71 Applied motor* setting automatically changes the *Pr. 12* setting. Therefore, it is not necessary to change the *Pr. 12* setting.
  (a) When 4% (initial value) is set in *Pr. 12*
  The *Pr. 12* setting is automatically changed to 2% if the *Pr. 71* value is changed from the value selecting the standard motor (0, 3, 23, 40, 43) to the value selecting the constant torque motor (1, 13, 50, 53).
  (b) When 2% is set in *Pr. 12*
  The *Pr. 12* setting is automatically changed to 4% (initial value) if the *Pr. 71* value is changed from the value selecting the constant-torque motor (1, 13, 50, 53) to the value selecting the standard motor (0, 3, 23, 40, 43).
- Even if the value of *Pr. 12* setting is increased, braking torque is limited so that the output current is within the rated inverter current.

CAUTION

As stop holding torque is not produced, install a mechanical brake.

Parameters referred to

Pr. 13 Starting frequency *Refer to page 98*
Pr. 71 Applied motor *Refer to page 103*

4.9.2 Selection of a regenerative brake (Pr. 30, Pr. 70)

- When making frequent starts/stops, use the optional brake resistor (MRS type, MYS type), high-duty brake resistor (FR-ABR) and brake unit (FR-BU2) to increase the regenerative brake duty.
- Use a power regeneration common converter (FR-CV) for continuous operation in regeneration status.
  Use the high power factor converter (FR-HC) to reduce harmonics, improve the power factor, or continuously use the regenerative status.

上正科技有限公司
購買、維修 此手冊零組件
電話： 037-466333
Email: service@repairtw.com
Line id: @zzzz
www.repairtw.com

Parameter Number	Name	Initial Value	Setting Range	Description
30	Regenerative function selection	0	0	Without regenerative function, Brake resistor (MRS type, MYS type), Brake unit (FR-BU2) Power regeneration common converter (FR-CV) High power factor converter (FR-HC)
			1	Brake resistor (MYS type) used at 100% torque/6%ED, High-duty brake resistor (FR-ABR)
			2	High power factor converter (FR-HC) when automatic restart after instantaneous power failure is selected
70	Special regenerative brake duty	0%	0 to 30%	Brake duty when using the high-duty brake resistor (FR-ABR)

The above parameters can be set when *Pr. 160 Extended function display selection* = "0". *(Refer to page 162)*

(1) When using the brake resistor (MRS type, MYS type), brake unit (FR-BU2), power regeneration common converter (FR-CV), and high power factor converter (FR-HC).

•Set *Pr. 30* to "0" (initial value). The *Pr. 70* setting is invalid.
At this time, the regenerative brake duty is as follows.
- FR-D720-025 to 165, FR-D720S-025 or more.....3%
- FR-D720-238 and 318, FR-D740-012 or more 2%

•Assign the inverter operation enable signal (X10) to the contact input terminal. To make protective coordination with the FR-HC and FR-CV, use the inverter operation enable signal to shut off the inverter output.
Input the RDY signal of the FR-HC (RDYB signal of the FR-CV).
•For the terminal used for X10 signal input, assign its function by setting "10" (X10) to any of *Pr. 178 to Pr. 182*.

(2) Brake resistor (MYS type) used at 100% torque/6%ED (FR-D720-165 only)

•Set "1" in *Pr. 30*.
•Set "6%" in *Pr. 70*.

(3) When using the high-duty brake resistor (FR-ABR) (FR-D720-025 or more, FR-D740-012 or more, FR-D720S-025 or more)

- Set "1" in *Pr. 30*.
- Set "10%" in *Pr. 70*.

(4) When a high power factor converter (FR-HC) is used and automatic restart after instantaneous power failure function is valid.

- When automatic restart after instantaneous power failure function of both the FR-HC and inverter is valid (when a value other than "9999" is set in *Pr. 57 Restart coasting time*), set "2" in *Pr. 30* .
- Set *Pr. 70* to "0%" (initial value).
- When the FR-HC detects power failure during inverter operation, the RDY signal turns on, resulting in the motor coasting. Turning the RDY signal off after power restoration, the inverter detects the motor speed (depends on the *Pr.162 Automatic restart after instantaneous power failure selection*) and restarts automatically after instantaneous power failure.

(5) Regenerative brake duty alarm output and alarm signal (RBP signal)

100%: regenerative overvoltage protection operation value

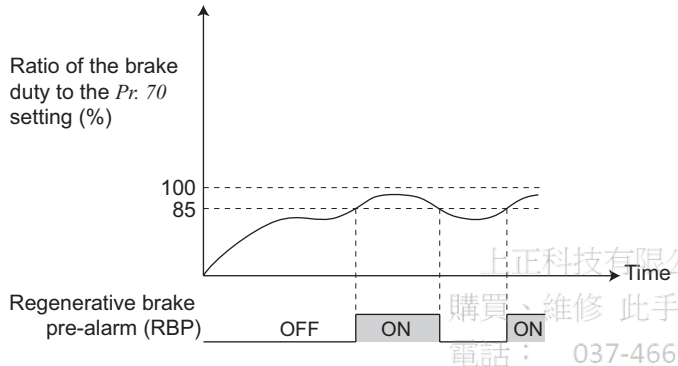

- [RB] appears on the operation panel and an alarm signal (RBP) is output when 85% of the regenerative brake duty set in *Pr. 70* is reached. If the regenerative brake duty reaches 100% of the *Pr. 70* setting, a regenerative overvoltage (E.OV1 to E.OV3) occurs.
  Note that [RB] is not displayed when *Pr. 30* = "0".
- The inverter does not trip even when the alarm (RBP) signal is output.
- For the terminal used for the RBP signal output, assign the function by setting "7 (positive logic) or 107 (negative logic)" in *Pr. 190 or Pr. 192 (output terminal function selection)* .

上正科技有限公司
購買、維修 此手冊零件
電話： 037-466333
Email: service@repairtw.com
www.repairtw.com

REMARKS

- The MRS signal can also be used instead of the X10 signal. *(Refer to page 115)*
- Refer to *page 31* to *35* for connecting the brake resistor (MRS type, MYS type), high-duty brake resistor (FR-ABR), brake unit (FR-BU2), high power factor converter (FR-HC), and power regeneration common converter (FR-CV).

NOTE

- **When terminal assignment is changed using *Pr. 178 to Pr. 182 (input terminal function selection) and Pr. 190, Pr. 192 (output terminal function selection)*, the other functions may be affected. Make setting after confirming the function of each terminal.** *(Refer to page 113)*

⚠ WARNING

⚠ The value set in *Pr. 70* must not exceed the setting of the brake resistor used.
Otherwise, the resistor can overheat.

Parameters referred to

Pr. 57 Restart coasting time ☞ *Refer to page 136*
Pr. 178 to Pr. 182 (input terminal function selection) ☞ *Refer to page 113*
Pr. 190, Pr. 192 (output terminal function selection) ☞ *Refer to page 119*

4.9.3 Stop selection (Pr. 250)

Used to select the stopping method (deceleration to a stop or coasting) when the start signal turns OFF.
Used to stop the motor with a mechanical brake, etc. together with switching OFF of the start signal.
You can also select the operations of the start signals (STF/STR). (Refer to *page 117* for start signal selection)

Parameter Number	Name	Initial Value	Setting Range	Description	
				Start signal (STF/STR) *(Refer to page 117)*	Stop operation
250	Stop selection	9999	0 to 100s	STF signal: Forward rotation start STR signal: Reverse rotation start	The motor is coasted to a stop when the preset time elapses after the start signal is turned OFF.
			1000s to 1100s	STF signal: Start signal STR signal: Forward/reverse signal	The motor is coasted to a stop (*Pr. 250* - 1000)s after the start signal is turned OFF.
			9999	STF signal: Forward rotation start STR signal: Reverse rotation start	When the start signal is turned OFF, the motor decelerates to stop.
			8888	STF signal: Start signal STR signal: Forward/reverse signal	

The above parameter can be set when *Pr. 160 Extended function display selection* = "0". *(Refer to page 162)*

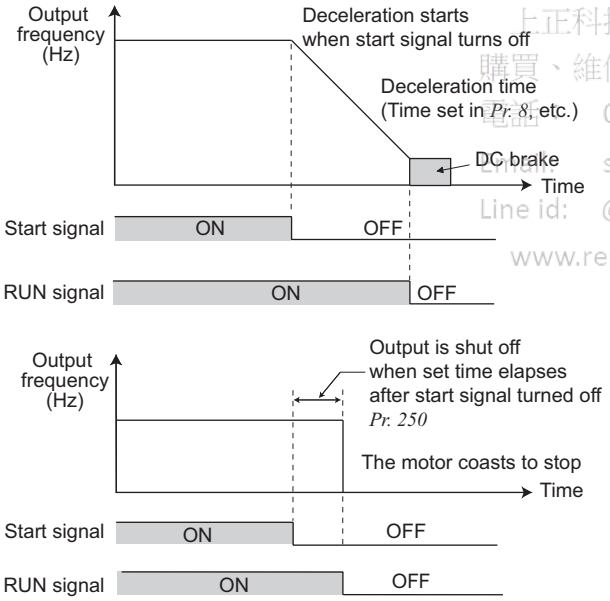

上正科技有限公司
購買、維修 此手冊零組件
電話: 037-460999
email: service@repairtw.com
Line id: @zzzz
www.repairtw.com

(1) Decelerate the motor to a stop

- Set *Pr. 250* to "9999" (initial value) or "8888".
- The motor decelerates to a stop when the start signal (STF/STR) turns OFF.

(2) Coast the motor to a stop

- Use *Pr. 250* to set the time from when the start signal turns OFF until the output is shut off. When any of "1000 to 1100" is set, the output is shut off in (*Pr. 250* - 1000)s.
- The output is shut off when the time set in *Pr. 250* has elapsed after the start signal had turned OFF. The motor coasts to a stop.
- The RUN signal turns OFF when the output stops.

REMARKS

- Stop selection is invalid when the following functions are activated.
  - Power failure stop function (*Pr. 261*)
  - PU stop (*Pr. 75*)
  - Deceleration stop because of communication error (*Pr. 502*)
  - Jog operation mode
- When setting of *Pr. 250* is not 9999 nor 8888, acceleration/deceleration is performed according to the frequency command, until start signal is OFF and output is shutoff.

NOTE

- **When the start signal is turned ON again during motor coasting, the motor starts at *Pr. 13 Starting frequency*.**

Parameters referred to

Pr. 7 Acceleration time, Pr. 8 Deceleration time ☞ *Refer to page 96*
Pr. 13 Starting frequency ☞ *Refer to page 98*

4.10 Function assignment of external terminal and control

Purpose	Parameter that should be Set		Refer to Page
Assign function to input terminal	**Input terminal function selection**	**Pr. 178 to Pr. 182**	*113*
Set MRS signal (output shutoff) to NC contact specification	**MRS input selection**	**Pr. 17**	*115*
Assign start signal and forward/ reverse command to other signals	**Start signal (STF/STR) operation selection**	**Pr. 250**	*117*
Assign function to output terminal	**Output terminal function assignment**	**Pr. 190, Pr. 192**	*119*
Detect output frequency	**Up-to-frequency sensitivity** **Output frequency detection**	**Pr. 41 to Pr. 43**	*123*
Detect output current	**Output current detection** **Zero current detection**	**Pr. 150 to Pr. 153, Pr. 166, Pr. 167**	*124*
Remote output function	**Remote output**	**Pr. 495, Pr. 496**	*126*

4.10.1 Input terminal function selection (Pr. 178 to Pr. 182)

Use these parameters to select/change the input terminal functions.

Parameter Number	Name	Initial Value	Initial Signal	Setting Range
178	**STF terminal function selection**	60	STF (forward rotation command)	0 to 5, 7, 8, 10, 12, 14, 16, 18, 24, 25, 60, 62, 65 to 67, 9999
179	**STR terminal function selection**	61	STR (reverse rotation command)	0 to 5, 7, 8, 10, 12, 14, 16, 18, 24, 25, 61, 62, 65 to 67, 9999
180	**RL terminal function selection**	0	RL (low-speed operation command)	0 to 5, 7, 8, 10, 12, 14, 16, 18, 24, 25, 62, 65 to 67, 9999
181	**RM terminal function selection**	1	RM (middle speed operation command)	
182	**RH terminal function selection**	2	RH (high-speed operation command)	

上正科技有限公司
購買、維修、此手冊零組件
電話： 037-466333
Email: service@repairtw.com
Line id: @rzzz
www.repairtw.com

The above parameters can be set when *Pr. 160 Extended function display selection* = "0". *(Refer to page 162)*

(1) Input terminal function assignment

•Using *Pr. 178 to Pr. 182*, set the functions of the input terminals.
•Refer to the following table and set the parameters:

Setting	Signal	Function		Related Parameters	Refer to Page
0	RL	*Pr. 59* = 0 (initial value)	Low-speed operation command	Pr. 4 to Pr. 6, Pr. 24 to Pr. 27 Pr.232 to Pr.239	*89*
		Pr. 59 ≠ 0 ∗1	Remote setting (setting clear)	Pr. 59	*93*
1	RM	*Pr. 59* = 0 (initial value)	Middle-speed operation command	Pr. 4 to Pr. 6, Pr. 24 to Pr. 27, Pr. 232 to Pr. 239	*89*
		Pr. 59 ≠ 0 ∗1	Remote setting (deceleration)	Pr. 59	*93*
2	RH	*Pr. 59* = 0 (initial value)	High-speed operation command	Pr. 4 to Pr. 6, Pr. 24 to Pr. 27, Pr. 232 to Pr. 239	*89*
		Pr. 59 ≠ 0 ∗1	Remote setting (acceleration)	Pr. 59	*93*
3	RT	Second function selection		Pr. 44 to Pr. 51	*116*
4	AU	Terminal 4 input selection		Pr. 267	*150*
5	JOG	Jog operation selection		Pr. 15, Pr. 16	*91*
7	OH	External thermal relay input ∗2		Pr. 9	*100*
8	REX	15-speed selection (combination with three speeds RL, RM, RH)		Pr. 4 to Pr. 6, Pr. 24 to Pr. 27, Pr. 232 to Pr. 239	*89*
10	X10	Inverter run enable signal (FR-HC, FR-CV connection)		Pr. 30, Pr. 70	*110*
12	X12	PU operation external interlock		Pr. 79	*165*
14	X14	PID control valid terminal		Pr. 127 to Pr. 134	*212*
16	X16	PU-external operation switchover (turning ON X16 selects external operation)		Pr. 79, Pr. 340	*172*
18	X18	V/F switchover (V/F control is exercised when X18 is ON)		Pr. 80	*75, 105*
24	MRS	Output stop		Pr. 17	*115*
25	STOP	Start self-holding selection		—	*117*
60	STF	Forward rotation command (assigned to STF terminal *(Pr. 178)* only)		—	*117*
61	STR	Reverse rotation command (assigned to STR terminal *(Pr. 179)* only)		—	*117*
62	RES	Inverter reset		—	—
65	X65	PU/NET operation switchover (turning ON X65 selects PU operation)		Pr. 79, Pr. 340	*173*
66	X66	External/NET operation switchover (turning ON X66 selects NET operation)		Pr. 79, Pr. 340	*173*
67	X67	Command source switchover (turning ON X67 makes *Pr. 338 and Pr. 339* commands valid)		Pr. 338, Pr. 339	*176*
9999	—	No function		—	—

∗1 When *Pr. 59 Remote function selection* ≠ "0", the functions of the RL, RM and RH signals are changed as given in the table.
∗2 The OH signal turns ON when the relay contact "opens".

上正科技有限公司
購買、修復、收購電子零件
電話： 037-466333
Email: service@repairtw.com
Line id: @zzzz
www.repairtw.com

NOTE

- **Changing the terminal assignment using *Pr.178 to Pr.182 (input terminal function selection)* may affect the other functions. Make setting after confirming the function of each terminal.**
- **One function can be assigned to two or more terminals. In this case, the terminal inputs are ORed.**
- **The priorities of the speed commands are in order of jog > multi-speed setting (RH, RM, RL, REX) > PID (X14).**
- **When the X10 signal (FR-HC, FR-CV connection-inverter operation enable signal) is not set or when the PU operation external interlock (X12) signal is not assigned with *Pr.79 Operation mode selection* set to "7", the MRS signal shares this function.**
- **Same signal is used to assign multi-speed (7th speed) and remote setting. They cannot be set individually. (Same signal is used since multi-speed (7th speed) setting and remote setting are not used to set speed at the same time.)**
- **When V/F control is selected by V/F switchover (X18 signal), second function is also selected at the same time. Control between V/F and General-purpose magnetic flux can not be switched during operation. In case control is switched between V/F and General-purpose magnetic flux, only second function is selected.**
- **Turning the AU signal ON makes terminal 2 (voltage input) invalid.**

(2) Response time of each signal

- The response time of the X10 signal and MRS signal is within 2ms.
  The response time of other signals is within 20ms.

4.10.2 Inverter output shutoff signal (MRS signal, Pr. 17)

The inverter output can be shut off by the MRS signal. Also, logic for the MRS signal can be selected.

Parameter Number	Name	Initial Value	Setting Range	Description
17	MRS input selection	0	0	Normally open input
			2	Normally closed input (NC contact input specifications)
			4	External terminal: Normally closed input (NC contact input specifications) Communication: Normally open input

The above parameter can be set when *Pr. 160 Extended function display selection* = "0". (*Refer to page 162*)

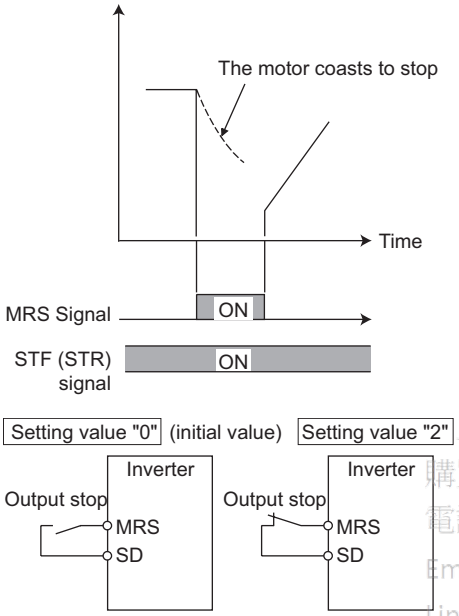

(1) Output shutoff signal (MRS signal)

- Turning ON the output shutoff signal (MRS) during inverter running shuts off the output immediately.
  Set "24" in any of *Pr. 178 to Pr. 182 (input terminal function selection)* to assign a function to the MRS signal.
- MRS signal may be used as described below.

(a) When mechanical brake (e.g. electromagnetic brake) is used to stop motor
The inverter output is shut off when the mechanical brake operates.

(b) To provide interlock to disable operation by the inverter
With the MRS signal ON, the inverter cannot be operated if the start signal is entered into the inverter.

(c) Coast the motor to a stop.
When the start signal is turned OFF, the inverter decelerates the motor to a stop in the preset deceleration time, but when the MRS signal is turned ON, the motor coasts to a stop.

上正自動化有限公司
購買、維修 此手冊零組件
電話： 037-466333
Email: service@repairtw.com
Line id: @222
www.repairtw.com

(2) MRS signal logic inversion *(Pr. 17)*

- When *Pr. 17* is set to "2", the MRS signal (output stop) can be changed to the normally closed (NC contact) input specification. When the MRS signal turns ON (opens), the inverter shuts off the output.

(3) Assign a different action for each MRS signal input from communication and external terminal (*Pr. 17* = "4")

- When *Pr. 17* is set to "4", the MRS signal from external terminal (output stop) can be changed to the normally closed (NC contact) input, and the MRS signal from communication can be changed to the normally open (NO contact) input.
  This function is useful to perform operation by communication with MRS signal from external terminal remained on.

External MRS	Communication MRS	*Pr. 17* Setting		
		0	2	4
OFF	OFF	Operation enabled	Output shutoff	Output shutoff
OFF	ON	Output shutoff	Output shutoff	Output shutoff
ON	OFF	Output shutoff	Output shutoff	Operation enabled
ON	ON	Output shutoff	Operation enabled	Output shutoff

REMARKS

- The MRS signal can shut off the output, independently of the PU, external or network operation mode.

NOTE

- **Changing the terminal assignment using *Pr. 178 to Pr. 182 (input terminal function selection)* may affect the other functions. Make setting after confirming the function of each terminal.**

Parameters referred to

Pr. 178 to Pr. 182 (input terminal function selection) ☞ *Refer to page 113*

4.10.3 Condition selection of function validity by second function selection signal (RT)

You can select the second function using the RT signal.

- When the RT signal turns ON, the second function becomes valid.
- For the RT signal, set "3" in any of *Pr. 178 to Pr. 182 (input terminal function selection)* to assign the function.
- The second function has the following applications.

(a) Switching between normal use and emergency use
(b) Switching between heavy load and light load
(c) Changing of acceleration/deceleration time by broken line acceleration/deceleration
(d) Switching of characteristic between the main motor and sub motor

Second function connection diagram

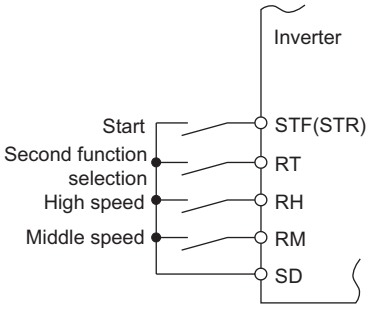

Second acceleration/deceleration time

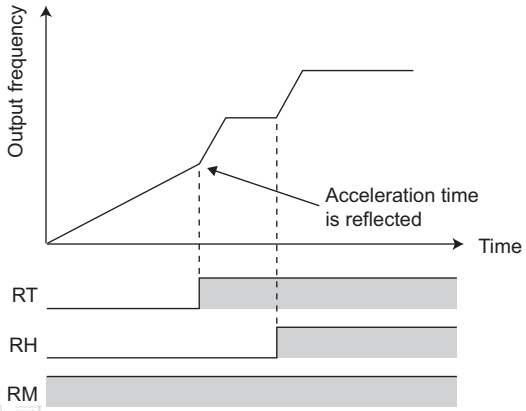

上正科技有限公司
購買、維修技術諮詢組件
電話： 03-7666333
Email: service@repairtw.com
Line id: @zzzz
www.repairtw.com

Function	First Function Parameter Number	Second Function Parameter Number	Refer to Page
Torque boost	Pr. 0	Pr. 46	*73*
Base frequency	Pr. 3	Pr. 47	*85*
Acceleration time	Pr. 7	Pr. 44	*96*
Deceleration time	Pr. 8	Pr. 44, Pr. 45	*96*
Electronic thermal O/L relay	Pr. 9	Pr. 51	*100*
Stall prevention	Pr. 22	Pr. 48	*79*
Applied motor	Pr. 71	Pr. 450	*103*

NOTE

- **When the RT signal is ON, the above second function is selected at the same time.**
- **Changing the terminal assignment using *Pr. 178 to Pr. 182 (input terminal function selection)* may affect the other functions. Make setting after confirming the function of each terminal.**

Parameters referred to

Pr. 178 to Pr. 182 (input terminal function selection) ☞ *Refer to page 113*

4.10.4 Start signal operation selection (STF, STR, STOP signal, Pr. 250)

You can select the operation of the start signal (STF/STR).
Used to select the stopping method (deceleration to a stop or coasting) when the start signal turns OFF.
Used to stop the motor with a mechanical brake, etc. together with switching off of the start signal.
(Refer to *page 112* for stop selection)

Parameter Number	Name	Initial Value	Setting Range	Description	
				Start signal (STF/STR)	Stop operation *Refer to page 112*
250	Stop selection	9999	0 to 100s	STF signal: Forward rotation start STR signal: Reverse rotation start	The motor is coasted to a stop when the preset time elapses after the start signal is turned OFF.
			1000s to 1100s	STF signal: Start signal STR signal: Forward/reverse signal	When the setting is any of 1000s to 1100s, the inverter coasts to a stop in (*Pr. 250* - 1000)s.
			9999	STF signal: Forward rotation start STR signal: Reverse rotation start	When the start signal is turned OFF, the motor decelerates to stop.
			8888	STF signal: Start signal STR signal: Forward/reverse signal	

The above parameter can be set when *Pr. 160 Extended function display selection* = "0". (*Refer to page 162*)

(1) Two-wire type connection (STF, STR signal)

- The two-wire connection is shown below.
- In the initial setting, the forward/reverse rotation signals (STF/STR) are used as start and stop signals. Turn ON either of the forward and reverse rotation signals to start the motor in the corresponding direction. Switch both OFF (or both ON) the start signal during operation to decelerate the inverter to a stop.
- The speed setting signal may either be given by entering 0 to 10VDC across the speed setting input terminal 2-5, or by setting the required values in *Pr. 4 to Pr. 6 Multi-speed setting (high, middle, low speeds)*, etc.
(For multi-speed operation, refer to *page 89*.)
- When *Pr. 250* is set to any of "1000 to 1100, 8888", the STF signal becomes a start command and the STR signal a forward/reverse command.

上正科技有限公司
購買、維修、出租測試儀器
電話: 037-480333
Email: service@repairtw.com
Line id: @zzzz
www.repairtw.com

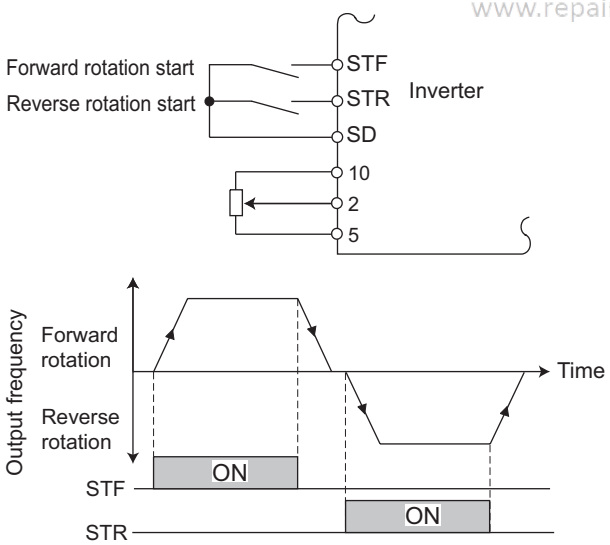

2-wire connection example (*Pr. 250* = "9999")

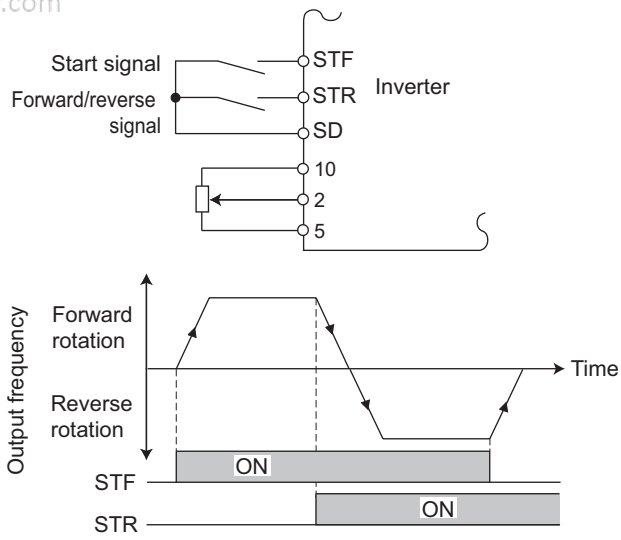

2-wire connection example (*Pr. 250* = "8888")

REMARKS

- When *Pr. 250* is set to any of "0 to 100, 1000 to 1100", turning off the start command coasts the inverter to a stop. *(Refer to page 112)*
- The STF and STR signals are assigned to the STF and STR terminals in the initial setting. The STF signal can be assigned to *Pr. 178 STF terminal function selection*, and the STR signal to *Pr. 179 STR terminal function selection* only.

(2) Three-wire type (STF, STR, STOP signal)

- The three-wire connection is shown below.
- Turning the STOP signal ON makes start self-holding function valid. In this case, the forward/reverse rotation signal functions only as a start signal.
- If the start signal (STF or STR) is turned ON and then OFF, the start signal is held and makes a start. When changing the direction of rotation, turn STR (STF) ON once and then OFF.
- To stop the inverter, turning OFF the STOP signal once decelerates it to a stop.
- When using the STOP signal, set "25" in any of *Pr.178 to Pr.182* to assign function.

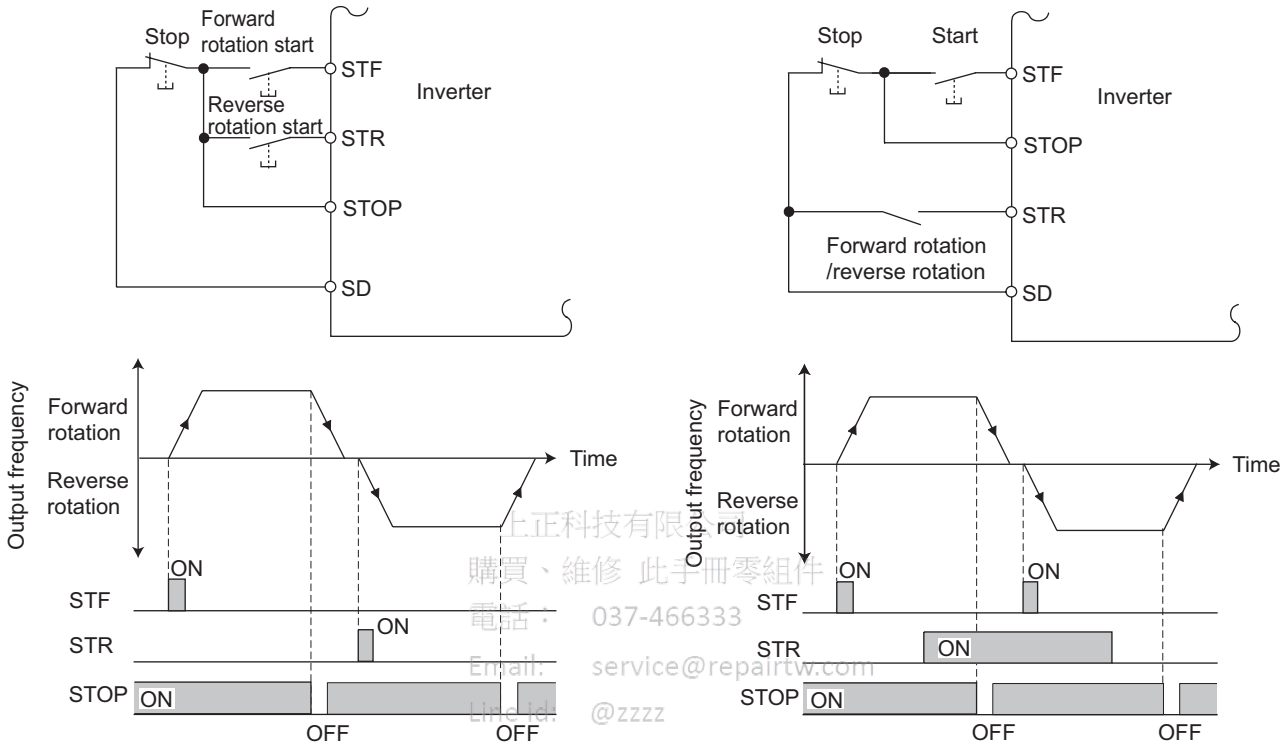

3-wire connection example (*Pr. 250* = "9999") **3-wire connection example (*Pr. 250* = "8888")**

上正科技有限公司
購買、維修 此手冊零組件
電話： 037-466333
Email: service@repairtw.com
Line Id: @zzzz
www.repairtw.com

REMARKS

- When the JOG signal is turned ON to enable Jog operation, the STOP signal becomes invalid.
- If the MRS signal is turned ON to stop the output, the self-holding function is not canceled.

(3) Start signal selection

STF	STR	*Pr. 250* Setting Inverter Status	
		0 to 100s, 9999	1000s to 1100s 8888
OFF	OFF	Stop	Stop
OFF	ON	Reverse rotation	
ON	OFF	Forward rotation	Forward rotation
ON	ON	Stop	Reverse rotation

Parameters referred to

Pr. 4 to Pr. 6 (multi-speed setting) ☞ *Refer to page 89*
Pr. 178 to Pr. 182 (input terminal function selection) ☞ *Refer to page 113*

4.10.5 Output terminal function selection (Pr. 190, Pr. 192)

You can change the functions of the open collector output terminal and relay output terminal.

Parameter Number	Name		Initial Value	Initial Signal	Setting Range
190	RUN terminal function selection	Open collector output terminal	0	RUN (inverter running)	0, 1, 3, 4, 7, 8, 11 to 16, 25, 26, 46, 47, 64, 70, 80, 90, 91, 93*, 95, 96, 98, 99, 100, 101, 103, 104, 107, 108, 111 to 116, 125, 126, 146, 147, 164, 170, 180, 190, 191, 193*, 195, 196, 198, 199, 9999
192	A,B,C terminal function selection	Relay output terminal	99	ALM (fault output)	

* "93" and "193" can not be set in *Pr. 192*.

The above parameters can be set when *Pr. 160 Extended function display selection* = "0". *(Refer to page 162)*

(1) Output signal list

- You can set the functions of the output terminals.
- Refer to the following table and set the parameters: (0 to 99: positive logic, 100 to 199: negative logic)

Setting		Signal	Function	Operation	Related Parameter	Refer to Page
Positive logic	Negative logic					
0	100	RUN	Inverter running	Output during operation when the inverter output frequency rises to or above *Pr. 13 Starting frequency*.	—	*121*
1	101	SU	Up to frequency *1	Output when the output frequency is reached to the set frequency.	Pr. 41	*123*
3	103	OL	Overload alarm	Output while stall prevention function is activated.	Pr. 22, Pr. 23, Pr. 66	*79*
4	104	FU	Output frequency detection	Output when the output frequency reaches the frequency set in *Pr. 42* (*Pr. 43* for reverse rotation).	Pr. 42, Pr. 43	*123*
7	107	RBP	Regenerative brake pre-alarm	Output when 85% of the regenerative brake duty set in *Pr. 70* is reached.	Pr. 70	*110*
8	108	THP	Electronic thermal O/L relay pre-alarm	Output when the electronic thermal value reaches 85% of the trip level. (Electronic thermal relay function protection (E.THT/E.THM) activates, when the value reached 100%.	Pr. 9, Pr. 51	*100*
11	111	RY	Inverter operation ready	Output when reset process is completed (when the inverter can be started by switching the start signal on or while it is running) after powering on inverter.	—	*121*
12	112	Y12	Output current detection	Output when the output current is higher than the *Pr. 150* setting for longer than the time set in *Pr. 151* .	Pr. 150, Pr. 151	*124*
13	113	Y13	Zero current detection	Output when the output power is lower than the *Pr. 152* setting for longer than the time set in *Pr. 153* .	Pr. 152, Pr. 153	*124*
14	114	FDN	PID lower limit	Output when the feedback value falls below the lower limit of PID control.	Pr. 127 to Pr. 134 Pr. 575 to Pr. 577	*212*
15	115	FUP	PID upper limit	Output when the feedback value rises above the upper limit of PID control		
16	116	RL	PID forward/reverse rotation output	Output when forward rotation is performed in PID control.		
25	125	FAN	Fan fault output	Output at the time of a fan fault.	Pr. 244	*228*
26	126	FIN	Heatsink overheat pre-alarm	Output when the heatsink temperature reaches about 85% of the heatsink overheat protection providing temperature.	—	*255*
46	146	Y46	During deceleration at occurrence of power failure	Output when the power failure-time deceleration function is executed. (retained until release)	Pr. 261	*142*
47	147	PID	During PID control activated	Output during PID control.	Pr. 127 to Pr. 134 Pr. 575 to Pr. 577	*212*
64	164	Y64	During retry	Output during retry processing.	Pr. 65 to Pr. 69	*144*
70	170	SLEEP	PID output interruption	Output when the PID output interruption function is executed.	Pr. 127 to Pr. 134, Pr. 575 to Pr. 577	*212*
80	180	For manufacturer setting				

上信科技有限公司
購買 維修 諮詢 租賃
電話: 037-466333
Email: service@repairtw.com
Line ID: @repair
www.repairtw.com

Setting		Signal	Function	Operation	Related Parameter	Refer to Page
Positive logic	Negative logic					
90	190	Y90	Life alarm	Output when any of the control circuit capacitor, main circuit capacitor and inrush current limit circuit or the cooling fan approaches the end of its service life.	Pr. 255 to Pr. 259	*229*
91	191	Y91	Fault output 3 (power-off signal)	Output when a fault occurs due to the internal circuit failure or the inverter wiring mistake, etc.	—	*122*
93	193	Y93	Current average value monitor signal	Average current value and maintenance timer value are output as pulses. The signal can not be set in *Pr. 192 A,B,C terminal function selection* .	Pr. 555 to Pr. 557	*234*
95	195	Y95	Maintenance timer signal	Output when *Pr. 503* rises to or above the *Pr. 504* setting.	Pr. 503, Pr. 504	*233*
96	196	REM	Remote output	Output to the terminal when a value is set to the parameter.	Pr. 495, Pr. 496	*126*
98	198	LF	Alarm output	Output when an alarm (fan failure or communication error warning) occurs.	Pr. 121, Pr. 244	*183*, *228*
99	199	ALM	Fault output	Output when a fault occurs. The signal output is stopped when the fault is reset.	—	*122*
9999		—	No function	—	—	—

*1 Note that when the frequency setting is varied using an analog signal or of the operation panel, the output of the SU (up to frequency) signal may alternate on and off depending on that varying speed and the timing of the varying speed due to acceleration/deceleration time setting.
(The output will not alternate on and off when the acceleration/deceleration time setting is "0s".)

REMARKS

- The same function may be set to more than one terminal.
- When the function is executed, the terminal conducts at the setting of any of "0 to 99", and does not conduct at the setting of any of "100 to 199".

上正科技有限公司
購買、修理、代手買零組件
電話： 037-466333
Email: service@repairtw.com
www.repairtw.com

NOTE

- **Changing the terminal assignment using *Pr.190, Pr.192 (output terminal function selection)* may affect the other functions. Make setting after confirming the function of each terminal.**
- **Do not assign signals which repeat frequent ON/OFF to A, B, and C. Otherwise, the life of the relay contact decreases.**

(2) Inverter operation ready signal (RY signal) and inverter running signal (RUN signal)

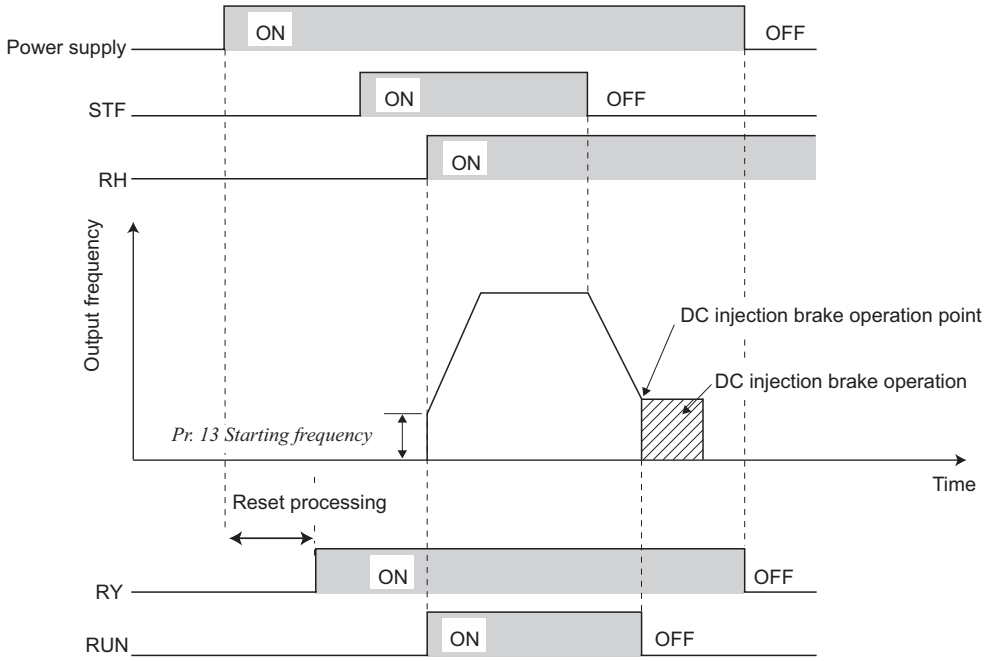

- When the inverter is ready to operate, the output of the operation ready signal (RY) is ON. (It is also ON during inverter running.)
- When the output frequency of the inverter rises to or above *Pr. 13 Starting frequency* , the output of the inverter running signal (RUN) is turned on. During an inverter stop or DC injection brake operation, the output is off.
- When using the RY and RUN signals, assign functions to *Pr.190 or Pr.192 (output terminal selection function)* referring to the table below.

上正科技有限公司
購買、維修 此手冊零組件
電話: 037-466333
Email: service@repairtw.com
Line id: @zzzz
www.repairtw.com

Output Signal	*Pr. 190 to Pr. 192* Setting	
	Positive logic	Negative logic
RY	11	111
RUN	0	100

Inverter Status / Output signal	Start Signal OFF (during stop)	Start Signal ON (during stop)	Start Signal ON (during operation)	Under DC Injection Brake	At Alarm Occurrence or MRS Signal ON (output shutoff)	Automatic Restart after Instantaneous Power Failure		
						Coasting		Restarting
						Start signal ON	Start signal OFF	
RY	ON	ON	ON	ON	OFF	ON *1		ON
RUN	OFF	OFF	ON	OFF	OFF	OFF		ON

*1 This signal turns OFF during power failure or undervoltage.

REMARKS

- The RUN signal (positive logic) is assigned to the terminal RUN in the initial setting.

(3) Fault output signal (ALM signal)

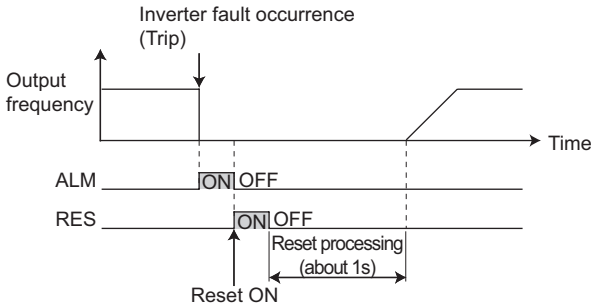

- If the inverter comes to trip, the ALM signal is output.

REMARKS

- The ALM signal is assigned to the ABC contact in the initial setting. By setting "99 (positive logic) or 199 (negative logic) in *Pr.190 or Pr.192 (output terminal function selection)*, the ALM signal can be assigned to the other signal.
- Refer to *page 250* for the inverter fault description.

(4) Fault output 3 (power-off signal) (Y91 signal)

- The Y91 signal is output at occurrence of a fault attributable to the failure of the inverter circuit or a fault caused by a wiring mistake.
- When using the Y91 signal, set "91 (positive logic)" or "191 (negative logic)" to *Pr.190 or Pr.192 (output terminal function selection)* to assign the function to the output terminal.
- The following table indicates the faults that will output the Y91 signal. (Refer to *page 249* for the fault description.)

Operation Panel Indication		Name
E. bE	E. BE	Brake transistor alarm detection
E. GF	E.GF	Output side earth (ground) fault overcurrent at start
E. LF	E.LF	Output phase loss
E. PE	E.PE	Parameter storage device fault
E.CPU	E.CPU	CPU fault
E.IOH	E.IOH	Inrush current limit circuit fault

上正科技有限公司
購買、維修 此手冊零組件
電話： 037-466333
Email: service@repairtw.com
@zzzz
www.repairtw.com

REMARKS

- At occurrence of output side earth (ground) fault overcurrent (E.GF), overcurrent trip during acceleration(E.OC1) may be displayed. At this time, the Y91 signal is output.

Parameters referred to

Pr. 13 Starting frequency *Refer to page 98*

4.10.6 Detection of output frequency (SU, FU signal, Pr. 41 to Pr. 43)

The inverter output frequency is detected and output at the output signals.

Parameter Number	Name	Initial Value	Setting Range	Description
41	Up-to-frequency sensitivity	10%	0 to 100%	Level where the SU signal turns ON.
42	Output frequency detection	6Hz	0 to 400Hz	Frequency where the FU signal turns ON.
43	Output frequency detection for reverse rotation	9999	0 to 400Hz	Frequency where the FU signal turns ON in reverse rotation.
			9999	Same as *Pr. 42* setting

The above parameters can be set when *Pr. 160 Extended function display selection* = "0". *(Refer to page 162)*

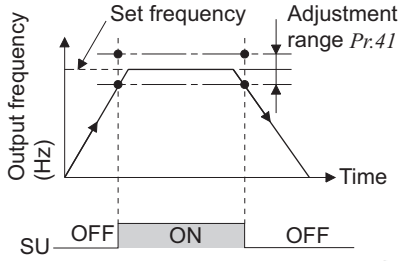

(1) Up-to-frequency sensitivity (SU signal, *Pr. 41*)

- When the output frequency reaches the set frequency, the up-to-frequency signal (SU) is output.
- The *Pr. 41* value can be adjusted within the range 0% to ±100% on the assumption that the set frequency is 100%.
- This parameter can be used to ensure that the running frequency has been reached to provide the operation start signal etc. for related equipment.
- When using the SU signal, set "1 (positive logic) or 101 (negative logic)" in *Pr. 190 or Pr. 192 (output terminal function selection)* to assign function to the output terminal.

上正科技有限公司
購買、維修 此手冊零組件
電話： 037-
Email: service@
Line id: @zzzz
www.repairtw.com

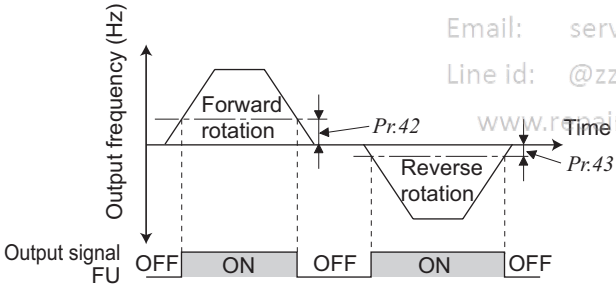

(2) Output frequency detection (FU signal, *Pr. 42, Pr. 43*)

- The output frequency detection signal (FU) is output when the output frequency reaches or exceeds the *Pr. 42* setting.
- This function can be used for electromagnetic brake operation, open signal, etc.
- Frequency detection that is dedicated to reverse operation use can be set by setting detection frequency to *Pr. 43*. This function is effective for switching the timing of electromagnetic brake operation between forward rotation (rise) and reverse rotation (fall) during vertical lift operation, etc.
- When *Pr. 43* ≠ "9999", the *Pr. 42* setting is used for forward rotation and the *Pr. 43* setting is used for reverse rotation.
- When using the FU signal, set "4 (positive logic)" or "104 (negative logic)" to *Pr. 190 or Pr. 192 (output terminal function selection)* to assign the function to the output terminal.

REMARKS

- All signals are off during DC injection brake.
- The output frequency to be compared with the set frequency is the output frequency before slip compensation is performed.

NOTE

- **Changing the terminal assignment using *Pr.190, Pr.192 (output terminal function selection)* may affect the other functions. Make setting after confirming the function of each terminal.**

Parameters referred to

Pr. 190, Pr. 192 (output terminal function selection) ☞ *(Refer to page 119)*

4.10.7 Output current detection function (Y12 signal, Y13 signal, Pr. 150 to Pr. 153, Pr. 166, Pr. 167)

The output current during inverter running can be detected and output to the output terminal.

Parameter Number	Name	Initial Value	Setting Range	Description
150	Output current detection level	150%	0 to 200%	100% is the rated inverter current.
151	Output current detection signal delay time	0s	0 to 10s	Output current detection period. The time from when the output current has risen above the setting until the output current detection signal (Y12) is output.
152	Zero current detection level	5%	0 to 200%	The rated inverter current is assumed to be 100%.
153	Zero current detection time	0.5s	0 to 1s	Period from when the output current drops below the *Pr. 152* value until the zero current detection signal (Y13) is output.
166	Output current detection signal retention time	0.1s	0 to 10s	Set the retention time when the Y12 signal is ON.
			9999	The Y12 signal ON status is retained. The signal is turned off at the next start.
167	Output current detection operation selection	0	0	Operation continues when the Y12 signal is ON
			1	The inverter is brought to trip when the Y12 signal is ON. (E.CDO)

The above parameters can be set when *Pr. 160 Extended function display selection* = "0". *(Refer to page 162)*

上正科技有限公司
購買、維修 此手冊零組件
電話： 037-466333
Email: service@repairtw.com
Line id: @zzzz
www.repairtw.com

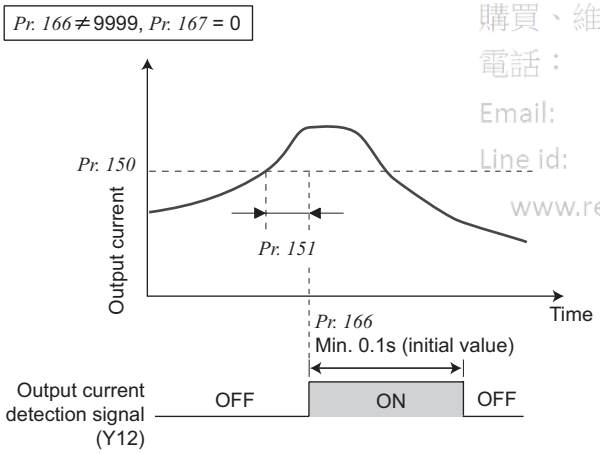

(1) Output current detection (Y12 signal, *Pr. 150, Pr. 151, Pr. 166, Pr. 167*)

- The output current detection function can be used for excessive torque detection, etc.
- If the output current remains higher than the *Pr. 150* setting during inverter operation for longer than the time set in *Pr. 151*, the output current detection signal (Y12) is output from the inverter's open collector or relay output terminal.
- When the Y12 signal turns ON, the ON state is held for the time set in *Pr. 166*.
- When *Pr. 166* = "9999", the ON state is held until a next start.
- At the *Pr. 167* setting of "1", the inverter trips, and the output current detection fault (E.CDO) is displayed when the Y12 signal turns ON. When fault occurs, the Y12 signal is ON for the time set in *Pr. 166* at the *Pr. 166* setting of other than 9999, and remains ON until a reset is made at the *Pr. 166* setting of 9999. E.CDO does not occur even if "1" is set in *Pr. 167* while Y12 is ON. The *Pr. 167* setting is valid after Y12 turns OFF.
- For the Y12 signal, set "12 (positive logic) or 112 (negative logic)" in *Pr. 190 or Pr. 192 (output terminal function selection)* and assign functions to the output terminal.

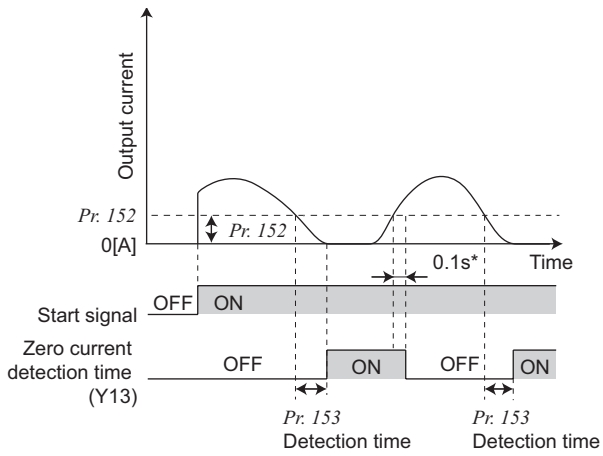

* The zero current detection signal (Y13) holds the signal for approximately 0.1s once turned on.

(2) Zero current detection (Y13 signal, *Pr. 152, Pr. 153*)

- If the output current remains lower than the *Pr. 152* setting during inverter operation for longer than the time set in *Pr. 153*, the zero current detection (Y13) signal is output from the inverter's open collector or relay output terminal.
- When the inverter's output current falls to "0", torque will not be generated. This may cause a drop due to gravity when the inverter is used in vertical lift application.
  To prevent this, the Y13 signal can be output from the inverter to close the mechanical brake when the output current has fallen to "zero".
- For the Y13 signal, set "13 (positive logic) or 113 (negative logic)" in *Pr. 190 or Pr. 192 (output terminal function selection)* and assign functions to the output terminal.

REMARKS

- This function is also valid during execution of the offline auto tuning.
- The response time of Y12 and Y13 signals is approximately 0.1s. Note that the response time changes according to the load condition.
- When *Pr. 152* = "0", detection is disabled.

NOTE

- **Changing the terminal assignment using *Pr. 190, Pr. 192 (output terminal function selection)* may affect the other functions. Make setting after confirming the function of each terminal.**

上正科技有限公司
購買、維修、出租、回收
電話： 037-466333
Line Id: @2222
www.repairtw.com

⚠ CAUTION

⚠ The zero current detection level setting should not be too high, and the zero current detection time setting not too long. Otherwise, the detection signal may not be output when torque is not generated at a low output current.

⚠ To prevent the machine and equipment from resulting in hazardous conditions detection signal, install a safety backup such as an emergency brake even the zero current detection function is set valid.

Parameters referred to

Offline auto tuning ☞ *Refer to page 105*
Pr. 190, Pr. 192 (output terminal function selection) ☞ *Refer to page 119*

4.10.8 Remote output selection (REM signal, Pr. 495, Pr. 496)

You can utilize the on/off of the inverter's output signals instead of the remote output terminal of the programmable logic controller.

Parameter Number	Name	Initial Value	Setting Range	Description	
495	Remote output selection	0	0	Remote output data clear at powering off	Remote output data clear at inverter reset
			1	Remote output data retention at powering off	
			10	Remote output data clear at powering off	Remote output data retention at inverter reset
			11	Remote output data retention at powering off	
496*	Remote output data 1	0	0 to 4095	Refer to the following diagram.	

The above parameters can be set when *Pr. 160 Extended function display selection* = "0". *(Refer to page 162)*

* The above parameters allow its setting to be changed during operation in any operation mode even if "0" (initial value) is set in *Pr. 77 Parameter write selection*.

<**Remote output data**>

Pr. 496

b11											b0
*	*	*	*	*	*	ABC	*	*	*	*	RUN

* Any

- The output terminal can be turned on/off depending on the *Pr. 496* setting. The remote output selection can be controlled on/off by computer link communication from the PU connector.
- Set "96 (positive logic) or 196 (negative logic)" to *Pr. 190 or Pr. 192 (output terminal function selection)*, and assign the remote output (REM) signal to the terminal used for remote output.
- When you refer to the diagram on the left and set 1 to the terminal bit (terminal where the REM signal has been assigned) of *Pr. 496*, the output terminal turns on (off for negative logic). By setting 0, the output terminal turns off (on for negative logic).

上正科技有限公司
購買、維修 此手冊零組件
電話： 037-466220
Email: service@repairtw.com
Line id: @222
www.repairtw.com

Example: When "96 (positive logic)" is set in *Pr. 190 RUN terminal function selection* and "1" (H01) is set in *Pr. 496*, the terminal RUN turns on.

ON/OFF example for positive logic

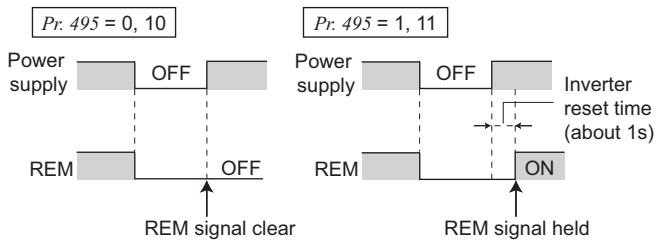

- When *Pr. 495* = "0 (initial value), 10", performing a power on reset (including a power failure) clears the REM signal output. (The ON/OFF status of the terminals are as set in *Pr. 190, Pr. 192*.) The *Pr. 496* setting becomes also "0".
  When *Pr. 495* = "1, 11", the remote output data before power off is stored into the EEPROM, so the signal output at power recovery is the same as before power off. However, it is not stored when the inverter is reset (terminal reset, reset request through communication).
  (See the chart on the left.)
- When *Pr. 495* = "10, 11", signal before rest is saved even at inverter reset.

REMARKS

- The output terminal where the REM signal is not assigned using *Pr. 190 or Pr. 192* does not turn on/off if 0/1 is set to the terminal bit of *Pr. 496 or Pr. 497*. (It turns on/off with the assigned function.)
- When the inverter is reset (terminal reset, reset request through communication), *Pr. 496* values turn to "0". When *Pr. 495* = "1, 11", however, they are the settings at power off. (The settings are stored at power off.)
  When *Pr. 495* ="10, 11", they are the same as before an inverter reset is made.

Parameters referred to

Pr. 190, Pr. 192 (output terminal function selection) ☞ *Refer to page 119*

4.11 Monitor display and monitor output signal

Purpose	Parameter that should be Set		Refer to Page
Display motor speed Set speed	Speed display and speed setting	Pr. 37	127
Change PU monitor display data	Monitor display/PU main display data selection Cumulative monitor clear	Pr. 52, Pr. 158, Pr. 170, Pr. 171, Pr. 268, Pr. 563, Pr. 564, Pr. 891	128
Change the monitor output from terminal AM	Terminal AM function selection	Pr. 158	128
Set the reference of the monitor output from terminal AM	Terminal AM standard setting	Pr. 55, Pr. 56	133
Adjust terminal AM outputs	Terminal AM calibration	Pr. 901	134

4.11.1 Speed display and speed setting (Pr. 37)

The monitor display and frequency setting of the PU (FR-PU04/FR-PU07) can be changed to the machine speed.

Parameter Number	Name	Initial Value	Setting Range	Description
37	Speed display	0	0	Frequency display, setting
			0.01 to 9998*	Machine speed at 60Hz.

The above parameter can be set when *Pr. 160 Extended function display selection* = "0". *(Refer to page 162)*

* The maximum value of the setting range differs according to the *Pr. 1 Maximum frequency*, and it can be calculated from the following formula.

$$\text{Maximum setting value of } Pr.\ 37 < \frac{16777.215 \times 60\ (\text{Hz})}{\text{Setting value of } Pr.\ 1\ (\text{Hz})}$$

Note that the maximum setting value of *Pr. 37* is 9998 if the result of the above formula exceeds 9998.

上正科技有限公司
購買、維修、出租工控零組件
電話: 03-4763333
Email: service@repairtw.com
Line Id: @92222
www.repairtw.com

- To display the machine speed, set in *Pr. 37* the machine speed for 60Hz operation.
  For example, when *Pr. 37* = "1000", "1000" is displayed on the output frequency and set frequency monitor when the running frequency is 60Hz. When running frequency is 30Hz, "500" is displayed.

Pr. 37 Setting	Output Frequency Monitor	Set Frequency Monitor	Frequency Setting	Parameter Setting
0 (initial value)	Hz	Hz	Hz	Hz
0.01 to 9998	Machine speed *1	Machine speed *1	Machine speed *1	

*1 Machine speed conversion formula .....*Pr. 37* × frequency/60Hz
*2 Hz is displayed in 0.01Hz increments and machine speed is in 0.001.

NOTE

- **Under V/F control, the output frequency of the inverter is displayed in terms of synchronous speed, and therefore, displayed value = actual speed + motor slip. The display changes to the actual speed (estimated value calculated based on the motor slip) when slip compensation was made valid.**
- **Refer to *Pr. 52* when you want to change the PU main monitor (PU main display).**
- **Since the panel display of the operation panel is 4 digits in length, the monitor value of more than "9999" is displayed as "----".**
- **When the machine speed is displayed on the FR-PU04/FR-PU07, do not change the speed by using an up/down key in the state where the set speed exceeding 65535 is displayed. The set speed may become arbitrary value.**
- **While the machine speed is displayed on the monitor, values of other parameters related to speed (*Pr. 1*, etc.) are in frequency increments. Set other parameters (*Pr.1*, etc.) related to speed in increments of frequency.**
- **Due to the limitations on the resolution of the set frequency, the indication in the second decimal place may differ from the setting.**

⚠ CAUTION

⚠ Make sure that the running speed setting is correct.
Otherwise, the motor might run at extremely high speed, damaging the machine.

Parameters referred to

Pr. 1 Maximum frequency ☞ *Refer to page 83*
Pr. 52 DU/PU main display data selection ☞ *Refer to page 128*

4.11.2 Monitor display selection of operation panel/PU and terminal AM (Pr. 52, Pr.158, Pr. 170, Pr. 171, Pr. 268, Pr. 563, Pr. 564, Pr. 891)

The monitor to be displayed on the main screen of the operation panel and parameter unit (FR-PU04/FR-PU07) can be selected.
In addition, signal to be output from the terminal AM (analog voltage output) can be selected.

Parameter Number	Name	Initial Value	Setting Range	Description
52 *	DU/PU main display data selection	0 (output frequency)	0, 5, 8 to 12, 14, 20, 23 to 25, 52 to 55, 61, 62, 64, 100	Select the monitor to be displayed on the operation panel and parameter unit. Refer to the following table for monitor description.
158 *	AM terminal function selection	1 (output frequency)	1 to 3, 5, 8 to 12, 14, 21, 24, 52, 53, 61, 62	Select the monitor output to terminal AM.
170	Watt-hour meter clear	9999	0	Set "0" to clear the watt-hour meter monitor.
			10	Set the maximum value when monitoring from communication to 0 to 9999kWh.
			9999	Set the maximum value when monitoring from communication to 0 to 65535kWh.
171	Operation hour meter clear	9999	0, 9999	Set "0" in the parameter to clear the operation time monitor. Setting 9999 does not clear.
268 *	Monitor decimal digits selection	9999	0	Displayed as integral value
			1	Displayed in 0.1 increments
			9999	No function
563	Energization time carrying-over times	0	0 to 65535 (reading only)	The numbers of cumulative energization time monitor exceeded 65535h is displayed. (Reading only)
564	Operating time carrying-over times	0	0 to 65535 (reading only)	The numbers of operation time monitor exceeded 65535h is displayed. (Reading only)
891	Cumulative power monitor digit shifted times	9999	0 to 4	Set the number of times to shift the cumulative power monitor digit. Clamp the monitoring value at maximum.
			9999	No shift Clear the monitor value when it exceeds the maximum value.

上正科技有限公司
購買、維修 此項零組件
電話： 037-466333
Email service@repairtw.com
Line id: @zzzz
www.repairtw.com

The above parameters can be set when *Pr. 160 Extended function display selection* = "0". *(Refer to page 162)*

* The above parameters allow its setting to be changed during operation in any operation mode even if "0" (initial value) is set in *Pr. 77 Parameter write selection*.

(1) Monitor description list *(Pr. 52)*

- Set the monitor to be displayed on the operation panel and parameter unit (FR-PU04/FR-PU07) in *Pr. 52 DU/PU main display data selection* .
- Set the monitor to be output to the terminal AM (analog voltage output) in *Pr. 158 AM terminal function selection* .
- Refer to the following table and set the monitor to be displayed. (The monitor marked with × cannot be selected.)

Types of Monitor	Unit	*Pr. 52* Setting		*Pr.158* (AM) Setting	Terminal AM Full Scale Value		Description
		Operation panel LED	PU main monitor				
Output frequency	0.01Hz	0/100		1	*Pr. 55*		Displays the inverter output frequency.
Output current	0.01A	0/100		2	*Pr. 56*		Displays the inverter output current effective value.
Output voltage	0.1V	0/100		3	200V class	400V	Displays the inverter output voltage.
					400V class	800V	
Fault display	—	0/100		×	—		Displays past 8 faults individually.
Frequency setting value	0.01Hz	5	*1	5	*Pr. 55*		Displays the set frequency.
Converter output voltage	0.1V	8	*1	8	200V class	400V	Displays the DC bus voltage value.
					400V class	800V	

Types of Monitor	Unit	*Pr. 52* Setting		*Pr.158* (AM) Setting	Terminal AM Full Scale Value		Description
		Operation panel LED	PU main monitor				
Regenerative brake duty	0.1%	9	∗1	9	*Pr. 70*		Brake duty set in *Pr. 30, Pr. 70*
Electronic thermal relay function load factor	0.1%	10	∗1	10	100%		Displays the thermal cumulative value on the assumption that the thermal operation level is 100% (Larger thermal between the motor thermal and transistor thermal). ∗6
Output current peak value	0.01A	11	∗1	11	*Pr. 56*		Holds and displays the peak value of the output power monitor. (Cleared at every start)
Converter output voltage peak value	0.1V	12	∗1	12	200V class	400V	Holds and displays the peak value of the DC bus voltage value. (Cleared at every start)
					400V class	800V	
Output power	0.01kW	14	∗1	14	Rated inverter power × 2		Displays the power on the inverter output side
Input terminal status	—	—	∗1	×	—		Displays the input terminal ON/OFF status on the operation panel. (*Refer to page 131*)
Output terminal status	—		∗1	×	—		Displays the output terminal ON/OFF status on the operation panel. (*Refer to page 131*)
Cumulative energization time ∗2	1h	20		×	—		Adds up and displays the energization time after inverter shipment. You can check the numbers of the monitor value exceeded 65535h with *Pr. 563*.
Reference voltage output	—	—		21	—		Terminal AM: Output 10V
Actual operation time ∗2, ∗3	1h	23		×	—		Adds up and displays the inverter operation time. You can check the numbers of the monitor value exceeded 65535h with *Pr. 564*. Can be cleared by *Pr. 171*. *(Refer to page 132)*
Motor load factor	0.1%	24		24	200%		Displays the output current value on the assumption that the inverter rated current value is 100%. Monitor value = output power monitor value/rated inverter current 100 [%]
Cumulative power ∗5	0.01kWh ∗4	25		×	—		Adds up and displays the power amount based on the output power monitor. Can be cleared by *Pr. 170*. *(Refer to page 131)*
PID set point	0.1%	52		52	100%		Displays the set point, measured value and deviation during PID control (*Refer to page 217* for details)
PID measured value	0.1%	53		53	100%		
PID deviation	0.1%	54		×	—		
Inverter I/O terminal monitor	—	55	×	×	—		Displays the ON/OFF status of the inverter input terminal and output terminal on the operation panel (*Refer to page 131* for details)
Motor thermal load factor	0.1%	61		61	Thermal relay operation level (100%)		Motor thermal heat cumulative value is displayed. (Motor overload trip (E.THM) at 100%)
Inverter thermal load factor	0.1%	62		62	Thermal relay operation level (100%)		Transistor thermal heat cumulative value is displayed. (Inverter overload trip (E.THT) at 100%)
PTC thermistor resistance	0.01kΩ	64		×	—		Displays the PTC thermistor resistance at terminal 2 when PTC thermistor protection is active. (0.10kΩ to 31.5kΩ) *(Refer to page 100)*

上正科技有限公司
購買、維修 此手冊零組件
電話： 037-466333
Email: service@repairtw.com
Line id: @zzzz
www.repairtw.com

*1 Frequency setting to output terminal status on the PU main monitor are selected by "other monitor selection" of the parameter unit (FR-PU04/FR-PU07).
*2 The cumulative energization time and actual operation time are accumulated from 0 to 65535 hours, then cleared, and accumulated again from 0. When the operation panel is used, the time is displayed up to 65.53 (65530h) in the indication of 1h = 0.001, and thereafter, it is added up from 0.
*3 Actual operation time is not accumulated when the cumulative operation time is less than 1h until turning off of the power supply.
*4 When using the parameter unit (FR-PU04/FR-PU07), "kW" is displayed.
*5 Since the panel display of the operation panel is 4 digits in length, the monitor value of more than "9999" is displayed as "----".
*6 Larger thermal value between the motor thermal and transistor thermal is displayed. A value other than 0% is displayed if the surrounding air temperature (heatsink temperature) is high even when the inverter is at a stop.

REMARKS

- By setting "0" in *Pr. 52*, the monitoring of output speed to fault display can be selected in sequence by SET.
- When the operation panel is used, the displayed units are Hz and A only, and the others are not displayed.
- The monitor set in *Pr. 52* is displayed in the third monitor position. However, change the output current monitor for the motor load factor.

Initial Value

*The monitor displayed at powering on is the first monitor. Display the monitor you want to display on the first monitor and hold down SET for 1s. (To return to the output frequency monitor, hold down SET for 1s after displaying the output frequency monitor.)

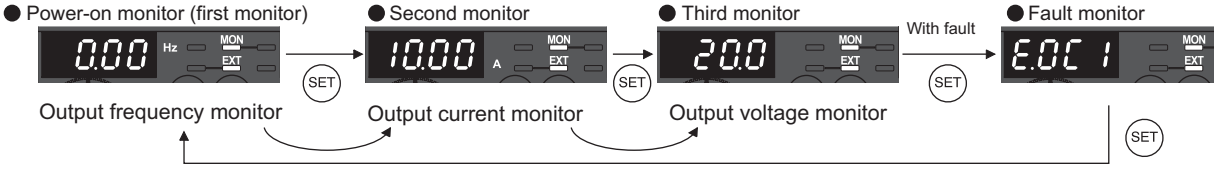

Example)When *Pr. 52* is set to "20" (cumulative energization time), the monitor is displayed on the operation panel as described below.

上正科技有限公司
維修、銷售、此手冊製作
電話：02-2918-2313
Email: service@repairtw.com
Line id: @zzzz
www.repairtw.com

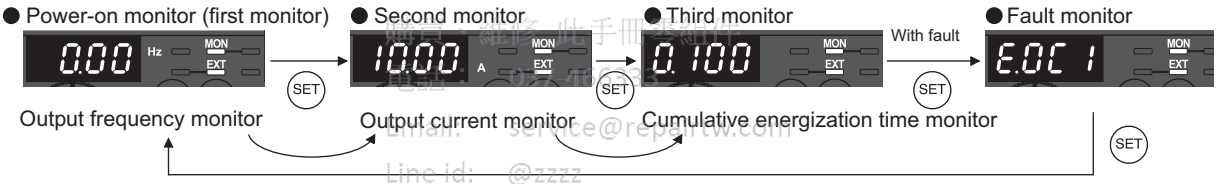

(2) Display set frequency during stop *(Pr. 52)*

- When "100" is set in *Pr. 52*, the set frequency and output frequency are displayed during stop and operation respectively. (LED of Hz flickers during stop and is lit during operation.)

	Pr. 52		
	0	100	
	During running/stop	During stop	During running
Output frequency	Output frequency	Set frequency*	Output frequency
Output current	Output current		
Output voltage	Output voltage		
Fault display	Fault display		

* The set frequency displayed indicates the frequency to be output when the start command is on. Different from the frequency setting displayed when *Pr. 52* = "5", the value based on maximum/minimum frequency and frequency jump is displayed.

REMARKS

- During an error, the output frequency at error occurrence appears.
- During MRS signal is ON, the values displayed are the same as during a stop.
- During offline auto tuning, the tuning status monitor has priority.

(3) Operation panel I/O terminal monitor *(Pr. 52)*

- When *Pr. 52* = "55", the I/O terminal status can be monitored on the operation panel.
- The I/O terminal monitor is displayed on the third monitor.
- The LED is ON when the terminal is ON, and the LED is OFF when the terminal is OFF. The center line of LED is always ON.
- On the I/O terminal monitor (*Pr. 52* = "55"), the upper LEDs denote the input terminal status and the lower the output terminal status.

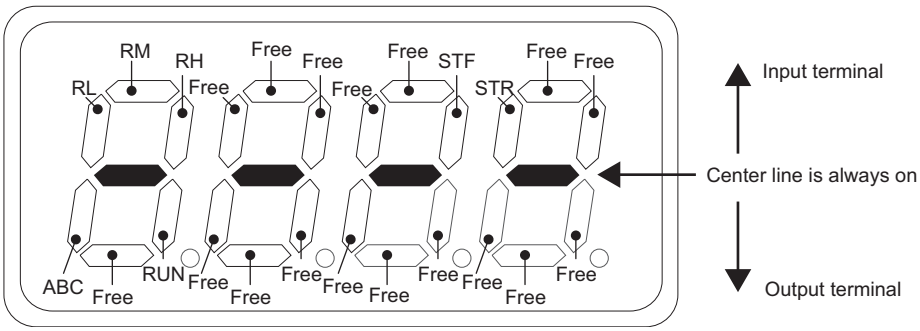

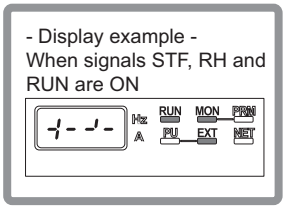

(4) Cumulative power monitor and clear *(Pr. 170, Pr. 891)*

- On the cumulative power monitor (*Pr. 52* = "25"), the output power monitor value is added up and is updated in 1h increments.
- The operation panel, parameter unit (FR-PU04/FR-PU07) and communication (RS-485 communication) display increments and display ranges are as indicated below.

上正科技有限公司
購買、維修、此型號零組件
電話 037-466333
Email service@repairtw.com
www.repairtw.com

Operation Panel *1		Parameter Unit *2		Communication		
Range	Unit	Range	Unit	Range		Unit
				Pr. 170 = 10	*Pr. 170* = 9999	
0 to 99.99kWh	0.01kWh	0 to 999.99kWh	0.01kWh	0 to 9999kWh	0 to 65535kWh (initial value)	1kWh/ 0.01kWh *3
100.0 to 999.9kWh	0.1kWh	1000.0 to 9999.9kWh	0.1kWh			
1000 to 9999kWh	1kWh	10000 to 99999kWh	1kWh			

*1 Power is measured in the range of 0 to 9999.99kWh, and displayed in 4 digits.
When the monitor value exceeds "99.99", a carry occurs, e.g. "100.0", so the value is displayed in 0.1kWh increments.

*2 Power is measured in the range of 0 to 99999.99kWh, and displayed in 5 digits.
When the monitor value exceeds "999.99", a carry occurs, e.g. "1000.0", so the value is displayed in 0.1kWh increments.

*3 In monitoring with communication, cumulative power is displayed in 1kWh increments. And cumulative power 2 is displayed in 0.01kWh. (*Refer to page 188* for communication)

- The monitor data digit can be shifted to the right by the number of *Pr. 891* settings.
  For example, if the cumulative power value is 1278.56kWh when *Pr. 891* = "2", the operation panel display or parameter unit (FR-PU04/FR-PU07) display is 12.78 (display in 100kWh increments) and the communication data is 12.
- If the maximum value is exceeded at *Pr. 891* = "0 to 4", the power is clamped at the maximum value, indicating that a digit shift is necessary. If the maximum value is exceeded at *Pr. 891* = "9999", the power returns to 0 and is recounted.
  If the maximum value is exceeded at *Pr. 891* = "9999", the power returns to 0 and is recounted.
- Writing "0" in *Pr. 170* clears the cumulative power monitor.

REMARKS

- If "0" is written to *Pr. 170* and *Pr. 170* is read again, "9999" or "10" is displayed.

(5) Cumulative energization time and actual operation time monitor *(Pr. 171, Pr. 563, Pr. 564)*

- Cumulative energization time monitor (*Pr. 52* = "20") accumulates energization time from shipment of the inverter every one hour.
- On the actual operation time monitor (*Pr. 52* = "23"), the inverter running time is added up every hour. (Time is not added up during a stop.)
- If the monitored value exceeds 65535, it is added up from 0. You can check the numbers of cumulative energization time monitor exceeded 65535h with *Pr. 563* and the numbers of actual operation time monitor exceeded 65535h with *Pr. 564*.
- Writing "0" to *Pr. 171* clears the cumulative energization power monitor. (The cumulative time monitor can not be cleared.)

REMARKS

- The actual operation time is not added up unless the inverter is operated one or more hours continuously.
- If "0" is written to *Pr. 171* and *Pr. 171* is read again, "9999" is always displayed. Setting "9999" does not clear the actual operation time meter.

(6) You can select the decimal digits of the monitor *(Pr. 268)*

- As the operation panel display is 4 digits long, the decimal places may vary at analog input, etc. The decimal places can be hidden by selecting the decimal digits.
  In such a case, the decimal digits can be selected by *Pr. 268*.

Pr. 268 Setting	Description
9999 (initial value)	No function
0	For the first or second decimal places (0.1 increments or 0.01 increments) of the monitor, numbers in the first decimal place and smaller are rounded to display an integral value (1 increments).The monitor value smaller than 0.99 is displayed as 0.
1	When 2 decimal places (0.01 increments) are monitored, the 0.01 decimal place is dropped and the monitor displays the first decimal place (0.1 increments). The monitored digits in 1 increments are displayed as they are.

上立科技有限公司
購買、維修 此手冊零組件
電話： 037-466333
Email: service@repairtw.com
Line id: @zzzz
www.repairtw.com

REMARKS

- The number of display digits on the cumulative energization time (*Pr. 52* = "20") and actual operation time (*Pr. 52* = "23") does not change.

Parameters referred to

Pr. 30 Regenerative function selection, Pr. 70 Special regenerative brake duty ☞ *Refer to page 110*
Pr. 37 Speed display ☞ *Refer to page 127*
Pr. 55 Frequency monitoring reference, Pr. 56 Current monitoring reference ☞ *Refer to page 133*

4.11.3 Reference of the terminal AM (analog voltage output) (Pr. 55, Pr. 56)

Analog voltage output from the terminal AM is available.
Set the reference of the signal output from terminal AM.

Parameter Number	Name	Initial Value	Setting Range	Description
55*	**Frequency monitoring reference**	60Hz	0 to 400Hz	Full-scale value when frequency monitor value is output to terminal AM.
56*	**Current monitoring reference**	Inverter rated current	0 to 500A	Full-scale value when current monitor value is output to terminal AM.

The above parameters can be set when *Pr. 160 Extended function display selection* = "0". *(Refer to page 162)*

* The above parameters allow its setting to be changed during operation in any operation mode even if "0" (initial value) is set in *Pr. 77 Parameter write selection*.

(1) Frequency monitoring reference (*Pr. 55*)

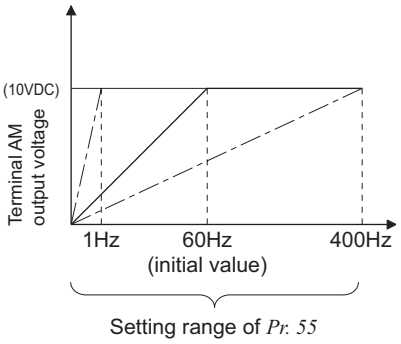

- Set the frequency when the optional frequency meter (DC voltmeter 10VDC) shows 60Hz or 120Hz (shows full scale) which is connected to the terminal AM and 5.
- Set the frequency (output frequency/set frequency) when the voltage output at terminal AM is 10VDC.
- The analog voltage output and frequency at terminal AM are proportional. (The maximum output voltage is 10VDC.)

上正科技有限公司
購買、維修 此手冊零組件
電話: 037-466333
Email: service@repairtw.com
Line id: @ezz
www.repairtw.com

(2) Current monitoring reference (*Pr. 56*)

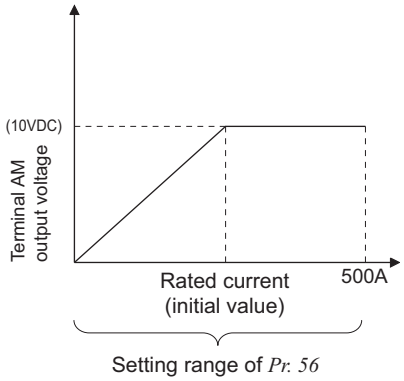

- Set the current to be referenced when the current monitor (inverter output current, etc.) is selected for terminal AM display.
- Set the current value when the voltage output at terminal AM is 10VDC.
- The analog voltage output and current value at terminal AM are proportional. (The maximum output voltage is 10VDC.)

4.11.4 Terminal AM calibration (calibration parameter C1 (Pr.901))

By using the operation panel or parameter unit, you can calibrate terminal AM to full scale deflection.

Parameter Number	Name	Initial Value	Setting Range	Description
C1 (901)	AM terminal calibration	—	—	Calibrates the scale of the meter connected to terminal AM.

*1 The above parameter can be set when *Pr. 160 Extended function display selection* = "0". *(Refer to page 162)*

*2 The parameter number in parentheses is the one for use with the operation panel (PA02) for the FR-E500 series or parameter unit (FR-PU04/FR-PU07).

*3 The above parameter allow its setting to be changed during operation in any operation mode even if "0" (initial value) is set in *Pr. 77 Parameter write selection*.

(1) Terminal AM gain calibration *(C1 (Pr. 901))*

· Terminal AM is factory-set to provide a 10VDC output in the full-scale status of the corresponding monitor item. *Calibration parameter C1 (Pr. 901)* allows the output voltage ratios (gains) to be adjusted according to the meter scale. Note that the maximum output voltage is 10VDC.

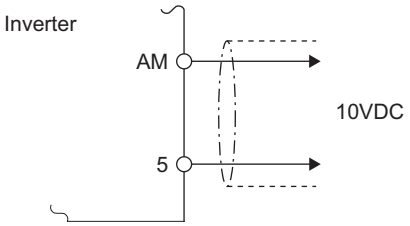

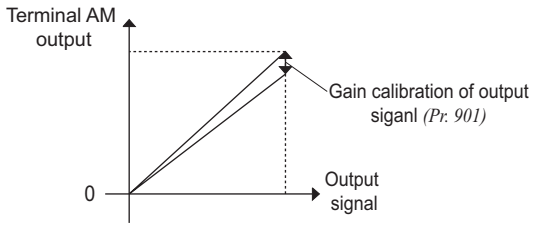

上正科技有限公司
購買、維修、此手機零組件
電話： 037-466333
Email: service@repairtw.com
Line id: @7777
www.repairtw.com

· Calibrate the terminal AM gain in the following procedure.

1) Connect a 0-10VDC meter (frequency meter) to across inverter terminals AM-5. (Note the polarity. The terminal AM is positive.)

2) Refer to the monitor description list *(page 128)* and set *Pr. 158*.
When you selected the running frequency, inverter output current, etc. as monitor, preset in *Pr. 55* or *Pr. 56* the running frequency or current value at which the output signal will be 10V.

3) When outputting the item that cannot achieve a 100% value easily by operation, e.g. output current, set "21" (reference voltage output) in *Pr. 158* and perform the following operation. After that, set "2" (output current, for example) in *Pr. 158*.

REMARKS

- When outputting such an item as the output current, which cannot reach a 100% value easily by operation, set *Pr. 158* to "21" (reference voltage output) and make calibration. 10VDC is output from the terminal AM.

(2) How to calibrate the terminal AM when using the operation panel

Operation	Display
1. Confirm the RUN indication and operation mode indication	(When *Pr. 158* = 1) 0.00 Hz MON PU PRM indication is lit.
2. Press MODE to choose the parameter setting mode.	MODE ⇨ P. 0 PRM (The parameter number read previously appears.)
3. Turn ◎ until C. . . appears.	◎ ⇨ C - - - (C1 to C7 settings are enabled.)
4. Turn SET until C - - - appears.	SET ⇨ C - - -
5. Turn ◎ until C 1 appears. Set to *C1 AM terminal calibration.*	◎ ⇨ C 1
6. Press SET to enable setting.	SET ⇨ 0.00 Hz (The monitor set to *Pr. 158 AM terminal function selection* is displayed.)
7. If the inverter is at a stop, press the RUN key to start the inverter. (Motor needs not be connected.)	RUN ⇨ 0.00 Hz MON PU
8. Turn ◎ to adjust the indicator needle to the desired position.	◎ (+ / −) ⇨ Analog indicator
9. Press SET. Setting is complete.	SET ⇨ 60.00 Hz ↔ C 1 **Flicker...Parameter setting complete!!**

上正科技有限公司
購買、維修、手機零組件
電話： 037-456333
Email: service@repairw
Line id: @zzzz
www.repairw.com

- Turn ◎ to read another parameter.
- Press SET to return to the C - - - indication (step 4).
- Press SET twice to show the next parameter (Pr.CL).

REMARKS

- Calibration can also be made for external operation. Set the frequency in the external operation mode, and make calibration in the above procedure.
- Calibration can be made even during operation.
- For operation from the parameter unit (FR-PU04/FR-PU07), refer to the instruction manual of the parameter unit.

Parameters referred to

Pr. 55 Frequency monitoring reference ☞ *Refer to page 133*
Pr. 56 Current monitoring reference ☞ *Refer to page 133*
Pr. 158 AM terminal function selection ☞ *Refer to page 128*

4.12 Operation selection at power failure and instantaneous power failure

Purpose	Parameter that should be Set		Refer to Page
At instantaneous power failure occurrence, restart inverter without stopping motor	Automatic restart operation after instantaneous power failure/flying start	Pr. 30, Pr. 57, Pr. 58, Pr. 96, Pr. 162, Pr. 165, Pr. 298, Pr. 299, Pr. 611	136
When undervoltage or a power failure occurs, the inverter can be decelerated to a stop.	Power failure-time deceleration-to-stop function	Pr. 261	142

4.12.1 Automatic restart after instantaneous power failure/flying start (Pr. 30, Pr. 57, Pr. 58, Pr. 96, Pr. 162, Pr. 165, Pr. 298, Pr. 299, Pr. 611)

You can restart the inverter without stopping the motor in the following cases:
- When power comes back on after an instantaneous power failure
- When motor is coasting at start

Parameter Number	Name	Initial Value	Setting Range	Description
30	Regenerative function selection	0	0, 1	The motor starts at the starting frequency when MRS (X10) turns on then off
			2	Restart operation is performed when MRS (X10) turns on then off
57	Restart coasting time	9999	0	FR-D720-070 or less, FR-D740-036 or less, FR-D720S-070 or less.....1s FR-D720-100 or more, FR-D740-050 or more, FR-D720S-100 .....2s The above times are coasting time.
			0.1 to 5s	Waiting time for inverter-triggered restart after an instantaneous power failure.
			9999	No restart
58	Restart cushion time	1s	0 to 60s	Voltage starting time at restart.
96	Auto tuning setting/status	0	0	Offline auto tuning is not performed
			11	For General-purpose magnetic flux vector control Offline auto tuning is performed without motor running (motor constants (R1) only) *(Refer to page 75)*
			21	Offline auto tuning (tuning performed without motor running) for V/F control and automatic restart after instantaneous power failure (with frequency search)
162	Automatic restart after instantaneous power failure selection	1	0	With frequency search
			1	Without frequency search (reduced voltage system)
			10	Frequency search at every start
			11	Reduced voltage at every start
165	Stall prevention operation level for restart	150%	0 to 200%	Considers the rated inverter current as 100% and sets the stall prevention operation level during restart operation.
298	Frequency search gain	9999	0 to 32767	When offline auto tuning is performed under V/F control, frequency search gain necessary for frequency search for automatic restart after instantaneous power failure is set as well as the motor constants (R1).
			9999	Uses the Mitsubishi motor (SF-JR, SF-HR, SF-JRCA, SF-HRCA) constants
299	Rotation direction detection selection at restarting	0	0	Without rotation direction detection
			1	With rotation direction detection
			9999	When *Pr. 78* = 0, With rotation direction detection When *Pr. 78* = 1, 2 Without rotation direction detection
611	Acceleration time at a restart	9999	0 to 3600s	Acceleration time to reach *Pr.20 Acceleration/deceleration reference frequency* at a restart.
			9999	Acceleration time for restart is the normal acceleration time (e.g. *Pr. 7*)

The above parameters can be set when *Pr. 160 Extended function display selection* = "0". *(Refer to page 162)*

上正科技有限公司
購買、維修、出手機器請洽
電話：037-466337
Email: service@repairtw.com
Line id: @zzzz
www.repairtw.com

When *Pr. 162* = 1, 11 (without frequency search)

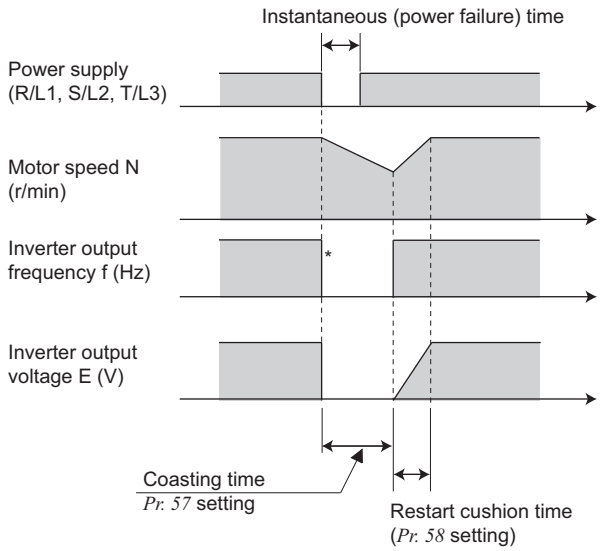

* The output shut off timing differs according to the load condition.

When *Pr. 162* = 0, 10 (with frequency search)

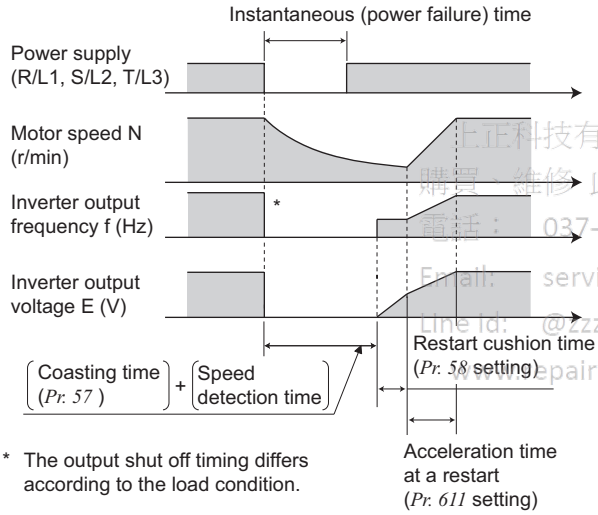

* The output shut off timing differs according to the load condition.

(1) Automatic restart operation selection

(Pr. 30, Pr. 162, Pr. 299)

● **Without frequency search**

When *Pr. 162* = "1 or 11", automatic restart operation is performed in a reduced voltage system, where the voltage is gradually risen with the output frequency unchanged from prior to an instantaneous power failure independently of the coasting speed of the motor.

REMARKS

- This system stores the output frequency and rotation direction prior to an instantaneous power failure and restart using the stored value. Therefore, if the instantaneous power failure time exceeds 0.2s and the stored value cannot be retained, the inverter starts at *Pr. 13 Starting frequency* (initial value = 0.5Hz) in the starting direction upon power restoration.

● **With frequency search**

When "0 (initial value) or 10" is set in *Pr. 162*, the inverter smoothly starts after detecting the motor speed upon power restoration. (The motor capacity should be equal to or one rank lower than the inverter capacity)

When using the frequency search, perform offline auto tuning.

(Refer to page *105* for general-purpose magnetic flux vector control and *page 139* for V/F control.)

•During reverse rotation, the inverter can be restarted smoothly as the direction of rotation is detected.

•You can select whether to make rotation direction detection or not with *Pr. 299 Rotation direction detection selection at restarting*.

When capacities of the motor and inverter differ, set "0" (without rotation direction detection) in *Pr. 299*.

Pr. 299 Setting	*Pr. 78* Setting		
	0	1	2
9999	○	×	×
0 (initial value)	×	×	×
1	○	○	○

○: the rotation direction is detected.

×: the rotation direction is not detected.

上正科技有限公司
購買、維修、此手冊零組件
電話： 037-466333
Email: service@repairtw.com
Line Id: @zzzz
www.repairtw.com

REMARKS

- Speed detection time (frequency search) changes according to the motor speed. (maximum 100ms)
- When the inverter capacity is two rank or more larger than the motor capacity, the inverter may not start due to overcurrent trip (E.OC□).
- If two or more motors are connected to one inverter, the inverter functions abnormally. (The inverter does not start smoothly.)
- When reverse rotation is detected under the condition of *Pr. 78* = "1" (reverse rotation disabled), the rotation direction is changed to forward rotation after decelerates in reverse rotation when the start command is forward rotation. The inverter will not start when the start command is reverse rotation.

NOTE

- When automatic restart operation after instantaneous power failure is activated while the motor is running at a low speed (less than 10Hz), the motor restarts in the direction prior to instantaneous power failure without detecting the rotation direction (*Pr. 299 Rotation direction detection selection at restarting* = "1").
- If the frequency search result exceeds the set frequency, the output frequency is limited at the set frequency.
- When the wiring length exceeds below, select without frequency search (*Pr. 162* = "1, 11").

Motor capacity	0.1K	0.2K	0.4K or more
Wiring length	20m (65.61feet)	50m (164.04feet)	100m (323.08feet)

● **Restart operation at every start**

When *Pr. 162* = "10 or 11", automatic restart operation is also performed every start, in addition to the automatic restart after instantaneous power failure. When *Pr. 162* = "0", automatic restart operation is performed at the first start after power supply on, but not performed at the second time or later.

● **Automatic restart operation selection of MRS (X10) signal (When *Pr. 162* = "0, 1")**

Restart operation after turning MRS (X10) signal on then off using *Pr. 30* can be selected as in the table below. When automatic restart after instantaneous power failure is selected while using the high power factor converter (FR-HC), noramally set "2" in *Pr. 30*.

Pr. 30 Setting	Operation after MRS and X10 Signal Turns off, on, then off.
0, 1	Start at the *Pr. 13 Starting frequency*.
2	Frequency search is made and starts at the coasting speed.

(2) Restart coasting time *(Pr. 57)*

•Coasting time is the time from when the motor speed is detected until automatic restart control is started.

•Set *Pr. 57* to "0" to perform automatic restart operation.

The coasting time is automatically set to the value below. Generally this setting will pose no problems.

FR-D720-070 or less, FR-D740-036 or less, FR-D720S-070 or less 1s

FR-D720-100 or more, FR-D740-050 or more, FR-D720S-100 .....2s

•Operation may not be performed well depending on the magnitude of the moment of inertia (J) of the load or running frequency. Adjust the coasting time between 0.1s and 5s according to the load specifications.

上立科技有限公司
購買：維修/代手冊零組件
電話： 037-466333
Email: service@repairtw.com
Line id: @zzzz
www.repairtw.com

(3) Restart cushion time *(Pr. 58)*

•Cushion time is the length of time taken to raise the voltage appropriate to detected motor speed (output frequency prior to instantaneous power failure when *Pr. 162* = "1, 11") from 0V.

•Normally the initial value need not be changed for operation, but adjust it according to the magnitude of the moment of inertia (J) of the load or torque.

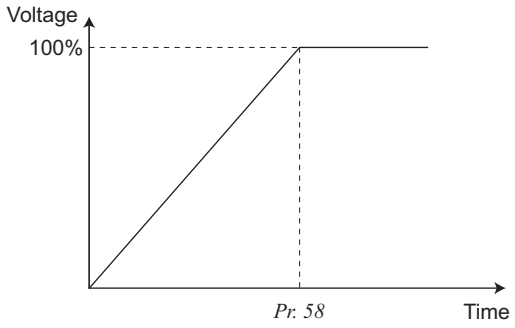

(4) Automatic restart operation adjustment *(Pr. 165, Pr. 611)*

•Using *Pr. 165*, you can set the stall prevention operation level at a restart.

•Using *Pr. 611*, you can set the acceleration time until *Pr.20 Acceleration/deceleration reference frequency* is reached when automatic restart operation is performed besides the normal acceleration time.

(5) Frequency search gain *(Pr. 298)*, offline auto tuning *(Pr. 96)*

- When automatic restart after instantaneous power failure operation (with frequency search) is valid at V/F control, perform offline auto tuning.
- Perform offline auto tuning during V/F control in the following order to set *Pr. 298 Frequency search gain* automatically. (Refer to *page 105* during General-purpose magnetic flux vector control.)

●Before performing offline auto tuning

Check the following before performing offline auto tuning.

- The inverter is under V/F control
- A motor should be connected. Note that the motor should be at a stop at a tuning start.
- The motor capacity should be equal to or one rank lower than the inverter capacity. (note that the capacity is 0.1kW or more)
- The maximum frequency is 120Hz.
- A high-slip motor, high-speed motor and special motor cannot be tuned.
- The motor may run slightly. Therefore, fix the motor securely with a mechanical brake, or before tuning, make sure that there will be no problem in safety if the motor runs (caution is required especially in vertical lift applications). Note that tuning performance is unaffected even if the motor runs slightly.
- Offline auto tuning will not be performed properly if it is performed with a surge voltage suppression filter (FR-ASFH, FR-BMF-H) connected between the inverter and motor. Remove it before starting tuning.

●Setting

1) Set "21" in *Pr. 96 Auto tuning setting/status*.
   Tuning is performed without motor running.
2) Set the rated motor current (initial value is rated inverter current) in *Pr. 9 Electronic thermal O/L relay*. *(Refer to page 100)*
3) Set *Pr. 71 Applied motor* according to the motor used.

Motor		*Pr.71* Setting *1
Mitsubishi standard motor Mitsubishi high efficiency motor	SF-JR	3
	SF-JR 4P 1.5kW or less	23
	SF-HR	43
	Others	3
Mitsubishi constant-torque motor	SF-JRCA 4P	13
	SF-HRCA	53
	Others (SF-JRC, etc.)	13
Other manufacturer's standard motor	—	3
Other manufacturer's constant-torque motor	—	13

*1 Refer to *page 103*, for other settings of *Pr. 71*.

上正科技有限公司
歡迎洽詢 伺服馬達 步進馬達 減速機 手冊零組件
電話： 037-466333
Email: service@repairtw.com
Line id: @zzzz
www.repairtw.com

●Execution of tuning

POINT

Before performing tuning, check the monitor display of the operation panel or parameter unit (FR-PU04/FR-PU07) if the inverter is in the status for tuning. (Refer to 2) below)

1) When performing PU operation, press RUN of the operation panel.

For external operation, turn ON the start command (STF signal or STR signal). Tuning starts.
(Excitation noise is produced during tuning.)

NOTE

- **To force tuning to end, use the MRS or RES signal or press STOP/RESET of the operation panel. (Turning the start signal (STF signal or STR signal) OFF also ends tuning.)**
- **During offline auto tuning, only the following I/O signals are valid: (initial value)**
  •Input terminal <Valid signal> STF, STR
  •Output terminal RUN, AM, A, B, C
  Note that the progress status of offline auto tuning is output in five steps from AM when speed and output frequency are selected.
- **Since the RUN signal turns ON when tuning is started, caution is required especially when a sequerence which releases a mechanical brake by the RUN signal has been designed.**
- **When executing offline auto tuning, input the run command after switching on the main circuit power (R/L1, S/L2, T/L3) of the inverter.**
- **Do not perform ON/OFF switching of the second function selection signal (RT) during execution of offline auto tuning. Auto tuning is not excecuted properly.**

2) Monitor is displayed on the operation panel and parameter unit (FR-PU04, FR-PU07) during tuning as below.

	Parameter Unit (FR-PU04, FR-PU07)	Operation Panel Indication
Pr. 96 setting	21	21
(1) Setting	READ:List 21 ---STOP PU	21 MON EXT
(2) Tuning in progress	TUNE 22 STF FWD PU	22 RUN MON EXT
(3) Normal end	TUNE 23 COMPLETION STF STOP PU	Flickering 23 RUN MON EXT
(4) Error end (when inverter protective function operation is activated)	TUNE ERROR 9 STF STOP PU	9 RUN MON EXT

上元科技有限公司
歡迎購買日本三菱零組件
電話： 037-466833
Email: service@repairtw.com
Line ID: @7777
www.repairtw.com

REMARKS

It takes approximately 9s until tuning is completed.

3) When offline auto tuning ends, press STOP/RESET of the operation panel during PU operation. For external operation, turn OFF the start signal (STF signal or STR signal) once.
This operation resets the offline auto tuning and the PU's monitor display returns to the normal indication.
(Without this operation, next operation cannot be started.)

4) If offline auto tuning ended in error (see the table below), motor constants are not set.
Perform an inverter reset and restart tuning.

Error Display	Error Cause	Remedy
8	Forced end	Set "21" in *Pr. 96* and perform tuning again.
9	Inverter protective function operation	Make setting again.
91	Current limit (stall prevention) function was activated.	Set "1" in *Pr. 156*.
92	Converter output voltage reached 75% of rated value.	Check for fluctuation of power supply voltage.
93	Calculation error A motor is not connected.	Check the motor wiring and make setting again. Set the rated current of the motor in *Pr. 9*.

5) When tuning is ended forcibly by pressing STOP/RESET or turning OFF the start signal (STF or STR) during tuning, offline auto tuning does not end properly. (The motor constants have not been set.)
Perform an inverter reset and restart tuning.

6) When using the motor corresponding to the following specifications and conditions, reset *Pr.9 Electronic thermal O/L relay* as below after tuning is completed.
   a) When the rated power specifications of the motor is 200/220V(400/440V) 60Hz, set 1.1 times rated motor current value in *Pr.9*.
   b) When performing motor protection from overheat using a PTC thermistor or motor with temperature detector such as Klixon, set "0" (motor overheat protection by the inverter is invalid) in *Pr.9*.

NOTE

- **The motor constants measured once in the offline auto tuning are stored as parameters and their data are held until the offline auto tuning is performed again.**
- **An instantaneous power failure occurring during tuning will result in a tuning error.**
  After power is restored, the inverter goes into the normal operation mode. Therefore, when STF (STR) signal is ON, the motor runs in the forward (reverse) rotation.
- **Any alarm occurring during tuning is handled as in the ordinary mode. Note that if a fault retry has been set, retry is ignored.**
- **The set frequency monitor displayed during the offline auto tuning is 0Hz.**
- **Changing the terminal assignment using *Pr.178 to Pr.182 (input terminal function selection)* may affect the other functions. Make setting after confirming the function of each terminal.**
- **The SU and FU signals are not output during a restart. They are output after the restart cushion time has elapsed.**
- **Automatic restart operation will also be performed after a reset or when a retry is made by the retry function.**

上海科技有限公司
購買、維修、此手冊零組件
電話: 087-466333
Email: service@repairtw.com
Line id: @zzzz
www.repairtw.com

⚠ CAUTION

⚠ **When automatic restart after instantaneous power failure has been selected, the motor and machine will start suddenly (after the reset time has elapsed) after occurrence of an instantaneous power failure.**
Stay away from the motor and machine.
When you have selected automatic restart after instantaneous power failure function, apply in easily visible places the CAUTION stickers supplied to the Installation guideline.

⚠ **When the start signal is turned off or STOP/RESET is pressed during the restart cushion time after instantaneous power failure, deceleration starts after *Pr. 58 Restart cushion time* has elapsed.**

Parameters referred to

Pr. 7 Acceleration time ☞ *Refer to page 96*
Pr. 13 Starting frequency ☞ *Refer to page 98*
Pr. 65, Pr. 67 to Pr. 69 Retry function ☞ *Refer to page 144*
Pr. 71 Applied motor ☞ *Refer to page 103*
Pr. 78 Reverse rotation prevention selection ☞ *Refer to page 162*
Pr. 178 to Pr. 182 (input terminal function selection) ☞ *Refer to page 113*

4.12.2 Power-failure deceleration stop function (Pr. 261)

When a power failure or undervoltage occurs, the inverter can be decelerated to a stop or can be decelerated and re-accelerated to the set frequency.

Parameter Number	Name	Initial Value	Setting Range	Description
261	Power failure stop selection	0	0	Coasts to stop. When undervoltage or power failure occurs, the inverter output is shut off.
			1	When undervoltage or a power failure occurs, the inverter can be decelerated to a stop.
			2	When undervoltage or a power failure occurs, the inverter can be decelerated to a stop. If power is restored during a power failure, the inverter accelerates again.

The above parameter can be set when *Pr. 160 Extended function display selection* = "0". *(Refer to page 162)*

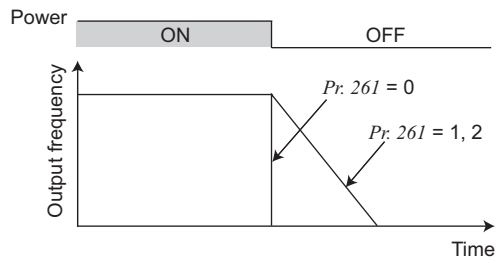

(1) Parameter setting

•When *Pr. 261* is set to "1 or 2", the inverter decelerates to a stop if an undervoltage or power failure occurs.

(2) Operation outline of deceleration to stop at power failure

•When undervoltage or power failure occurs, the output frequency is decreased and controled so that the converter circuit (DC bus) voltage is constant and decreased to 0Hz to stop.

上正科技有限公司
購買、維修 此手冊零組件
電話： 037-466333
Email: service@repairtw.com
Line id: @3333
www.repairtw.com

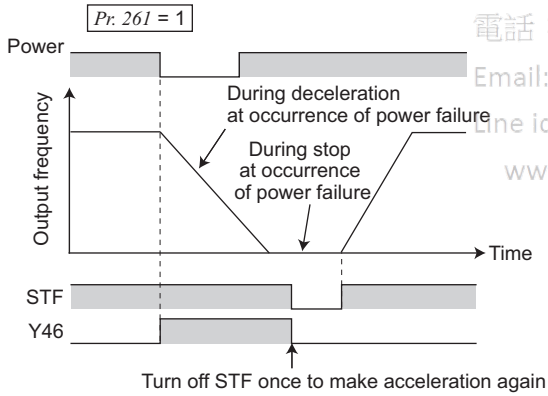

(3) Power failure stop function (*Pr. 261* = "1")

•If power is restored during power failure deceleration, deceleration to a stop is continued and the inverter remains stopped. To restart, turn OFF the start signal once, then turn it ON again.

REMARKS

- When automatic restart after instantaneous power failure is selected (*Pr. 57* ≠ "9999"), power failure stop function is made invalid and automatic restart operation after instantaneous power failure is valid.
- After a power failure stop, the inverter will not start even if the power is restored with the start signal (STF/STR) input. After switching on the power, turn OFF the start signal once and then on again to make a start.

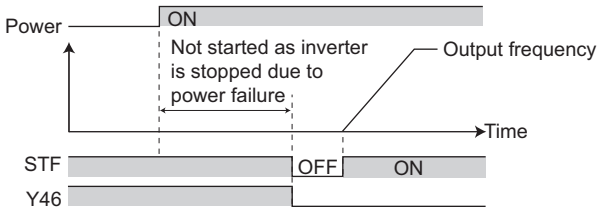

(4) Operation continuation at instantaneous power failure function (*Pr. 261* = "2")

- When power is restored during deceleration after a power failure, acceleration is made again up to the set frequency.
- When this function is used in combination with the automatic restart after instantaneous power failure function(*Pr.57* ≠ "9999"), deceleration can be made at a power failure and acceleration can be made again after power restoration.

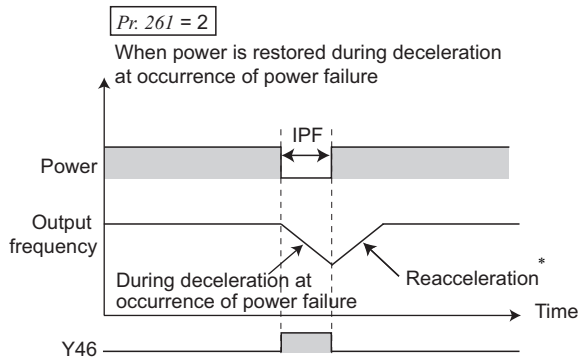

* Acceleration time depends on *Pr. 7 (Pr. 44)*.

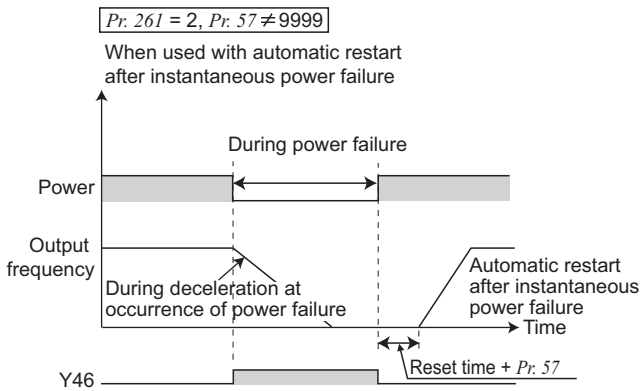

NOTE

- **When operation continuation at instantaneous power failure function is used, keep the starting signal (STF/STR) on even during instantaneous power failure. If the starting signal turns OFF during instantaneous power failure, the inverter decelerates according to the deceleration time setting, causing the motor to coast if enough regenerative energy is not obtained.**

(5) Power failure deceleration signal (Y46 signal)

- The Y46 signal is ON during deceleration at an instantaneous power failure or during a stop after deceleration at an instantaneous power failure.
- After a power failure stop, the inverter can not start even if power is restored and the start command is given. In this case, check the power failure deceleration signal (Y46 signal). (at occurrence of input phase loss (E.ILF), etc.)
- For the Y46 signal, set "46 (forward operation)" or "146 (reverse operation)" to *Pr. 190 or Pr. 192 (output terminal function selection)* to assign the function.

上正科技有限公司
電話： 037-466333
Email: service@repairtw.com
Line id: @zzzz
www.repairtw.com

REMARKS

- During a stop or trip, the power failure stop selection is not performed.

NOTE

- **Changing the terminal assignment using *Pr. 190, Pr. 192 (output terminal function selection)* may affect the other functions. Please make setting after confirming the function of each terminal.**

⚠ CAUTION

⚠ Even if the power failure stop function is valid, some loads may cause the inverter to trip and the motor to coast.
The motor will coast if enough regenerative energy is not given from the motor to the inverter.

Parameters referred to

Pr. 57 Restart coasting time ☞ *Refer to page 136*
Pr. 190, Pr. 192 (output terminal function selection) ☞ *Refer to page 119*

4.13 Operation setting at fault occurrence

Purpose	Parameter that should be Set		Refer to Page
Recover by retry operation at fault occurrence	Retry operation	Pr. 65, Pr. 67 to Pr. 69	144
Do not output input/output phase failure alarm	Input/output phase failure protection selection	Pr. 251, Pr. 872	146

4.13.1 Retry function (Pr. 65, Pr. 67 to Pr. 69)

If a fault occurs, the inverter resets itself automatically to restart. You can also select the fault for a retry.
When you have selected automatic restart after instantaneous power failure (*Pr. 57 Restart coasting time* ≠ 9999), restart operation is performed at the retry operation time which is the same of that of a power failure. (Refer to *page 136* for the restart function.)

Parameter Number	Name	Initial Value	Setting Range	Description
65	Retry selection	0	0 to 5	A fault for retry can be selected. *(Refer to the next page)*
67	Number of retries at fault occurrence	0	0	No retry function
			1 to 10	Set the number of retries at fault occurrence. A fault output is not provided during retry operation.
			101 to 110	Set the number of retries at fault occurrence. (The setting value of minus 100 is the number of retries.) A fault output is provided during retry operation.
68	Retry waiting time	1s	0.1 to 600s	Set the waiting time from when an inverter fault occurs until a retry is made.
69	Retry count display erase	0	0	Clear the number of restarts succeeded by retry.

The above parameters can be set when *Pr. 160 Extended function display selection* = "0". *(Refer to page 162)*

上正科技有限公司
電話： 037-461
Email: service@repairtw.com
Line id: @zzz
www.repairtw.com

Retry success example

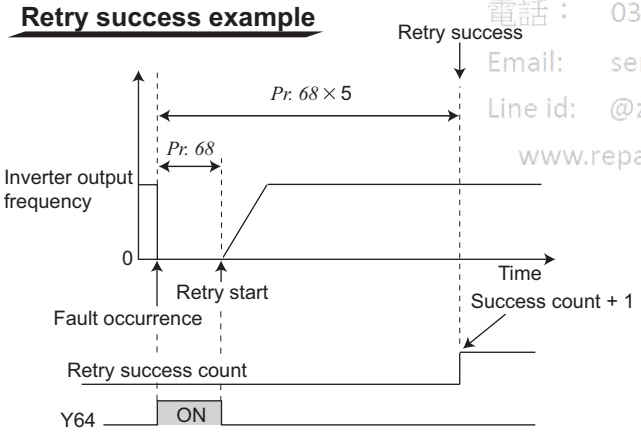

Retry failure example

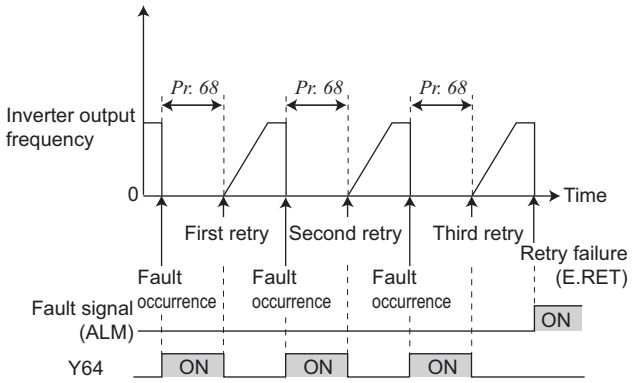

- Retry operation automatically resets a fault and restarts the inverter at the starting frequency when the time set in *Pr. 68* elapses after the inverter is tripped.
- Retry operation is performed by setting *Pr.67* to any value other than "0". Set the number of retries at fault occurrence in *Pr. 67*.
- When retries fail consecutively equal to or more than the number of times set in *Pr. 67*, a retry count excess fault (E.RET) occurs, resulting in inverter trip. (Refer to retry failure example)
- Use *Pr. 68* to set the waiting time from when the inverter trips until a retry is made in the range of 0 to 600s. (When the setting value is "0s", the actual time is 0.1s.)
- Reading the *Pr. 69* value provides the cumulative number of successful restart times made by retry.
  The cumulative count in *Pr. 69* is increased by 1 when a retry is regarded as successful after normal operation continues without faults occurring for more than four times longer than the time set in *Pr.68* after a retry start.
  (When retry is successful, cumulative number of retry failure is cleared.)
- Writing "0" to *Pr. 69* clears the cumulative count.
- During a retry, the Y64 signal is on. For the Y64 signal, assign the function by setting "64 (positive operation)" or "164 (negative operation)" to *Pr. 190 or Pr. 192 (output terminal fnction selection)* .

- Using *Pr. 65*, you can select the fault that will cause a retry to be executed. No retry will be made for the fault not indicated. (Refer to *page 250* for the fault description.)
  ● indicates the faults selected for retry.

Fault for Retry	*Pr. 65* Setting					
	0	1	2	3	4	5
E.OC1	●	●		●	●	●
E.OC2	●	●		●	●	
E.OC3	●	●		●	●	●
E.OV1	●		●	●	●	
E.OV2	●		●	●	●	
E.OV3	●		●	●	●	
E.THM	●					
E.THT	●					
E. BE	●				●	
E. GF	●				●	
E.OHT	●					

Fault for Retry	*Pr. 65* Setting					
	0	1	2	3	4	5
E.PTC	●					
E.OLT	●				●	
E. PE	●				●	
E.ILF	●				●	
E.CDO	●				●	

NOTE

- **When terminal assignment is changed using *Pr.190, Pr.192*, the other functions may be affected. Make setting after confirming the function of each terminal.**
- **The data stored as the error reset for retry is only that of the fault which occurred the first time.**
- **When an inverter fault is reset by the retry function at the retry time, the accumulated data of the electronic thermal relay function, regeneration brake duty etc. are not cleared. (Different from the power-on reset.)**
- **Retry is not performed if E.PE (Parameter storage device fault) occurred at power on.**

上正科技有限公司
購買、維修、出售四電組件
電話: 037-466333
Email: service@repairtw.com
www.repairtw.com

⚠ CAUTION

⚠ When you have selected the retry function, stay away from the motor and machine in the case of the inverter is tripped. They will start suddenly (after the reset time has elapsed) after the inverter trip.
When you have selected the retry function, apply in easily visible places the CAUTION stickers supplied to the Installation guideline.

Parameters referred to

Pr. 57 Restart coasting time ☞ *(Refer to page 136)*

4.13.2 Input/output phase loss protection selection (Pr. 251, Pr. 872)

You can choose whether to make Input/output phase loss protection valid or invalid.

- Output phase loss protection is a function to stop the inverter output if one of the three phases (U, V, W) on the inverter's output side (load side) is lost.
- Input phase loss protection is a function to stop the inverter output if one of the three phases (R/L1, S/L2, T/L3) on the inverter's input side (load side) is lost.

Parameter Number	Name	Initial Value	Setting Range	Description
251	Output phase loss protection selection	1	0	Without output phase loss protection
			1	With output phase loss protection
872 ∗	Input phase loss protection selection	0	0	Without input phase loss protection
			1	With input phase loss protection

The above parameters can be set when *Pr. 160 Extended function display selection* = "0". *(Refer to page 162)*

∗ Available only for the three-phase power input specification model.

(1) Output phase loss protection selection *(Pr. 251)*

- When *Pr. 251* is set to "0", output phase loss protection (E.LF) becomes invalid.

(2) Input phase loss protection selection *(Pr. 872)*

- When *Pr. 872* is set to "1", input phase loss protection (E.ILF) becomes valid.

NOTE

- **If an input phase loss continues for a long time, the converter section and capacitor lives of the inverter will be shorter.**
- **As phase loss is detected according to the bus voltage change, it can not be detected if the load is light. Large unbalanced phase-to-phase voltage of the three-phase power supply may also cause input phase loss protection (E.ILF).**
- **Phase loss can not be detected during regeneration load operation.**
- **If parameter copy is performed from single-phase power input specification model to three-phase power input specification model, *Pr. 872* setting may be changed. Check *Pr. 872* setting after parameter copy.**

上正科技有限公司
購買、維修、出售四零組件
電話： 037-466333
Email: service@repairtw.com
Line Id: @2222
www.repairtw.com

4.13.3 Earth (ground) fault detection at start (Pr. 249)

You can choose whether to make earth (ground) fault detection at start valid or invalid. Earth (Ground) fault detection is executed only right after the start signal is input to the inverter.
Protective function will not activate if an earth (ground) fault occurs during operation.

Parameter Number	Name	Initial Value	Setting Range	Description
249	Earth (ground) fault detection at start	0	0	Without earth (ground) fault detection
			1	With earth (ground) fault detection

The above parameter can be set when *Pr. 160 Extended function display selection* = "0". *(Refer to page 162)*

NOTE

- As detection is executed at starting, output is delayed for approx. 20ms every starting.
- If an earth (ground) fault is detected with "1" set in *Pr. 249*, output side earth (ground) fault overcurrent (E.GF) is detected and the inverter trips. (*Refer to page 256)*
- If the motor capacity is smaller than the inverter capacity when using the FR-D720-238 or more, FR-D740-120 or more, earth (ground) fault detection may not be provided.

4.14 Energy saving operation

Purpose	Parameter that should be Set		Refer to Page
Energy saving operation	Optimum excitation control	Pr. 60	147

4.14.1 Optimum excitation control (Pr. 60) V/F

Without a fine parameter setting, the inverter automatically performs energy saving operation.
This setting is optimum for fan and pump applications

Parameter Number	Name	Initial Value	Setting Range	Description
60	Energy saving control selection *	0	0	Normal operation mode
			9	Optimum excitation control mode

The above parameter can be set when *Pr. 160 Extended function display selection* = "0". *(Refer to page 162)*

* When parameter is read using the FR-PU04, a parameter name different from an actual parameter is displayed.

(1) Optimum excitation control mode (setting "9")

- When "9" is set in *Pr. 60*, the inverter operates in the Optimum excitation control mode.
- The Optimum excitation control mode is a control system which controls excitation current to improve the motor efficiency to maximum and determines output voltage as an energy saving method.

REMARKS

- When the motor capacity is too small as compared to the inverter capacity or two or more motors are connected to one inverter, the energy saving effect is not expected.

上正科技有限公司
購買、維修 此手冊零組件
電話： 037-466333
Line id: @zzzz
www.mairtw.com

NOTE

- **When the Optimum excitation control mode is selected, deceleration time may be longer than the setting value. Since overvoltage alarm tends to occur as compared to the constant-torque load characteristics, set a longer deceleration time.**
- **Optimum excitation control functions only under V/F control. Optimum excitation control does not function under General-purpose magnetic flux vector control.**
- **Optimum excitation control will not be performed during an automatic restart after instantaneous power failure.**
- **Since output voltage is controlled by Optimum excitation control, output current may slightly increase.**

Parameters referred to

General-purpose magnetic flux vector control ☞ *Refer to page 75*
Pr. 57 Restart coasting time ☞ *Refer to page 136*

4.15 Motor noise, EMI measures, mechanical resonance

Purpose of Use	Parameter that should be Set		Refer to Page
Reduction of the motor noise Measures against EMI and leakage currents	Carrier frequency and Soft-PWM selection	Pr. 72, Pr. 240, Pr. 260	148
Reduce mechanical resonance	Speed smoothing control	Pr. 653	149

4.15.1 PWM carrier frequency and Soft-PWM control (Pr. 72, Pr. 240, Pr. 260)

You can change the motor sound.

Parameter Number	Name	Initial Value	Setting Range	Description
72 *	PWM frequency selection	1	0 to 15	You can change the PWM carrier frequency. The setting is in [kHz]. Note that 0 indicates 0.7kHz and 15 indicates 14.5kHz.
240 *	Soft-PWM operation selection	1	0	Soft-PWM is invalid
			1	When *Pr. 72* = "0 to 5", Soft-PWM is valid.
260	PWM frequency automatic switchover	0	0	PWM carrier frequency is constant independently of load.
			1	Decreases PWM carrier frequency automatically when load increases.

The above parameters can be set when *Pr.160 Extended function display selection* = "0". *(Refer to page 162)*

* The parameters in the table allow its setting to be changed during operation even if "0" (initial value) is set in *Pr. 77 Parameter write selection*.

正修科技有限公司
購買、維修 此手冊零組件
電話: 037-466333
Email: service@repairtw.com
Line Id: @zzzz
www.repairtw.com

(1) PWM carrier frequency changing *(Pr. 72)*

- You can change the PWM carrier frequency of the inverter.
- Changing the PWM carrier frequency produces an effect on avoiding the resonance frequency of a mechanical system or motor or on EMI measures or on leakage current reduction caused by the PWM switching.

(2) Soft-PWM control *(Pr. 240)*

- Soft-PWM control is a control method that changes the motor noise from a metallic tone into an unoffending complex tone.

(3) PWM carrier frequency automatic reduction function *(Pr. 260)*

- When *Pr. 260* = "0" (initial value), the carrier frequency becomes constant (*Pr. 72* setting) independently of the load, making the motor sound uniform.
- When continuous operation is performed at 85% or more of the inverter rated current with the carrier frequency of the inverter set to 3kHz or more (*Pr.72* ≥ "3") while *Pr.260* = "1", the carrier frequency is automatically reduced to 2kHz to avoid E.THT (inverter overload shutoff). (Motor noise increases, but it is not a failure.)

NOTE

- **Decreasing the PWM carrier frequency affects on EMI measures and on leakage current reduction, but increases motor noise.**
- **When PWM carrier frequency is set to 1kHz or less (*Pr.72* ≤ 1), fast response current limit may function prior to stall prevention operation due to increase in ripple currents, resulting in insufficient torque. In such case, set fast-response current limit operation invalid using *Pr. 156 Stall prevention operation selection* .**

Parameters referred to

Pr. 156 Stall prevention operation selection ☞ *Refer to page 79*

4.15.2 Speed smoothing control (Pr. 653)

Vibration due to mechanical resonance influences the inverter control, causing the output current (torque) unstable. In this case, the output current (torque) fluctuation can be reduced to ease vibration by changing the output frequency.

Parameter Number	Name	Initial Value	Setting Range	Description
653	**Speed smoothing control**	0	0 to 200%	Increase or decrease the value using 100% as reference to check an effect.

The above parameter can be set when *Pr.160 Extended function display selection* = "0". *(Refer to page 162)*

(1) Control block diagram

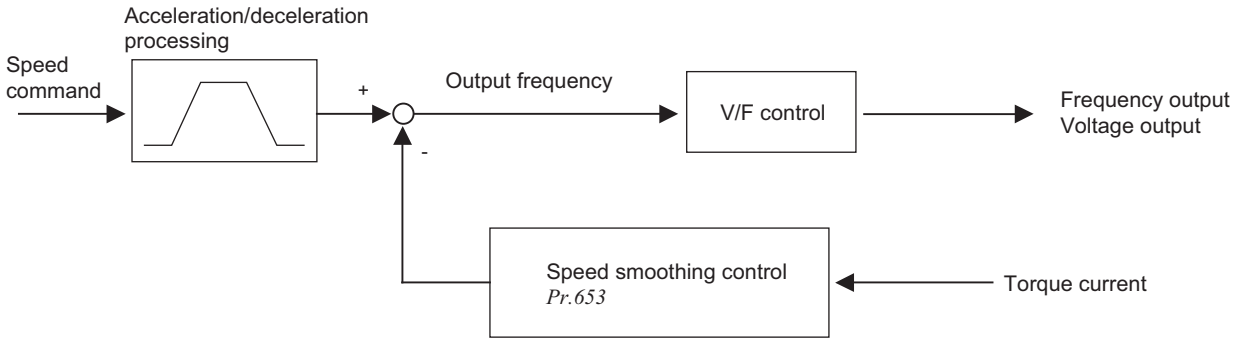

(2) Setting method

If vibration due to mechanical resonance occurs, set 100% in *Pr. 653*, run the inverter at the frequency which generates maximum vibration and check if the vibration will be reduced or not after several seconds.

If effect is not produced, gradually increase the *Pr. 653* setting and check the effect repeatedly until the most effective value is set in *Pr. 653*.

If vibration becomes large by increasing the *Pr. 653* setting, gradually decrease the *Pr. 653* setting than 100% to check the effect in a similar manner.

上正科技有限公司
購買、維修 此手冊零組件
電話： 037-466333
Email: service@repairtw.com
Line id: @zzzz
www.repairtw.com

NOTE

Depending on the machine, vibration may not be reduced enough or an effect may not be produced.

4.16 Frequency setting by analog input (terminal 2, 4)

Purpose	Parameter that should be Set		Refer to Page
Selection of voltage/current input (terminal 2, 4) **Perform forward/reverse rotation by analog input.**	**Analog input selection**	**Pr. 73, Pr. 267**	*150*
Adjustment (calibration) of analog input frequency and voltage (current)	**Bias and gain of frequency setting voltage (current)**	**Pr. 125, Pr. 126, Pr. 241, C2 to C7 (Pr. 902 to Pr. 905)**	*153*

4.16.1 Analog input selection (Pr. 73, Pr. 267)

You can select the function that switches between forward rotation and reverse rotation according to the analog input terminal specifications and input signal.

Parameter Number	Name	Initial Value	Setting Range	Description	
73	**Analog input selection**	1	0	Terminal 2 input 0 to 10V	Without reversible operation
			1	Terminal 2 input 0 to 5V	
			10	Terminal 2 input 0 to 10V	With reversible operation
			11	Terminal 2 input 0 to 5V	
267	**Terminal 4 input selection**	0		**Voltage/current input switch**	**Description**
			0	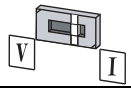	Terminal 4 input 4 to 20mA
			1	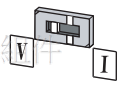	Terminal 4 input 0 to 5V
			2		Terminal 4 input 0 to 10V

The above parameters can be set when *Pr. 160 Extended function display selection* = "0". *(Refer to page 162)*

上正科技有限公司
購買、維修 此手冊零組件
電話： 037-466333
Email: service@repairtw.com
Line Id: @zzzz
www.repairtw.com

(1) Selection of analog input specifications

- For the terminal 2 for analog voltage input, 0 to 5V (initial value) or 0 to 10V can be selected.
- Either voltage input (0 to 5V, 0 to 10V) or current input (4 to 20mA initial value) can be selected for terminal 4 used for analog input.
  Change the input specifications to change *Pr. 267* and voltage/current input switch.
- Rated specifications of terminal 4 change according to the voltage/current input switch setting.
  Voltage input: Input resistance 10kΩ ± 1kΩ,
  Maximum permissible input voltage 20VDC
  Current input: Input resistance 233Ω ± 5Ω,
  Maximum permissible input voltage 30mA

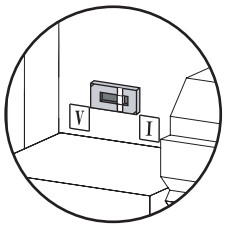

Current input (initial setting)

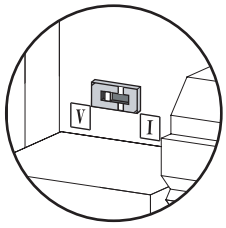

Voltage input

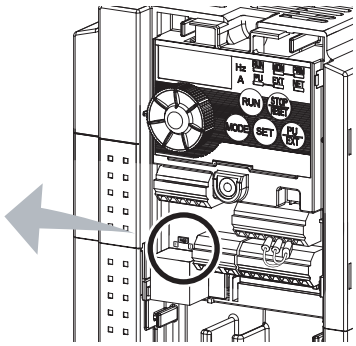

NOTE

- **Set *Pr. 267* and a voltage/current input switch correctly, then input an analog signal in accordance with the setting. Incorrect setting as in the table below could cause component damage. Incorrect settings other than below can cause abnormal operation.**

Setting Causing Component Damage		Operation
Switch setting	Terminal input	
I (current input)	Voltage input	This could cause component damage to the analog signal output circuit of signal output devices. (electrical load in the analog signal output circuit of signal output devices increases)
V (voltage input)	Current input	This could cause component damage of the inverter signal input circuit. (output power in the analog signal output circuit of signal output devices increases)

•Refer to the following table and set *Pr. 73* and *Pr. 267*.

(indicates main speed setting)

Pr.73 Setting	Terminal 2 Input	Terminal 4 Input		Reversible Operation
		AU signal		
0	0 to 10V	OFF	—	Not function
1 (initial value)	0 to 5V			
10	0 to 10V			Yes
11	0 to 5V			
0	—	ON	According to the *Pr. 267* setting 0:4 to 20mA (initial value) 1:0 to 5V 2:0 to 10V	Not function
1 (initial value)				
10	—			Yes
11				

- : invalid

•The terminal used for the AU signal input, set "4" in *Pr. 178 to Pr. 182 (input terminal function selection)* to assign functions.

上正科技有限公司
購買、維修 此手冊零組件
電話: 886-4-23222
Email: service@repairtw.com
Line ID: @322zz
www.repairtw.com

NOTE

- **Turn the AU signal on to make terminal 4 valid.**
- **Make sure that the parameter and switch settings are the same. Different setting may cause a fault, failure or malfunction.**
- **Use *Pr. 125 (Pr. 126) (frequency setting gain)* to change the maximum output frequency at input of the maximum output frequency command voltage (current). At this time, the command voltage (current) need not be input.**
  Also, the acceleration/deceleration time, which is a slope up/down to the acceleration/deceleration reference frequency, is not affected by the change in *Pr. 73* setting.
- **When *Pr. 561 PTC thermistor protection level* ≠"9999", terminal 2 is not available for analog frequency command.**
- **Changing the terminal assignment using *Pr. 178 to Pr. 182 (input terminal function selection)* may affect the other functions. Make setting after confirming the function of each terminal.**

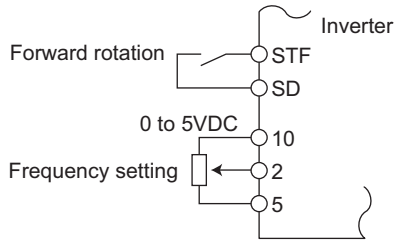

Connection diagram using terminal 2 (0 to 5VDC)

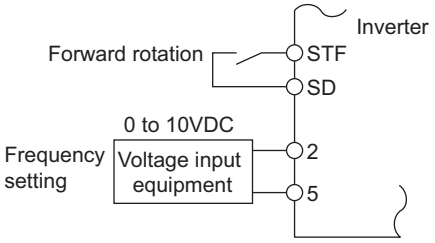

Connection diagram using terminal 2 (0 to 10VDC)

(2) Perform operation by analog input selection

•The frequency setting signal inputs 0 to 5VDC (or 0 to 10VDC) across the terminals 2-5. The 5V (10V) input is the maximum output.

•The power supply 5V can be input by either using the internal power supply or preparing an external power supply. Prepare an external power supply to input the power supply 10V. For the built-in power supply, terminals 10-5 provide 5VDC output.

Terminal	Inverter Built-in Power Supply Voltage	Frequency Setting Resolution	*Pr.73* (terminal 2 input power)
10	5VDC	0.12Hz/60Hz	0 to 5VDC input

•When inputting 10VDC to the terminal 2, set "0" or "10" in *Pr. 73*. (The initial value is 0 to 5V)

•Setting "1 (0 to 5VDC)" or "2 (0 to 10VDC)" in *Pr. 267* and a voltage/current input switch in the "V" position changes the terminal 4 to the voltage input specification. When the AU signal turns ON, the terminal 4 input becomes valid.

REMARKS

The wiring length of the terminal 10, 2, 5 should be 30m (98.42feet) at maximum.

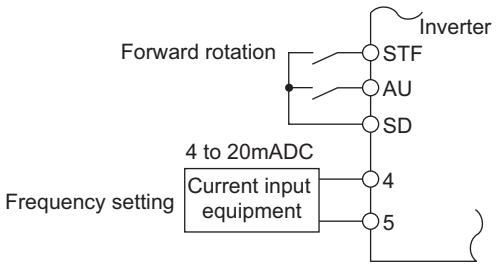

Connection diagram using terminal 4 (4 to 20mADC)

(3) Perform operation by analog input selection

- When the pressure or temperature is controlled constantly by a fan, pump, etc., automatic operation can be performed by inputting the output signal 4 to 20mADC of the adjuster across the terminals 4-5.
- The AU signal must be turned ON to use the terminal 4.

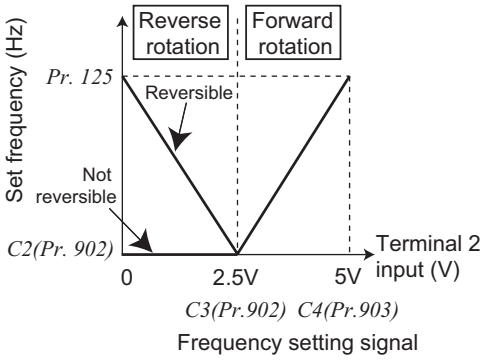

Reversible operation example

(4) Perform forward/reverse rotation by analog input (polarity reversible operation)

- Setting "10" or "11" in *Pr. 73* and adjusting *Pr. 125* (*Pr. 126*) *Terminal 2 frequency setting gain frequency* (*Terminal 4 frequency setting gain frequency*) and *C2 (Pr. 902) Terminal 2 frequency setting bias frequency* to *C7 (Pr.905) Terminal 4 frequency setting gain* makes reverse operation by terminal 2 (terminal 4) valid.

Example)When performing reversible operation by terminal 2 (0 to 5V) input

1) Set "11" in *Pr. 73* to make reversible operation valid.
   Set frequency at maximum analog input in *Pr. 125 (Pr. 903)*
2) Set 1/2 of the value set in *C4 (Pr. 903)* in *C3 (Pr. 902)*.
3) Reversible operation is performed when 0 to 2.5VDC is input and forward rotation when 2.5 to 5VDC.

上正科技有限公司
購買、維修 此手冊零組件
電話： 037-466333
Email: service@repairtw.com
Line Id: @2222
www.repairtw.com

NOTE

- **When reversible operation is set, be aware of reverse rotation operation when analog input stops (only the start signal is input).**
- **When reversible operation is valid, reversible operation (0 to 4mA: reverse operation, 4mA to 20mA: forward operation) is performed by terminal 4 in the initial setting.**

Parameters referred to

Pr. 125 Terminal 2 frequency setting gain frequency, Pr. 126 Terminal 4 frequency setting gain frequency ☞ *Refer to page 153*
Pr. 561 PTC thermistor protection level ☞ *Refer to page 100*
C2 (Pr. 902) Terminal 2 frequency setting bias frequency to C7 (Pr. 905) Terminal 4 frequency setting gain ☞ *Refer to page 153*

4.16.2 Response level of analog input and noise elimination (Pr. 74)

The time constant of the primary delay filter can be set for the external frequency command (analog input (terminal 2, 4) signal).

Parameter Number	Name	Initial Value	Setting Range	Description
74	Input filter time constant	1	0 to 8	Primary delay filter time constant for the analog input. A larger setting results in a larger filter.

The above parameter can be set when *Pr. 160 Extended function display selection* = "0". *(Refer to page 162)*

- Valid for eliminating noise of the frequency setting circuit.
- Increase the filter time constant if steady operation cannot be performed due to noise.
  A larger setting results in slower response. (The time constant can be set between approximately 1ms to 1s with the setting of 0 to 8.)

4.16.3 Bias and gain of frequency setting voltage (current) (Pr. 125, Pr. 126, Pr. 241, C2 (Pr. 902) to C7 (Pr. 905))

You can set the magnitude (slope) of the output frequency as desired in relation to the frequency setting signal (0 to 5VDC, 0 to 10VDC or 4 to 20mADC).
Set *Pr. 267* and voltage/current input switch to switch among 0 to 5VDC, 0 to 10VDC, and 0 to 20mADC input using terminal 4. *(Refer to page 150)*

[Frequency setting bias/gain parameter]

Parameter Number	Name	Initial Value	Setting Range	Description	
125	**Terminal 2 frequency setting gain frequency**	60Hz	0 to 400Hz	Frequency of terminal 2 input gain (maximum).	
126	**Terminal 4 frequency setting gain frequency**	60Hz	0 to 400Hz	Frequency of terminal 4 input gain (maximum).	
241 *1, *3	**Analog input display unit switchover**	0	0	Displayed in %	Unit for analog input display.
			1	Displayed in V/mA	
C2 (902) *1, *2	**Terminal 2 frequency setting bias frequency**	0Hz	0 to 400Hz	Frequency on the bias side of terminal 2 input.	
C3 (902) *1, *2	**Terminal 2 frequency setting bias**	0%	0 to 300%	Converted % of the bias side voltage (current) of terminal 2 input.	
C4 (903) *1, *2	**Terminal 2 frequency setting gain**	100%	0 to 300%	Converted % of the gain side voltage (current) of terminal 2 input.	
C5 (904) *1, *2	**Terminal 4 frequency setting bias frequency**	0Hz	0 to 400Hz	Frequency on the bias side of terminal 4 input.	
C6 (904) *1, *2	**Terminal 4 frequency setting bias**	20%	0 to 300%	Converted % of the bias side current (voltage) of terminal 4 input.	
C7 (905) *1, *2	**Terminal 4 frequency setting gain**	100%	0 to 300%	Converted % of the gain side current (voltage) of terminal 4 input.	

*1 The above parameters can be set when *Pr. 160 Extended function display selection* = "0". *(Refer to page 162)*
*2 The parameter number in parentheses is the one for use with the operation panel (PA02) for the FR-E500 series or parameter unit (FR-PU04/FR-PU07).
*3 The above parameters allow its setting to be changed during operation in any operation mode even if "0" (initial value) is set in *Pr. 77 Parameter write selection*.

上正科技有限公司
購買、維修、此手冊零組件
電話：037-466333
Email: service@repairtw.com
www.repairtw.com

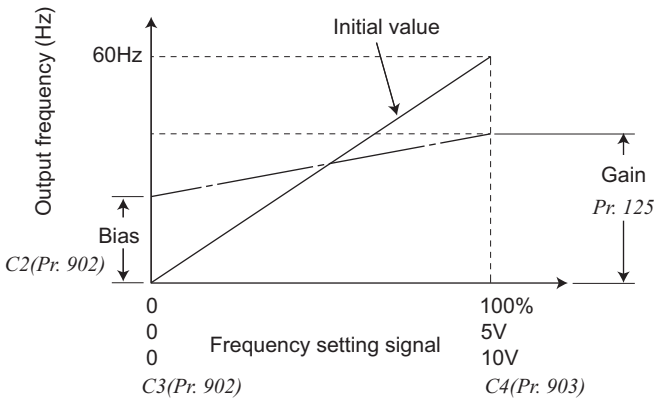

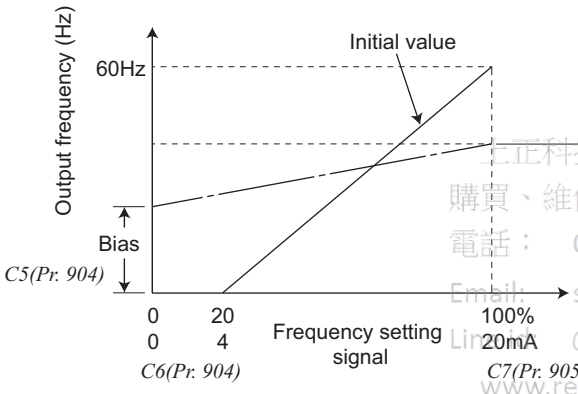

三正科技有限公司
購買、維修、此手冊零組件
電話： 03-4563333
Email: service@repairtw.com
Line: @zzzz
www.repairtw.com

(1) Change the frequency at maximum analog input *(Pr. 125, Pr. 126)*

- Set *Pr. 125 (Pr. 126)* when changing frequency setting (gain) of the maximum analog input voltage (current) only. (*C2 (Pr. 902)* to *C7 (Pr.905)* setting need not be changed)

(2) Analog input bias/gain calibration *(C2 (Pr. 902) to C7 (Pr. 905))*

- The "bias" and "gain" functions are used to adjust the relationship between the input signal entered from outside the inverter to set the output frequency, e.g. 0 to 5VDC, 0 to 10VDC or 4 to 20mADC, and the output frequency.
- Set the bias frequency of the terminal 2 input using *C2 (Pr. 902)*.
  (It is initially set to the frequency at 0V)
- Set the output frequency in *Pr. 125* for the frequency command voltage set with *Pr. 73 Analog input selection*.
- Set the bias frequency of the terminal 4 input using *C5 (Pr. 904)*.
  (It is initially set to the frequency at 4mA)
- Using *Pr. 126*, set the output frequency relative to 20mA of the frequency command current (4 to 20mA).
- There are three methods to adjust the frequency setting voltage (current) bias/gain.
  a) Method to adjust any point by application of a voltage (current) across terminals 2-5 (4-5) ☞ *page 155*
  b) Method to adjust any point without application of a voltage (current) across terminals 2-5 (4-5) ☞ *page 156*
  c) Method to adjust frequency only without adjustment of voltage (current) ☞ *page 157*

NOTE

- **When voltage/current input signal for terminal 4 was switched using *Pr. 267* and voltage/current input switch, perform calibration without fail.**

(3) Analog input display unit changing *(Pr. 241)*

- You can change the analog input display unit (%/V/mA) for analog input bias/gain calibration.
- Depending on the terminal input specification set to *Pr. 73*, *Pr. 267*, and voltage/current switch, the display units of *C3 (Pr. 902), C4 (Pr. 903), C6 (Pr. 904), C7 (Pr. 905)* change as shown below.

Analog Command (terminal 2, 4) (depending on *Pr. 73*, *Pr. 267*, and voltage/current input switch)	*Pr. 241* = 0 (initial value)	*Pr. 241* = 1
0 to 5V input	0 to 5V → 0 to 100% (0.1%) display	0 to 100% → 0 to 5V (0.01V) display
0 to 10V input	0 to 10V → 0 to 100% (0.1%) display	0 to 100% → 0 to 10V (0.01V) display
0 to 20mA input	0 to 20mA → 0 to 100%(0.1%) display	0 to 100% → 0 to 20mA (0.01mA) display

(4) Frequency setting signal (current) bias/gain adjustment method

(a) Method to adjust any point by application of a voltage (current) across terminals 2-5 (4-5).

Operation	Display
1. Confirm the RUN indication and operation mode indication ● The inverter should be at a stop. ● The inverter should be in the PU operation mode. (Using PU/EXT)	0.00 Hz MON PU
2. Press MODE to choose the parameter setting mode.	MODE ⇨ P. 0 PRM PRM indication is lit. (The parameter number read previously appears.)
3. Turn ◎ until C. . . appears.	◎ ⇨ C. . .
4. Turn SET until C - - - appears.	SET ⇨ C - - - (C1 to C7 settings are enabled.)
5. Turn ◎ until C 4 (C 7) appears. Set to *C4 Terminal 2 frequency setting gain.*	◎ ⇨ C 4 (Terminal 2 input is selected) C 7 (Terminal 4 input is selected)
6. Press SET to display the analog voltage (current) value (%).	SET ⇨ 0.0 Analog voltage (current) value (%) across terminals 2-5 (across terminals 4-5)
7. Apply a 5V (20mA) voltage (current). (Turn the external potentiometer connected across terminals 2-5 (across terminals 4-5) to maximum (any position).)	◎ ⇨ 100 * * The value is nearly 100 (%) in the maximum position of the potentiometer.

上正科技有限公司
購買、維修 此手冊零組件
電話: 037-466333
Email: service@repairtw.com
Line id: @zzzz
www.repairtw.com

NOTE

After performing operation in step 6, do not touch ◎ until completion of calibration.

8. Press SET to set.	SET ⇨ 60.00 Hz * (Terminal 2 input is selected: C 4; Terminal 4 input is selected: C 7) **Flicker...Parameter setting complete!!** * The value is nearly 100 (%) in the maximum position of the potentiometer.

- Turn ◎ to read another parameter.
- Press SET to return to the C - - - indication (step 4).
- Press SET twice to show the next parameter (Pr.CL).

REMARKS

- If the frequency meter (display meter) connected across the terminals AM-5 does not indicate exactly 60Hz, set the *calibration parameter C1 AM terminal calibration. (Refer to page 134)*
- If the gain and bias of frequency setting voltage (current) are too close, an error (Er3) may be displayed at setting.

(b) Method to adjust any point without application of a voltage (current) across terminals 2-5 (4-5)
(To change from 4V (80%) to 5V (100%))

Operation	Display
1. Confirm the RUN indication and operation mode indication ● The inverter should be at a stop. ● The inverter should be in the PU operation mode. (Use PU/EXT)	0.00 Hz MON PU
2. Press MODE to choose the parameter setting mode.	MODE ⇨ P. 0 PRM PRM indication is lit. (The parameter number read previously appears.)
3. Turn ◎ until C. . . appears.	⇨ C. . .
4. Turn SET until C - - - appears.	SET ⇨ C - - - (C1 to C7 settings are enabled.)
5. Turn ◎ until C 4 (C 7) appears. Set to *C4 Terminal 2 frequency setting gain*.	⇨ C 4 (Terminal 2 input is selected) C 7 (Terminal 4 input is selected)
6. Press SET to display the analog voltage (current) value (%).	SET ⇨ 0.0 Analog voltage (current) value (%) across terminals 2-5 (across terminals 4-5)
7. Turn ◎ to set gain voltage (%). "0V(0mA) is 0%, 10V(5V, 20mA) is 100%"	⇨ 100 The gain frequency is reached when the analog voltage (current) value across terminals 2-5 (across terminals 4-5) is 100%.

上正科技有限公司
購買、維修、此手冊零組件
電話: 037-466339
Email: service@repairtw.com
Line id: @zzzz
www.repairtw.com

REMARKS

The current setting at the instant of turning ◎ is displayed.
You can not check after performing operation in step 7.

8. Press SET to set.

SET ⇨ 100 ↔ Flicker...Parameter setting complete!!
(Adjustment completed)

Terminal 2 input is selected: C 4
Terminal 4 input is selected: C 7

- •Turn ◎ to read another parameter.
- •Press SET to return to the C - - - indication (step 4).
- •Press SET twice to show the next parameter (Pr.CL).

REMARKS

By pressing ◎ after step 6, you can confirm the current frequency setting bias/gain setting.
You can not check after performing operation in step 7.

(c) Adjusting only the frequency without adjusting the gain voltage (current).
(When changing the gain frequency from 60Hz to 50Hz)

Operation	Display
1. Turn until P.125 *(Pr. 125)* or P.126 *(Pr. 126)* appears	P.125 Terminal 2 input is selected or P.126 Terminal 4 input is selected
2. Press SET to show the present set value. (60.00Hz)	60.00 Hz
3. Turn to change the set value to "50.00". (50.00Hz)	50.00 Hz
4. Press SET to set.	50.00 (Terminal 2 input is selected) ↔ P.125; 50.00 (Terminal 4 input is selected) ↔ P.126
	Flicker...Parameter setting complete!!
5. Mode/monitor check Press MODE twice to choose the monitor/frequency monitor.	0.00 Hz MON PU
6. Apply a voltage across the inverter terminals 2-5 (across 4-5) and turn on the start command (STF, STR). Operation starts at 50Hz.	

上正科技有限公司
購買、維修 此手冊零組件
電話： 037-466333
Email: service@repairtw.com
Line id: @ccsa
www.repairtw.com

REMARKS

- Changing *C4 (Pr. 903)* or *C7 (Pr. 905)* (gain adjustment) value will not change the *Pr. 20* value.
- For operation from the parameter unit (FR-PU04/FR-PU07), refer to the instruction manual of the FR-PU04/FR-PU07.
- When setting the value to 120Hz or more, it is necessary to set *Pr. 18 High speed maximum frequency* to 120Hz or more. *(Refer to page 83)*
- Make the bias frequency setting using the *calibration parameter C2 (Pr. 902) or C5 (Pr. 904)*. *(Refer to page 154)*

⚠ CAUTION

⚠ Be cautious when setting any value other than "0" as the bias frequency at 0V (0mA). Even if a speed command is not given, merely turning on the start signal will start the motor at the preset frequency.

Parameters referred to

Pr. 20 Acceleration/deceleration reference frequency ☞ *Refer to page 96*
Pr. 73 Analog input selection, Pr. 267 Terminal 4 input selection ☞ *Refer to page 150*
Pr. 79 Operation mode selection ☞ *Refer to page 165*
Bias and gain of built-in frequency setting potentiometer ☞ *Refer to page 244*

4.17 Misoperation prevention and parameter setting restriction

Purpose	Parameter that should be Set		Refer to Page
Limits reset function **Trips when PU is disconnected** **Stops from PU**	**Reset selection/disconnected PU detection/PU stop selection**	**Pr. 75**	*158*
Prevention of parameter rewrite	**Parameter write disable selection**	**Pr. 77**	*161*
Prevention of reverse rotation of the motor	**Reverse rotation prevention selection**	**Pr. 78**	*162*
Displays necessary parameters	**Display of applied parameters**	**Pr. 160**	*162*
Parameter restriction with using password	**Password function**	**Pr. 296, Pr. 297**	*163*
Control of parameter write by communication	**EEPROM write selection**	**Pr. 342**	*187*

4.17.1 Reset selection/disconnected PU detection/PU stop selection (Pr. 75)

You can select the reset input acceptance, disconnected PU (FR-PU04/FR-PU07) connector detection function and PU stop function.

Parameter Number	Name	Initial Value	Setting Range	Description
75	**Reset selection/ disconnected PU detection/ PU stop selection**	14	0 to 3, 14 to 17	For the initial value, reset always enabled, without disconnected PU detection, and with PU stop function.

•The above parameter can be set when *Pr. 160 Extended function display selection* = "0". *(Refer to page 162)*

•The *Pr. 75* value can be set any time. Also, if parameter (all) clear is executed, this setting will not return to the initial value.

Pr. 75 Setting	Reset Selection	Disconnected PU Detection	PU Stop Selection
0	Reset input normally enabled	When the PU is disconnected, operation is continued.	Pressing STOP/RESET decelerates the motor to a stop only in the PU operation mode.
1	Reset input is enabled only when the fault occurs.		
2	Reset input normally enabled	When the PU is disconnected, the inverter trips.	
3	Reset input is enabled only when the fault occurs.		
14 (initial value)	Reset input normally enabled	When the PU is disconnected, operation is continued.	Pressing STOP/RESET decelerates the motor to a stop in any of the PU, external and communication operation modes.
15	Reset input is enabled only when the fault occurs.		
16	Reset input normally enabled	When the PU is disconnected, the inverter trips.	
17	Reset input is enabled only when the fault occurs.		

上証科技有限公司
購買、維修 此手冊零組件
電話：037-466333
Email：service@repairtw.com
LINE ID：@7777
www.repairtw.com

(1) Reset selection

•You can select the enable condition of reset function (RES signal, reset command through communication) input.

•When *Pr. 75* is set to any of "1, 3, 15, 17", a reset can be input only when the inverter is tripped.

NOTE

- **When the reset signal (RES) is input during operation, the motor coasts since the inverter being reset shuts off the output.**
- **When reset is performed, cumulative values of electronic thermal O/L relay, and regenerative brake duty are cleared.**
- **The reset key of the PU is only valid when the inverter is tripped, independently of the *Pr. 75* setting.**

(2) Disconnected PU detection

•This function detects that the PU (FR-PU04/FR-PU07) has been disconnected from the inverter for longer than 1s and causes the inverter to provide a fault output (E.PUE) and come to trip.

•When *Pr. 75* is set to any of "0, 1, 14, 15", operation is continued even if the PU is disconnected.

REMARKS

- When the PU has been disconnected since before power-on, it is not judged as a fault.
- To make a restart, confirm that the PU is connected and then reset the inverter.
- The motor decelerates to a stop when the PU is disconnected during PU Jog operation with *Pr. 75* set to any of "0, 1, 14, 15" (which selects operation to be continued if the PU is disconnected).
- When RS-485 communication operation is performed through the PU connector, the reset selection/PU stop selection function is valid but the disconnected PU detection function is invalid.

(3) PU stop selection

- In any of the PU operation, external operation and network operation modes, the motor can be stopped by pressing STOP key of the operation panel or parameter unit (FR-PU04/FR-PU07, operation panel for FR-E500 (PA02)).
- When the inverter is stopped by the PU stop function, " PS " (PS) is displayed. A fault output is not provided.
- After the motor is stopped from the PU, it is necessary to perform PU stop (PS) reset to restart. PS reset can be made from the unit from which PU stop is made (operation panel, parameter unit (FR-PU04/PU07, operation panel for FR-E500 (PA02)).
- The motor can be restarted by making PS cancel using a power supply reset or RES signal.
- When *Pr. 75* is set to any of "0 to 3", PU stop (PS display) is invalid, and deceleration to a stop by STOP/RESET is valid only in the PU operation mode.

REMARKS

During operation in the PU operation mode through RS-485 communication from the PU connector, the motor decelerates to stop (PU stop) when entered from the operation panel STOP/RESET.

(4) How to restart the motor stopped by STOP/RESET input from the PU in external operation mode (PU stop (PS) reset method)

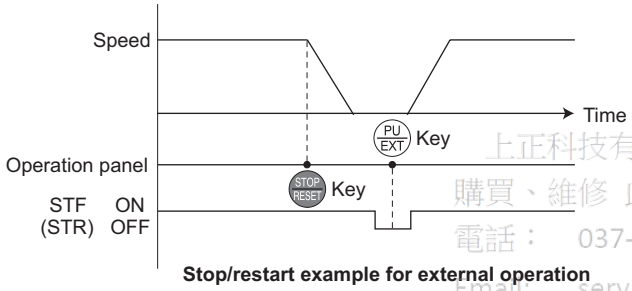

Stop/restart example for external operation

a) Operation panel

1)After completion of deceleration to a stop, switch off the STF or STR signal.

2)Press PU/EXT to display PU. ..... (PS reset)

3)Press PU/EXT to return to EXT.

4)Switch on the STF or STR signal.

b) Parameter unit (FR-PU04/FR-PU07)

1)After completion of deceleration to a stop, switch off the STF or STR signal.

2)Press EXT. ..... (PS reset)

3)Switch on the STF or STR signal.

- The motor can be restarted by making a reset using a power supply reset or RES signal.

REMARKS

- If *Pr. 250 Stop selection* is set to other than "9999" to select coasting to a stop, the motor will not be coasted to a stop but decelerated to a stop by the PU stop function during external operation.

上正科技有限公司
購買、維修 此系列零件
電話： 037-464833
Email: service@repairtw.com
Line id: @zzzz
www.repairtw.com

(5) Restart (PS reset) method when PU stop (PS display) is made during PU operation

•PU stop (PS display) is made when the motor is stopped from the unit where control command source is not selected (operation panel, parameter unit (FR-PU04/FR-PU07, operation panel for FR-E500 (PA02)) in the PU operation mode.
For example, when *Pr. 551 PU mode operation command source selection* = "9999" (initial value), the motor is stopped from the PU (PS display) if entered from the operation panel (STOP RESET) in PU operation mode with the parameter unit mounted.

When the motor is stopped from the PU while the parameter unit (FR-PU04/FR-PU07) is selected as control command source.

1) After the motor has decelerated to a stop, press (STOP RESET) of the parameter unit (FR-PU04/FR-PU07).

2) Press (PU EXT) to display EXT .(PS reset)

3) Press PU of the parameter unit (FR-PU04/FR-PU07) to select the PU operation mode.

4) Press FWD or REV of the parameter unit (FR-PU04/FR-PU07).

REMARKS

- When *Pr. 551* = "9999", the priorities of the PU control source is parameter unit (FR-PU04/FR-PU07) > operation panel.

⚠ CAUTION

⚠ **Do not reset the inverter while the start signal is being input.**
Otherwise, the motor will start instantly after resetting, leading to potentially hazardous conditions.

上正科技有限公司
購買、維修 此手冊零組件
電話： 037-466333
Email: service@repairtw.com
Line id: @zzzz
www.repairtw.com

Parameters referred to

Pr. 250 Stop selection ☞ *Refer to page 112*
Pr. 551 PU mode operation command source selection ☞ *Refer to page 176*

4.17.2 Parameter write disable selection (Pr. 77)

You can select whether write to various parameters can be performed or not. Use this function to prevent parameter values from being rewritten by misoperation.

Parameter Number	Name	Initial Value	Setting Range	Description
77	Parameter write selection	0	0	Write is enabled only during stop.
			1	Parameter can not be written.
			2	Parameter write is enabled in any operation mode regardless of operation status.

The above parameter can be set when *Pr. 160 Extended function display selection* = "0". *(Refer to page 162)*

Pr. 77 can be always set independently of the operation mode and operation status.

(1) Write parameters only during stop *(setting "0" initial value)*

- Parameters can be written only during a stop in the PU operation mode.
- The shaded parameters in the parameter list *(page 56)* can always be written regardless of the operation mode and operating status. However, *Pr. 72 PWM frequency selection* and *Pr. 240 Soft-PWM operation selection* can be written when the inverter is running in the PU operation mode, but cannot be written in the external operation mode.

(2) Inhibit parameter write *(setting "1")*

- Parameter write is not enabled. (Read is enabled.)
- Parameter clear and all parameter clear cannot be performed, either.
- The parameters given on the right can be written even if *Pr. 77* = "1".

Parameter Number	Name
22	Stall prevention operation level
75	Reset selection/disconnected PU detection/ PU stop selection
77	Parameter write selection
79	Operation mode selection
160	Extended function display selection
296	Password lock level
297	Password lock/unlock

上正科技有限公司
購買、維修 此手冊零組件
電話： 037-466333
Email: service@repairtw.com
Line id: @zzzz
www.repairtw.com

(3) Write parameters during operation *(setting "2")*

- Parameters can always be written.
- The following prameters cannot be written when the inverter is running even if *Pr. 77* = "2". Stop the inverter when changing their parameter settings.

Parameter Number	Name
23	Stall prevention operation level compensation factor at double speed
40	RUN key rotation direction selection
48	Second stall prevention operation current
60	Energy saving control selection
66	Stall prevention operation reduction starting frequency
71	Applied motor
79	Operation mode selection
80	Motor capacity
82	Motor excitation current
83	Rated motor voltage
84	Rated motor frequency
90	Motor constant (R1)

Parameter Number	Name
96	Auto tuning setting/status
178 to 182	(input terminal function selection)
190, 192	(output terminal function selection)
255	Life alarm status display
256	Inrush current limit circuit life display
257	Control circuit capacitor life display
258	Main circuit capacitor life display
261	Power failure stop selection
298	Frequency search gain
343	Communication error count
450	Second applied motor
561	PTC thermistor protection level
563	Energization time carrying-over times
564	Operating time carrying-over times

Parameters referred to

Pr. 79 Operation mode selection ☞ *Refer to page 165*

4.17.3 Reverse rotation prevention selection (Pr. 78)

This function can prevent reverse rotation fault resulting from the incorrect input of the start signal.

Parameter Number	Name	Initial Value	Setting Range	Description
78	Reverse rotation prevention selection	0	0	Both forward and reverse rotations allowed
			1	Reverse rotation disabled
			2	Forward rotation disabled

The above parameter can be set when *Pr. 160 Extended function display selection* = "0". *(Refer to page 162)*

- Set this parameter when you want to limit the motor rotation to only one direction.
- This parameter is valid for all of the reverse rotation and forward rotation keys of the enclosure surface operation panel and of parameter unit (FR-PU04/FR-PU07), the start signals (STF, STR signals) via external terminals, and the forward and reverse rotation commands through communication.

4.17.4 Extended parameter display (Pr. 160)

Parameter which can be read from the operation panel and parameter unit can be restricted.
In the initial setting, only the simple mode parameters are displayed.

Parameter Number	Name	Initial Value	Setting Range	Description
160	Extended function display selection	0	9999	Displays only the simple mode parameters
			0	Displays simple mode + extended parameters

(1) Display of simple mode parameters and extended parameters *(Pr. 160)*

•When *Pr. 160* = "9999", only the simple mode parameters can be displayed on the operation panel and parameter unit (FR-PU04/FR-PU07). (Refer to the parameter list, *page 56*, for the simple mode parameters.)
•When *Pr. 160* = "0"(initial value), simple mode parameters and extended parameters can be displayed.

上海菲利克科技有限公司
購買、維修、出手四零組件
電話： 037-490333
Email: service@repairtw.com
Line id: @zzzz
www.repairtw.com

REMARKS

- When RS-485 communication is used to read the parameters with *Pr. 551 PU mode operation command source selection* ≠ "2", all parameters can be read regardless of the *Pr. 160* setting.
- *Pr. 15 Jog frequency*, *Pr. 16 Jog acceleration/deceleration time*, and *Pr. 991 PU contrast adjustment* are displayed as simple mode parameter when the parameter unit (FR-PU04/FR-PU07) is fitted.

Parameters referred to

Pr. 15 Jog frequency ☞ *Refer to page 91*
Pr. 16 Jog acceleration/deceleration time ☞ *Refer to page 91*
Pr. 551 PU mode operation command source selection ☞ *Refer to page 176*
Pr. 991 PU contrast adjustment ☞ *Refer to page 241*

4.17.5 Password function (Pr. 296, Pr. 297)

Registering 4-digit password can restrict parameter reading/writing.

Parameter Number	Name	Initial Value	Setting Range	Description
296	Password lock level	9999	1 to 6, 101 to 106	Select restriction level of parameter reading/ writing when a password is registered.
			9999	No password lock
297	Password lock/unlock	9999	1000 to 9998	Register a 4-digit password
			(0 to 5)	Displays password unlock error count. (Reading only) (Valid when *Pr. 296* = "101" to "106")
			(9999)	No password lock (Reading only)

The above parameters can be set when *Pr. 160 Extended function display selection* = "0".
When *Pr. 296* ≠ "9999" (with password lock), note that *Pr. 297* is always available for setting regardless of *Pr. 160* setting.

(1) Parameter reading/writing restriction level (*Pr. 296*)

•Level of reading/writing restriction by PU/NET mode operation command can be selected by *Pr. 296*.

Pr. 296 Setting	PU Mode Operation Command *3		NET Mode Operation Command *4	
	Read *1	Write *2	Read *1	Write *2
9999	○	○	○	○
1, 101	○	×	○	×
2, 102	○	×	○	○
3, 103	○	○	○	×
4, 104	×	×	×	×
5, 105	×	×	○	○
6, 106	○	○	×	×

○: enabled, ×: restricted

上正科技有限公司
購買、維修 此手冊零組件
電話： 037-466333
Email: service@repairtw.com
Line id: @ccc
www.repairtw.com

*1 If the parameter reading is restricted by the *Pr. 160* setting, those parameters are unavailable for reading even when "○" is indicated.
*2 If the parameter writing is restricted by the *Pr. 77* setting, those parameters are unavailable for writing even when "○" is indicated.
*3 Parameter access from unit where parameter is written in PU operation mode (initially set to operation panel, parameter unit) is restricted. (*Refer to page 176* for PU mode operation command source selection)
*4 Parameter access in NET operation mode with RS-485 communication is restricted.

(2) Password lock/unlock (*Pr.296, Pr.297*)

<Lock>

1) Set parameter reading/writing restriction level.(*Pr. 296* ≠ 9999)
   Setting "1 to 6": Does not display password unlock error count when reading *Pr. 297* .
   Setting "101 to 106": Displays password unlock error count when reading *Pr. 297* .
   * When *Pr. 296* = "101 to 106", if password unlock error has occurred 5 times, correct password will not unlock the restriction. Parameter all clear can unlock the restriction.
   (In this case, parameter settings are cleared.)
2) Write four-digit numbers (1000 to 9998) in *Pr. 297* as a password.
   (When *Pr. 296* = "9999", *Pr. 297* can't be written.)
   When password is registered, parameter reading/writing is restricted with the restriction set level in *Pr. 296* until unlocking.

REMARKS

- After registering a password, a read value of *Pr. 297* is always "0" to "5".
- When a password restricted parameter is read/written, LOCd is displayed.
- Even if a password is registered, parameters which the inverter itself writes, such as inverter parts life, are overwritten occasionally.
- Even if a password is registered, *Pr. 991 PU contrast adjustment* can be read/written when a parameter unit (FR-PU04/FR-PU07) is connected.

<Unlock>

There are two ways of unlocking the password.

- Enter a password in *Pr. 297*.
  Unlocked when a password is correct. If a password is incorrect, an error occurs and not unlocked.
  During *Pr. 296* = "101 to 106", if password unlock error has occurred 5 times, correct password will not unlock the restriction.
  (During password lock)
- Perform parameter all clear.
  Password lock is unlocked. However, other parameter settings are cleared also.

上正科技有限公司
購買、維修 此手冊零組件
電話： 037-466333
Email: service@repairtw.com
Line ID: @ecs
www.repairtw.com

NOTE

- **If the password has been forgotten, perform parameter all clear to unlock the parameter restriction. In that case, other parameters are also cleared.**
- **Parameter all clear can not be performed during operation of voltage output.**
- **Do not use the FR Configurator under the conditions that parameter read is restricted (*Pr. 296* = "4, 5, 104, 105"). FR Configurator may not function properly.**

(3) Parameter operation during password lock/unlock

Parameter operation		Unlocked		Password registered	Locked
		Pr. 296 = 9999 *Pr. 297* = 9999	*Pr. 296* ≠ 9999 *Pr. 297* = 9999	*Pr. 296* ≠ 9999 *Pr. 297* = 0 to 4 (Read value)	*Pr. 296* = 101 to 106 *Pr. 297* = 5 (Read value)
Pr. 296	Read	○ *1	○	○	○
	Write	○ *1	○ *1	×	×
Pr. 297	Read	○ *1	○	○	○
	Write	×	○	○	○ *3
Performing parameter clear		○	○	×	×
Performing parameter all clear		○	○	○ *2	○ *2
Performing parameter copy		○	○	×	×

○: enabled, ×: restricted

*1 Reading/writing is unavailable when there is restriction to reading by the *Pr. 160* setting.
*2 Unavailable during operation of voltage output.
*3 Correct password will not unlock the restriction.

REMARKS

- When *Pr. 296* = "4, 5, 104, 105" and using the parameter unit (FR-PU04/FR-PU07), PUJOG operation is unavailable.
- When writing is restricted from PU mode operation command (*Pr. 296* = 1, 2, 4, 5, 101, 102, 104, 105), switching of operation mode by easy setting mode is unavailable.

Parameters referred to

Pr. 77 Parameter write selection ☞ *Refer to page 161*
Pr. 160 Extended function display selection ☞ *Refer to page 162*
Pr. 551 PU mode operation command source selection ☞ *Refer to page 176*

4.18 Selection of operation mode and operation location

Purpose	Parameter that should be Set		Refer to Page
Operation mode selection	**Operation mode selection**	**Pr. 79**	*165*
Started in network operation mode	**Operation mode at power-on**	**Pr. 79, Pr. 340**	*175*
Selection of operation location	**Operation command source and speed command source during communication operation, selection of operation location**	**Pr. 338, Pr. 339 Pr. 551**	*176*

4.18.1 Operation mode selection (Pr. 79)

Used to select the operation mode of the inverter.
Mode can be changed as desired among operation using external command signals (external operation), operation from the operation panel and PU (FR-PU07/FR-PU04) (PU operation), combined operation of PU operation and external operation (external/PU combined operation), and network operation (when RS-485 communication is used).

Parameter Number	Name	Initial Value	Setting Range	Description	LED Indication :Off :On
79	Operation mode selection	0	0	Use external/PU switchover mode (PU/EXT) to switch between the PU and external operation mode. At power on, the inverter is in the external operation mode.	External operation mode EXT PU operation mode PU
			1	Fixed to PU operation mode	PU
			2	Fixed to external operation mode Operation can be performed by switching between the external and Net operation mode.	External operation mode EXT NET operation mode NET
			3	External/PU combined operation mode 1 **Frequency command**: Operation panel and PU (FR-PU04/FR-PU07) setting or external signal input (multi-speed setting, across terminals 4-5 (valid when AU signal turns on)). ∗ **Start command**: External signal input (terminal STF, STR)	PU EXT
			4	External/PU combined operation mode 2 **Frequency command**: External signal input (terminal 2, 4, JOG, multi-speed selection, etc.) **Start command**: Enter from RUN of the operation panel and FWD and REV of the PU (FR-PU04/FR-PU07)	
			6	Switchover mode Switchover among PU operation, external operation, and NET operation is available while keeping the same operation status.	PU operation mode PU External operation mode EXT NET operation mode NET
			7	External operation mode (PU operation interlock) X12 signal ON Operation mode can be switched to the PU operation mode. (output stop during external operation) X12 signal OFF Operation mode can not be switched to the PU operation mode.	PU operation mode PU External operation mode EXT

The above parameter can be changed during a stop in any operation mode.

∗ The priorities of the frequency commands when *Pr. 79* = "3" are "Multi-speed operation (RL/RM/RH/REX) > PID control (X14) > terminal 4 analog input (AU) > digital input from the operation panel".

上正科技有限公司
購買、維修、出售四零組件
電話: 037-466333
Email: service@repairtw.com
Line ID: @037
www.repairtw.com

(1) Operation mode basics

- The operation mode specifies the souce of the start command and the frequency command for the inverter.
- Select the "external operation mode" when the start command and the frequency command are applied from a potentiometer, switches, etc. which are provided externally and connected to the control terminals. Select "PU operation mode" when the commands are applied using the operation panel or parameter unit (FR-PU04/FR-PU07). Select the "network operation mode (NET operation mode)" when the commands are applied from the RS-485 communication with the PU connector.

- The operation mode can be selected from the operation panel or with the communication instruction code.

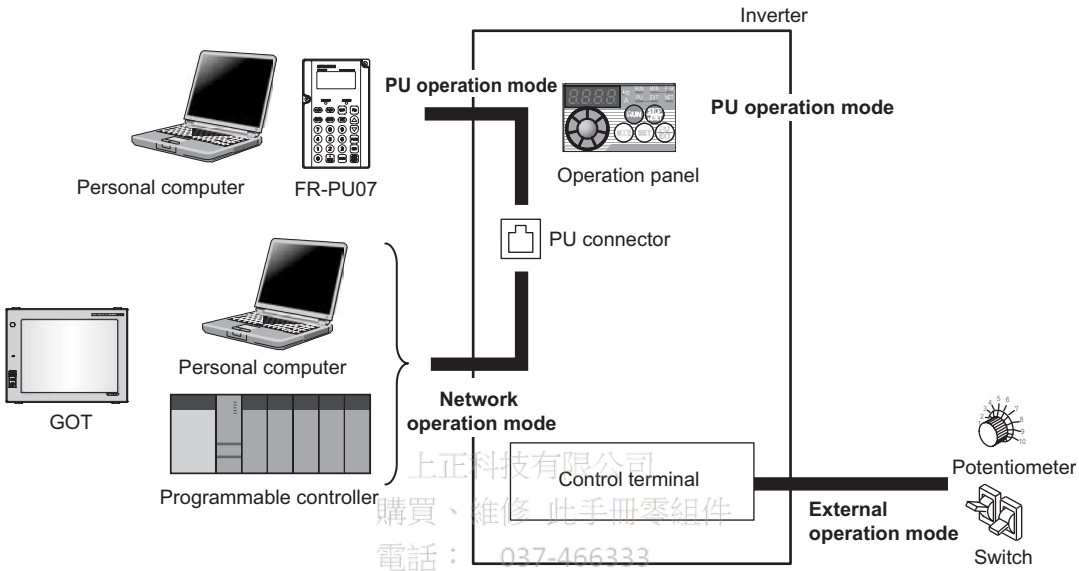

上正科技有限公司
購買、維修 此手冊零組件
電話： 037-466333
Email: service@repairtw.com
Line id: @zzzz
www.repairtw.com

REMARKS

- Either "3" or "4" may be set to select the PU/external combined mode. *Refer to page 165* for details.
- The stop function (PU stop selection) activated by pressing STOP RESET of the operation panel and parameter unit (FR-PU04/FR-PU07) is valid even in other than the PU operation mode in the initial setting.
  (*Refer to Pr. 75 Reset selection/disconnected PU detection/PU stop selection (page 158)*)

(2) Operation mode switching method

● **When "0 or 1" is set in *Pr. 340***

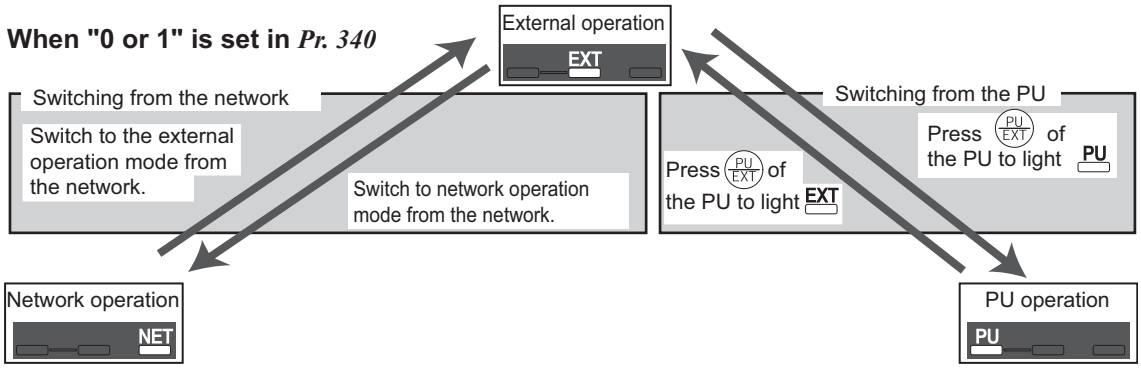

● **When "10" is set in *Pr. 340***

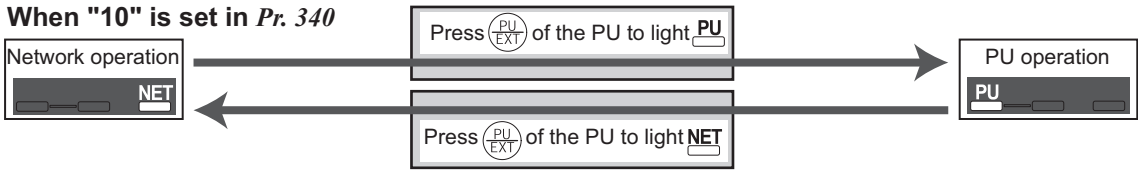

REMARKS

- Refer to the following for switching by the external terminal.
  PU operation external interlock signal (X12) ☞ *Refer to page 171*
  PU-external operation switch-over signal (X16) ☞ *Refer to page 172*
  External-NET operation switchover signal (X65), NET-PU operation switchover signal (X66) ☞ *Refer to page 173*
  Pr. 340 Communication startup mode selection ☞ *Refer to page 175*

長昇科技有限公司
購買、維修、此手冊零組件
電話： 037-466333
Email: service@repairtw.com
Line id: @zzzz
www.repairtw.com

(3) Operation mode selection flow

In the following flowchart, select the basic parameter setting and terminal connection related to the operation mode.

START	Connection	Parameter setting	Operation
Where is the start command source?			
From outside (STF/STR terminal)			
Where is the frequency command source?			
From outside (Terminal 2, 4, JOG, multi-speed, etc.)	STF (forward rotation) /STR (reverse rotation) *(Refer to page 113.)* Terminal 2, 4-5 (analog), RL, RM, RH, JOG, etc.		Frequency setting terminal ON STF(STR)-ON
From the operation panel (digital setting)	STF (forward rotation) /STR (reverse rotation) *(Refer to page 113)*	*Pr. 79* = "3" (External/PU combined operation 1)	Operation panel, PU digital setting STF(STR)-ON
From communication (PU connector (RS-485 communication)	STF (forward rotation) /STR (reverse rotation) *(Refer to page 113)*	*Pr. 338* = "1" *Pr. 340* = "1"	Communication frequency setting command sending STF(STR)-ON
From the operation panel (RUN/FWD/REV key)			
Where is the frequency command source?			
From outside (terminal 2, 4, JOG, multi-speed, etc.)	Terminal 2, 4-5 (analog), RL, RM, RH, JOG, etc.	*Pr. 79* = "4" (external/PU combined operation 2)	Frequency setting terminal ON RUN/FWD/REV key-ON
From the operation panel (digital setting)		*Pr. 79* = "1" (fixed to PU operation)	Digital setting RUN/FWD/REV key-ON
From communication (PU connector (RS-485 communication)	✕ Disabled		
From communication (PU connector (RS-485 communication))			
Where is the frequency command source?			
From outside (terminal 2, 4, JOG, multi-speed, etc.)	Terminal 2, 4-5 (analog), RL, RM, RH, JOG, etc.	*Pr. 339* = "1" *Pr. 340* = "1"	Frequency setting terminal ON Communication start command sending
From the operation panel (digital setting)	✕ Disabled		
From communication (PU connector (RS-485 communication)		*Pr. 340* = "1"	Communication frequency setting command sending Communication start command sending

上正科技有限公司
購買、維修 此手冊零組件
電話： 037-466733
Email: service@repairtw.com
Line id: @zzzz
www.repairtw.com

(4) External operation mode *(setting "0" (initial value), "2")*

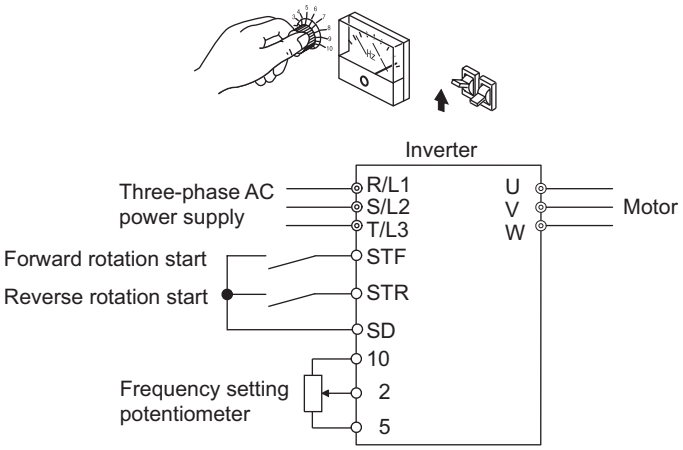

- Select the extenal operation mode when the start command and the frequency command are applied from a frequency setting potentiometer, start switch, etc. which are provided externally and connected to the control circuit terminals of the inverter.
- Basically, parameter changing is disabled in the external operation mode. (Some parameters can be changed. Refer to *page 56* for the parameter list.)
- When "0 or 2" is selected for *Pr. 79*, the inverter enters the external operation mode at power-on. (When using the network operation mode, refer to *page 175*.)
- When parameter changing is seldom necessary, setting "2" fixes the operation mode to the external operation mode.
  When frequent parameter changing is necessary, setting "0" (initial value) allows the operation mode to be changed easily to the PU operation mode by pressing (PU/EXT) of the operation panel. After you switched to the PU operation mode, always return to the external operation mode.
- The STF and STR signal are used as a start command, and the voltage or current signal to terminal 2, 4, multi-speed signal, JOG signal, etc. are used as a frequency commands.

上正科技有限公司
購買、維修 此手冊零組件
電話： 037-466333
Email: service@repairtw.com
Line id: @zzzz
www.repairtw.com

(5) PU operation mode *(setting "1")*

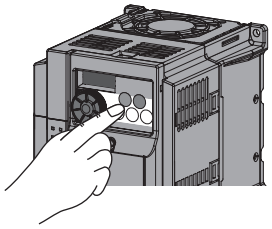

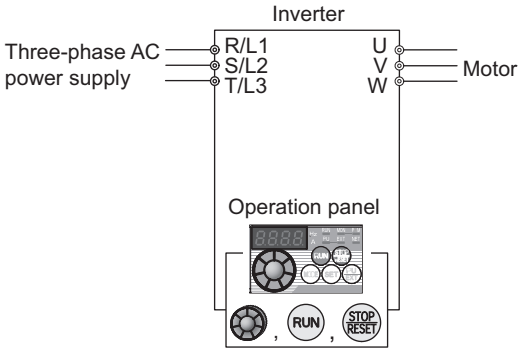

- Select the PU operation mode when applying start and frequency command by only the key operation of the operation panel (FR-PU04/FR-PU07). Also select the PU operation mode when making communication using the PU connector.
- When "1" is selected for *Pr. 79*, the inverter enters the PU operation mode at power-on. You cannot change to the other operation mode.
- The setting dial of the operation panel can be used for setting like a potentiometer. *(Refer to Pr. 161 Frequency setting/key lock operation selection (page 238))*

(6) PU/external combined operation mode 1 *(setting "3")*

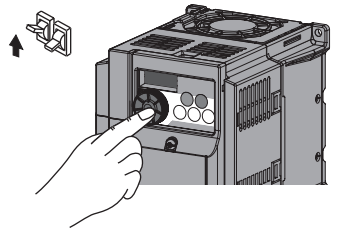

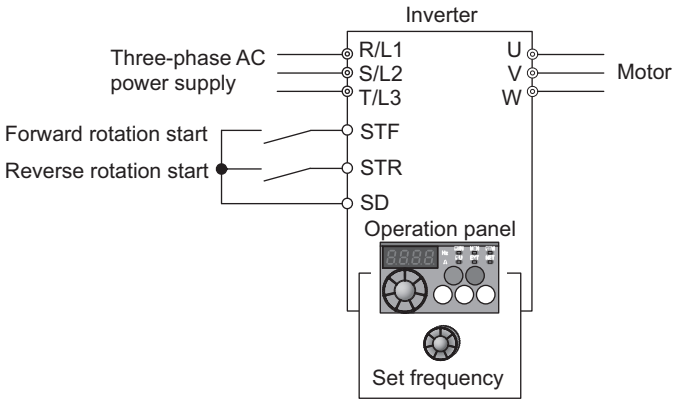

- Select the PU/external combined operation mode 1 when applying frequency command from the operation panel or parameter unit (FR-PU04/FR-PU07) and inputting the start command with the external start switch.
- Select "3" for *Pr. 79*. You cannot change to the other operation mode.
- When a frequency is applied from the external signal by multi-speed setting, it has a higher priority than the frequency command from the PU. When AU is ON, the command signal to terminal 4 is used.

(7) PU/external combined operation mode 2 *(setting "4")*

上正科技有限公司
購買、維修 此手冊零組件
電話： 037-466333
E-mail: service@repairtw.com
Line id: @zzzz
www.repairtw.com

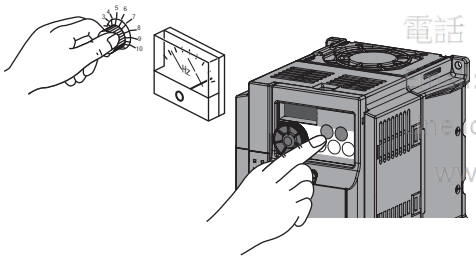

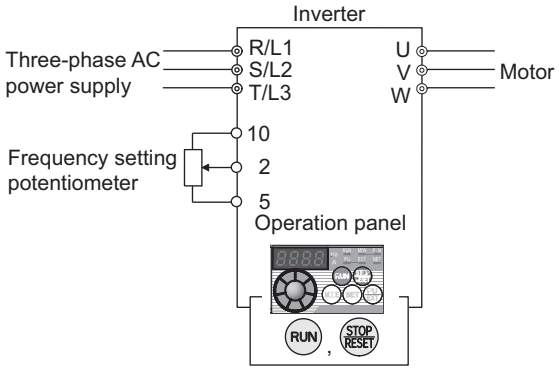

- Select the PU/external combined operation mode 2 when applying frequency command from the external potentiometer, multi-speed or JOG signal and inputting the start command by key operation of the operation panel or parameter unit (FR-PU04/FR-PU07).
- Select "4" for *Pr. 79*. You cannot change to the other operation mode.

(8) Switchover mode *(setting "6")*

•While continuing operation, you can switch among the PU operation, external operation and network operation (NET operation).

Operation Mode Switching	Switching Operation/Operating Status
External operation → PU operation	Select the PU operation mode with the operation panel or parameter unit. •Rotation direction is the same as that of external operation. •The frequency set with the potentiometer (frequency command) or like is used unchanged. (Note that the setting will disappear when power is switched off or the inverter is reset.)
External operation → NET operation	Send the mode change command to the network operation mode through communication. •Rotation direction is the same as that of external operation. •The value set with the setting potentiometer (frequency command) or like is used unchanged. (Note that the setting will disappear when power is switched off or the inverter is reset.)
PU operation → external operation	Press the external operation key of the operation panel or parameter unit. •The rotation direction is determined by the input signal of the external operation. •The set frequency is determined by the external frequency command signal.
PU operation → NET operation	Send the mode change command to the network operation mode through communication. •Rotation direction and set frequency are the same as those of PU operation.
NET operation → external operation	Send the mode change command to the external mode through communication. •Rotation direction is determined by the external operation input signal. •The rotation direction is determined by the input signal of the external operation.
NET operation → PU operation	Select the PU operation mode with the operation panel or parameter unit. •The rotation direction and frequency command in the network operation mode are used unchanged.

(9) PU operation interlock *(setting "7")*

•The PU operation interlock function is designed to forcibly change the operation mode to the external operation mode when the PU operation interlock signal (X12) input turns OFF.
This function prevents the inverter from being inoperative by the external command if the mode is accidentally left unswitched from PU operation mode.

•Set "7" (PU operation interlock) in *Pr. 79*.

•For the terminal used for X12 signal (PU operation interlock signal) input, set "12" to any of *Pr. 178 to Pr. 182 (input terminal function selection)* to assign the function. (Refer to *page 113* for *Pr.178 to Pr.182*.)

•When the X12 signal is not assigned while MRS signal is assigned, function of the MRS signal switches from output stop to PU operation interlock signal.

上市科技有限公司
購買、維修 此手冊零組件
電話： 037-466333
Email: service@repairtw.com
www.repairtw.com

X12 (MRS) Signal	Function/Operation	
	Operation Mode	Parameter Write
ON	Operation mode (external, PU, NET) switching enabled Output stop during external operation	Parameter write enabled (depending on *Pr. 77 Parameter write selection* and each parameter write conditions (Refer to *page 56* for the parameter list))
OFF	Forcibly switched to external operation mode External operation allowed Switching between the PU and Net operation mode is enabled	Parameter write disabled with exception of *Pr. 79*

<Function/operation changed by switching ON/OFF the X12 (MRS) signal>

Operating Condition		X12 (MRS) Signal	Operation Mode	Operating Status	Switching to PU, NET Operation Mode
Operation Mode	Status				
PU/NET	During stop	ON → OFF *1	External *2	If external operation frequency setting and start signal are entered, operation is performed in that status.	Disallowed
	Running	ON → OFF *1			Disallowed
External	During stop	OFF → ON	External *2	During stop	Allowed
		ON → OFF			Disallowed
	Running	OFF → ON		During operation → output stop	Disallowed
		ON → OFF		Output stop → operation	Disallowed

*1 The operation mode switches to the external operation mode independently of whether the start signal (STF, STR) is ON or OFF. Therefore, the motor is run in external operation mode when the X12 (MRS) signal is turned OFF with either of STF and STR ON.

*2 At fault occurrence, pressing (STOP RESET) of the operation panel resets the inverter.

NOTE

- **If the X12 (MRS) signal is ON, the operation mode cannot be switched to the PU operation mode when the start signal (STF, STR) is ON.**
- **When the MRS signal is used as the PU interlock signal, the MRS signal serves as the normal MRS function (output stop) by turning ON the MRS signal and then changing the *Pr. 79* value to other than "7" in the PU operation mode. As soon as "7" is set to *Pr. 79* , the MRS signal acts as the PU interlock signal.**
- **When the MRS signal is used as the PU interlock signal, the logic of the signal is as set in *Pr. 17*. When *Pr. 17* = "2", read ON as OFF and OFF as ON in the above explanation.**
- **Changing the terminal assignment using *Pr. 178 to Pr. 182 (input terminal function selection)* may affect the other functions. Make setting after confirming the function of each terminal.**

(10) Switching of operation mode by external signal (X16 signal)

- When external operation and operation from the operation panel are used together, use of the PU-external operation switching signal (X16) allows switching betwen the PU operation mode and external operation mode during a stop (during a motor stop, start command OFF).
- When *Pr. 79* = any of "0, 6, 7", the operation mode can be switched between the PU operation mode and external operation mode. (*Pr. 79* = "6" At switchover mode, operation mode can be changed during operation)
- For the terminal used for X16 signal input, set "16" to any of *Pr. 178 to Pr. 182 (input terminal function selection)* to assign the function.

Pr. 79 Setting		X16 Signal State Operation Mode		Remarks
		ON (external)	OFF (PU)	
0 (initial value)		External operation mode	PU operation mode	Can be switched to external, PU or NET operation mode
1		PU operation mode		Fixed to PU operation mode
2		External operation mode		Fixed to external operation mode (can be switched to NET operation mode)
3, 4		External/PU combined operation mode		External/PU combined mode fixed
6		External operation mode	PU operation mode	Switching among the external, PU, and NET operation mode is enabled while running.
7	X12 (MRS) ON	External operation mode	PU operation mode	Can be switched to external, PU or NET operation mode (output stop in external operation mode)
	X12 (MRS) OFF	External operation mode		Fixed to external operation mode (forcibly switched to external operation mode)

上正科技有限公司
購買、維修、工業零組件
電話： 03-[illegible]
Email: service@repairtw.com
Line Id: @[illegible]
www.repairtw.com

REMARKS

- The operation mode status changes depending on the setting of *Pr. 340 Communication startup mode selection* and the ON/OFF status of the X65 and X66 signals. (For details, refer to *page 173*)
- The priorities of *Pr. 79* , *Pr. 340* and signals are *Pr. 79* > X12 > X66 > X65 > X16 > *Pr. 340*.

NOTE

- **Changing the terminal assignment using *Pr. 178 to Pr. 182 (input terminal function selection)* may affect the other functions. Make setting after confirming the function of each terminal.**

(11) Switching of operation mode by external signals (X65, X66 signals)

- When *Pr. 79* = any of "0, 2, 6", the operation mode switching signals (X65, X66) can be used to change the PU or external operation mode to the network operation mode during a stop (during a motor stop or start command OFF). (*Pr. 79* = "6" Switchover mode can be changed during operation)
- When switching between the network operation mode and PU operation mode
  1)Set *Pr. 79* to "0" (initial value) or "6".
  2)Set "10" in *Pr. 340 Communication startup mode selection*.
  3)Set "65" in any of *Pr. 178 to Pr. 182* to assign the NET-PU operation switching signal (X65) to the terminal.
  4)The operation mode changes to the PU operation mode when the X65 signal turns ON, or to the network operation mode when the X65 signal turns OFF.

Pr. 340 Setting	*Pr. 79* Setting		X65 Signal State		Remarks
			ON (PU)	OFF (NET)	
10	0 (initial value)		PU operation mode ∗1	NET operation mode ∗2	Cannot be switched to external operation mode
	1		PU operation mode		Fixed to PU operation mode
	2		NET operation mode		Fixed to NET operation mode
	3, 4		External/PU combined operation mode		External/PU combined mode fixed
	6		PU operation mode ∗1	NET operation mode ∗2	Operation mode can be switched with operation continued Cannot be switched to external operation mode
	7	X12 (MRS) ON	Switching among the external and PU operation mode is enabled ∗3		Output stop in external operation mode
		X12 (MRS) OFF	External operation mode		Forcibly switched to external operation mode

∗1 NET operation mode when the X66 signal is ON.
∗2 PU operation mode when the X16 signal is OFF.
∗3 External operation mode when the X16 signal is ON.

上正科技有限公司
購買、維修、出租四電組件
電話： 037-466333
Email: service@repairtw.com
Line id: @zzzz
www.repairtw.com

- When switching between the network operation mode and external operation mode
  1) Set *Pr. 79* to "0 (initial value), 2, 6 or 7". (At the *Pr. 79* setting of "7", the operation mode can be switched when the X12 (MRS) signal is on.)
  2) Set "0 (initial value) or 1" in *Pr. 340 Communication startup mode selection*.
  3) Set "66" in any of *Pr. 178 to Pr. 182* to assign the NET-PU operation switching signal (X66) to the terminal.
  4) The operation mode changes to the network operation mode when the X66 signal turns ON, or to the external operation mode when the X66 signal turns OFF.

Pr. 340 Setting	*Pr. 79* Setting		X66 Signal State		Remarks
			ON (NET)	OFF (external)	
0 (initial value), 1	0 (initial value)		NET operation mode	External operation mode ∗1	
	1		PU operation mode		Fixed to PU operation mode
	2		NET operation mode	External operation mode	Cannot be switched to PU operation mode
	3, 4		External/PU combined operation mode		External/PU combined mode fixed
	6		NET operation mode	External operation mode ∗1	Operation mode can be switched with operation continued
	7	X12 (MRS) ON	NET operation mode	External operation mode ∗1	Output stop in external operation mode
		X12 (MRS) OFF	External operation mode		Forcibly switched to external operation mode

∗1 PU operation mode when the X16 signal is OFF. When the X65 signal has been assigned, the operation mode changes with the ON/OFF state of the X65 signal.

REMARKS

- The priorities of *Pr. 79* , *Pr. 340* and signals are *Pr. 79* > X12 > X66 > X65 > X16 > *Pr. 340*.

NOTE

- **Changing the terminal assignment using *Pr. 178 to Pr. 182 (input terminal function selection)* may affect the other functions. Make setting after confirming the function of each terminal.**

Parameters referred to

Pr. 15 Jog frequency ☞ Refer to page 91
Pr. 4 to 6, Pr. 24 to 27, Pr. 232 to Pr. 239 Multi-speed operation ☞ Refer to page 89
Pr. 75 Reset selection/disconnected PU detection/PU stop selection ☞ Refer to page 158
Pr. 161 Frequency setting/key lock operation selection ☞ Refer to page 238
Pr. 178 to Pr. 182 (input terminal function selection) ☞ Refer to page 113
Pr. 190, Pr. 192 (output terminal function selection) ☞ Refer to page 119
Pr. 340 Communication startup mode selection ☞ Refer to page 175

上正科技有限公司
購買、維修 此手冊零組件
電話： 037-466333
Email: service@repairtw.com
Line id: @zzzz
www.repairtw.com

4.18.2 Operation mode at power-on (Pr. 79, Pr. 340)

When power is switched on or when power comes back on after instantaneous power failure, the inverter can be started up in the network operation mode.
After the inverter has started up in the network operation mode, parameter write and operation can be performed from a program.
Set this mode for communication operation using PU connector.

Parameter Number	Name	Initial Value	Setting Range	Description
79	**Operation mode selection**	0	0 to 4, 6, 7	Operation mode selection *(Refer to page 168)*
340 *	**Communication startup mode selection**	0	0	As set in *Pr. 79*.
			1	Network operation mode
			10	Network operation mode Operation mode can be changed between the PU operation mode and network operation mode from the operation panel.

The above parameters can be changed during a stop in any operation mode.

* The above parameters can be set when *Pr. 160 Extended function display selection* = "0". *(Refer to page 162)*

(1) Specify operation mode at power-on *(Pr. 340)*

•Depending on the *Pr. 79* and *Pr. 340* settings, the operation mode at power-on (reset) changes as described below.

Pr. 340 Setting	*Pr. 79* Setting	Operation Mode at Power-on, Power Restoration, Reset	Operation Mode Switching
0 (initial value)	0 (initial value)	External operation mode	Switching among the external, PU and Net operation mode is enabled *1
	1	PU operation mode	Fixed to PU operation mode
	2	External operation mode	Switching between the external and NET operation mode is enabled Switching to PU operation mode disabled
	3, 4	External/PU combined mode	Operation mode switching disabled
	6	External operation mode	Switching among the external, PU, and NET operation mode is enabled while running.
	7	X12 (MRS) signal ON .... External operation mode	Switching among the external, PU and Net operation mode is enabled *1
		X12 (MRS) signal OFF ... External operation mode	Fixed to external operation mode (Forcibly switched to external operation mode.)
1	0	NET operation mode	Same as when *Pr. 340* = "0"
	1	PU operation mode	
	2	NET operation mode	
	3, 4	External/PU combined mode	
	6	NET operation mode	
	7	X12 (MRS) signal ON ..... NET operation mode	
		X12(MRS) signal OFF ..... External operation mode	
10	0	NET operation mode	Switching between the PU and Net operation mode is enabled *2
	1	PU operation mode	Same as when *Pr. 340* = "0"
	2	NET operation mode	Fixed to NET operation mode
	3, 4	External/PU combined mode	Same as when *Pr. 340* = "0"
	6	NET operation mode	Switching between the PU and NET operation mode is enabled while running *2
	7	External operation mode	Same as when *Pr. 340* = "0"

*1 Operation mode can not be directly changed between the PU operation mode and network operation mode

*2 Operation mode can be changed between the PU operation mode and network operation mode with PU/EXT key of the operation panel and X65 signal.

上正科技有限公司
購買、維修 此手機零組件
電話： 037-466
Email: service@
Line id: @zzzz
www.repairtw.com

Parameters referred to

Pr. 79 Operation mode selection *Refer to page 165*

4.18.3 Start command source and frequency command source during communication operation (Pr. 338, Pr. 339, Pr. 551)

When the RS-485 communication with the PU connector is used, the external start command and frequency command can be made valid. Command source in the PU operation mode can be selected.
From the communication device, parameter unit, etc. which have command source, parameter write or start command can be executed. Parameter read or monitoring can be executed in any operation mode.

Parameter Number	Name	Initial Value	Setting Range	Description
338	Communication operation command source	0	0	Start command source communication
			1	Start command source external
339	Communication speed command source	0	0	Frequency command source communication
			1	Frequency command source external
			2	Frequency command source external (Frequency command from communication is valid, frequency command from terminal 2 is invalid)
551 *	PU mode operation command source selection	9999	2	PU connector is the command source when PU operation mode.
			4	Operation panel is the command source when PU operation mode.
			9999	Parameter unit automatic recognition Normally, operation panel is the command source. When the parameter unit is connected to the PU connector, PU is the command source.

The above parameters can be set when *Pr. 160 Extended function display selection* = "0". *(Refer to page 162)*

* *Pr. 551* is always write-enabled.

(1) Selects the command source of the PU operation mode *(Pr. 551)*

- Any of the operation panel, PU connector can be specified as the command source in the PU operation mode.
- In the PU operation mode, set *Pr. 551* to "2" when executing parameter write, start command or frequency command during the RS-485 communication with PU connector.

PU...PU operation mode, NET...network operation mode, —...without command source

Pr. 551 Setting	Command Source			Remarks
	Operation panel	Parameter unit	RS-485 communication	
2	—	PU	PU *1	Switching to NET operation mode disabled
4	PU	—	NET	
9999 (initial value)	PU *2	PU *2	NET	

*1 The Modbus-RTU protocol cannot be used in the PU operation mode. When using the Modbus-RTU protocol, set *Pr. 551* ≠ "2".

*2 When *Pr. 551* = "9999", the priorities of the PU control source is parameter unit (FR-PU04/FR-PU07) > operation panel.

NOTE

- **When performing the RS-485 communication with the PU connector when *Pr. 551* = "9999", PU mode command source does not automatically change to the PU connector.**
- **When *Pr. 551* = "2" (PU mode PU connector), the operation mode cannot be switched to the network operation mode.**
- **Changed setting value is valid when powering on or resetting the inverter.**
- **The Modbus-RTU protocol cannot be used in the PU operation mode. Select network operation mode (NET mode command source).**

(2) Controllability through communication

•Controllability through communcation in each operation mode is shown below.

•Monitoring and parameter read can be performed from any operation regardless of operation mode.

Operation Location	Condition (*Pr. 551* Setting)	Operation Mode / Item	PU Operation	External Operation	External/PU Combined Operation Mode 1 (*Pr. 79* = 3)	External/PU Combined Operation Mode 2 (*Pr. 79* = 4)	NET Operation
Control by RS-485 communication from PU connector	2 (PU connector)	Run command (start)	○	×	×	○	×
		Run command (stop)	○	Δ *3	Δ *3	○	×
		Running frequency setting	○	×	○	×	×
		Parameter write	○*4	× *5	○*4	○ *4	× *5
		Inverter reset	○	○	○	○	×
	Other than the above	Run command (start)	×	×	×	×	○ *1
		Run command (stop)	×	×	×	×	○ *1
		Running frequency setting	×	×	×	×	○ *1
		Parameter write	× *5	× *5	× *5	× *5	○ *4
		Inverter reset	×	×	×	×	○ *2
Control circuit external terminals	—	Inverter reset	○	○	○	○	○
		Run command (start, stop)	×	○	○	×	× *1
		Frequency setting	×	○	Δ *6	○	× *1

○: Enabled, ×: Disabled, Δ: Some are enabled

*1 As set in *Pr.338 Communication operation command source* and *Pr. 339 Communication speed command source (Refer to page 176)*
*2 At occurrence of RS-485 communication error, the inverter cannot be reset from the computer.
*3 Enabled only when stopped by the PU. At a PU stop, PS is displayed on the operation panel. As set in *Pr. 75 PU stop selection. (Refer to page 158)*
*4 Some parameters may be write-disabled according to the *Pr. 77 Parameter write selection* setting and operating status. *(Refer to page 161)*
*5 Some parameters are write-enabled independently of the operation mode and command source presence/absence. When *Pr. 77* = "2", write is enabled. (Refer to the parameter list on *page 56*) Parameter clear is disabled.
*6 Available with multi-speed setting and terminal 4-5 (valid when AU signal is ON).

(3) Operation at error occurrence

Email: service@repairtw.com
Line Id: @zzzz

Error Definition	Condition (*Pr. 551* setting) / Operation Mode	PU Operation	External Operation	External/PU Combined Operation Mode 1 (*Pr. 79* = 3)	External/PU Combined Operation Mode 2 (*Pr. 79* = 4)	NET Operation
Inverter fault	—	Stop				
PU disconnection of the PU	2 (PU connector) 9999 (automatic recognition)	Stop/continued *1, *3				
	Other than the above	Stop/continued*1				
RS-485 communication error of the PU connector	2 (PU connector)	Stop/ continued*2	Continued		Stop/ continued*2	—
	Other than the above	Continued				Stop/ continued*2

*1 Can be selected using *Pr. 75 Reset selection/disconnected PU detection/PU stop selection.*
*2 Can be selected using *Pr. 122 PU communication check time interval*.
*3 In the PU JOG operation mode, operation is always stopped when the PU is disconnected. Whether fault (E.PUE) occurrence is allowed or not is as set in *Pr. 75 Reset selection/disconnected PU detection/PU stop selection*.

(4) Selection of control source in network operation mode *(Pr. 338, Pr. 339)*

- There are two control sources: operation command source, which controls the signals related to the inverter start command and function selection, and speed command source, which controls signals related to frequency setting.
- In network operation mode, the commands from the external terminals and communication are as listed below.

Operation Location Selection					*Pr. 338 Communication operation command source* / *Pr. 339 Communication speed command source*	0: NET			1: External			Remarks
						0: NET	1: External	2: External	0: NET	1: External	2: External	
Fixed function (terminal-equivalent function)					Running frequency from communication	NET	—	NET	NET	—	NET	
					Terminal 2	—	External	—	—	External	—	
					Terminal 4	—	External		—	External		
Selective function	*Pr. 178 to Pr. 182* setting	0	RL	Low-speed operation command/remote setting clear		NET	External		NET	External		*Pr. 59* = "0" (multi-speed) *Pr. 59* ≠ "0" (remote)
		1	RM	Middle-speed operation command/remote setting function		NET	External		NET	External		
		2	RH	High-speed operation command/remote setting function		NET	External		NET	External		
		3	RT	Second function selection		NET			External			
		4	AU	Terminal 4 input selection		—	Combined		—	Combined		
		5	JOG	Jog operation selection		—			External			
		7	OH	External thermal relay input		External						
		8	REX	15-speed selection		NET	External		NET	External		*Pr. 59* = "0" (multi-speed)
		10	X10	Inverter run enable signal		External						
		12	X12	PU operation external interlock		External						
		14	X14	PID control valid terminal		NET	External		NET	External		
		16	X16	PU-external operation switchover		External						
		18	X18	V/F switchover		NET			External			
		24	MRS	Output stop		Combined			External			*Pr. 79* ≠ "7"
				PU operation interlock		External						*Pr. 79* = "7" When the X12 signal is not assigned
		25	STOP	Start self-holding selection		—			External			
		60	STF	Forward rotation command		NET			External			
		61	STR	Reverse rotation command		NET			External			
		62	RES	Inverter reset		External						
		65	X65	PU/NET operation switchover		External						
		66	X66	External/NET operation switchover		External						
		67	X67	Command source switchover		External						

上正科技有限公司
購買、維修 此手冊零組件
電話: 037-[illegible]
Email: service@repairtw.com
Line id: @[illegible]
www.repairtw.com

[Explanation of table]

External : Command is valid only from control terminal.
NET : Command only from communication is valid.
Combined : Command from both control terminal and communication is valid.
— : Command from either of control terminal and communication is invalid.

REMARKS

- The command source of communication is as set in *Pr. 551* .
- The *Pr. 338* and *Pr. 339* settings can be changed while the inverter is running when *Pr. 77* = "2". Note that the setting change is reflected after the inverter has stopped. Until the inverter has stopped, communication operation command source and communication speed command source before the setting change are valid.

(5) Switching of command source by external signal (X67)

- In the network operation mode, the command source switching signal (X67) can be used to switch the start command source and speed command source.
- Set "67" to any of *Pr. 178 to Pr. 182 (input terminal function selection)* to assign the X67 signal to the control terminal.
- When the X67 signal is OFF, the start command source and speed command source are control terminal.

X67 Signal State	Start Command Source	Speed Command Source
No signal assignment	According to *Pr. 338*	According to *Pr. 339*
ON		
OFF	Command is valid only from control terminal.	

REMARKS

- The ON/OFF state of the X67 signal is reflected only during a stop. It is reflected after a stop when the terminal is switched while the inverter is running.
- When the X67 signal is OFF, a reset via communication is disabled.

NOTE

- **Changing the terminal assignment using *Pr. 178 to Pr. 182 (input terminal function selection)* may affect the other functions. Make setting after confirming the function of each terminal.**

Parameters referred to

Pr. 59 Remote function selection ☞ *Refer to page 93*
Pr. 79 Operation mode selection ☞ *Refer to page 165*

上正科技有限公司
購買、維修 此手冊零組件
電話： 037-466333
Email: service@repairtw.com
Line id: @zzzz
www.repairtw.com

4.19 Communication operation and setting

Purpose	Parameter that should be Set		Refer to Page
Communication operation from PU connector	Initial setting of computer link communication (PU connector)	Pr. 117 to Pr. 124	183
	Modbus-RTU communication specifications	Pr. 117, Pr. 118, Pr. 120, Pr. 122, Pr. 343, Pr. 502, Pr. 549	200
Restrictions on parameter write through communication	Communication EEPROM write selection	Pr. 342	187

4.19.1 Wiring and configuration of PU connector

Using the PU connector, you can perform communication operation from a personal computer, etc.
When the PU connector is connected with a personal, FA or other computer by a communication cable, a user program can run and monitor the inverter or read and write to parameters.

(1) PU connector pin-outs

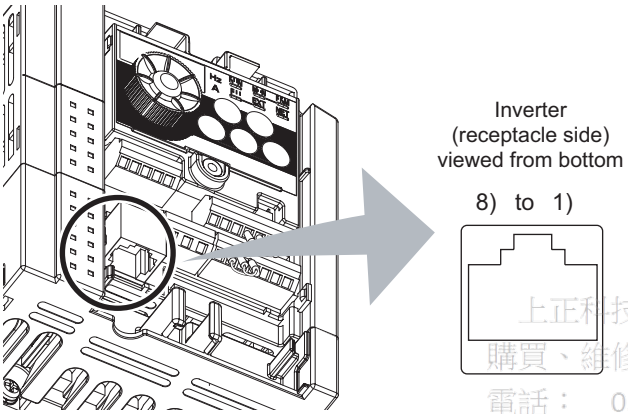

Pin Number	Name	Description
1)	SG	Earth (ground) (connected to terminal 5)
2)	—	Parameter unit power supply
3)	RDA	Inverter receive+
4)	SDB	Inverter send-
5)	SDA	Inverter send+
6)	RDB	Inverter receive-
7)	SG	Earth (ground) (connected to terminal 5)
8)	—	Parameter unit power supply

上正科技有限公司
購買、維修 此手冊零組件
電話： 037-466333
Email: service@repairtw.com
www.repairtw.com

NOTE

- **Pins No. 2 and 8 provide power to the parameter unit. Do not use these pins for RS-485 communication.**
- **When making RS-485 communication between the FR-D700 series, FR-E500 series and FR-S500 series, incorrect connection of pins No.2 and No.8 (parameter unit power supply) of the above PU connector may result in the inverter malfunction or failure.**
  When multiple inverters are connected using pins No.2 and No.8, power is provided from the inverter which is powered on to the inverters which are powered off in case inverters which are powered on and off are mixed. In such case, a protective circuit of the inverter, which is on, functions to stop communication.
  When connecting multiple inverters for RS-485 communication, make sure to disconnect cables from No.2 and No.8 so that pins No.2 and No.8 are not connected between inverters.

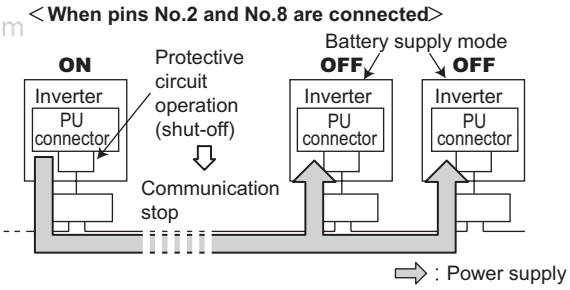

When using the RS-485 converter which receives power from the inverter, make sure that power is provided from one inverter only. (*Refer to the figure below.*)

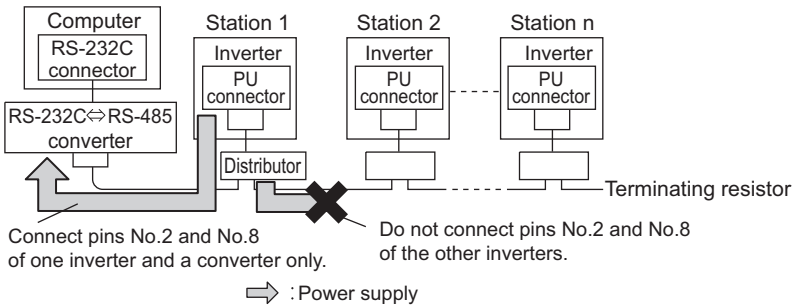

- **Do not connect the PU connector to the computer's LAN board, FAX modem socket or telephone modular connector. The product could be damaged due to differences in electrical specifications.**

(2) PU connector communication system configuration

●Connection of a computer to the inverter (1:1 connection)

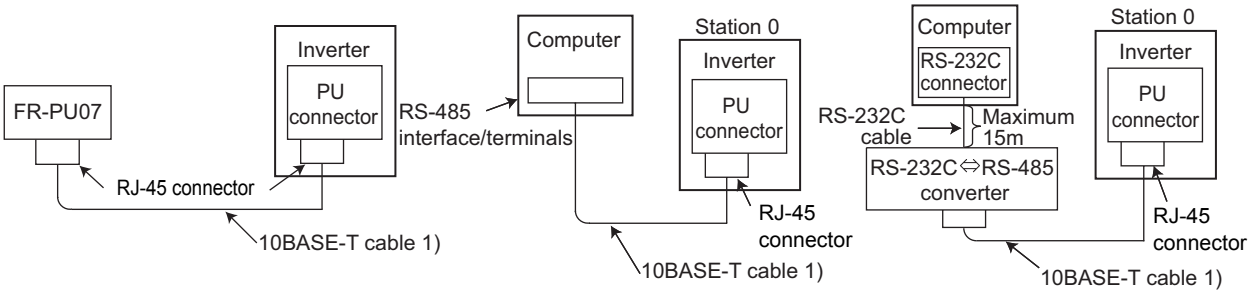

●Combination of computer and multiple inverters (1:n connection)

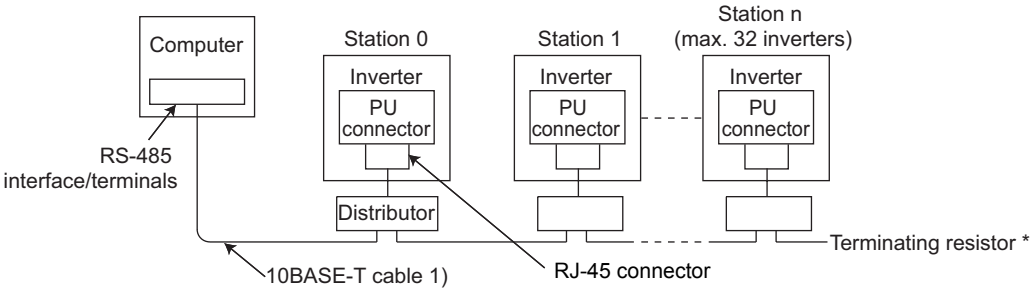

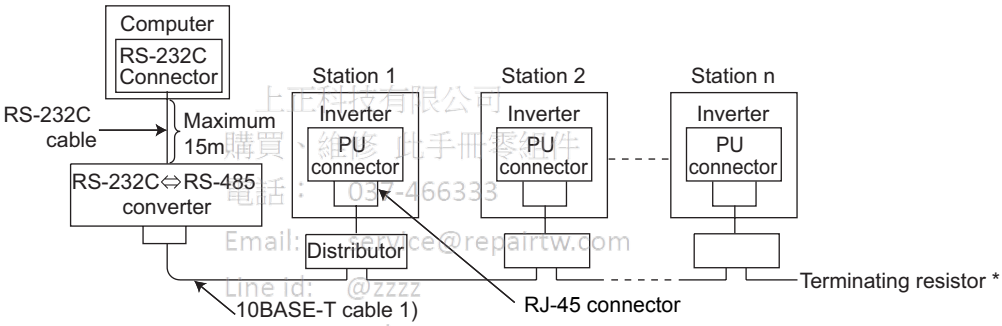

上正科技有限公司
購買、維修 此手冊零組件
電話： 03-466333
Email: service@repairtw.com
Line Id: @zzzz
www.repairtw.com

* The inverters may be affected by reflection depending on the transmission speed or transmission distance. If this reflection hinders communication, provide a terminating resistor. If the PU connector is used to make a connection, use a distributor since a terminating resistor cannot be fitted. Connect the terminating resistor to only the inverter remotest from the computer. (Terminating resistor: 100Ω)

REMARKS

- Refer to the following when fabricating the cable on the user side.
  Examples of products available on the market (as of February, 2008)

	Product	Type	Maker
1)	10BASE-T cable	SGLPEV-T 0.5mm × 4P ∗1	Mitsubishi Cable Industries, Ltd.

∗1 Do not use pins No. 2, 8 of the 10BASE-T cable. *(Refer to page 180)*

(3) Connection with RS-485 computer

●Wiring of one RS-485 computer and one inverter

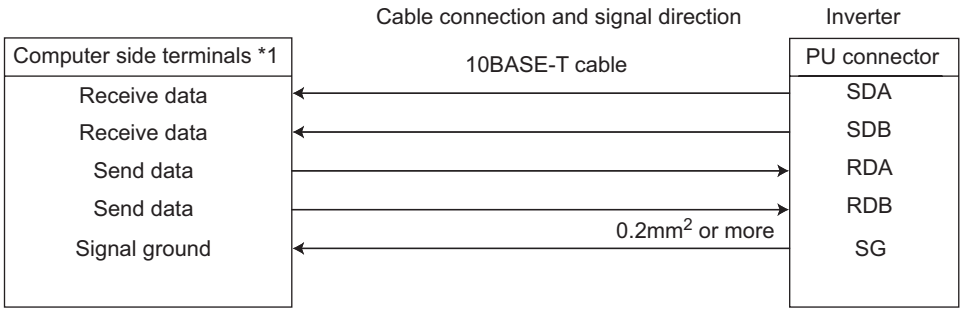

●Wiring of one RS-485 computer and "n" (multiple) inverters

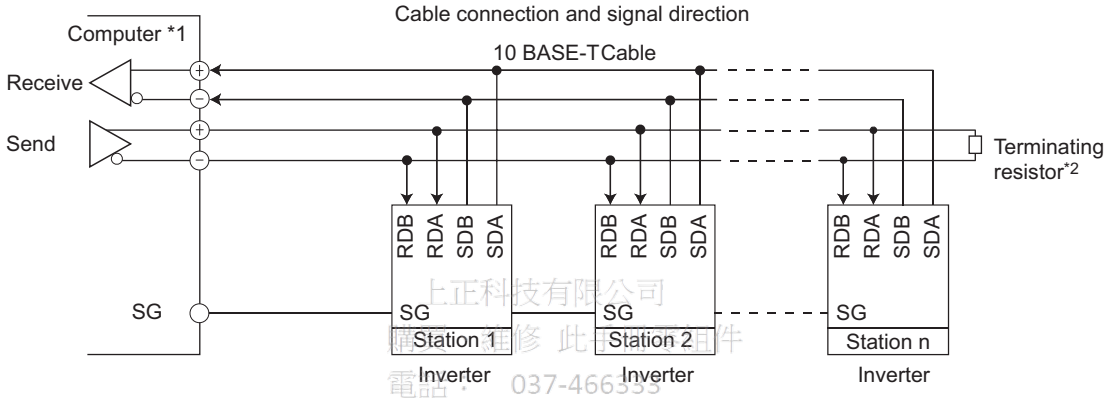

上正科技有限公司
購買、維修 此手冊零件
電話： 037-466333
www.repairtw.com

*1 Make connection in accordance with the instruction manual of the computer to be used with.
Fully check the terminal numbers of the computer since they vary with the model.

*2 The inverters may be affected by reflection depending on the transmission speed or transmission distance. If this reflection hinders communication, provide a terminating resistor. If the PU connector is used to make a connection, use a distributor since a terminating resistor cannot be fitted. Connect the terminating resistor to only the inverter remotest from the computer. (Terminating resistor: 100Ω)

NOTE

- **Do not use pins No. 2, 8 of the 10BASE-T cable.** *(Refer to page 180)*
- **When making RS-485 communication among the FR-D700 series, FR-E500 series and FR-S500 series, incorrect connection of pins No.2 and 8 (parameter unit power supply) of the above PU connector may result in the inverter malfunction or failure.** *(Refer to page 180)*

(4) Two-wire type connection

If the computer is 2-wire type, a connection from the inverter can be changed to 2-wire type by passing wires across reception terminals and transmission terminals of the PU connector pin.

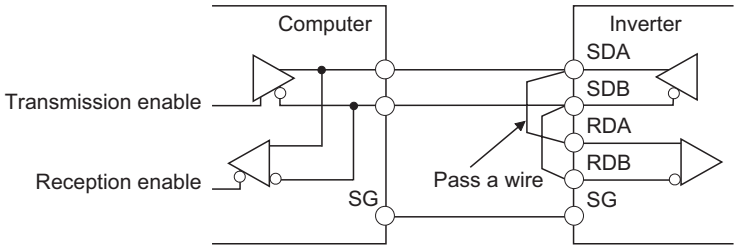

REMARKS

- A program should be created so that transmission is disabled (receiving state) when the computer is not sending and reception is disabled (sending state) during sending to prevent the computer from receiving its own data.
- The passed wiring length should be as short as possible.

4.19.2 Initial settings and specifications of RS-485 communication (Pr. 117 to Pr. 120, Pr. 123, Pr. 124, Pr. 549)

Used to perform required settings for RS-485 communication between the inverter and personal computer.

- Use PU connector of the inverter for communication.
- You can perform parameter setting, monitoring, etc. using Mitsubishi inverter protocol or Modbus-RTU protocol.
- To make communication between the personal computer and inverter, setting of the communication specifications must be made to the inverter in advance.
  Data communication cannot be made if the initial settings are not made or there is any setting error.

Parameter Number	Name	Initial Value	Setting Range	Description	
117	PU communication station number	0	0 to 31 (0 to 247) *1	Inverter station number specification Set the inverter station numbers when two or more inverters are connected to one personal computer.	
118	PU communication speed	192	48, 96, 192, 384	Communication speed The setting value X 100 equals to the communication speed. Example)19200bps if 192	
119	PU communication stop bit length	1		Stop bit length	Data length
			0	1bit	8bit
			1	2bit	
			10	1bit	7bit
			11	2bit	
120	PU communication parity check	2	0	Without parity check	
			1	With odd parity check	
			2	With even parity check	
123	PU communication waiting time setting	9999	0 to 150ms	Set the waiting time between data transmission to the inverter and response.	
			9999	Set with communication data.	
124	PU communication CR/LF selection	1	0	Without CR/LF	
			1	With CR	
			2	With CR/LF	
549	Protocol selection	0	0	Mitsubishi inverter (computer link operation) protocol	
			1	Modbus-RTU protocol	

The above parameters can be set when *Pr. 160 Extended function display selection* = "0". *(Refer to page 162)*

*1 When "1" (Modbus-RTU protocol) is set in *Pr. 549*, the setting range within parenthesis is applied.

上正科技有限公司
購買、維修、此手機零組件
電話： 037-466333
Email: service@repairtw.com
Line Id: @zzzz
www.repairtw.com

NOTE

- **Always reset the inverter after making the initial settings of the parameters. After you have changed the communication-related parameters, communication cannot be made until the inverter is reset.**

4.19.3 Operation selection at communication error occurrence (Pr. 121, Pr. 122, Pr. 502)

You can select the inverter operation when a communication line error occurs during RS-485 communication from the PU connector.

Parameter Number	Name	Initial Value	Setting Range	Description
121	Number of PU communication retries	1	0 to 10	Number of retries at data receive error occurrence. If the number of consecutive errors exceeds the permissible value, the inverter will come to trip (depends on *Pr. 502*). Valid only Mitsubishi inverter (computer link operation) protocol
			9999	If a communication error occurs, the inverter will not come to trip.
122	PU communication check time interval	0	0	RS-485 communication can be made. Note that a communication fault (E.PUE) occurs as soon as the inverter is switched to the operation mode with command source. (NET mode at initial value)
			0.1 to 999.8s	Communication check (signal loss detection) time interval If a no-communication state persists for longer than the permissible time, the inverter will come to trip (depends on *Pr. 502*).
			9999	No communication check (signal loss detection)
502	Stop mode selection at communication error	0		**At fault occurrence** / **Indication** / **Fault output** / **At fault removal**
			0	Coasts to stop / E.PUE / Output / Stop (E.PUE)
			1	Decelerates to stop / After stop E.PUE / Output after stop / Stop (E.PUE)
			2	Decelerates to stop / After stop E.PUE / Without output / Automatic restart functions

The above parameters can be set when *Pr. 160 Extended function display selection* = "0". *(Refer to page 162)*

上正科技有限公司
電話： 037-466333
Email: service@repairtw.com
www.repairtw.com

(1) Retry count setting *(Pr.121)*

- Set the permissible number of retries at data receive error occurrence. (Refer to *page 192* for data receive error for retry)
- When data receive errors occur consecutively and exceed the permissible number of retries set, an inverter trips (E.PUE) and a motor stops (as set in *Pr. 502*).
- When "9999" is set, an inverter fault is not provided even if data receive error occurs but an alarm signal (LF) is output. For the terminal used for the LF signal output, assign the function by setting "98 (positive logic) or 198 (negative logic)" in *Pr. 190 or Pr. 192 (output terminal function selection)*.

Example: PU connector communication, *Pr. 121* = "1" (initial value)

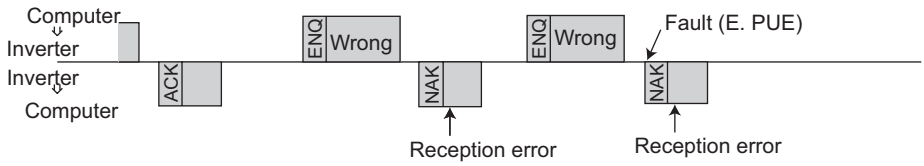

Example: PU connector communication, *Pr. 121* = "9999"

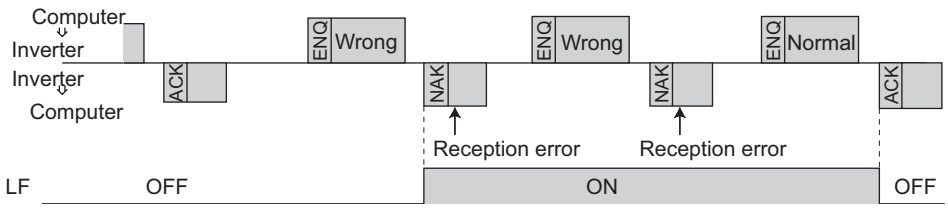

REMARKS

- *Pr. 121* is valid only when Mitsubishi inverter (computer link operation) protocol is selected. *Pr. 121* is not valid when Modbus-RTU communication protocol is selected.

(2) Signal loss detection *(Pr.122)*

- If a signal loss (communication stop) is detected between the inverter and computer as a result of a signal loss detection, a communication fault (E.PUE) occurs and the inverter trips. (as set in *Pr. 502*).
- When the setting is "9999", communication check (signal loss detection) is not made.
- When the setting value is "0" (initial value), RS-485 communication can be made. However, a communication fault (E.PUE) occurrs as soon as the inverter is switched to the operation mode (network operation mode in the initial setting) with the control.
- A signal loss detection is made when the setting is any of "0.1s to 999.8s". To make a signal loss detection, it is necessary to send data (refer to Mitsubishi inverter protcol control code *(page 191)*, Modbus-RTU comunciation protocol *(page 201)*) from the computer within the communication check time interval. (The inverter makes communication check (clearing of communication check counter) regardless of the station number setting of the data sent from the master).
- Communication check is made from the first communication in the operation mode with control source valid (network operation mode in the initial setting).

Example: PU connector communication, *Pr. 122* = "0.1 to 999.8s"

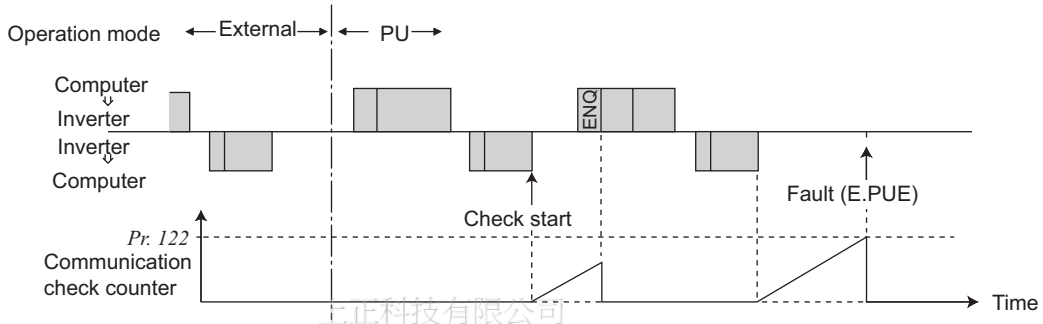

上正科技有限公司
購買、維修 此手冊零組件
電話: 07-7810338
Email: service@repairtw.com
Line id: @zzzz

⚠ CAUTION

⚠ **Always set the communication check time interval before starting operation to prevent hazardous conditions. Data communication is not started automatically but is made only once when the computer provides a communication request. If communication is disabled during operation due to signal cable breakage etc., the inverter cannot be stopped. When the communication check time interval has elapsed, the inverter trips (E.PUE).**
The inverter can be coasted to a stop by turning on its RES signal or by switching power off.

⚠ **If communication is broken due to signal cable breakage, computer fault, etc, the inverter does not detect such a fault. This should be fully noted.**

(3) Stop operation selection at occurrence of communication fault *(Pr. 502)*

•Stop operation when retry count exceeds (Mitsubishi inverter protocol only) or signal loss detection error occurs can be selected.

Operation at fault occurrence

Pr. 502 Setting	Operation	Indication	Fault Output
0 (initial value)	Coasts to stop	E. PUE lit	Provided
1	Decelerates to stop	E. PUE lit after stop	Provided after stop
2			Not provided

Operation at fault removal

Pr.502 Setting	Operation	Indication	Fault Output
0 (initial value)	Kept stopped	E. PUE	Kept provided
1			
2	Automatic restart functions	Normal display	Not provided

●*Pr. 502* setting "0" (initial value)

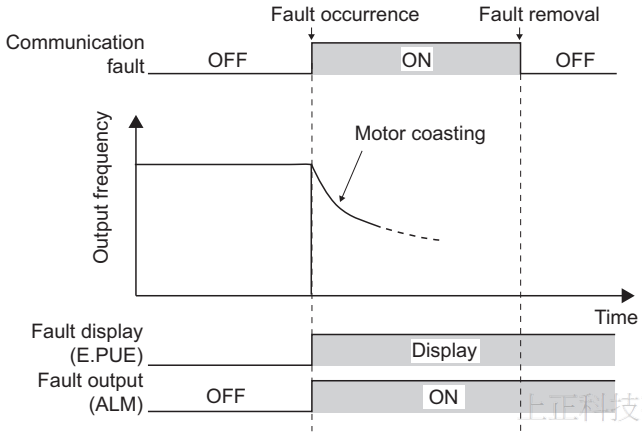

●*Pr. 502* setting "1"

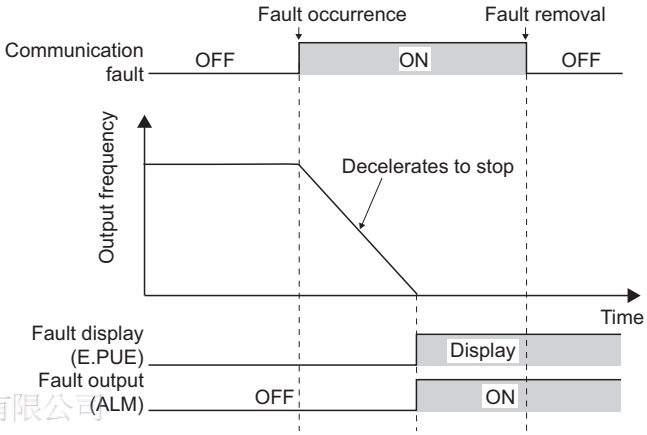

●*Pr. 502* setting "2"

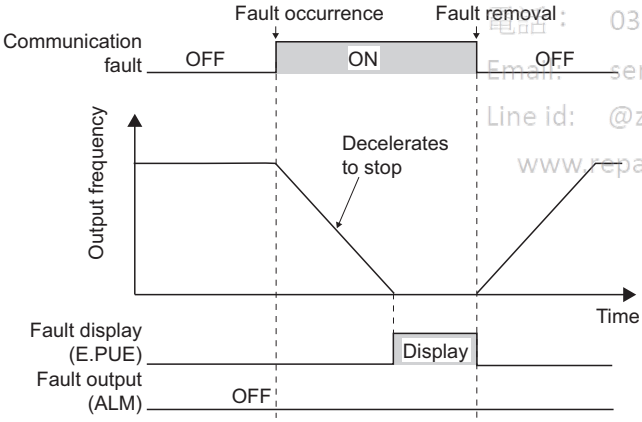

上正科技有限公司
購買、維修 此手冊零組件
電話： 037-466333
Email: service@repairtw.com
Line id: @zzzz
www.repairtw.com

REMARKS

- The fault output indicates fault output signal (ALM signal) or alarm bit output.
- When the setting was made to provide a fault output, the fault description is stored into the faults history. (The fault description is written to the faults history when a fault output is provided.)
  When no fault output is provided, the fault definition overwrites the fault indication of the faults history temporarily, but is not stored.
  After the fault is removed, the fault indication returns to the ordinary monitor, and the faults history returns to the preceding fault indication.
- When the *Pr. 502* setting is "1 or 2", the deceleration time is the ordinary deceleration time setting (e.g. *Pr. 8, Pr. 44, Pr. 45*). In addition, acceleration time for restart is the normal acceleration time (e.g. *Pr. 7, Pr. 44*).
- When "2" is set in *Pr. 502*, run command/speed command at restart follows the command before an fault occurrence.
- When "2" is set in *Pr. 502* at occurrence of a communication error and the error is removed during deceleration, the inverter accelerates again at that point.

Parameters referred to

Pr. 7 Acceleration time, Pr. 8 Deceleration time ☞ *Refer to page 96*
Pr. 190, Pr. 192 (output terminal function selection) ☞ *Refer to page 119*

4.19.4 Communication EEPROM write selection (Pr. 342)

When parameter write is performed from RS-485 comuunication with the inverter PU connector, parameters storage device can be changed from EEPROM + RAM to RAM only. Set when a frequent parameter change is necessary.

Parameter Number	Name	Initial Value	Setting Range	Description
342	Communication EEPROM write selection	0	0	Parameter values written by communication are written to the EEPROM and RAM.
			1	Parameter values written by communication are written to RAM.

The above parameter can be set when *Pr. 160 Extended function display selection* = "0". *(Refer to page 162)*

- When changing the parameter values frequently, set "1" in *Pr. 342* to write them to the RAM only.
  The life of the EEPROM will be shorter if parameter write is performed frequently with the setting unchanged from "0 (initial value)" (EEPROM write).

REMARKS

- When "1" (write to RAM only) is set in *Pr. 342*, powering off the inverter will erase the changed parameter values. Therefore, the parameter values available when power is switched on again are the values stored in EEPROM previously.

上正科技有限公司
購買、維修 此手冊零組件
電話： 037-466333
Email: service@repairtw.com
Line id: @zzzz
www.repairtw.com

4.19.5 Mitsubishi inverter protocol (computer link communication)

You can perform parameter setting, monitoring, etc. from the PU connector of the inverter using the Mitsubishi inverter protocol (computer link communication).

(1) Communication

•The communication specifications are given below.

Item		Description	Related Parameter
Communication protocol		Mitsubishi protocol (computer link)	Pr. 549
Conforming standard		EIA-485 (RS-485)	—
Number of connectable devices		1:N (maximum 32 units), setting is 0 to 31 stations	Pr. 117
Communication speed	PU connector	Selected from among 4800/9600/19200 and 38400bps	Pr. 118
Control procedure		Asynchronous	—
Communication method		Half-duplex	—
Communication	Character system	ASCII (7 bits or 8 bits can be selected)	Pr. 119
	Start bit	1bit	—
	Stop bit length	1 bit or 2 bits can be selected	Pr. 119
	Parity check	Check (even, odd) or no check can be selected	Pr. 120
	Error check	Sum code check	—
	Terminator	CR/LF (presence/absence selectable)	Pr. 124
Waiting time setting		Selectable between presence and absence	Pr. 123

(2) Communication procedure

上正科技有限公司
購買、維修 此手冊零組件
電話： 037-466333
Email: service@repairtw.com
Line id: @zzzz
www.repairtw.com

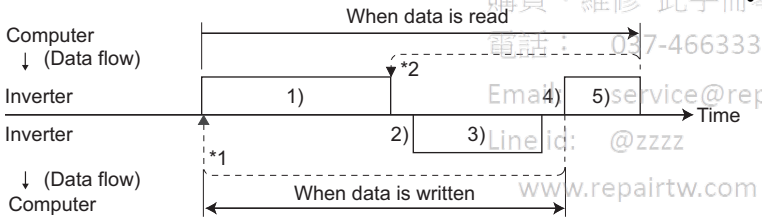

• Data communication between the computer and inverter is made in the following procedure.

1) Request data is sent from the computer to the inverter. (The inverter will not send data unless requested.)
2) After waiting for the waiting time
3) The inverter sends reply data to the computer in response to the computer request.
4) After waiting for the inverter data processing time
5) Answer from the computer in response to reply data 3) of the inverter is transmitted. (Even if 5) is not sent, subsequent communication is made properly.)

*1 If a data error is detected and a retry must be made, execute retry operation with the user program. The inverter comes to trip if the number of consecutive retries exceeds the parameter setting.

*2 On receipt of a data error occurrence, the inverter returns reply data 3) to the computer again. The inverter comes to trip if the number of consecutive data errors reaches or exceeds the parameter setting.

(3) Communication operation presence/absence and data format types

•Data communication between the computer and inverter is made in ASCII code (hexadecimal code).
•Communication operation presence/absence and data format types are as follows:

No.	Operation		Run Command	Operation Frequency	Multi command	Parameter Write	Inverter Reset	Monitor	Parameter Read
1)	Communication request is sent to the inverter in accordance with the user program in the computer.		A1	A, A2 ∗3	A3	A, A2 ∗3	A	B	B
2)	Inverter data processing time		Present	Present	Present	Present	Present	Present	Present
3)	Reply data from the inverter (Data 1) is checked for error)	No error ∗1 (Request accepted)	C	C	C1∗4	C	C ∗2	E, E1, E2, E3 ∗3	E, E2 ∗3
		With error (Request rejected)	D	D	D	D	D ∗2	D	D
4)	Computer processing delay time		10ms or more						
5)	Answer from computer in response to reply data 3). (Data 3) is checked for error)	No error ∗1 (No inverter processing)	Absent	Absent	Absent (C)	Absent	Absent	Absent (C)	Absent (C)
		With error (Inverter outputs 3) again.)	Absent	Absent	F	Absent	Absent	F	F

∗1 In the communication request data from the computer to the inverter, 10ms or more is also required after "no data error (ACK)". *(Refer to page 191)*
∗2 Reply from the inverter to the inverter reset request can be selected. *(Refer to page 195)*
∗3 When any of "0.01 to 9998" is set in *Pr. 37* and "01" in instruction code, HFF sets data format to A2 or E2. In addition, data format is always A2 and E2 for read or write of *Pr. 37*.
∗4 At mode error, and data range error, C1 data contains an error code. *(Refer to page 199)* Except for those errors, the error is returned with data format D.

•Data writing format

Communication request data from the computer to the inverter 1)

上正科技有限公司
購買、維修
電話： 037-460333
Email: service@repairtw.com
Line id: @zzzz
www.repairtw.com

Format	Number of Characters																		
	1	2	3	4	5	6	7	8	9	10	11	12	13	14	15	16	17	18	19
A	ENQ ∗1	Inverter station number ∗2		Instruction code		∗3	Data				Sum check		∗4						
A1	ENQ ∗1	Inverter station number ∗2		Instruction code		∗3	Data		Sum check		∗4								
A2	ENQ ∗1	Inverter station number ∗2		Instruction code		∗3	Data						Sum check		∗4				
A3	ENQ ∗1	Inverter station number ∗2		Instruction code		∗3	Send data type	Receive data type	Data1				Data2				Sum check		∗4

Reply data from the inverter to the computer 3) (No data error detected)

Format	Number of Characters																		
	1	2	3	4	5	6	7	8	9	10	11	12	13	14	15	16	17	18	19
C	ACK ∗1	Inverter station number ∗2		∗4															
C1	STX ∗1	Inverter station number ∗2		Send data type	Receive data type	Error code 1	Error code 2	Data1				Data2				ETX ∗1	Sum check		∗4

Reply data from the inverter to the computer 3) (With data error)

Format	Number of Characters				
	1	2	3	4	5
D	NAK ∗1	Inverter station number ∗2		Error code	∗4

∗1 Indicate a control code
∗2 Specify the inverter station numbers between H00 and H1F (stations 0 to 31) in hexadecimal.
∗3 Set waiting time. When the *Pr. 123 (waiting time setting)* is other than "9999", create the communication request data without "waiting time" in the data format. (The number of characters decreases by 1.)
∗4 CR, LF code
When data is transmitted from the computer to the inverter, codes CR (carriage return) and LF (line feed) are automatically set at the end of a data group on some computers. In this case, setting must also be made on the inverter according to the computer. Whether the CR and LF codes will be present or absent can be selected using *Pr. 124 (CR, LF selection)*.

•Data reading format

Communication request data from the computer to the inverter 1)

Format	Number of Characters								
	1	2	3	4	5	6	7	8	9
B	ENQ *1	Inverter station number *2		Instruction code		*3	Sum check		*4

Reply data from the inverter to the computer 3) (No data error detected)

Format	Number of Characters												
	1	2	3	4	5	6	7	8	9	10	11	12	13
E	STX *1	Inverter station number *2		Read data				ETX *1	Sum check		*4		
E1	STX *1	Inverter station number *2		Read data		ETX *1	Sum check		*4				
E2	STX *1	Inverter station number *2		Read data						ETX *1	Sum check		*4

Format	Number of Characters							
	1	2	3	4 to 23	24	25	26	27
E3	STX *1	Inverter station number *2		Read data (Inverter type information)	ETX *1	Sum check		*4

Reply data from the inverter to the computer 3) (With data error)

Format	Number of Characters				
	1	2	3	4	5
D	NAK *1	Inverter station number *2		Error code	*4

Send data from the computer to the inverter 5)

Format	Number of Characters			
	1	2	3	4
C (Without data error)	ACK *1	Inverter station number *2		*4
F (With data error)	NAK *1	Inverter station number *2		*4

上正科技有限公司
購買、維修 此手冊零組件
電話： 037-466333
Email: service@repairtw.com
Line id: @zzzz
www.repairtw.com

*1 Indicate a control code

*2 Specify the inverter station numbers between H00 and H1F (stations 0 to 31) in hexadecimal.

*3 Set waiting time. When the *Pr. 123 (waiting time setting)* is other than 9999, create the communication request data without "waiting time" in the data format. (The number of characters decreases by 1.)

*4 CR, LF code
When data is transmitted from the computer to the inverter, codes CR (carriage return) and LF (line feed) are automatically set at the end of a data group on some computers. In this case, setting must also be made on the inverter according to the computer. Whether the CR and LF codes will be present or absent can be selected using *Pr. 124 (CR, LF selection)*.

(4) Data definitions

1) Control code

Signal	ASCII Code	Description
STX	H02	Start of Text (Start of data)
ETX	H03	End of Text (End of data)
ENQ	H05	Enquiry (Communication request)
ACK	H06	Acknowledge (No data error detected)
LF	H0A	Line Feed
CR	H0D	Carriage Return
NAK	H15	Negative Acknowledge (Data error detected)

2) Inverter station number

Specify the station number of the inverter which communicates with the computer.

3) Instruction code

Specify the processing request, for example, operation or monitoring, given by the computer to the inverter. Hence, the inverter can be run and monitored in various ways by specifying the instruction code as appropriate. *(Refer to page 56)*

4) Data

Indicates the data such as frequency and parameters transferred to and from the inverter. The definitions and ranges of set data are determined in accordance with the instruction codes. *(Refer to page 56)*

5) Waiting time

Specify the waiting time between the receipt of data at the inverter from the computer and the transmission of reply data. Set the waiting time in accordance with the response time of the computer between 0 and 150ms in 10ms increments. (example: 1 = 10ms, 2 = 20ms).

上正科技有限公司
購買、維修 此手冊零組件
電話： 037-466333
Email: service@repairtw.com
Line id: @zzzz

REMARKS

- When the *Pr. 123 PU communication waiting time setting* setting is other than "9999", create the communication request data without "waiting time" in the data format. (The number of characters decreases by 1.)
- The data check time changes depending on the instruction code. *(Refer to page 192)*

6) Sum check code

Sum check code is 2-digit ASCII (hexadecimal) representing the lower 1 byte (8 bits) of the sum (binary) derived from the checked ASCII data.

(Example 1)

Computer → Inverter

	ENQ	Station number		Instruction code		*Waiting time	Data				Sum check code		
		0	1	E	1	1	0	7	A	D	F	4	← Binary code
ASCII Code →	H05	H30	H31	H45	H31	H31	H30	H37	H41	H44	H46	H34	

H30+H31+H45+H31+H31+H30+H37+H41+H44

=H1F4

Sum

* When the *Pr. 123 Waiting time setting* ≠ "9999", create the communication request data without "waiting time" in the data format. (The number of characters decreases by 1.)

(Example 2)

Inverter→Computer

	STX	Station number		Data read				ETX	Sum check code		
		0	1	1	7	7	0		3	0	← Binary code
ASCII Code →	H02	H30	H31	H31	H37	H37	H30	H03	H33	H30	

H30+H31+H31+H37+H37+H30

= H130

Sum

7) Error code

If any error is found in the data received by the inverter, its definition is sent back to the computer together with the NAK code.

Error Code	Error Item	Error Description	Inverter Operation
H0	Computer NAK error	The number of errors detected consecutively in communication request data from the computer is greater than allowed number of retries.	Brought to trip (E. PUE) if error occurs continuously more than the allowable number of retry times.
H1	Parity error	The parity check result does not match the specified parity	
H2	Sum check error	The sum check code in the computer does not match that of the data received by the inverter.	
H3	Protocol error	The data received by the inverter has a grammatical mistake. Alternatively, data reception is not completed within the predetermined time. CR or LF is not as set in the parameter.	
H4	Framing error	The stop bit length differs from the initial setting.	
H5	Overrun error	New data has been sent by the computer before the inverter completes receiving the preceding data.	
H6	—	—	—
H7	Character error	The character received is invalid (other than 0 to 9, A to F, control code).	Does not accept received data but is not brought to trip.
H8	—	—	—
H9	—	—	—
HA	Mode error	Parameter write was attempted in other than the computer link operation mode, when operation command source is not selected or during inverter operation.	Does not accept received data but alarm does not occur.
HB	Instruction code error	The specified command does not exist.	
HC	Data range error	Invalid data has been specified for parameter write, frequency setting, etc.	
HD	—	—	—
HE	—	—	—
HF	—	—	—

上揚科技有限公司
電話： 037-466333
Email: service@repairtw.com
Line id: @zzzz
www.repairtw.com

(5) Response time

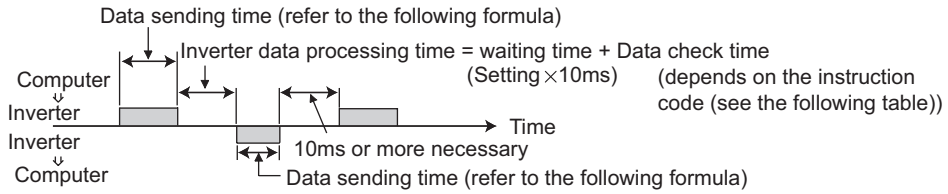

[Formula for data sending time]

$$\frac{1}{\text{Communication speed (bps)}} \times \text{Number of data characters} \times \text{Communication (Total number of bits)} = \text{data sending time (s)}$$

(Refer to page 189) *(Refer to the following.)*

●Communication specifications

Name		Number of Bits
Stop bit length		1 bits 2 bits
Data length		7 bits 8 bits
Parity check	Present	1 bits
	Absent	0

In addition to the above, 1 start bit is necessary.
Minimum number of total bits ..... 9 bits
Maximum number of total bits ..... 12 bits

●Data check time

Item	Check Time
Various monitors, operation command, frequency setting (RAM)	< 12ms
Parameter read/write, frequency setting (EEPROM)	< 30ms
Parameter clear/all clear	< 5s
Reset command	No answer

(6) Instructions for the program

1) When data from the computer has any error, the inverter does not accept that data. Hence, in the user program, always insert a retry program for data error.
2) All data communication, for example, run command or monitoring, are started when the computer gives a communication request. The inverter does not return any data without the computer's request. Hence, design the program so that the computer gives a data read request for monitoring, etc. as required.
3) Program example
   To change the operation mode to computer link operation

Programming example of Microsoft® Visual C++® (Ver.6.0)

```
#include <stdio.h>
#include <windows.h>

void main(void){
        HANDLE          hCom;           //Communication handle
        DCB             hDcb;           //Structure for communication setting
        COMMTIMEOUTS            hTim;   // Structure for time out setting

        char            szTx[0x10];             // Send buffer
        char            szRx[0x10];             // Receive buffer
        char            szCommand[0x10];// Command
        int             nTx,nRx;                // For buffer size storing
        int             nSum;                   // For sum code calculation
        BOOL            bRet;
        int             nRet;
        int             i;

        //**** Opens COM1 port****
        hCom = CreateFile ("COM1", (GENERIC_READ | GENERIC_WRITE), 0, NULL, OPEN_EXISTING, FILE_ATTRIBUTE_NORMAL, NULL);
        if (hCom != NULL) {
                //**** Makes a communication setting of COM1 port****
                GetCommState(hCom,&hDcb);                       // Retrieves current communication information
                hDcb.DCBlength = sizeof(DCB);                   // Structure size setting
                hDcb.BaudRate  = 19200;                         // Communication speed=19200bps
                hDcb.ByteSize  = 8;                             // Data length=8bit
                hDcb.Parity    = 2;                             // Even parity
                hDcb.StopBits  = 2;                             // Stop bit=2bit
                bRet = SetCommState(hCom,&hDcb);                // Sets the changed communication data
                if (bRet == TRUE) {
                        //**** Makes a time out setting of COM1 port****
                        Get CommTimeouts(hCom,&hTim);           // Obtains the current time out value
                        hTim.WriteTotalTimeoutConstant = 1000;  // Write time out 1s
                        hTim.ReadTotalTimeoutConstant  = 1000;  // Read time out 1s
                        SetCommTimeouts(hCom,&hTim);            // Changed time out value setting
                        //**** Sets the command to switch the operation mode of the station 1 inverter to the network operation mode ****
                        sprintf(szCommand,"01FB10000");         // Send data (NET operation write)
                        nTx = strlen(szCommand);                //Send data size
                        //**** Generates sum code****
                        nSum = 0;                               // Initialization of sum data
                        for (i = 0;i < nTx;i++) {
                                nSum += szCommand[i];           // Calculates sum code
                                nSum &= (0xff);                 // Masks data
                        }

                        //**** Generates send data****
                        memset(szTx,0,sizeof(szTx));            // Initialization of send buffer
                        memset(szRx,0,sizeof(szRx));            // Initialization of receive buffer
                        sprintf(szTx,"\5%s%02X",szCommand,nSum);// ENQ code+send data+sum code
                        nTx = 1 + nTx + 2;                      // Number of ENQ code+number of send data+number of sum code

                        nRet = WriteFile(hCom,szTx,nTx,&nTx,NULL);
                        //**** Sending ****
                        if(nRet != 0) {
                                nRet = ReadFile(hCom,szRx,sizeof(szRx),&nRx,NULL);
                        //**** Receiving ****
                                if(nRet != 0) {
                                        //**** Displays the receive data ****
                                        for(i = 0;i < nRx;i++) {
                                                printf("%02X ",(BYTE)szRx[i]);// Consol output of receive data
                                                // Displays ASCII coder in hexadecimal. Displays 30 when "0"
                                        }
                                        printf("\n\r");
                                }
                        }
                }
                CloseHandle(hCom);                              // Close communication port
        }
}
```

上正科技有限公司
購買、維修 此手冊零件
電話： 037-466333
Email: service@repairtw.com
Line id: @zzzz
www.repairtw.com

General flowchart

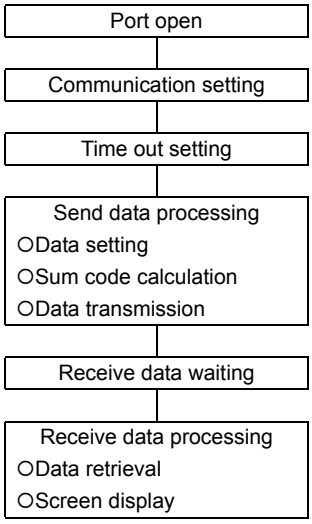

⚠ CAUTION

⚠ **Always set the communication check time interval before starting operation to prevent hazardous conditions. Data communication is not started automatically but is made only once when the computer provides a communication request. If communication is disabled during operation due to signal cable breakage etc., the inverter cannot be stopped. When the communication check time interval has elapsed, the inverter will come to trip (E.PUE, E.SER).**
The inverter can be coasted to a stop by switching on its RES signal or by switching power off.

⚠ **If communication is broken due to signal cable breakage, computer fault etc., the inverter does not detect such a fault. This should be fully noted.**

上正科技有限公司
購買、維修 此手冊零組件
電話： 037-466333
Email: service@repairtw.com
Line Id: @zzzz
www.repairtw.com

(7) Setting items and set data

After completion of parameter settings, set the instruction codes and data then start communication from the computer to allow various types of operation control and monitoring.

No.	Item		Read/ Write	Instruction Code	Data Definition	Number of Data Digits (Format)
1	Operation mode		Read	H7B	H0000: Network operation H0001: External operation H0002: PU operation	4 digits (B, E/D)
			Write	HFB		4 digits (A, C/D)
2	Monitor	Output frequency /speed	Read	H6F	H0000 to HFFFF: Output frequency in 0.01Hz increments Speed increments 1/0.001 (when *Pr. 37* = 0.01 to 9998) When "0.01 to 9998" is set in *Pr. 37* and "01" in instruction code HFF, the increments change to 0.001 and the data format is E2. When "100" is set in *Pr. 52*, the monitor value is different depending on whether the inverter is at a stop or running. *(Refer to page 128)*	4 digits (B, E/D), 6 digits (B, E2/D)
		Output current	Read	H70	H0000 to HFFFF: Output current (hexadecimal) in 0.01A increments	4 digits (B, E/D)
		Output voltage	Read	H71	H0000 to HFFFF: Output voltage (hexadecimal) in 0.1V increments	4 digits (B, E/D)
		Special monitor	Read	H72	H0000 to HFFFF: Monitor data selected in instruction code HF3 When "0.01 to 9998" is set in *Pr. 37* and "01" in instruction code HFF, the data format is E2.	4 digits (B, E/D), 6 digits (B, E2/D)
		Special monitor Selection No.	Read	H73	H01 to H40: Monitor selection data Refer to the special monitor No. table *(page 197)*	2 digits (B, E1/D)
			Write	HF3		2 digits (A1, C/D)
		Fault description	Read	H74 to H77	H0000 to HFFFF: Two latest fault definitions b15 b8b7 b0 H74: First fault in past / Latest fault H75: Third fault in past / Second fault in past H76: Fifth fault in past / Fourth fault in past H77: Seventh fault in past / Sixth fault in past Refer to the alarm data table *(page 198)*	4 digits (B, E/D)
3	Run command (expansion)		Write	HF9	Control input commands such as forward rotation signal (STF) and reverse rotation signal (STR). (For details, *refer to page 198*)	4 digits (A, C/D)
	Run command		Write	HFA		2 digits (A1, C/D)
4	Inverter status monitor (expansion)		Read	H79	Monitor the states of the output signals such as forward rotation, reverse rotation and inverter running (RUN). (For details, *refer to page 198*)	4 digits (B, E/D)
	Inverter status monitor		Read	H7A		2 digits (B, E1/D)
5	Set frequency (RAM)		Read	H6D	Read set frequency/speed from RAM or EEPROM. H0000 to HFFFF: Set frequency in 0.01Hz increments Speed increments 1/0.001 (when *Pr. 37* = 0.01 to 9998) When "0.01 to 9998" is set in *Pr. 37* and "01" in instruction code HFF, the increments change to 0.001 and the data format is E2.	4 digits (B, E/D), 6 digits (B, E2/D)
	Set frequency (EEPROM)			H6E		
	Set frequency (RAM)		Write	HED	Write set frequency/speed to RAM or EEPROM. H0000 to H9C40 (0 to 400.00Hz): Frequency increments 0.01Hz Speed increments 1/0.001 (when *Pr. 37* = 0.01 to 9998) When "0.01 to 9998" is set in *Pr. 37* and "01" in instruction code HFF, the increments change to 0.001 and the data format is A2. • To change the set frequency consecutively, write data to the inverter RAM. (instruction code: HED)	4 digits (A, C/D), 6 digits (A2, C/D)
	Set frequency (RAM, EEPROM)			HEE		

Refer to *page 189* for data format (A, A1, A2, A3, B, C, C1, D, E, E1, E2, E3)

上正科技有限公司 購買、維修 此手冊零組件 電話 Email: service@repairtw.com Line id: @zzzz www.repairtw.com

No.	Item	Read/ Write	Instruction Code	Data Definition	Number of Data Digits (Format)
6	Inverter reset	Write	HFD	H9696: Inverter reset • As the inverter is reset at start of communication by the computer, the inverter cannot send reply data back to the computer.	4 digits (A, C/D)
				H9666: Inverter reset • When data is sent normally, ACK is returned to the computer and then the inverter is reset.	4 digits (A, D)
7	Fault definition all clear	Write	HF4	H9696: Faults history all clear	4 digits (A, C/D)
8	Parameter clear All clear	Write	HFC	All parameters return to the initial values. Whether to clear communication parameters or not can be selected according to data. (○: Clear, ×: Not clear) *Refer to page 56* for parameter clear, all clear, and communication parameters. When clear is executed for H9696 or H9966, communication-related parameter settings also return to the initial values. When resuming operation, set the parameters again. Executing clear will clear the instruction code HEC, HF3, and HFF settings. During password lock, only all parameter clear is available with H9966 and H55AA.	4 digits (A, C/D)

Clear Type	Data	Communication Pr.
Parameter clear	H9696	○
	H5A5A	×
All parameter clear	H9966	○
	H55AA	×

購買、維修 此手冊零組件
電話： 037-466333
Email: service@repairtw.com
Line Id: @zzzz
www.repairtw.com

9	Parameter	Read	H00 to H63	Refer to the instruction code *(Refer to page 56)* and write and/or read parameter values as required. When setting *Pr. 100* and later, link parameter extended setting must be set. Data format of *Pr. 37* read and write is E2 and A2	4 digits (B, E/D), 6 digits (B, E2/D)
10		Write	H80 to HE3		4 digits (A, C/D), 6 digits (A2, C/D)
11	Link parameter expansion setting	Read	H7F	Parameter description is changed according to the H00 to H09 setting. For details of the settings, refer to the parameter instruction code *(Refer to page 56)*.	2 digits (B, E1/D)
		Write	HFF		2 digits (A1, C/D)
12	Second parameter changing (instruction code HFF = 1, 9)	Read	H6C	Setting calibration parameter ∗1 H00: Frequency ∗2 H01: Parameter-set analog value H02: Analog value input from terminal ∗1 Refer to the list of calibration parameters on the next page for calibration parameters. ∗2 The gain frequency can also be written using *Pr. 125* (instruction code: H99) or *Pr. 126* (instruction code: H9A).	2 digits (B, E1/D)
		Write	HEC		2 digits (A1, C/D)
13	Multi command	Write/ Read	HF0	Available for writing 2 commands, and monitoring 2 items for reading data (*Refer to page 199* for detail)	10 digits (A3, C1/D)
14	Inverter type monitor: Inverter type	Read	H7C	Reading inverter type in ASCII code. "H20" (blank code) is set for blank area Example of FR-D740 H46, H52, H2D, H44, H37, H34, H30, H20 . H20	20 digits (B, E3/D)
	Inverter type monitor: Capacity	Read	H7D	Reading inverter capacity in ASCII code. Data is read in increments of 0.1kW, and rounds down to 0.01kW increments "H20" (blank code) is set for blank area Example 0.4K ....." 4" (H20, H20, H20, H20, H20, H34) 0.75K ....." 7" (H20, H20, H20, H20, H20, H37)	6 digits (B, E2/D)

Refer to *page 189* for data format (A, A1, A2, A3, B, C, C1, D, E, E1, E2, E3)

REMARKS

- Set 65520 (HFFF0) as a parameter value "8888" and 65535 (HFFFF) as "9999".
- For the instruction codes HFF, HEC and HF3, their values are held once written but cleared to zero when an inverter reset or all clear is performed.

Example) When reading the *C3 (Pr. 902)* and *C6 (Pr. 904)* settings from the inverter of station 0

	Computer Send Data	Inverter Send Data	Description
1)	ENQ 00 FF 0 01 82	ACK 00	Set "H01" to the expansion link parameter.
2)	ENQ 00 EC 0 01 7E	ACK 00	Set "H01" to second parameter changing.
3)	ENQ 00 5E 0 0F	STX 00 0000 ETX 25	*C3 (Pr. 902)* is read. 0% is read.
4)	ENQ 00 60 0 FB	STX 00 0000 ETX 25	*C6 (Pr. 904)* is read. 0% is read.

To read/write *C3 (Pr. 902)* and *C6 (Pr. 904)* after inverter reset or parameter clear, execute from 1) again.

● List of calibration parameters

Parameter	Name	Instruction Code		
		Read	Write	Extended
C2 (902)	Terminal 2 frequency setting bias frequency	*5E*	*DE*	*1*
C3 (902)	Terminal 2 frequency setting bias	*5E*	*DE*	*1*
125 (903)	Terminal 2 frequency setting gain frequency	*5F*	*DF*	*1*
C4 (903)	Terminal 2 frequency setting gain	*5F*	*DF*	*1*
C5 (904)	Terminal 4 frequency setting bias frequency	*60*	*E0*	*1*
C6 (904)	Terminal 4 frequency setting bias	*60*	*E0*	*1*
126 (905)	Terminal 4 frequency setting gain frequency	*61*	*E1*	*1*
C7 (905)	Terminal 4 frequency setting gain	*61*	*E1*	*1*

上禹科技有限公司
購買維修說明手冊零組件
電話： 037-466333
Email: service@repairtw.com
Line id: @zzzz
www.repairtw.com

[Special monitor selection No.]

Refer to *page 128* for details of the monitor description.

Data	Description	Unit
H01	Output frequency/speed ∗1	0.01Hz/ 0.001
H02	Output current	0.01A
H03	Output voltage	0.1V
H05	Frequency setting/speed setting ∗1	0.01Hz/ 0.001
H08	Converter output voltage	0.1V
H09	Regenerative brake duty	0.1%
H0A	Electronic thermal relay function load factor	0.1%
H0B	Output current peak value	0.01A
H0C	Converter output voltage peak value	0.1V
H0E	Output power	0.01kW
H0F	Input terminal status ∗2	—

Data	Description	Unit
H10	Output terminal status ∗3	—
H14	Cumulative energization time	1h
H17	Actual operation time	1h
H18	Motor load factor	0.1%
H19	Cumulative power	1kWh
H34	PID set point	0.1%
H35	PID measured value	0.1%
H36	PID deviation	0.1%
H3D	Motor thermal load factor	0.1%
H3E	Inverter thermal load factor	0.1%
H3F	Cumulative power 2	0.01kWh
H40	PTC thermistor resistance	0.01kΩ

∗1 When "0.01 to 9998" is set in *Pr. 37* and "01" in instruction code HFF, the data format is 6 digits (E2).

∗2 Input terminal monitor details

b15															b0
—	—	—	—	—	—	—	—	—	RH	RM	RL	—	—	STR	STF

∗3 Output terminal monitor details

b15															b0
—	—	—	—	—	—	—	—	—	—	ABC	—	—	—	—	RUN

[Fault data]

Refer to *page 249* for details of fault description

Data	Definition
H00	No fault present
H10	E.OC1
H11	E.OC2
H12	E.OC3
H20	E.OV1
H21	E.OV2
H22	E.OV3
H30	E.THT

Data	Definition
H31	E.THM
H40	E.FIN
H52	E.ILF
H60	E.OLT
H70	E.BE
H80	E.GF
H81	E.LF
H90	E.OHT
H91	E.PTC

Data	Definition
HB0	E.PE
HB1	E.PUE
HB2	E.RET
HC0	E.CPU
HC4	E.CDO
HC5	E.IOH
HC7	E.AIE
HC9	E.SAF
HF5	E.5

Fault definition display example (instruction code H74)

For read data H3010
(Previous fault ..... THT)
(Latest fault...OC1)

b15							b8b7							b0
0	0	1	1	0	0	0	0	0	0	0	1	0	0	0	0

Previous fault (H30) — Latest fault (H10)

[Run command]

Item	Instruction Code	Bit Length	Description	Example
Run command	HFA	8bit	b0: AU (terminal 4 input selection) ∗2 b1: forward rotation command b2: reverse rotation command b3: RL (low-speed operation command) ∗1∗2 b4: RM (middle-speed operation command) ∗1∗2 b5: RH (high-speed operation command) ∗1∗2 b6: RT (second function selection)∗2 b7: MRS (output stop) ∗2	[Example 1] H02... Forward rotation b7 … b0: 0 0 0 0 0 0 1 0 [Example 2] H00... Stop b7 … b0: 0 0 0 0 0 0 0 0
Run command (expansion)	HF9	16bit	b0: AU (terminal 4 input selection) ∗2 b1: forward rotation command b2: reverse rotation command b3: RL (low-speed operation command) ∗1∗2 b4: RM (middle-speed operation command) ∗1∗2 b5: RH (high-speed operation command) ∗1∗2 b6: RT (second function selection)∗2 b7: MRS (output stop) ∗1∗2 b8 to b15: —	[Example 1] H0002... Forward rotation b15 … b0: 0 0 0 0 0 0 0 0 0 0 0 0 0 0 1 0 [Example 2] H0020... Low speed operation (When *Pr. 182 RH terminal function selection* is set to "0") b15 … b0: 0 0 0 0 0 0 0 0 0 0 1 0 0 0 0 0

上立科技有限公司
購買、維修 此手冊零組件
電話： 037-466333
E-mail: service@repairtw.com
Line Id: @zzzz
www.repairtw.com

∗1 The signal within parentheses is the initial setting. The description changes depending on the setting of *Pr. 180 to Pr. 182 (input terminal function selection) (page 113)*.

∗2 When *Pr. 551* = "2" (PU Mode control source is PU connector), only forward rotation and reverse rotation can be used.

[Inverter status monitor]

Item	Instruction Code	Bit Length	Description	Example
Inverter status monitor	H7A	8bit	b0: RUN (inverter running) ∗ b1: Forward rotation b2: Reverse rotation b3: SU (up-to-frequency) b4: OL (overload) b5: — b6: FU (frequency detection) b7: ABC (fault) ∗	[Example 1] H02... During forward rotation b7 … b0: 0 0 0 0 0 0 1 0 [Example 2] H80... Stop at fault occurrence b7 … b0: 1 0 0 0 0 0 0 0
Inverter status monitor (expansion)	H79	16bit	b0: RUN (inverter running) ∗ b1: Forward rotation b2: Reverse rotation b3: SU (up-to-frequency) b4: OL (overload) b5: — b6: FU (frequency detection) b7: ABC (fault) ∗ b8 to b14: — b15: Fault occurrence	[Example 1] H0002... During forward rotation b15 … b0: 0 0 0 0 0 0 0 0 0 0 0 0 0 0 1 0 [Example 2] H8080... Stop at fault occurrence b15 … b0: 1 0 0 0 0 0 0 0 1 0 0 0 0 0 0 0

∗ The signal within parentheses is the initial setting. The description changes depending on the *Pr.190, Pr. 192 (output terminal function selection)*.

[Multi command (HF0)]

Sending data format from computer to inverter

Format	Number of Characters																		
	1	2	3	4	5	6	7	8	9	10	11	12	13	14	15	16	17	18	19
A3	ENQ	Inverter station number		Instruction Code (HF0)		Waiting time	Send data type∗1	Receive data type∗2	Data1∗3				Data2 ∗3				Sum check		CR/LF

Reply data format from inverter to computer (No data error detected)

Format	Number of Characters																		
	1	2	3	4	5	6	7	8	9	10	11	12	13	14	15	16	17	18	19
C1	STX	Inverter station number		Send data type∗1	Receive data type∗2	Error code 1 ∗5	Error code 2 ∗5	Data1∗4				Data2 ∗4				ETX	Sum check		CR/LF

∗1 Specify the data type of sending data (from computer to inverter).
∗2 Specify the data type of reply data (from inverter to computer).
∗3 Combination of data 1 and data 2 for sending

Data Type	Data 1	Data 2	Remarks
0	Run command (expansion)	Set frequency (RAM)	Run command (expansion) is same as instruction code HF9 (*Refer to page 198*) The unit of set frequency is always by four digits, even when "0.01 to 9998" is set in *Pr. 37* and "01" is set in instruction code HFF.
1	Run command (expansion)	Set frequency (RAM, EEPROM)	

∗4 Combination of data 1 and data 2 for reply

Data Type	Data 1	Data 2	Remarks
0	Inverter status monitor (expansion)	Output frequency (speed)	Inverter status monitor (expansion) is same as instruction code H79 (*Refer to page 198*) The unit of speed monitor is always by four digits (rounds down after the decimal point), even when "0.01 to 9998" is set in *Pr. 37* and "01" is set in instruction code HFF. Replys the monitor item specified in instruction code HF3 for special monitor.(*Refer to page 197*)
1	Inverter status monitor (expansion)	Special monitor	

∗5 Error code for sending data 1 is set in error code 1, and error code for sending data 2 is set in error code 2.
Mode error (HA), instruction code error (HB), data range error (HC) or no error (HF) is replied.

上正科技有限公司
購買、維修 此文件僅供參考
電話: 07-6150-150
Email: service@repairtw.com
Line id: @zzzz
www.repairtw.com

4.19.6 Modbus RTU communication specifications (Pr. 117, Pr. 118, Pr. 120, Pr. 122, Pr. 343, Pr. 502, Pr. 549)

Using the Modbus RTU communication protocol, communication operation or parameter setting can be performed from the PU connector of the inverter.

Parameter Number	Name	Initial Value	Setting Range	Description
117	PU communication station number	0	0	No reply to the master *
			1 to 247	Inverter station number specification Set the inverter station numbers when two or more inverters are connected to one personal computer.
118	PU communication speed	96	48, 96, 192, 384	Communication speed The setting value × 100 equals the communication speed. Example) 9600bps if 96
120	PU communication parity check	2	0	Without parity check Stop bit length 2bit
			1	With odd parity check Stop bit length 1bit
			2	With even parity check Stop bit length 1bit
122	PU communication check time interval	0	0	RS-485 communication can be made. Note that a communication fault (E.PUE) occurs as soon as the inverter is switched to the operation mode with command source.
			0.1 to 999.8s	Communication check (signal loss detection) time interval If a no-communication state persists for longer than the permissible time, the inverter will come to trip (depends on *Pr. 502*).
			9999	No communication check (signal loss detection)
343	Communication error count	0	—	Displays the number of communication errors during Modbus-RTU communication (reading only)
502	Stop mode selection at communication error	0		**At Fault Occurrence** / **Indication** / **Fault Output** / **At Fault Removal**
			0	Coasts to stop. / E.PUE / Output / Stop (E.PUE)
			1	Decelerates to stop / After stop E.PUE / Output after stop / Stop (E.PUE)
			2	Decelerates to stop / After stop E.PUE / Without output / Automatic restart functions
549	Protocol selection	0	0	Mitsubishi inverter (computer link operation) protocol
			1	Modbus-RTU protocol

The above parameters can be set when *Pr. 160 Extended function display selection* = "0". (*Refer to page 162*)

* When Modbus-RTU communication is performed from the master with address 0 (station number 0) set, broadcast communication is selected and the inverter does not send a response message. When response from the inverter is necessary, set a value other than "0" (initial value is 0) in *Pr. 117 PU communication station number*.
Some functions are invalid for broadcast communication. (*Refer to page 203*)

上正科技有限公司
購買、維修、出租電腦設備
電話： 037-[illegible]
Email: service@repairtw.com
Line id: @zzz[illegible]
www.repairtw.com

NOTE

- **When "1" (Modbus-RTU protocol) is set in *Pr. 549* and "384" (38400bps) in *Pr. 118*, parameter unit (FR-PU04/FR-PU07) is disabled. When using the parameter unit (FR-PU04/FR-PU07), change parameter using the operation panel.**

REMARKS

- Set *Pr. 549 Protocol selection* to "1" to use the Modbus RTU protocol.
- When PU connector is selected as NET mode operation source (when *Pr. 551 PU mode operation command source selection* ≠"2"), Modbus RTU communication operation can be performed. *(Refer to page 176)*

(1) Communication specification

•The communication specifications are given below.

Item		Description	Related Parameter
Communication protocol		Modbus-RTU protocol	Pr. 549
Conforming standard		EIA-485(RS-485)	—
Number of connectable devices		1:N (maximum 32 units), setting is 0 to 247 stations	Pr. 117
Communication speed		Selected among 4800/9600/19200 and 38400bps	Pr. 118
Control procedure		Asynchronous	—
Communication method		Half-duplex	—
Communication	Character system	Binary (always 8 bits)	—
	Start bit	1bit	—
	Stop bit length	Select from the following three types •No parity, stop bit length 2 bits •No odd parity, stop bit length 1 bits •Even parity, stop bit length 1 bit	Pr. 120
	Parity check		
	Error check	CRC code check	—
	Terminator	Not used	—
Waiting time setting		Not used	—

(2) Outline

The Modbus protocol is the communication protocol developed by Modicon for PLC.

The Modbus protocol performs serial communication between the master and slave using the dedicated message frame. The dedicated message frame has the functions that can perform data read and write. Using the functions, you can read and write the parameter values from the inverter, write the input command of the inverter, and check the operating status. In this product, the inverter data are classified in the holding register area (register addresses 40001 to 49999). By accessing the assigned holding register address, the master can communicate with the inverter which is a slave.

購買、維修 此手冊零組件
電話： 07-166333
Email: service@repairtw.com
Line id: @zzzz
www.repairtw.com

REMARKS

There are two different serial transmission modes: ASCII (American Standard Code for Information Interchange) mode and RTU (Remote Terminal Unit) mode. This product supports only the RTU mode in which 1-byte (8-bit) data is transmitted as it is.
Only the communication protocol is defined by the Modbus protocol, and the physical layer is not stipulated.

(3) Message format

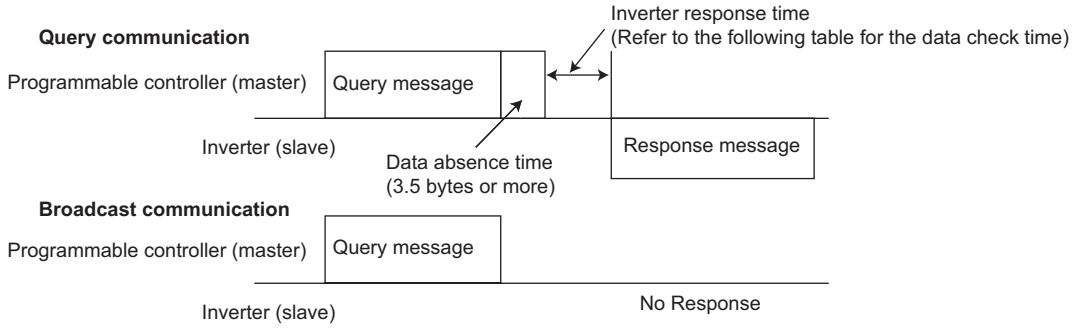

●Data check time

Item	Check Time
Various monitors, operation command, frequency setting (RAM)	<20ms
Parameter read/write, frequency setting (EEPROM)	<50ms
Parameter clear/all clear	<5s
Reset command	No answer

1) Query

The master sends a message to the slave (= inverter) at the specified address.

2) Normal Response

After receiving the query from the master, the slave executes the requested function and returns the corresponding normal response to the master.

上正科技有限公司
購買、維修 此手冊零組件
電話： 037-466333
Email: service@repairtw.com
Line id: @zzzz
www.repairtw.com

3) Error Response

If an invalid function code, address or data is received, the slave returns it to the master.

When a response description is returned, the error code indicating that the request from the master cannot be executed is added.

No response is returned for the hardware-detected error, frame error and CRC check error.

4) Broadcast

By specifying address 0, the master can send a message to all slaves. All slaves that received the message from the master execute the requested function. In this communication, the slaves do not return a response to the master.

REMARKS

The inverter performs the function independently of the inverter station number setting *(Pr. 117)* during broadcast communication.

(4) Message frame (protocol)

●Communication method

Basically, the master sends a query message (question) and the slave returns a response message (response). When communication is normal, Device Address and Function Code are copied as they are, and when communication is abnormal (function code or data code is illegal), bit 7 (= 80h) of Function Code is turned on and the error code is set to Data Bytes.

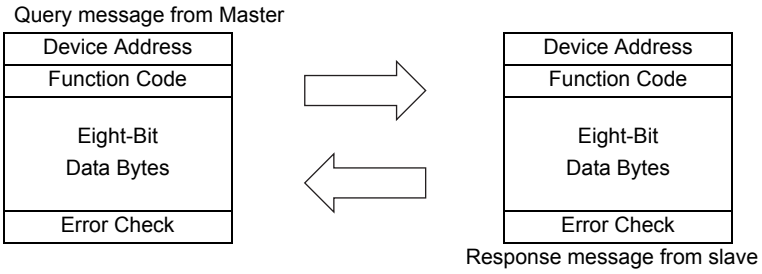

The message frame consists of the four message fields as shown above.

By adding the no-data time (T1: Start, End) of 3.5 characters to the beginning and end of the message data, the slave recognizes it as one message.

●Protocol details

The four message fields will be explained below.

Start	1) ADDRESS	2) FUNCTION	3) DATA	4) CRC CHECK		End
T1	8bit	8bit	n×8bit	L 8bit	H 8bit	T1

Message Field	Description
1) ADDRESS field	The address code is 1 byte long (8 bits) and any of 0 to 247 can be set. Set 0 to send a broadcast message (all-address instruction) or any of 1 to 247 to send a message to each slave. When the slave responds, it returns the address set from the master. The value set to *Pr. 117 PU communication station number* is the slave address.
2) FUNCTION field	The function code is 1 byte long (8 bits) and any of 1 to 255 can be set. The master sets the function that it wants to request to the slave, and the slave performs the requested operation. The following table gives the supported function codes. An error response is returned if the set function code is other than those in the following table. When the slave returns a normal response, it returns the function code set by the master. When the slave returns an error response, it returns H80 + function code.

Code	Function Name	Outline	Broadcast Communication
H03	Read Holding Register	Reads the holding register data.	Disallowed
H06	Preset Single Register	Writes data to the holding register.	Allowed
H08	Diagnostics	Function diagnosis (communication check only)	Disallowed
H10	Preset Multiple Registers	Writes data to multiple consecutive holding registers.	Allowed
H46	Read Holding Register Access Log	Reads the number of registers that succeeded in communication last time.	Disallowed

Table 1:Function code list

3) DATA field	The format changes depending on the function code *(Refer to page 204)*. Data includes the byte count, number of bytes, description of access to the holding register, etc.
4) CRC CHECK field	The received message frame is checked for error. CRC check is performed, and 2 byte long data is added to the end of the message. When CRC is added to the message, the low-order byte is added first and is followed by the high-order byte. The CRC value is calculated by the sending side that adds CRC to the message. The receiving side recalculates CRC during message receiving, and compares the result of that calculation and the actual value received in the CRC CHECK field. If these two values do not match, the result is defined as error.

上正科技有限公司
www.repairtw.com

(5) Message format types

The message formats corresponding to the function codes in Table 1 on *page 203* will be explained.

●Read holding register data (H03 or 03)

Can read the description of **1)** system environment variables, **2)** real-time monitor, **3)** faults history, and **4)** inverter parameters assigned to the holding register area (refer to the register list *(page 209)*)

Query message

1) Slave Address	2) Function	Starting Address		No. of Points		CRC Check	
(8bit)	H03 (8bit)	H (8bit)	L (8bit)	H (8bit)	L (8bit)	L (8bit)	H (8bit)

Normal response (Response message)

1) Slave Address	2) Function	Byte Count	Data			CRC Check	
(8bit)	H03 (8bit)	(8bit)	H (8bit)	L (8bit)	... (n × 16bit)	L (8bit)	H (8bit)

•Query message setting

Message	Setting Description
1) Slave Address	Address to which the message will be sent Broadcast communication cannot be made (0 is invalid).
2) Function	Set H03.
3) Starting Address	Set the address at which holding register data read will be started. Starting address = Starting register address (decimal)-40001 For example, setting of the starting address 0001 reads the data of the holding register 40002.
4) No. of Points	Number of holding registers from which data will be read The number of registers from which data can be read is a maximum of 125.

上海三菱電機
購買、維修 此手冊參照件
電話: 021-56333
Email: service@repairtw.com
Line Id: @zzzz
www.repairtw.com

•Description of normal response

Message	Setting Description
5) Byte Count	The setting range is H02 to H14 (2 to 20). Twice greater than the No. of Point specified at 4) is set.
6) Data: Read data	The number of data specified at **4)** is set. Data are read in order of Hi byte and Lo byte, and set in order of starting address data, starting address + 1 data, starting address + 2 data,

Example: To read the register values of 41004 *(Pr. 4)* to 41006 *(Pr. 6)* from the slave address 17 (H11)

Query message

Slave Address	Function	Starting Address		No. of Points		CRC Check	
H11 (8bit)	H03 (8bit)	H03 (8bit)	HEB (8bit)	H00 (8bit)	H03 (8bit)	H77 (8bit)	H2B (8bit)

Normal response (Response message)

Slave Address	Function	Byte Count	Data						CRC Check	
H11 (8bit)	H03 (8bit)	H06 (8bit)	H17 (8bit)	H70 (8bit)	H0B (8bit)	HB8 (8bit)	H03 (8bit)	HE8 (8bit)	H2C (8bit)	HE6 (8bit)

Read value

Register 41004*(Pr. 4)*: H1770 (60.00Hz)

Register 41005*(Pr. 5)*: H0BB8 (30.00Hz)

Register 41006*(Pr. 6)*: H03E8 (10.00Hz)

- **Write holding register data (H06 or 06)**

Can write the description of 1) system environment variabls and 4) inverter parameters assigned to the holding register area (refer to the register list *(page 209)*).

Query message

1) Slave Address	2) Function	3) Register Address		4) Preset Data		CRC Check	
(8bit)	H06 (8bit)	H (8bit)	L (8bit)	H (8bit)	L (8bit)	L (8bit)	H (8bit)

Normal response (Response message)

1) Slave Address	2) Function	3) Register Address		4) Preset Data		CRC Check	
(8bit)	H06 (8bit)	H (8bit)	L (8bit)	H (8bit)	L (8bit)	L (8bit)	H (8bit)

•Query message setting

Message	Setting Description
1) Slave Address	Address to which the message will be sent Setting of address 0 enables broadcast communication
2) Function	Set H06.
3) Register Address	Address of the holding register to which data will be written Register address = Holding register address (decimal)-40001 For example, setting of register address 0001 writes data to the holding register address 40002.
4) Preset Data	Data that will be written to the holding register The written data is always 2 bytes.

上正科技有限公司
購買、維修 此手冊零組件
電話： 037-466333
Line id: @zzzz
www.epa.tw.com

•Description of normal response

1) to 4) (including CRC check) of the normal response are the same as those of the query message.
No response is made for broadcast communication.

Example: To write 60Hz (H1770) to 40014 (running frequency RAM) at slave address 5 (H05).

Query message

Slave Address	Function	Register Address		Preset Data		CRC Check	
H05 (8bit)	H06 (8bit)	H00 (8bit)	H0D (8bit)	H17 (8bit)	H70 (8bit)	H17 (8bit)	H99 (8bit)

Normal response (Response message)
Same data as the query message

NOTE

For broadcast communication, no response is returned in reply to a query. Therefore, the next query must be made when the inverter processing time has elapsed after the previous query.

●Function diagnosis (H08 or 08)

A communication check can be made since the query message sent is returned unchanged as a response message (function of sub function code H00).

Sub function code H00 (Return Query Data)

Query message

1) Slave Address	2) Function	3) Subfunction		4) Date		CRC Check	
(8bit)	H08 (8bit)	H00 (8bit)	H00 (8bit)	H (8bit)	L (8bit)	L (8bit)	H (8bit)

Normal response (Response message)

1) Slave Address	2) Function	3) Subfunction		4) Date		CRC Check	
(8bit)	H08 (8bit)	H00 (8bit)	H00 (8bit)	H (8bit)	L (8bit)	L (8bit)	H (8bit)

•Query message setting

Message	Setting Description
1) Slave Address	Address to which the message will be sent Broadcast communication cannot be made (0 is invalid).
2) Function	Set H08.
3) Subfunction	Set H0000.
4) Data	Any data can be set if it is 2 bytes long. The setting range is H0000 to HFFFF

• Description of normal response

1) to 4) (including CRC check) of the normal response are the same as those of the query message.

NOTE

For broadcast communication, no response is returned in reply to a query. Therefore, the next query must be made when the inverter processing time has elapsed after the previous query.

上可科技有限公司
購買、維修 此手冊零組件
電話: 037-466333
Email: service@repairtw.com
Line id: @zzzz
www.repairtw.com

● Write multiple holding register data (H10 or 16)

You can write data to multiple holding registers.

Query message

1)Slave Address	2) Function	3) Starting Address		4) No. of Registers		5) ByteCount	6) Data			CRC Check	
(8bit)	H10 (8bit)	H (8bit)	L (8bit)	H (8bit)	L (8bit)	(8bit)	H (8bit)	L (8bit)	... (n×2×8bit)	L (8bit)	H (8bit)

Normal response (Response message)

1)Slave Address	2)Function	3)Starting Address		4)No. of Registers		CRC Check	
(8bit)	H10 (8bit)	H (8bit)	L (8bit)	H (8bit)	L (8bit)	L (8bit)	H (8bit)

• Query message setting

Message	Setting Description
1) Slave Address	Address to which the message will be sent Setting of address 0 enables broadcast communication
2) Function	Set H10.
3) Starting Address	Address where holding register data write will be started Starting address = Starting register address (decimal)-40001 For example, setting of the starting address 0001 reads the data of the holding register 40002.
4) No. of Points	Number of holding registers where data will be written The number of registers where data can be written is a maximum of 125.
5) Byte Count	The setting range is H02 to HFA (0 to 250). Set a value twice greater than the value specified at 4).
6) Data	Set the data specified by the number specified at 4). The written data are set in order of Hi byte and Lo byte, and arranged in order of the starting address data, starting address + 1 data, starting address + 2 data

• **Description of normal response**

1) to 4) (including CRC check) of the normal response are the same as those of the query message.

Example: To write 0.5s (H05) to 41007 *(Pr. 7)* at the slave address 25 (H19) and 1s (H0A) to 41008 *(Pr.8)*.

Query message

Slave Address	Function	Starting Address		No. of Points		Byte Count	Data				CRC Check	
H19 (8bit)	H10 (8bit)	H03 (8bit)	HEE (8bit)	H00 (8bit)	H02 (8bit)	H04 (8bit)	H00 (8bit)	H05 (8bit)	H00 (8bit)	H0A (8bit)	H86 (8bit)	H3D (8bit)

Normal response (Response message)

Slave Address	Function	Starting Address		No. of Points		CRC Check	
H19 (8bit)	H10 (8bit)	H03 (8bit)	HEE (8bit)	H00 (8bit)	H02 (8bit)	H22 (8bit)	H61 (8bit)

● **Read holding register access log (H46 or 70)**

A response can be made to a query made by the function code H03 or H10.

The starting address of the holding registers that succeeded in access during previous communication and the number of successful registers are returned.

In response to the query for other than the above function code, 0 is returned for the address and number of registers.

Query message

1) Slave Address	2) Function	CRC Check	
(8bit)	H46 (8bit)	L (8bit)	H (8bit)

上正科技有限公司
購買、維修 此手冊零組件
電話： 037-466333
Email: service@repairtw.com
Line id: @xxz
www.repairtw.com

Normal response (Response message)

1) Slave Address	2) Function	3) Starting Address		4) No. of Points		CRC Check	
(8bit)	H46 (8bit)	H (8bit)	L (8bit)	H (8bit)	L (8bit)	L (8bit)	H (8bit)

• **Query message setting**

Message	Setting Description
1) Slave Address	Address to which the message will be sent Broadcast communication cannot be made (0 is invalid).
2) Function	Set H46.

• **Description of normal response**

Message	Setting Description
3) Starting Address	The starting address of the holding registers that succeeded in access is returned. Starting address = Starting register address (decimal)-40001 For example, when the starting address 0001 is returned, the address of the holding register that succeeded in access is 40002.
4) No. of Points	The number of holding registers that succeeded in access is returned.

Example: To read the successful register starting address and successful count from the slave address 25 (H19).

Query message

Slave Address	Function	CRC Check	
H19 (8bit)	H46 (8bit)	H8B (8bit)	HD2 (8bit)

Normal response (Response message)

Slave Address	Function	Starting Address		No. of Points		CRC Check	
H19 (8bit)	H10 (8bit)	H03 (8bit)	HEE (8bit)	H00 (8bit)	H02 (8bit)	H22 (8bit)	H61 (8bit)

Success of two registers at starting address 41007 *(Pr. 7)* is returned.

- **Error response**

An error response is returned if the query message received from the master has an illegal function, address or data. No response is returned for a parity, CRC, overrun, framing or busy error.

NOTE

No response message is sent in the case of broadcast communication also.

Error response (Response message)

1) Slave Address	2) Function	3) Exception Code	CRC Check	
(8bit)	H80 + Function (8bit)	(8bit)	L (8bit)	H (8bit)

Message	Setting Description
1) Slave Address	Address received from the master
2) Function	Master-requested function code + H80
3) Exception Code	Code in the following table

Error code list

Code	Error Item	Error Description
01	ILLEGAL FUNCTION	The set function code in the query message from the master cannot be handled by the slave.
02	ILLEGAL DATA ADDRESS *1	The set register address in the query message from the master cannot be handled by the inverter. (No parameter, parameter read disabled, parameter write disabled)
03	ILLEGAL DATA VALUE	The set data in the query message from the master cannot be handled by the inverter. (Out of parameter write range, mode specified, other error)

上河科技有限公司
購買、維修、此手機零組件
電話： 037-466333
Email: service@repairtw.com
台灣地址：苗栗縣
www.repairtw.com

*1 An error will not occur in the following cases.
1) Function code H03 (Read holding register data)
When the No. of Points is 1 or more and there is one or more holding registers from which data can be read
2) Function code H10 (Write multiple holding register data)
When the No. of Points is 1 or more and there is 1 or more holding registers to which data can be written
Namely, when the function code H03 or H10 is used to access multiple holding registers, an error will not occur if a non-existing holding register or read disabled or write disabled holding register is accessed.

REMARKS

An error will occur if all accessed holding registers do not exist.
Data read from a non-existing holding register is 0, and data written there is invalid.

- **Message data mistake detection**

To detect the mistakes of message data from the master, they are checked for the following errors.
If an error is detected, a trip will not occur.

Error check item

Error Item	Error Description	Inverter Operation
Parity error	The data received by the inverter differs from the specified parity (*Pr.120* setting).	1) *Pr.343* is increased by 1 at error occurrence. 2)The terminal LF is output at error occurrence.
Framing error	The data received by the inverter differs from the specified stop bit length *(Pr.120)*.	
Overrun error	The following data was sent from the master before the inverter completes data receiving.	
Message frame error	The message frame data length is checked, and the received data length of less than 4 bytes is regarded as an error.	
CRC check error	A mismatch found by CRC check between the message frame data and calculation result is regarded as an error.	

(6) Modbus registers

- System environment variable

Register	Definition	Read/write	Remarks
40002	Inverter reset	Write	Any value can be written
40003	Parameter clear	Write	Set H965A as a written value.
40004	All parameter clear	Write	Set H99AA as a written value.
40006	Parameter clear ∗1	Write	Set H5A96 as a written value.
40007	All parameter clear ∗1	Write	Set HAA99 as a written value.
40009	Inverter status/control input instruction∗2	Read/write	See below.
40010	Operation mode/inverter setting ∗3	Read/write	See below.
40014	Running frequency (RAM value)	Read/write	According to the *Pr. 37* settings, the frequency and selectable speed are in 1r/min increments.
40015	Running frequency (EEPROM value)	Write	

∗1 The communication parameter values are not cleared.
∗2 For write, set the data as a control input instruction.
For read, data is read as an inverter operating status.
∗3 For write, set data as the operation mode setting.
For read, data is read as the operation mode status.

<Inverter status/control input instruction>

Bit	Definition	
	Control input instruction	Inverter status
0	Stop command	RUN (inverter running) ∗2
1	Forward rotation command	Forward rotation
2	Reverse rotation command	During reverse rotation
3	RH (high-speed operation command)∗1	SU (up-to-frequency)
4	RM (middle-speed operation command)∗1	OL (overload)
5	RL (low-speed operation command)∗1	0
6	0	FU (frequency detection)
7	RT (second function selection)	ABC (fault) ∗2
8	AU (terminal 4 input selection)	0
9	0	0
10	MRS (output stop)	0
11	0	0
12	0	0
13	0	0
14	0	0
15	0	Fault occurrence

<Operation mode/inverter setting>

Mode	Read Value	Written Value
EXT	H0000	H0010
PU	H0001	—
EXT JOG	H0002	—
NET	H0004	H0014
PU+EXT	H0005	—

The restrictions depending on the operation mode changes according to the computer link specifications.

上千萬種電子元件
購買、維修、跟手備零組件
電話： 037-456333
Email: service@repairtw.com
Line Id: @zzzz
www.repairtw.com

∗1 The signal within parentheses is the initial setting. Definitions change according to the *Pr. 180 to Pr. 182 (input terminal function selection) (refer to page 113)*.
Each assigned signal is valid or invalid depending on NET. *(Refer to page 176)*
∗2 The signal within parentheses is the initial setting. Definitions change according to the *Pr. 190, Pr. 192 (output terminal function selection) (refer to page119)*.

- Real time monitor

Refer to *page 128 for details of the monitor description*.

Register	Description	Unit
40201	Output frequency/speed	0.01Hz/1 ∗1
40202	Output current	0.01A
40203	Output voltage	0.1V
40205	Output frequency setting/speed setting	0.01Hz/1 ∗1
40208	Converter output voltage	0.1V
40209	Regenerative brake duty	0.1%
40210	Electronic thermal relay function load factor	0.1%
40211	Output current peak value	0.01A
40212	Converter output voltage peak value	0.1V
40214	Output power	0.01kW
40215	Input terminal status ∗2	—

Register	Description	Unit
40216	Output terminal status ∗3	—
40220	Cumulative energization time	1h
40223	Actual operation time	1h
40224	Motor load factor	0.1%
40225	Cumulative power	1kWh
40252	PID set point	0.1%
40253	PID measured value	0.1%
40254	PID deviation	0.1%
40261	Motor thermal load factor	0.1%
40262	Inverter thermal load factor	0.1%
40263	Cumulative power 2	0.01kWh
40264	PTC thermistor resistance	0.01kΩ

∗1 When *Pr.37* = "0.01 to 9998", displayed in integral number.
∗2 Input terminal monitor details

b15															b0
—	—	—	—	—	—	—	—	—	RH	RM	RL	—	—	STR	STF

∗3 Output terminal monitor details

b15															b0
—	—	—	—	—	—	—	—	—	—	ABC	—	—	—	—	RUN

- Parameter

Parameter	Register	Parameter Name	Read/ Write	Remarks
0 to 999	41000 to 41999	Refer to the parameter list *(page 56)* for the parameter names.	Read/write	The parameter number + 41000 is the register number.
C2(902)	41902	Terminal 2 frequency setting bias frequency	Read/write	
C3(902)	42092	Terminal 2 frequency setting bias (Analog value)	Read/write	The analog value (%) set to *C3 (902)* is read.
	43902	Terminal 2 frequency setting bias (Terminal analog value)	Read	The analog value (%) of the voltage (current) applied to the terminal 2 is read.
125(903)	41903	Terminal 2 frequency setting gain frequency	Read/write	
C4(903)	42093	Terminal 2 frequency setting gain (Analog value)	Read/write	The analog value (%) set to *C4 (903)* is read.
	43903	Terminal 2 frequency setting gain (Terminal analog value)	Read	The analog value (%) of the voltage (current) applied to the terminal 2 is read.
C5(904)	41904	Terminal 4 frequency setting bias frequency	Read/write	
C6(904)	42094	Terminal 4 frequency setting bias (Analog value)	Read/write	The analog value (%) set to *C6 (904)* is read.
	43904	Terminal 4 frequency setting bias (Terminal analog value)	Read	The analog value (%) of the current (voltage) applied to the terminal 4 is read.
126(905)	41905	Terminal 4 frequency setting gain frequency	Read/write	
C7(905)	42095	Terminal 4 frequency setting gain (Analog value)	Read/write	The analog value (%) set to *C7 (905)* is read.
	43905	Terminal 4 frequency setting gain (Terminal analog value)	Read	The analog value (%) of the current (voltage) applied to the terminal 4 is read.

上誠科技有限公司
購買、維修 此手冊零組件
電話： 037-466333
Email: service@repairtw.com
Line id: @zzzz
www.repairtw.com

- Faults history

Register	Definition	Read/write	Remarks
40501	Fault history 1	Read/write	Being 2 bytes in length, the data is stored as "H00○○". Refer to the lowest 1 byte for the error code. Performing write using the register 40501 batch-clears the faults history. Set any value as data.
40502	Fault history 2	Read	
40503	Fault history 3	Read	
40504	Fault history 4	Read	
40505	Fault history 5	Read	
40506	Fault history 6	Read	
40507	Fault history 7	Read	
40508	Fault history 8	Read	

Fault code list

Data	Definition
H00	No fault present
H10	E.OC1
H11	E.OC2
H12	E.OC3
H20	E.OV1
H21	E.OV2
H22	E.OV3
H30	E.THT

Data	Definition
H31	E.THM
H40	E.FIN
H52	E.ILF
H60	E.OLT
H70	E.BE
H80	E.GF
H81	E.LF
H90	E.OHT
H91	E.PTC

Data	Definition
HB0	E.PE
HB1	E.PUE
HB2	E.RET
HC0	E.CPU
HC4	E.CDO
HC5	E.IOH
HC7	E.AIE
HF5	E.5

* *Refer to page 249 for details of fault definition.*

(7) *Pr. 343 Communication error count*

You can check the cumulative number of communication errors.

Parameter	Setting Range	Minimum Setting Range	Initial Value
343	(Reading only)	1	0

NOTE

The number of communication errors is temporarily stored into the RAM. As it is not stored into the EEPROM performing a power supply reset or inverter reset clears the value to 0.

(8) Output terminal LF "alarm output (communication error warnings)"

During a communication error, the alarm signal (LF signal) is output by open collector output. Assign the used terminal using *Pr. 190 or Pr. 192 (output terminal function selection)*.

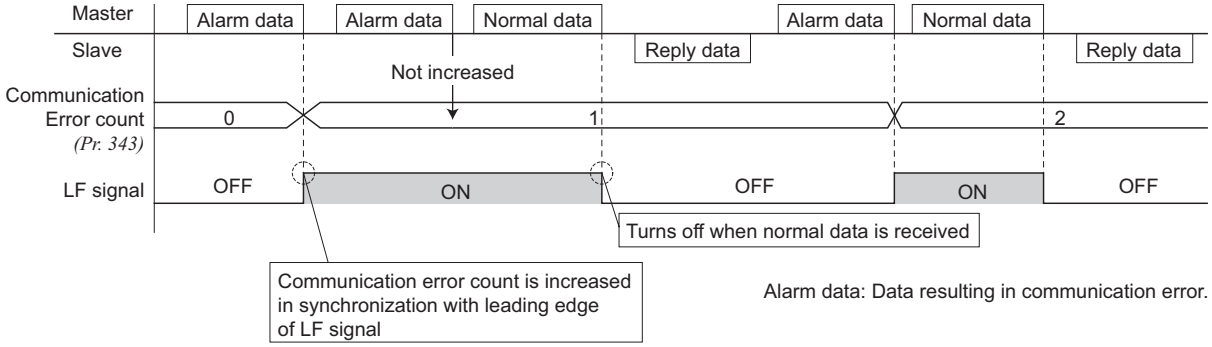

NOTE

The LF signal can be assigned to the output terminal using *Pr. 190 or Pr. 192*. Changing the terminal assignment may affect the other functions. Make setting after confirming the function of each terminal.

上正科技有限公司
購買、維修 此手冊零組件
電話： 037-466333
Email: service@repairtw.com
Line id: @zzzz
www.repairtw.com

4.20 Special operation and frequency control

Purpose	Parameter that should be Set		Refer to Page
Perform process control such as pump and air volume.	**PID control**	**Pr. 127 to Pr. 134, Pr. 575 to Pr. 577**	*212*
Dancer control	**PID control (dancer control setting)**	**Pr. 44, Pr. 45, Pr. 128 to Pr. 134**	*220*
Avoid overvoltage alarm due to regeneration by automatic adjustment of output frequency	**Regeneration avoidance function**	**Pr. 882, Pr. 883, Pr. 885, Pr. 886**	*226*

4.20.1 PID control (Pr. 127 to Pr. 134, Pr. 575 to Pr. 577)

The inverter can be used to exercise process control, e.g. flow rate, air volume or pressure.
The terminal 2 input signal or parameter setting is used as a set point and the terminal 4 input signal used as a feedback value to constitute a feedback system for PID control.

Parameter Number	Name	Initial Value	Setting Range	Description		
127	**PID control automatic switchover frequency**	9999	0 to 400Hz	Frequency at which the control is automatically changed to PID control.		
			9999	Without PID automatic switchover function		
128	**PID action selection**	0	0	PID action is not performed		
			20	PID reverse action	Measured value (terminal 4)	
			21	PID forward action	Set value (terminal 2 or *Pr. 133*)	
			40	PID reverse action	Addition method: fixed	For dancer control set point *(Pr. 133)*, measured value (terminal 4) main speed (frequency command of the operation mode)
			41	PID forward action		
			42	PID reverse action	Addition method: ratio	
			43	PID forward action		
129 ∗1	**PID proportional band**	100%	0.1 to 1000%	If the proportional band is narrow (parameter setting is small), the manipulated variable varies greatly with a slight change of the measured value. Hence, as the proportional band narrows, the response sensitivity (gain) improves but the stability deteriorates, for example, hunting occurs. Gain Kp= 1/proportional band		
			9999	No proportional control		
130 ∗1	**PID integral time**	1s	0.1 to 3600s	For deviation step input, time (Ti) required for only the integral (I) action to provide the same manipulated variable as that for the proportional (P) action. As the integral time decreases, the set point is reached earlier but hunting occurs more easily.		
			9999	No integral control.		
131	**PID upper limit**	9999	0 to 100%	Maximum value If the feedback value exceeds the setting, the FUP signal is output. The maximum input (20mA/5V/10V) of the measured value (terminal 4) is equivalent to 100%.		
			9999	No function		
132	**PID lower limit**	9999	0 to 100%	Minimum frequency If the process value falls below the setting range, the FDN signal is output. The maximum input (20mA/5V/10V) of the measured value (terminal 4) is equivalent to 100%.		
			9999	No function		
133 ∗1	**PID action set point**	9999	0 to 100%	Used to set the set point for PID control.		
			9999	Terminal 2 input is the set point.		
134 ∗1	**PID differential time**	9999	0.01 to 10s	For deviation ramp input, time (Td) is required for providing only the manipulated variable for the proportional (P) action. As the differential time increases, greater response is made to a deviation change.		
			9999	No differential control.		
575	**Output interruption detection time**	1s	0 to 3600s	The inverter stops operation if the output frequency after PID operation remains at less than the *Pr. 576* setting for longer than the time set in *Pr. 575*.		
			9999	Without output interruption function		
576	**Output interruption detection level**	0Hz	0 to 400Hz	Set the frequency at which the output interruption processing is performed.		

上正科技有限公司
購買、維修工業手機零組件
電話： 07-162320
Email: service@repairtw.com
Line id: @repairtw
www.repairtw.com

Parameter Number	Name	Initial Value	Setting Range	Description
577	Output interruption cancel level	1000%	900 to 1100%	Set the level (*Pr. 577* minus 1000%) at which the PID output interruption function is canceled.

The above parameters can be set when *Pr. 160 Extended function display selection* ="0". *(Refer to page 162)*

*1 *Pr. 129, Pr. 130, Pr. 133 and Pr. 134* can be set during operation. They can also be set independently of the operation mode.

(1) PID control basic configuration

•*Pr. 128* = "20, 21" (measured value input)

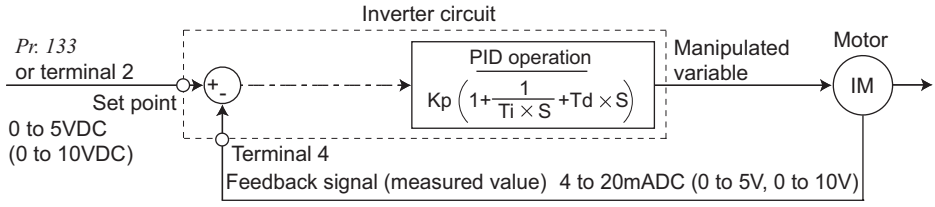

Kp: Proportionality constant Ti: Integral time S: Operator Td: Differential time

(2) PID action overview

1)PI action

A combination of proportional control action (P) and integral control action (I) for providing a manipulated variable in response to deviation and changes with time.

[Operation example for stepped changes of process value]

(Note) PI action is the sum of P and I actions.

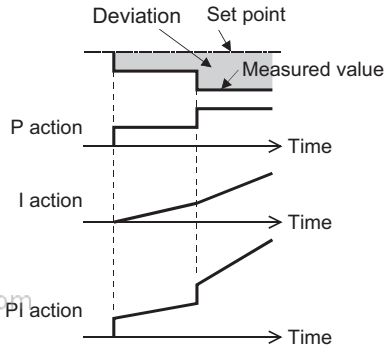

上正科技有限公司
購買、維修 此手冊零組件
電話： 037-466333
Email: service@repairtw.com
Line id: @zzzz
www.repairtw.com

2)PD action

A combination of proportional control action (P) and differential control action (D) for providing a manipulated variable in response to deviation speed to improve the transient characteristic.

[Operation example for proportional changes of process value]

(Note) PD action is the sum of P and D actions.

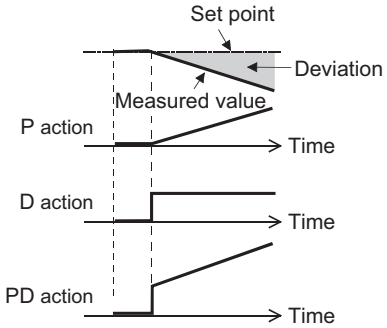

3)PID action

The PI action and PD action are combined to utilize the advantages of both actions for control.

(Note) PID action is the sum of P, I and D actions.

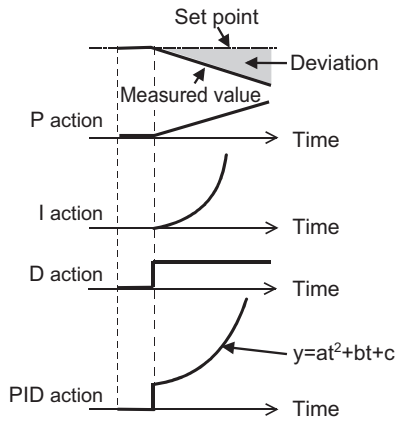

4)Reverse operation

Increases the manipulated variable (output frequency) if deviation X = (set point - measured value) is positive, and decreases the manipulated variable if deviation is negative.

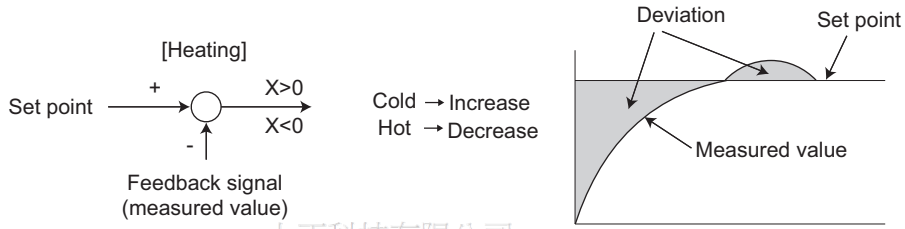

上正科技有限公司
購買、維修、供手冊零組件
電話：037-466333
Email: service@repairtw.com
Line id: @zzzz
www.repairtw.com

5)Forward action

Increases the manipulated variable (output frequency) if deviation X = (set point - measured value) is negative, and decreases the manipulated variable if deviation is positive.

Relationships between deviation and manipulated variable (output frequency)

	Deviation	
	Positive	Negative
Reverse action	↗	↘
Forward action	↘	↗

(3) Connection diagram

- Sink logic
- *Pr. 128* = 20
- *Pr. 182* = 14
- *Pr. 190* = 15
- *Pr. 192* = 16

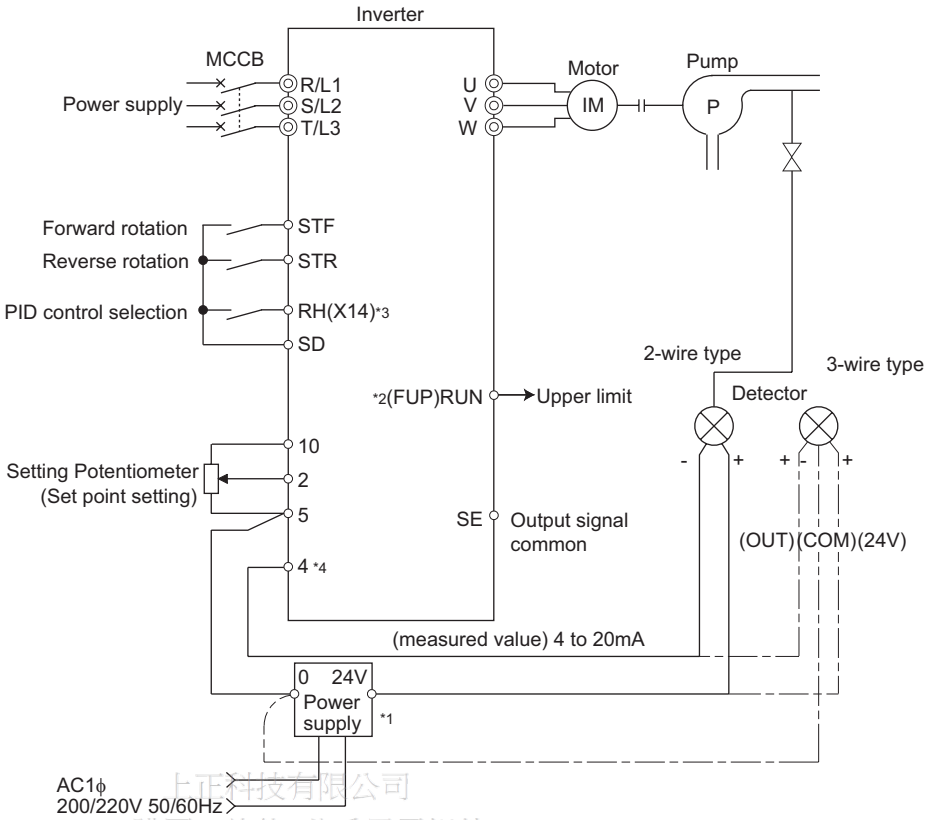

*1 The power supply must be selected in accordance with the power specifications of the detector used.

*2 The used output signal terminal changes depending on the *Pr. 190, Pr. 192 (output terminal selection)* setting.

*3 The used input signal terminal changes depending on the *Pr. 178 to Pr. 182 (input terminal selection)* setting.

*4 The AU signal need not be input.

上正科技有限公司
購買、維修、供手冊零組件
電話: 03-3319393
Email: service@repairtw.com
Line id: @zzzz
www.repairtw.com

(4) I/O signals and parameter setting

- Set "20, 21" in *Pr. 128* to perform PID operation.
- Set "14" in any of *Pr. 178 to Pr. 182 (input terminal function selection)* to assign PID control selection signal (X14) to turn the X14 signal on.
  When the X14 signal is not assigned, only the *Pr. 128* setting makes PID control valid.
- Enter the set point using the inverter terminal 2 or *Pr. 133* and enter the measured value to terminal 4.

REMARKS

- When *Pr. 128* = "0" or X14 signal is off, normal inverter operation is performed without PID action.
- Turning ON/OFF of bit of the terminal, to which X14 signal is assigned through network as RS-485 communication, enables PID control.

Signal		Terminal Used	Function	Description	Parameter Setting
Input	X14	Depending on *Pr. 178 to Pr. 182*	PID control selection	Turn on X14 signal to perform PID control. ∗1	Set 14 in any of *Pr. 178* to *Pr. 182*.
	2	2	Set point input	You can input the set point for PID control.∗4	*Pr. 128* = 20, 21, *Pr. 133* = 9999
				0 to 5V.....0 to 100%	*Pr. 73* = 1 ∗2, 11
				0 to 10V.....0 to 100%	*Pr. 73* = 0, 10
	PU	—	Set point input	Set the set point *(Pr. 133)* from the operation panel.	*Pr. 128* = 20, 21 *Pr. 133* = 0 to 100%
	4	4	Measured value input	Input the signal from the detector (measured value signal).	*Pr. 128* = 20, 21
				4 to 20mA.....0 to 100%	*Pr. 267* = 0 ∗2
				0 to 5V.....0 to 100%	*Pr. 267* = 1
				0 to 10V.....0 to 100%	*Pr. 267* = 2
Output	FUP	Depending on *Pr. 190, Pr. 192*	Upper limit output	Output to indicate that the process value signal exceeded the maximum value *(Pr. 131)*.	*Pr. 128* = 20, 21 *Pr. 131* ≠ 9999 Set 15 or 115 in *Pr. 190* or *Pr. 192* ∗3
	FDN		Lower limit output	Output when the process value signal falls below the minimum value *(Pr. 132)*.	*Pr. 128* = 20, 21 *Pr. 132* ≠ 9999 Set 14 or 114 in *Pr. 190* or *Pr. 192*. ∗3
	RL		Forward (reverse) rotation direction output	"Hi" is output to indicate that the output indication of the parameter unit is forward rotation (FWD) or "Low" to indicate that it is reverse rotation (REV) or stop (STOP).	Set 16 or 116 in *Pr. 190* or *Pr. 192*. ∗3
	PID		During PID control activated	Turns ON during PID control.	Set 47 or 147 in *Pr. 190* or *Pr. 192*. ∗3
	SLEEP		PID output interruption	Turns ON when the PID output interruption function is performed.	*Pr. 575* ≠9999 Set 70 or 170 in *Pr. 190* or *Pr.192*. ∗3
	SE	SE	Output terminal common	Common terminal for open collector output terminal.	

∗1 When the X14 signal is not assigned, only the *Pr. 128* setting makes PID control valid.
∗2 The shaded area indicates the parameter initial value.
∗3 When 100 or larger value is set in any of *Pr.190, Pr.192 (output terminal function selection)*, the terminal output has negative logic. *(Refer to page 119 for details)*
∗4 When *Pr. 561 PTC thermistor protection level* ≠"9999", terminal 2 is not available for set point input. Use *Pr. 133* for set point input.

NOTE

- **Changing the terminal function using any of *Pr. 178 to Pr. 182 and Pr. 190, Pr. 192* may affect the other functions. Make setting after confirming the function of each terminal.**
- **When the *Pr. 267* setting was changed, check the voltage/current input switch setting. Different setting may cause a fault, failure or malfunction. (*Refer to page 150* for setting)**

上正科技有限公司
購買、維修、快手加零組件
電話： 03-466333
Email: service@repairtw.com
Line id: @ctr
www.repairtw.com

(5) PID automatic switchover control *(Pr. 127)*

- The system can be started up without PID control only at a start.
- When the frequency is set to *Pr. 127 PID control automatic switchover frequency* within the range 0 to 400Hz, the inverter starts up without PID control from a start until output frequency is reached to the set frequency of *Pr. 127*, and then it shifts to PID control. Once the system has entered PID control operation, it continues PID control even if the output ferquency falls to or below *Pr.127*.

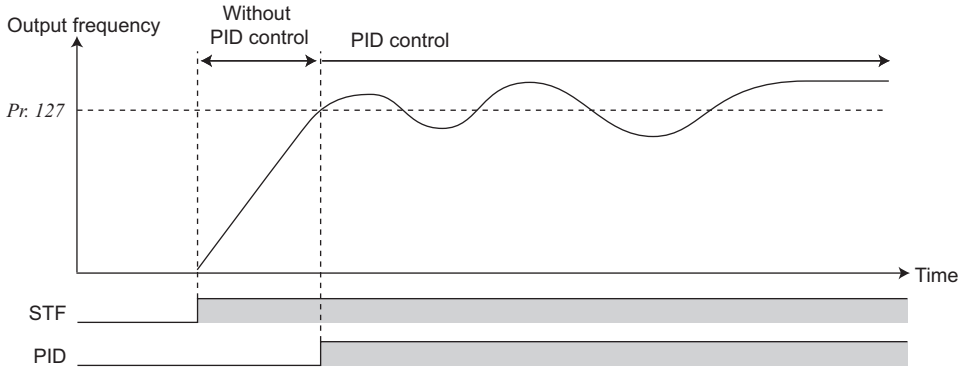

(6) PID output suspension function (SLEEP function) (SLEEP signal, *Pr. 575 to Pr. 577*)

- The inverter stops operation if the output frequency after PID operation remains at less than the *Pr. 576 Output interruption detection level* setting for longer than the time set in *Pr. 575 Output interruption detection time*. This function can reduce energy consumption in the low-efficiency, low-speed range.
- When the deviation (= set value - measured value) reaches the PID output shutoff cancel level (*Pr. 577* setting -1000%) while the PID output interruption function is on, the PID output interruption function is canceled and PID control operation is resumed automatically.
- While the PID output interruption function is on, the PID output interruption signal (SLEEP) is output. At this time, the inverter running signal (RUN) is OFF, and the PID control operating signal (PID) is ON.
- For the terminal used for the SLEEP signal output, assign the function by setting "70" (positive logic) or "170" (negative logic) in *Pr. 190 or Pr. 192 (output terminal function selection)*.

上正科技有限公司
購買、維修、出手四零組件
電話: 0917165338
Email: service@repairtw.com
Line id: @zzzz
www.repairtw.com

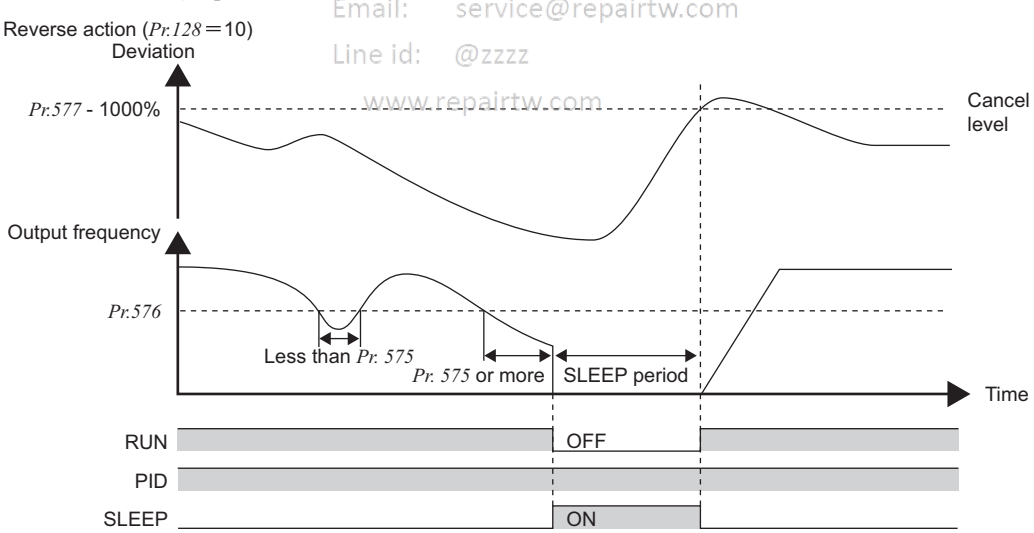

(7) PID monitor function

- The PID control set point, measured value and deviation value can be displayed on the operation panel and output from terminal AM.
- The deviation monitor displays a negative value on the assumption that 1000 is 0%. (The deviation monitor cannot be output from the terminal AM.)
- For each monitor, set the following value in *Pr. 52 DU/PU main display data selection* and *Pr. 158 AM terminal function selection*.

Setting	Monitor Description	Minimum Increments	Terminal AM Full Scale	Remarks
52	**PID set point**	0.1%	100%	—
53	**PID measured value**	0.1%	100%	
54	**PID deviation**	0.1%	—	Value cannot be set to *Pr. 158*. Displays 1000 when the PID deviation is 0%.

(8) Adjustment procedure

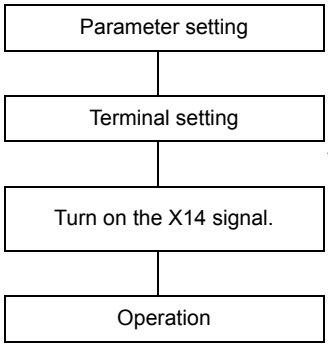

Adjust the PID control parameters, *Pr. 127* to *Pr. 134*.

Set the I/O terminals for PID control (*Pr. 178* to *Pr. 182 (input terminal function selection), Pr. 190* , *Pr. 192 (output terminal function selection)*)

When X14 signal is not assigned, setting a value other than "0" in *Pr. 128* activates PID operation.

(9) Calibration example

(A detector of 4mA at 0°C (32°F) and 20mA at 50°C (122°F) is used to adjust the room temperature to 25°C (77°F) under PID control.
The set point is given to across inverter terminals 2-5 (0 to 5V).)

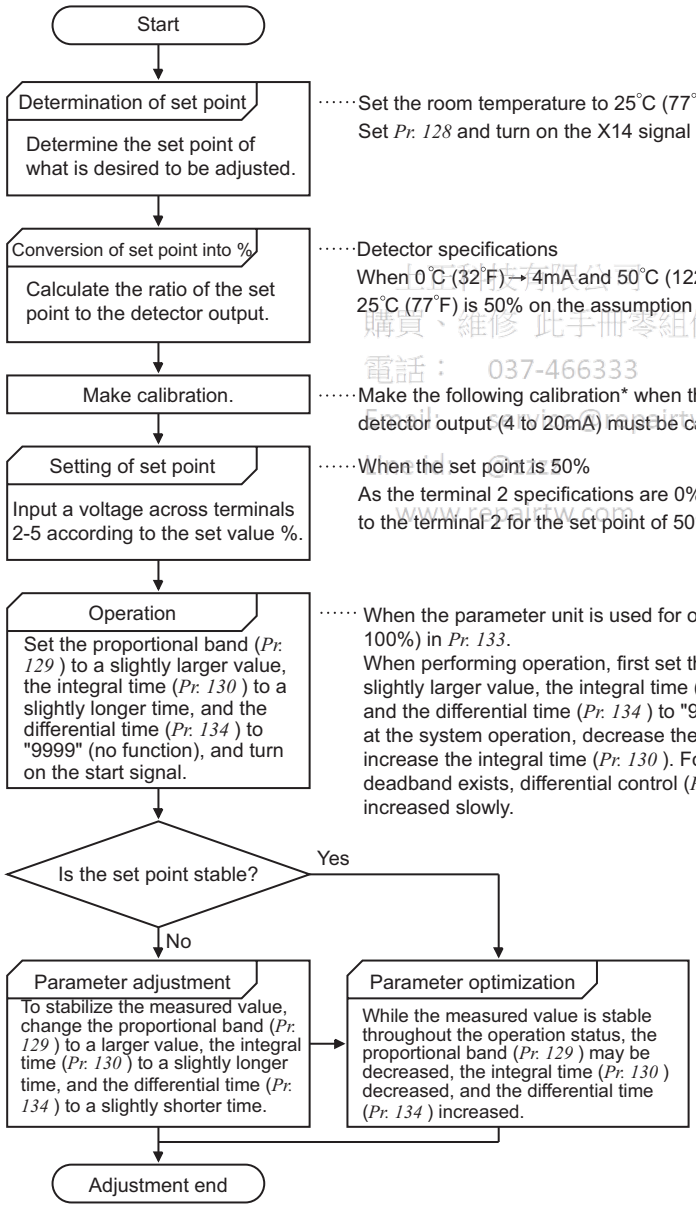

……Set the room temperature to 25°C (77°F) .
Set *Pr. 128* and turn on the X14 signal to enable PID control.

……Detector specifications
When 0°C (32°F) → 4mA and 50°C (122°F) → 20mA are used, the set point 25°C (77°F) is 50% on the assumption that 4mA is 0% and 20mA is 100%.

……Make the following calibration* when the target setting input (0 to 5V) and detector output (4 to 20mA) must be calibrated.

……When the set point is 50%
As the terminal 2 specifications are 0% → 0V and 100% → 5V, input 2.5V to the terminal 2 for the set point of 50%.

…… When the parameter unit is used for operation, input the set point (0 to 100%) in *Pr. 133*.
When performing operation, first set the proportional band (*Pr. 129*) to a slightly larger value, the integral time (*Pr. 130*) to a slightly longer time, and the differential time (*Pr. 134*) to "9999" (no function), and while looking at the system operation, decrease the proportional band (*Pr. 129*) and increase the integral time (*Pr. 130*). For slow response system where a deadband exists, differential control (*Pr. 134*) shuold be turned on and increased slowly.

*When calibration is required → Using calibration *Pr. 902* and *Pr. 903* (terminal 2) or *Pr. 904* and *Pr. 905* (terminal 4), calibrate the detector output and target setting input.
Make calibration in the PU mode during an inverter stop.

購買、維修 此手冊零組件
電話： 037-466333
www.repairtw.com

<Set point input calibration>

1. Apply the input voltage of 0% set point setting (e.g. 0V) across terminals 2-5.
2. Enter in *C2 (Pr. 902)* the frequency which should be output by the inverter at the deviation of 0% (e.g. 0Hz).
3. In *C3 (Pr.902)*, set the voltage value at 0%.
4. Apply the voltage of 100% set point (e.g. 5V) across terminals 2-5.
5. Enter in *Pr.125* the frequency which should be output by the inverter at the deviation of 100% (e.g. 60Hz).
6. In *C4 (Pr.903)*, set the voltage value at 100%.

<Measured value calibration>

1. Apply the input current of 0% measured value (e.g. 4mA) across terminals 4-5.
2. Make calibration using *C6 (Pr. 904)*.
3. Apply the input current of 100% measured value (e.g. 20mA) across terminals 4-5.
4. Make calibration using *C7 (Pr. 905)*.

REMARKS

- The frequency set in *C5 (Pr. 904)* and *Pr. 126* should be the same as set in *C2 (Pr. 902)* and *Pr. 125* .

The results of the above calibration are as shown below:

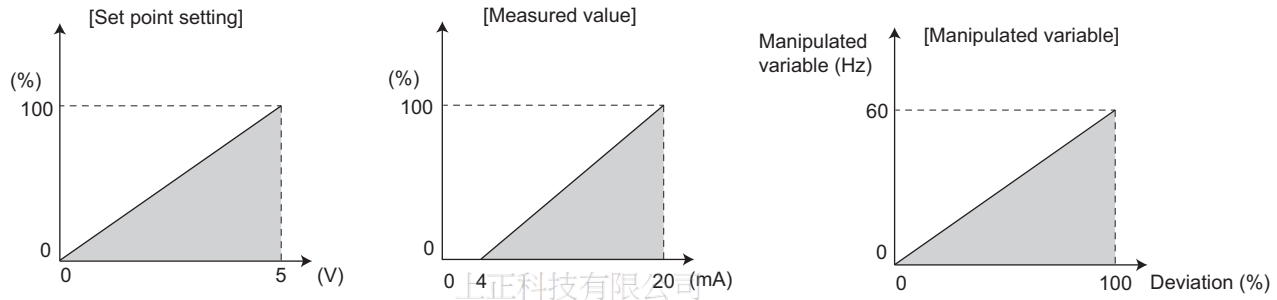

上正科技有限公司
購買、維修 此手冊零組件
電話： 037-466333
Email： service@repairtw.com
www.repairtw.com

NOTE

- **If the multi-speed (RH, RM, RL, REX signal) or Jog operation (JOG signal) is entered with the X14 signal ON, PID control is stopped and multi-speed or Jog operation is started.**
- **If the setting is as follows, PID control becomes invalid.**
  ***Pr. 79 Operation mode selection* ="6" (switchover mode)**
  The inverter is at a stop with *Pr. 261 Power failure stop selection* selected.
- **Changing the terminal function using any of *Pr. 178 to Pr. 182, Pr. 190, Pr. 192* may affect the other functions. Make setting after confirming the function of each terminal.**
- **When PID control is selected, the minimum frequency is the frequency set in *Pr. 902* and the maximum frequency is the frequency set in *Pr. 903*.**
  (*Pr. 1 Maximum frequency* and *Pr. 2 Minimum frequency* settings are also valid.)
- **The remote operation function is invalid during PID operation.**
- **When the control is switched to PID control during normal operation, the frequency command value calculated by PID operation using 0Hz as standard is used without the frequency during the operation.**

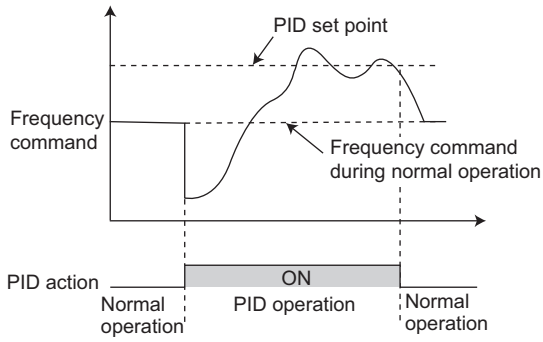

Operation when control is switched to PID control during normal operation

Parameters referred to

Pr. 59 Remote function selection Refer to page 93
Pr. 73 Analog input selection Refer to page 150
Pr. 79 Operation mode selection Refer to page 165
Pr. 178 to Pr. 182 (input terminal function selection) Refer to page 113
Pr. 190, Pr. 192 (output terminal function selection) Refer to page 119
Pr. 261 Power failure stop selection Refer to page 142
Pr. 561 PTC thermistor protection level Refer to page 100
C2 (Pr. 902) to C7 (Pr. 905) Frequency setting voltage (current) bias/gain Refer to page 153

4.20.2 Dancer control (Pr. 44, Pr. 45, Pr. 128 to Pr. 134)

Performs PID control by feedbacking the position detection of the dancer roller, controlling the dancer roller is in the specified position.

Parameter Number	Name	Initial Value		Setting Range	Description		
44	Second acceleration/ deceleration time	FR-D720-165 or less FR-D740-080 or less FR-D720S-008 to 100	5s	0 to 3600s	This parameter is the acceleration time of the main speed during dancer control. It will not function as second acceleration/deceleration time.		
		FR-D720-238 or more FR-D740-120 or more	10s				
45	Second deceleration time	9999		0 to 3600s	This parameter is the deceleration time of the main speed during dancer control. It will not function as second deceleration time.		
				9999			
128	PID action selection	0		0	PID action is not performed		
				20	PID reverse action	Measured value (terminal 4) Set value (terminal 2 or *Pr. 133*)	
				21	PID forward action		
				40	PID reverse action	Addition method: fixed	For dancer control set point *(Pr. 133)*, measured value (terminal 4) main speed (speed command of the operation mode)
				41	PID forward action	Addition method: fixed	
				42	PID reverse action	Addition method: ratio	
				43	PID forward action	Addition method: ratio	
129 *1	PID proportional band	100%		0.1 to 1000%	If the proportional band is narrow (parameter setting is small), the manipulated variable varies greatly with a slight change of the measured value. Hence, as the proportional band narrows, the response sensitivity (gain) improves but the stability deteriorates, e.g. hunting occurs. Gain Kp = 1/proportional band		
				9999	No proportional control		
130 *1	PID integral time	1s		0.1 to 3600s	When deviation step is input, time (Ti) is the time required for integral (I) action to provide the same manipulated variable as the proportional (P) action. As the integral time decreases, the set point is reached earlier but hunting occurs more easily.		
				9999	No integral control.		
131	PID upper limit	9999		0 to 100%	Maximum value If the feedback value exceeds the setting, the FUP signal is output. The maximum input (20mA/5V/10V) of the measured value (terminal 4) is equivalent to 100%.		
				9999	No function		
132	PID lower limit	9999		0 to 100%	Minimum value If the process value falls below the setting range, the FDN signal is output. The maximum input (20mA/5V/10V) of the measured value (terminal 4) is equivalent to 100%.		
				9999	No function		
133 *1	PID action set point	9999		0 to 100%	Used to set the set point for PID control.		
				9999	Always 50%		
134 *1	PID differential time	9999		0.01 to 10s	For deviation ramp input, time (Td) required for providing only the manipulated variable for the proportional (P) action. As the differential time increases, greater response is made to a deviation change.		
				9999	No differential control.		

The above parameters can be set when *Pr.160 Extended function display selection* ="0". *(Refer to page 162)*

*1 *Pr. 129, Pr. 130, Pr. 133 and Pr.134* can be set during operation. They can also be set independently of the operation mode.

上正科技有限公司
購買、維修 此手冊零組件
電話： 037-466333
Email: service@repairtw.com
Line id: @zzzz
www.repairtw.com

(1) Dancer control block diagram

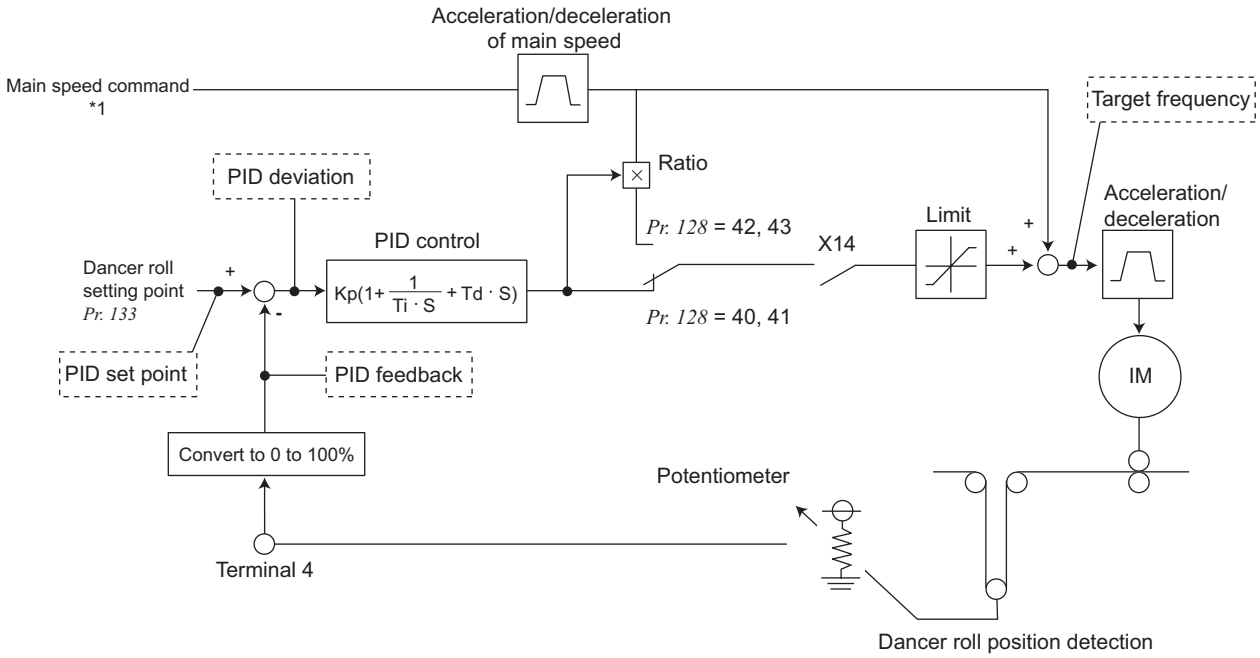

*1 The main speed can be selected from all operation mode such as external (analog voltage input, multi-speed), PU (digital frequency setting), and communication (RS-485).

Set point and measured value of PID control

	Input	Input Signal	*Pr.267* Setting	Voltage/Current Input Switch
Set point	*Pr. 133*	0 to 100%	—	—
Measured value	When measured value is input as current (4 to 20mA)	4mA..... 0%, 20mA .. 100%	0	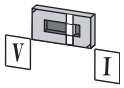
	When measured value is input as voltage (0 to 5V or 0 to 10V)	0V ..... 0%, 5V 100%	1	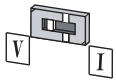
		0V ..... 0%, 10V..... 100%	2	

上記科技有限公司
購買、維修、出手機零組件
電話： 037-466333
Email: service@repairtw.com
Line id: @zzzz
www.repairtw.com

NOTE

- **Changing the terminal function using any of *Pr.178 to Pr.182* may affect the other functions. Make setting after confirming the function of each terminal.**
- **When the *Pr. 267* setting was changed, check the voltage/current input switch setting. Different setting may cause a fault, failure or malfunction. (*Refer to page 150* for setting)**

(2) Dancer control overview

Performs dancer control by setting 40 to 43 in *Pr. 128 PID action selection.* The main speed command is the speed command of each operation mode (external, PU, communication). Performs PID control by the position detection signal of the dancer roller, then the result is added to the main speed command. For acceleration/deceleration of the main speed, set the acceleration time in *Pr. 44 Second acceleration/deceleration time/Pr. 45 Second deceleration time*.

* Set 0s normally to *Pr. 7 Acceleration time* and *Pr.8 Deceleration time*. When the *Pr. 7 and Pr. 8* setting is large, response of dancer control during acceleration/deceleration is slow.

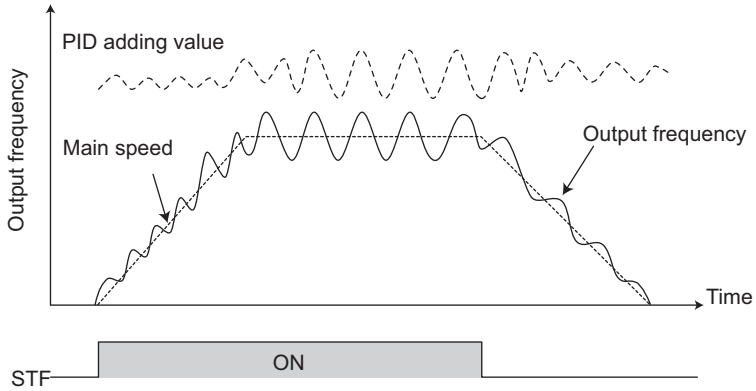

(3) Connection diagram

- Sink logic
- *Pr. 128* = 41
- *Pr. 182* = 14
- *Pr. 190* = 15
- *Pr. 192* = 16

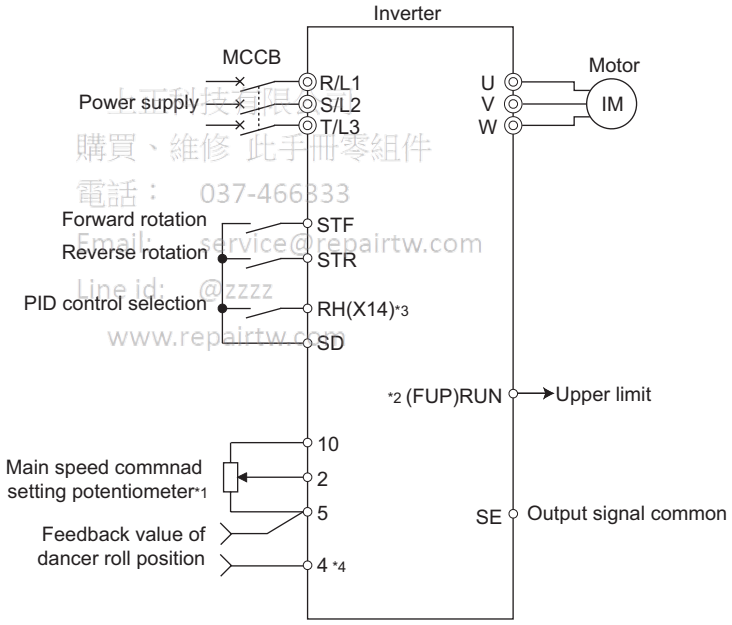

上可科技有限
購買、維修 此手冊零組件
電話： 037-466333
Email: service@repairtw.com
Line id: @zzzz
www.repairtw.com

*1 The main speed command differs according to each operation mode (external, PU, communication)

*2 The used output signal terminal changes depending on the *Pr. 190, Pr. 192 (output terminal selection)* setting.

*3 The used input signal terminal changes depending on the *Pr. 178 to Pr. 182(input terminal selection)* setting.

*4 The AU signal need not be input.

(4) I/O signals and parameter setting

- Set "40 to 43" in *Pr. 128* to perform dancer control.
- Set "14" in any of *Pr. 178 to Pr. 182* (*input terminal function selection*) to assign PID control selection signal (X14) to turn the X14 signal ON.
  When the X14 signal is not assigned, only the *Pr. 128* setting makes dancer control valid.
- Input the main speed command (external, PU, communication). The main speed command in any operation mode can be input. (Note that terminal 4 can not be used as the main speed command.)
- Input the set point using *Pr. 133*, then input the measured value signal (dancer roller position detection signal) across terminal 4 and 5 of the inverter.

REMARKS

- When *Pr. 128* = "0" or X14 signal is OFF, normal inverter operation is performed without dancer control.
- Turning ON/OFF of bit of the terminal, to which X14 signal is assigned through network as RS-485 communication, enables dancer control.

Signal		Terminal Used	Function	Description	Parameter Setting
Input	X14	Depending on *Pr. 178* to *Pr. 182*	PID control selection	Turn ON X14 signal to perform dancer control. ∗1	Set 14 in any of *Pr. 178 to Pr. 182*.
Input	4	4	Measured value input	Input the signal from the dancer roller detector (measured value signal).	*Pr.128* = 40, 41, 42, 43
				4 to 20mA . 0 to 100%	*Pr.267* = 0 ∗2
				0 to 5V ..... 0 to 100%	*Pr.267* = 1
				0 to 10V .... 0 to 100%	*Pr.267* = 2
Output	FUP	Depending on *Pr. 190, Pr. 192*	Upper limit output	Output to indicate that the measured value signal exceeded the maximum value *(Pr. 131)*.	*Pr.128* = 40, 41, 42, 43 *Pr.131* ≠ 9999 Set 15 or 115 in *Pr.190* or *Pr.192*. ∗3
Output	FDN		Lower limit output	Output when the measured value signal falls below the minimum value *(Pr. 132)*.	*Pr.128* = 40, 41, 42, 43 *Pr.132* ≠ 9999 Set 14 or 114 in *Pr.190* or *Pr.192*. ∗3
Output	RL		Forward (reverse) rotation direction output	Output is "ON" when the output indication of the parameter unit is forward rotation (FWD) and "OFF" when reverse rotation (REV) or stop (STOP).	Set 16 or 116 in *Pr. 190* or *Pr. 192*. ∗3
Output	PID		During PID control activated	Turns ON during PID control.	Set 47 or 147 in *Pr. 190* or *Pr. 192*. ∗3
Output	SE	SE	Output terminal common	Common terminal for open collector output terminal	

∗1 When the X14 signal is not assigned, only the *Pr. 128* setting makes dancer control valid.
∗2 The shaded area indicates the parameter initial value.
∗3 When 100 or larger value is set in any of *Pr. 190, Pr. 192 (output terminal function selection)*, the terminal output has negative logic. *(Refer to page 119 for details)*

上立科技有限公司
購買・維修 此手冊零組件
電話：+886-3-7466333
Email: service@repairtw.com
Line ID: @ezza
www.repairtw.com

NOTE

- **Changing the terminal function using any of *Pr. 178 to Pr. 182, Pr.190, Pr.192* may affect the other functions. Make setting after confirming the function of each terminal.**
- **When the *Pr. 267* setting was changed, check the voltage/current input switch setting. Different setting may cause a fault, failure or malfunction. (*Refer to page 150* for setting)**
- **Turn OFF PID output suspension function (*Pr. 575* = "9999") while using dancer control.**
- **When *Pr. 561 PTC thermistor protection level* ≠ "9999", terminal 2 is not available for main speed command. Terminal 2 is used as PTC thermistor input terminal.**

(5) Parameter details

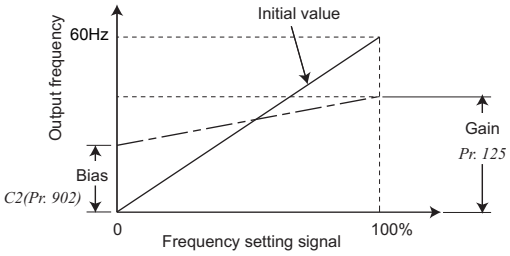

•When ratio (*Pr. 128* = "42, 43") is selected for addition method, PID control × (ratio of main speed) is added to the main speed. The ratio is determined by the *Pr. 125 Terminal 2 frequency setting gain frequency* and *C2 (Pr. 902) Terminal 2 frequency setting bias frequency*. The frequency setting signal is set to 0 to 60Hz in the range between 0 to 100% in the initial setting. The ratio is (×100%) when the main speed is 60Hz and (×50%) when 30Hz.

NOTE

- **Even when *C4 (Pr. 903)* is set to other than 100%, the frequency setting signal is considered as 100%.**
- **Even when *C3 (Pr. 903)* is set to other than 0%, the frequency setting signal is considered as 0%.**
- **When *C2 (Pr .902)* is set to other than 0Hz, the frequency setting signal is 0% when *C2 (Pr. 902)* is less than the set frequency.**

•Turning X14 signal on/off during operation by assigning X14 signal results in the following operation.
When X14 signal is on: Uses output frequency unchanged as the main speed command and continues operation by dancer control.
When X14 signal is off: Ends dancer control and continues operation at the set frequency made valid.

Pr. 128 Setting	PID Action	Addition Method	Set Point	Measured Value	Main Speed Command
40	Reverse action	Fixed	*Pr. 133*	Terminal 4	Speed command for each operation mode
41	Forward action				
42	Reverse action	Ratio			
43	Forward action				

•Action of *Pr. 129 PID proportional band, Pr. 130 PID integral time, Pr. 131 PID upper limit, Pr. 132 PID lower limit, Pr. 134 PID differential time* is the same as PID control. For the relationship of controlled variable (%) of PID control and frequency, 0% is equivalent to the set frequency of *Pr. 902* and 100% to *Pr. 903* .
•For the *Pr. 133 PID action set point* setting, set frequency of *Pr. 902* is equivalent to 0% and *Pr. 903* to 100%. When *9999* is set in *Pr. 133*, 50% is the set point.

上達科技有限公司
維修 電話： 037-466333
Email: service@repairtw.com
Line id: @zzzz

REMARKS

Pr. 127 PID control automatic switchover frequency is invalid.

(6) Output signal

•Output terminal assignment during dancer control (PID control) operation
PID signal turns on during dancer control (PID control) or at a stop by PID control (in the status PID operation being performed inside) (The signal is OFF during normal operation.)
For the terminal used for PID signal output, assign the function by setting "47 (positive logic) or 147 (negative logic)" in *Pr. 190* or *Pr. 192 (output terminal function selection)*.

NOTE

- **Changing the terminal function using any of *Pr. 178* to *Pr. 182, Pr. 190, Pr. 192* may affect the other functions. Make setting after confirming the function of each terminal.**

(7) PID monitor function

•The PID control set point and measured value can be output to the operation panel monitor display and terminal AM.
•For each monitor, set the following value in *Pr. 52 DU/PU main display data selection* and *Pr. 158 AM terminal function selection*.

Setting	Monitor Description	Minimum Increments	Terminal AM Full Scale	Remarks
52	**PID set point**	0.1%	100%	—
53	**PID measured value**	0.1%	100%	
54	**PID deviation**	0.1%	—	Value cannot be set in *Pr. 158*. Displays 1000 when the PID deviation is 0%.

(8) Priorities of main speed command

•The priorities of the main speed speed command source when the speed command source is external are as follows.
JOG signal > multi-speed setting signal (RL/RM/RH/REX) > temrinal 2
•The priorities of the main speed speed command source when "3" is set in *Pr. 79*.
Multi-speed setting signal (RL/RM/RH/REX) > set frequency (digital setting by PU, operation panel)
•Terminal 4 can not be selected as the main speed speed command even when AU terminal is turned ON.
•Even when a remote operation function is selected by setting a value other than "0" in *Pr. 59*, compensation of the remote setting frequency to the main speed is ignored (changes to 0).

(9) Adjustment procedure

●Dancer roller position detection signal adjustment

When terminal 4 input is voltage input, 0V is the minimum position and 5V(10V) is the maximum position. When current is input, 4mA is the minimum position and 20mA is the maximum position. (initial value) When 0 to 7V is output from the potentiometer, it is necessary to calibrate *C7 (Pr .905)* at 7V.

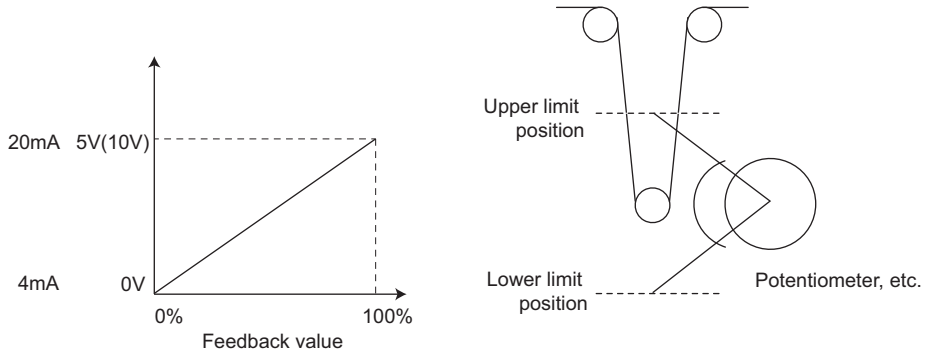

(Example) Control at a dancer center position using a 0 to 7V potentiometer

1) After changing the current/voltage input switch to "V", set "2" in *Pr. 267* to change terminal 4 input to voltage input.
2) Input 0V to across terminal 4 and 5 to calibrate *C6 (Pr. 904)*. (% display displayed at analog calibration is independent to % of the feed back value.)
3) By inputting 7V to across terminal 4 to 5, calibrate *C7(Pr. 905)* (% display displayed at analog calibration is independent to % of the feed back value.)
4) Set 50% in *Pr.133*.

NOTE

When the *Pr. 267* setting was changed, check the voltage/current input switch setting. Different setting may cause a fault, failure or malfunction. (*Refer to page 150* for setting)

上正科技有限公司
銷售 維修 此手冊零組件
電話： 037-466333
Email: service@repairtw.com
www.repairtw.com

REMARKS

- In normal PID control, PID control is stopped when multi-speed operation signal (RH, RM, RL, REX signal) or JOG signal is input. In dancer control, however, PID control continues handling the signals as the main speed.
- During dancer control, *Second acceleration/deceleration time* of *Pr.44* and *Pr.45* are the parameters for acceleration/deceleration time setting to the main speed command source. They do not function as the second function.
- When switchover mode is set with "6" in *Pr. 79*, dancer control (PID control) is invalid.
- Speed command of terminal 4 input from terminal AU is invalid when dancer control is selected.
- Acceleration/deceleration of the main speed command is the same operation as when frequency command is increased/decreased by analog input.
  - Therefore, SU signal remains ON even if the starting signal is turned ON/OFF.(always in the constant speed state)
  - The DC brake operation starting frequency when turning off the starting signal is not *Pr. 10* but a smaller value of either *Pr. 13* or 0.5Hz.
  - The set frequency monitor is always variable as "main speed command+PID control".
- The main speed setting frequency accelerates for the acceleration/deceleration time set in *Pr. 44* and *Pr. 45* and the output frequency accelerates/decelerates for the acceleration/deceleration time set in *Pr. 7* and *Pr. 8*. Therefore, when the set time of *Pr. 7* and *Pr. 8* is longer than *Pr. 44* and *Pr. 45*, the output frequency accelerates/decelerates for the acceleration/deceleration time set in *Pr. 7* and *Pr. 8*.
- For the integral term limit, a smaller value of either the PID manipulated variable (%) value converted from the linear interpolated *Pr. 1 Maximum frequency* with *Pr. 902* and *Pr. 903* , or 100% is used for limit.
  Although the output frequency is limited by the minimum frequency, operation limit of the integral term is not performed.

Parameters referred to

Pr. 59 Remote function selection ☞ *Refer to page 93*
Pr. 73 Analog input selection ☞ *Refer to page 150*
Pr. 79 Operation mode selection ☞ *Refer to page 165*
Pr. 178 to Pr. 182 (input terminal function selection) ☞ *Refer to page 113*
Pr. 190, Pr. 192 (output terminal function selection) ☞ *Refer to page 119*
Pr. 561 PTC thermistor protection level ☞ *Refer to page 100*
C2 (Pr. 902) to C7 (Pr. 905) Frequency setting voltage (current) bias/gain ☞ *Refer to page 153*

4.20.3 Regeneration avoidance function (Pr. 665, Pr. 882, Pr. 883, Pr. 885, Pr. 886)

This function detects a regeneration status and increases the frequency to avoid the regenerative status.

- Possible to avoid regeneration by automatically increasing the frequency to continue operation if the fan happens to rotate faster than the set speed due to the effect of another fan in the same duct.

Parameter Number	Name	Initial Value		Setting Range	Description
882	Regeneration avoidance operation selection	0		0	Regeneration avoidance function invalid
				1	Regeneration avoidance function is always valid
				2	Regeneration avoidance function is valid only during a constant speed operation
883	Regeneration avoidance operation level	200V class	400 VDC	300 to 800V	Bus voltage level at which regeneration avoidance operates. When the bus voltage level is set to low, overvoltage error will be less apt to occur. However, the actual deceleration time increases. The set value must be higher than the "power supply voltage × $\sqrt{2}$".
		400V class	780 VDC		
885	Regeneration avoidance compensation frequency limit value	6Hz		0 to 10Hz	Limit value of frequency which rises at activation of regeneration avoidance function.
				9999	Frequency limit invalid
886	Regeneration avoidance voltage gain	100%		0 to 200%	Responsiveness at activation of regeneration avoidance. A larger setting will improve responsiveness to the bus voltage change. However, the output frequency could become unstable. When vibration is not suppressed by decreasing the *Pr. 886* setting, set a smaller value in *Pr. 665*.
665	Regeneration avoidance frequency gain	100%		0 to 200%	

The above parameters can be set when *Pr. 160 Extended function display selection* = "0". *(Refer to page 162)*

上正科技有限公司
購買、維修、快手四零組件
電話：037-466333
Email: service@repairtw.com
www.repairtw.com

(1) What is regeneration avoidance function? *(Pr. 882, Pr. 883)*

- When the regeneration load is large, the DC bus voltage rises and an overvoltage fault (E. OV□) may occur. When this bus voltage rise is detected and the bus voltage level reaches or exceeds *Pr. 883*, increasing the frequency avoids the regeneration status.
- The regeneration avoidance function is always on when "1" is set in *Pr. 882*, and activated only during a constant speed when "2" is set in *Pr. 882*.

Regeneration avoidance operation example for acceleration

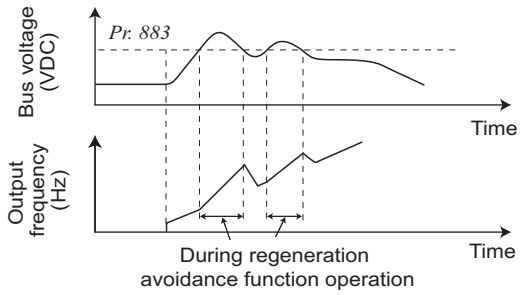

Regeneration avoidance operation example for constant speed

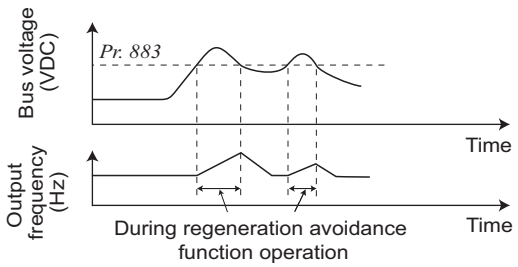

Regeneration avoidance operation example for deceleration

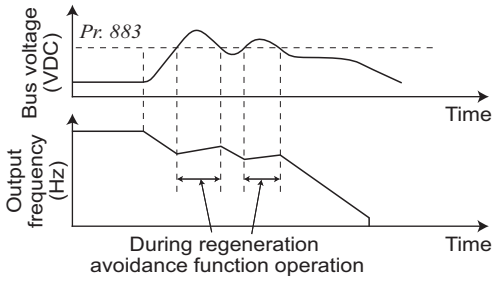

REMARKS

- The acceleration/deceleration ramp while the regeneration avoidance function is operating changes depending on the regeneration load.
- The DC bus voltage of the inverter is about $\sqrt{2}$ times of normal input voltage.
  When the input voltage is 220VAC, bus voltage is approximately 311VDC.
  When the input voltage is 440VAC, bus voltage is approximately 622VDC.
  However, it varies with the input power supply waveform.
- The *Pr. 883* setting should be kept higher than the DC bus voltage level. Otherwise, the regeneration avoidance function is always on even in the non-regeneration status and the frequency increases.
- While overvoltage stall (oL) is activated only during deceleration and stops the output frequency, the regeneration avoidance function is always on (*Pr. 882* = 1) or activated only during a constant speed (*Pr. 882* = 2) and increases the frequency according to the regeneration amount.

(2) Limit regeneration avoidance operation frequency *(Pr. 885)*

You can limit the output frequency compensated (increased) by the regeneration avoidance function.

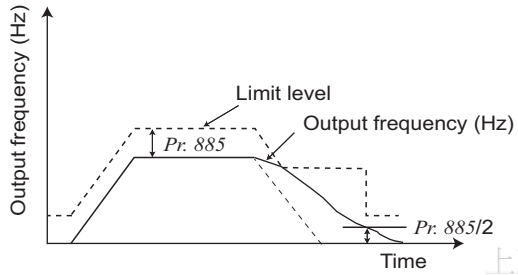

- The frequency is limited to the output frequency (frequency prior to regeneration avoidance operation) + *Pr. 885 Regeneration avoidance compensation frequency limit value* during acceleration or constant speed.
  If the regeneration avoidance frequency exceeds the limit value during deceleration, the limit value is held until the output frequency falls to 1/2 of *Pr. 885*.
- When the frequency increased by regeneration avoidance function has reached *Pr. 1 Maximum frequency*, it is limited to the maximum frequency.
- When *Pr. 885* is set to "9999", regeneration avoidance function operation frequency setting is invalid.

上正科技有限公司
購買、維修 此手冊電子版
電話： 04-[illegible]
Email: service@repairtw.com
Line id: @zzzz
www.repairtw.com

(3) Regeneration avoidance function adjustment *(Pr. 665, Pr. 886)*

- If the frequency becomes instable during regeneration avoidance operation, decrease the setting of *Pr. 886 Regeneration avoidance voltage gain*. Reversely, if sudden regeneration causes an overvoltage alarm, increase the setting.
  When vibration is not suppressed by decreasing the *Pr. 886* setting, set a smaller value in *Pr. 665 Regeneration avoidance frequency gain*.

NOTE

- **When regeneration avoidance operation is performed, oL (overvoltage stall) is displayed and the OL signal is output.**
- **When regeneration avoidance operation is performed, stall prevention is also activated at the same time.**
- **The regeneration avoidance function cannot shorten the actual deceleration time taken to stop the motor. The actual deceleration time depends on the regeneration energy consumption capability. To shorten the deceleration time, consider using the regeneration unit (FR-BU2, FR-CV, FR-HC) and brake resistor (MRS type, MYS type, FR-ABR etc.) to consume regeneration energy at constant speed.**
- **When using the regeneration unit (FR-BU2, FR-CV, FR-HC) and brake resistor (MRS type, MYS type, FR-ABR etc.,), set *Pr. 882* to "0 (initial value)" (regeneration avoidance function invalid). When using the regeneration unit, etc. to consume regeneration energy at deceleration, set *Pr. 882* to "2" (regeneration avoidance function valid only at a constant speed).**
- **When regeneration avoidance operation is performed, the OL signal output item of *Pr. 156* also becomes the target of oL (overvoltage stall). *Pr. 157 OL signal output timer* also becomes the target of oL (overvoltage stall).**

Parameters referred to

Pr. 1 Maximum frequency Refer to page 83
Pr. 8 Deceleration time Refer to page 96
Pr. 22 Stall prevention operation level Refer to page 79

4.21 Useful functions

Purpose	Parameter that should be Set		Refer to Page
To increase cooling fan life	Cooling fan operation selection	Pr. 244	228
To determine the maintenance time of parts	Inverter part life display	Pr. 255 to Pr. 259	229
	Maintenance output function	Pr. 503, Pr. 504	233
	Current average value monitor signal	Pr. 555 to Pr. 557	234
Freely available parameter	Free parameter	Pr. 888, Pr. 889	236

4.21.1 Cooling fan operation selection (Pr. 244)

You can control the operation of the cooling fan (FR-D720-070 or more, FR-D740-036 or more, FR-D720S-070 or more) built in the inverter.

Parameter Number	Name	Initial Value	Setting Range	Description
244	Cooling fan operation selection	1	0	Operates in power-on status. Cooling fan ON/OFF control invalid (the cooling fan is always on at power-on)
			1	Cooling fan ON/OFF control valid The fan is always on while the inverter is running. During a stop, the inverter status is monitored and the fan switches ON/OFF according to the temperature.

The above parameter can be set when *Pr.160 Extended function display selection* = "0". *(Refer to page 162)*

上正科技有限公司
購買、維修 此手冊零組件
電話: 886-2-2553-7533
Email: service@repairtw.com
Line id: @zzzz
www.repairtw.com

- In either of the following cases, fan operation is regarded as faulty as [FN] is shown on the operation panel, and the fan fault (FAN) and alarm (LF) signals are output.
  - *Pr. 244* = "0"
    When the fan comes to a stop with power on.
  - *Pr. 244* = "1"
    When the inverter is running and the fan stops during fan ON command.

- For the terminal used for FAN signal output, set "25 (positive logic) or 125 (negative logic)" to *Pr. 190* or *Pr. 192 (output terminal function selection)*, and for the LF signal, set "98 (positive logic) or 198 (negative logic)".

NOTE

- **Changing the terminal assignment using *Pr. 190, Pr. 192 (output terminal function selection)* may affect the other functions. Make setting after confirming the function of each terminal.**

Parameters referred to

Pr. 190, Pr. 192 (output terminal function selection) ☞ *Refer to page 119*

4.21.2 Display of the life of the inverter parts (Pr. 255 to Pr. 259)

Degrees of deterioration of main circuit capacitor, control circuit capacitor, cooling fan and inrush current limit circuit can be diagnosed by a monitor.
When any part has approached to the end of its life, an alarm can be output by self diagnosis to prevent a fault.
(Use the life check of this function as a guideline since the life except the main circuit capacitor is calculated theoretically.)
For the life check of the main circuit capacitor, the alarm signal (Y90) will not be output if a measuring method of (4) is not performed.

Parameter Number	Name	Initial Value	Setting Range	Description
255	**Life alarm status display**	0	(0 to 15)	Displays whether the control circuit capacitor, main circuit capacitor, cooling fan, and each parts of the inrush current limit circuit have reached the life alarm output level or not. (Reading only)
256	**Inrush current limit circuit life display**	100%	(0 to 100%)	Displays the deterioration degree of the inrush current limit circuit. (Reading only)
257	**Control circuit capacitor life display**	100%	(0 to 100%)	Displays the deterioration degree of the control circuit capacitor. (Reading only)
258	**Main circuit capacitor life display**	100%	(0 to 100%)	Displays the deterioration degree of the main circuit capacitor. (Reading only) The value measured by *Pr. 259* is displayed.
259	**Main circuit capacitor life measuring**	0	0, 1 (2, 3, 8, 9)	Setting "1" and turning the power supply off starts the measurement of the main circuit capacitor life. When the *Pr. 259* value is "3" after powering on again, the measuring is completed. Writes deterioration degree in *Pr. 258*.

The above parameters can be set when *Pr. 160 Extended function display selection* = "0". (*Refer to page 162*)

上正科技有限公司
購買、維修 此手冊零組件
電話： 037-466333
Email: service@repairtw.com
Line ID: @rrr
www.repairtw.com

(1) Life alarm display and signal output (Y90 signal, *Pr. 255*)

•Whether any of the control circuit capacitor, main circuit capacitor, cooling fan and inrush current limit circuit has reached the life alarm output level or not can be checked by *Pr. 255 Life alarm status display* and life alarm signal (Y90).

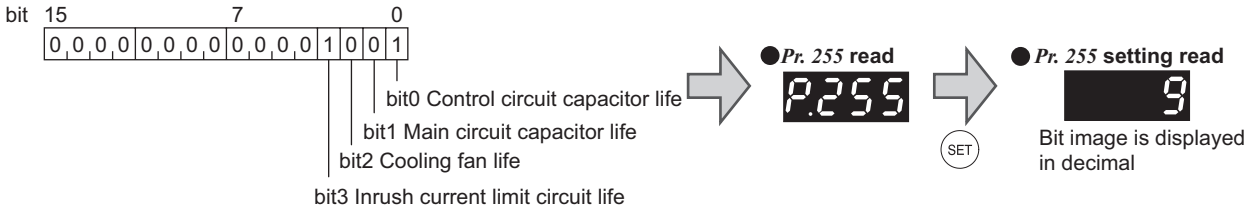

Pr. 255 (decimal)	Bit (binary)	Inrush Current Suppression Circuit Life	Cooling Fan Life	Main Circuit Capacitor Life	Control Circuit Capacitor Life
15	1111	○	○	○	○
14	1110	○	○	○	×
13	1101	○	○	×	○
12	1100	○	○	×	×
11	1011	○	×	○	○
10	1010	○	×	○	×
9	1001	○	×	×	○
8	1000	○	×	×	×
7	0111	×	○	○	○
6	0110	×	○	○	×
5	0101	×	○	×	○
4	0100	×	○	×	×
3	0011	×	×	○	○
2	0010	×	×	○	×
1	0001	×	×	×	○
0	0000	×	×	×	×

○: With warnings, ×: Without warnings

上良科技有限公司
購買 維修 此手冊零組件
電話： 037-466333
Email: service@repairtw.com
www.repairtw.com

•The life alarm signal (Y90) turns on when any of the control circuit capacitor, main circuit capacitor, cooling fan and inrush current limit circuit reaches the life alarm output level.

•For the terminal used for the Y90 signal, set "90" (positive logic) or "190" (negative logic) to *Pr. 190 or Pr. 192 (output terminal function selection)*.

NOTE

- **Changing the terminal assignment using *Pr. 190, Pr. 192 (output terminal function selection)* may affect the other functions. Make setting after confirming the function of each terminal.**

(2) Inrush current limit circuit life display *(Pr. 256)*

•The life of the inrush current limit circuit (relay, contactor and inrush resistor) is displayed in *Pr. 256* .

•The number of contact (relay, contactor, thyristor) ON times is counted, and it is counted down from 100% (0 times) every 1%/10,000 times.

As soon as 10% (900,000 times) is reached, *Pr. 255* bit 3 is turned on and also an alarm is output to the Y90 signal.

(3) Control circuit capacitor life display *(Pr. 257)*

•The deterioration degree of the control circuit capacitor is displayed in *Pr. 257* as a life.

•In the operating status, the control circuit capacitor life is calculated from the energization time and temperature, and is counted down from 100%.

As soon as the control circuit capacitor life falls below 10%, *Pr. 255* bit 0 is turned on and also an alarm is output to the Y90 signal.

(4) Main circuit capacitor life display *(Pr. 258, Pr. 259)*

- The deterioration degree of the control circuit capacitor is displayed in *Pr. 258* as a life.
- On the assumption that the main circuit capacitor capacitance at factory shipment is 100%, the capacitor life is displayed in *Pr. 258* every time measurement is made.
  When the measured value falls to or below 85%, *Pr. 255* bit 1 is turned on and also an alarm is output to the Y90 signal.
- Measure the capacitor capacity according to the following procedure and check the deterioration level of the capacitor capacity.
  1) Check that the motor is connected and at a stop.
  2) Set "1" (measuring start) in *Pr. 259.*
  3) Switch power off. The inverter applies DC voltage to the motor to measure the capacitor capacity while the inverter is off.
  4) After confirming that the LED of the operation panel is off, power on again.
  5) Check that "3" (measuring completion) is set in *Pr. 259*, read *Pr. 258*, and check the deterioration degree of the main circuit capacitor.

Pr. 259	Description	Remarks
0	No measurement	Initial value
1	Measurement start	Measurement starts when the power supply is switched off.
2	During measurement	Only displayed and cannot be set
3	Measurement complete	
8	Forced end	
9	Measurement error	

REMARKS

- When the main circuit capacitor life is measured under the following conditions, "forced end" (*Pr. 259* = "8") or "measuring error" (*Pr. 259* ="9") occurs or it remains in "measuring start" (*Pr. 259* = "1"). Therefore, do not measure in such case.
  In addition, even when "measurement completion" (*Pr. 259* = "3") is confirmed under the following conditions, normal measurement can not be done.
  (a) FR-HC or FR-CV is connected.
  (b) DC power supply is connected to the terminal P/+ and N/-.
  (c) The power supply switched on during measurement.
  (d) The motor is not connected to the inverter.
  (e) The motor is running (coasting)
  (f) The motor capacity is two rank smaller as compared to the inverter capacity.
  (g) The inverter is tripped or a fault occurred when power is off.
  (h) The inverter output is shut off with the MRS signal.
  (i) The start command is given while measuring.
  (j) The parameter unit (FR-PU04/FR-PU07) is connected.
  (k) Use terminal PC as power supply.
  (l) I/O terminal of the control terminal block is on (continuity).
- Turning the power on during measuring before LED of the operation panel turns off, it may remain in "measuring" (*Pr. 259* = "2") status. In such case, carry out operation from step 2.

上正科技有限公司
購買、維修、小手拉零組件
電話： 037-466333
Email: service@repairtw.com
Line ID: @2222
www.repairtw.com

POINT

For the accurate life measuring of the main circuit capacitor, perform after more than 3 hrs passed since the turn off of the power as it is affected by the capacitor temperature.

WARNING

When measuring the main circuit capacitor capacity (*Pr. 259 Main circuit capacitor life measuring* = "1"), the DC voltage is applied to the motor for 1s at powering off. Never touch the motor terminal, etc. right after powering off to prevent an electric shock.

(5) Cooling fan life display

- The cooling fan speed of 50% or less is detected and "FN" is displayed on the operation panel and parameter unit (FR-PU04/FR-PU07). As an alarm display, *Pr. 255* bit2 is turned on and also an alarm is output to the Y90 signal.

REMARKS

- When the inverter is mounted with two or more cooling fans, "FN" is displayed with one or more fans with speed of 50% or less.

NOTE

- **For replacement of each part, contact the nearest Mitsubishi FA center.**

上正科技有限公司
購買、維修 此手冊零組件
電話： 037-466333
Email: service@repairtw.com
Line id: @zzzz
www.repairtw.com

4.21.3 Maintenance timer alarm (Pr. 503, Pr. 504)

When the cumulative energization time of the inverter reaches the parameter set time, the maintenance timer output signal (Y95) is output. MT (MT) is displayed on the operation panel.
This can be used as a guideline for the maintenance time of peripheral devices.

Parameter Number	Name	Initial Value	Setting Range	Description
503	**Maintenance timer**	0	0 (1 to 9998)	Displays the cumulative energization time of the inverter in 100h increments. (Reading only) Writing the setting of "0" clears the cumulative energization time.
504	**Maintenance timer alarm output set time**	9999	0 to 9998	Time taken until when the maintenance timer alarm output signal (Y95) is output.
			9999	No function

The above parameters can be set when *Pr. 160 Extended function display selection* = "0". *(Refer to page 162)*

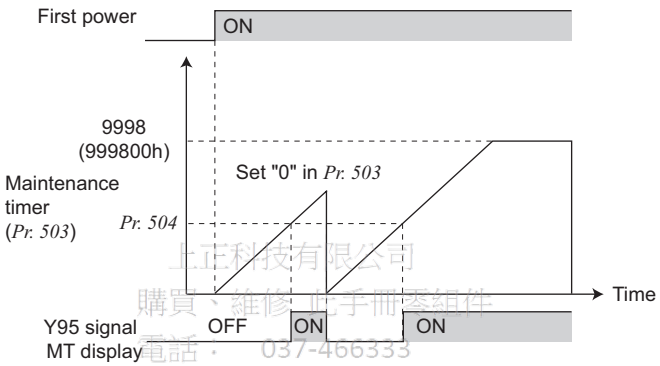

上正科技有限公司
購買、維修、此手冊零組件
電話： 037-466333
Email: service@repairtw.com
Line id: @zzzz
www.repairtw.com

- The cumulative energization time of the inverter is stored into the EEPROM every hour and is displayed in *Pr. 503 Maintenance timer* in 100h increments. *Pr. 503* is clamped at 9998 (999800h).
- When the *Pr. 503* value reaches the time set to *Pr. 504 Maintenance timer alarm output set time* (100h increments), the maintenance timer alarm output signal (Y95) is output.
- For the termial used for the Y95 signal output, assign the function by setting "95" (positive logic) or "195" (negative logic) to *Pr. 190 or Pr. 192 (output terminal function selection)*.

NOTE

- **The cumulative energization time is counted every hour. The energization time of less than 1h is not counted.**
- **Changing the terminal assignment using *Pr. 190, Pr. 192 (output terminal function selection)* may affect the other functions. Make setting after confirming the function of each terminal.**

Parameters referred to

Pr. 190, Pr. 192 (output terminal function selection) *Refer to page 119*

4.21.4 Current average value monitor signal (Pr. 555 to Pr. 557)

The average value of the output current during constant speed operation and the maintenance timer value are output as a pulse to the current average value monitor signal (Y93).
The pulse width output to the I/O module of the programmable controller or the like can be used as a guideline to know abrasion of machines, elongation of belt and the maintenance time for aged deterioration of devices.
The current average value monitor signal (Y93) is output as pulse for 20s as 1 cycle and repeatedly output during constant speed operation.

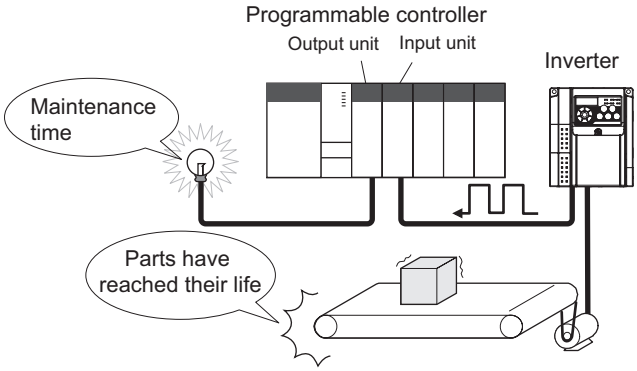

Parameter Number	Name	Initial Value	Setting Range	Description
555	**Current average time**	1s	0.1 to 1s	Time taken to average the current during start pulse output (1s).
556	**Data output mask time**	0s	0 to 20s	Time for not obtaining (mask) transient state data.
557	**Current average value monitor signal output reference current**	Rated inverter current	0 to 500A	Reference (100%) for outputting the signal of the current average value.

The above parameters can be set when *Pr. 160 Extended function display selection* = "0". *(Refer to page 162)*
The above parameters allow its setting to be changed during operation in any operation mode even if "0" (initial value) is set in *Pr. 77 Parameter write selection*.

上正科技有限公司
購買、維修 此手冊零組件
電話: 03-4563333
Email: service@repairtw.com
Line id: @zzzz
www.repairtw.com

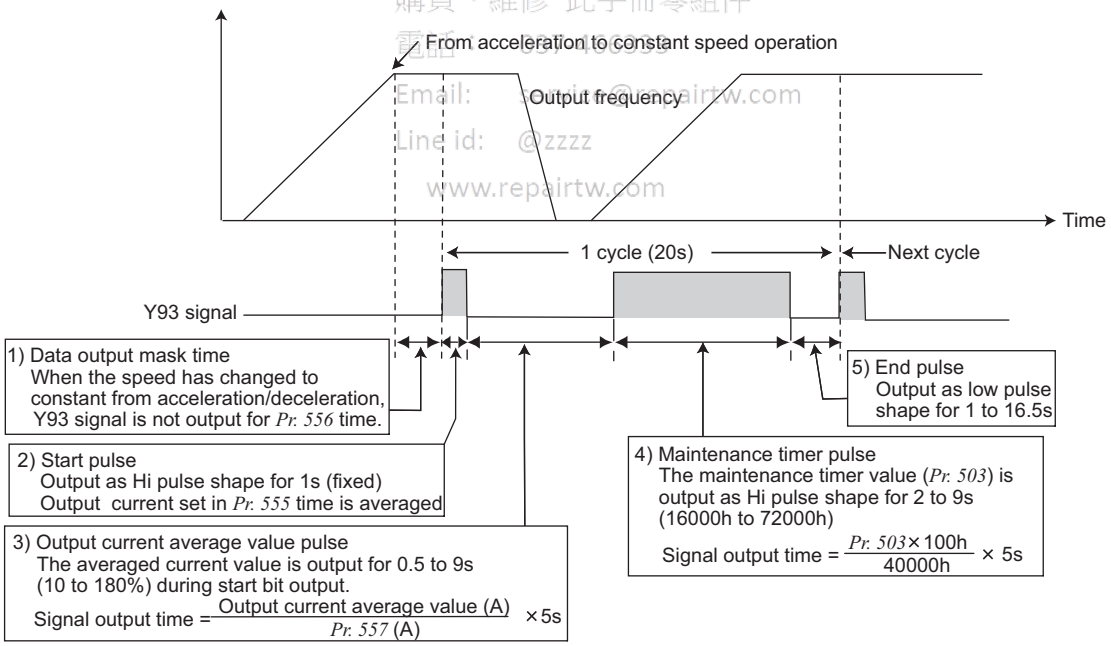

- The pulse output of the current average value monitor signal (Y93) is shown above.
- For the terminal used for the Y93 signal output, assign the function by setting "93" (positive logic) or "193" (negative logic) to *Pr. 190 RUN terminal function selection*. The function can not be assigned to *Pr. 192 A,B,C terminal function selection*.

1) Setting of *Pr. 556 Data output mask time*
The output current is unstable (transient state) right after the operation is changed from the acceleration/deceleration state to the constant speed operation. Set the time for not obtaining (mask) transient state data in *Pr. 556*.
2) Setting of *Pr. 555 Current average time*
The average output current is calculated during Hi output of start pulse (1s). Set the time taken to average the current during start bit output in *Pr. 555*.

3) Setting of *Pr.557 Current average value monitor signal output reference current*

Set the reference (100%) for outputting the signal of the current average value. Obtain the time to output the signal from the following calculation.

$$\frac{\textbf{Output current average value}}{\textbf{Pr. 557 setting}} \times \textbf{5s (Output current average value 100\%/5s)}$$

Note that the output time range is 0.5 to 9s and the output time is either of the following values when the output current average value is the corresponding percentage of the *Pr. 557* setting.

Less than 10% ... 0.5s, more than 180% ... 9s

Example) when *Pr. 557* = 10A and the average value of output current is 15A

As 15A/10A x 5s=7.5, the current average value monitor signal is output as low pulse shape for 7.5s.

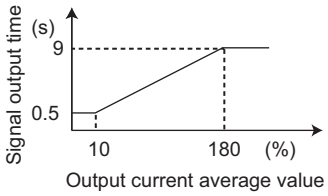

4) Setting of *Pr. 503 Maintenance timer*

After the output current average value is output as low pulse shape, the maintenance timer value is output as high pulse shape. The output time of the maintenance timer value is obtained from the following calculation.

$$\frac{\textbf{Pr. 503} \times \textbf{100}}{\textbf{40000h}} \times \textbf{5s} \quad \textbf{(Maintenance timer value 100\%/5s)}$$

Note that the output time range is 2 to 9s, and it is 2s when the *Pr. 503* setting is less than 16000h and 9s when exceeds 72000h.

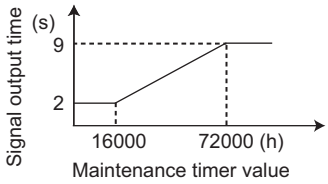

REMARKS

- Mask of data output and sampling of output current are not performed during acceleration/deceleration.
- When the speed is changed to acceleration/deceleration from constant speed during start pulse output, the data is judged as invalid. The start pulse is output as high pulse shape for 3.5s, and the end signal is output as low pulse shape for 16.5s.
  The signal is output for at least 1 cycle even when acceleration/deceleration state continues after the start pulse output is completed.

E-T科技有限公司
購買、維修 此手冊零組件
電話： 037-466333
Email: service@repairtw.com
Line id: @zzzz
www.repairtw.com

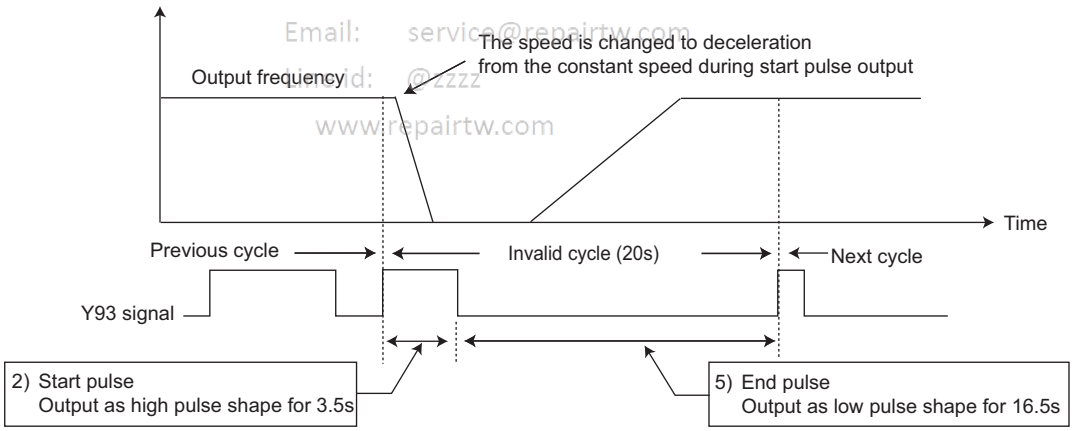

- When the output current value (inverter output current monitor) is 0A on completion of the 1 cycle signal output, the signal is not output until the speed becomes constant next time.
- The current average value monitor signal (Y93) is output as low pulse shape for 20s (without data output) under the following conditions.
  (a) When the motor is in the acceleration/deceleration state on completion of the 1 cycle signal output
  (b) When 1-cycle signal output was ended during restart operation with the setting of automatic restart after instantaneous power failure (*Pr. 57* ≠ "9999")
  (c) When restart operation was being performed at the point of data output mask end with the setting of automatic restart after instantaneous power failure (*Pr. 57* ≠ "9999")

NOTE

- **Changing the terminal assignment using *Pr. 190, Pr. 192 (output terminal function selection)* may affect the other functions. Make setting after confirming the function of each terminal.**

Parameters referred to

Pr. 57 Restart coasting time ☞ *Refer to page 136*
Pr. 190, Pr. 192 (output terminal function selection) ☞ *Refer to page 119*
Pr. 503 Maintenance timer ☞ *Refer to page 233*

4.21.5 Free parameter (Pr. 888, Pr. 889)

You can input any number within the setting range of 0 to 9999.
For example, the number can be used:
- As a unit number when multiple units are used.
- As a pattern number for each operation application when multiple units are used.
- As the year and month of introduction or inspection.

Parameter Number	Name	Initial Value	Setting Range	Description
888	Free parameter 1	9999	0 to 9999	Any values can be set. Data is held even if the inverter power is turned off.
889	Free parameter 2	9999	0 to 9999	

The above parameters can be set when *Pr. 160 Extended function display selection* = "0". *(Refer to page 162)*
The above parameters allow its setting to be changed during operation in any operation mode even if "0" (initial value) is set in *Pr.77 Parameter write selection*.

REMARKS

Pr. 888 and Pr. 889 do not influence the inverter operation.

上正科技有限公司
購買、維修 此手冊零組件
電話： 037-466333
Email: service@repairtw.com
Line id: @zzzz
www.repairtw.com

4.22 Setting the parameter unit and operation panel

Purpose	Parameter that should be Set		Refer to Page
Selection of rotation direction by RUN of the operation panel	RUN key rotation direction selection	Pr. 40	237
Switch the display language of the parameter unit	PU display language selection	Pr. 145	237
Use the setting dial of the operation panel like a potentiometer for frequency setting Key lock of operation panel	Operation panel operation selection	Pr. 161	238
Change the magnitude of change of frequency setting by the setting dial of the operation panel	Magnitude of frequency change setting	Pr. 295	240
Control of the parameter unit buzzer	PU buzzer control	Pr. 990	241
Adjust LCD contrast of the parameter unit	PU contrast adjustment	Pr. 991	241

4.22.1 RUN key rotation direction selection (Pr. 40)

Used to choose the direction of rotation by operating RUN of the operation panel.

Parameter Number	Name	Initial Value	Setting Range	Description
40	RUN key rotation direction selection	0	0	Forward rotation
			1	Reverse rotation

The above parameter can be set when *Pr. 160 Extended function display selection* = "0". *(Refer to page 162)*

上正科技有限公司
購買、維修 此手冊零組件
電話： 037-466333
Email: service@repairtw.com
Line id: @zzzz
www.repairtw.com

4.22.2 PU display language selection(Pr.145)

You can switch the display language of the parameter unit (FR-PU04/FR-PU07) to another.

Parameter Number	Name	Initial Value	Setting Range	Description
145	PU display language selection	1	0	Japanese
			1	English
			2	German
			3	French
			4	Spanish
			5	Italian
			6	Swedish
			7	Finnish

The above parameter can be set when *Pr. 160 Extended function display selection* = "0". *(Refer to page 162)*

4.22.3 Operation panel frequency setting/key lock operation selection (Pr. 161)

The setting dial of the operation panel can be used for setting like a potentiometer.
The key operation of the operation panel can be disabled.

Parameter Number	Name	Initial Value	Setting Range	Description	
161	Frequency setting/key lock operation selection	0	0	Setting dial frequency setting mode	Key lock invalid
			1	Setting dial potentiometer mode	
			10	Setting dial frequency setting mode	Key lock valid
			11	Setting dial potentiometer mode	

The above parameter can be set when *Pr. 160 Extended function display selection* = "0". *(Refer to page 162)*

(1) Using the setting dial like a potentiometer to set the frequency

Operation example Changing the frequency from 0Hz to 60Hz during operation

Operation — Display

1. Screen at powering on
   The monitor display appears.

PU indication is lit.

2. Press PU/EXT to choose the PU operation mode.

PRM indication is lit.

3. Press MODE to choose the parameter setting mode.

(The parameter number read previously appears.)

上正科技有限公司
購買、維修、手冊零組件
電話： 037-466333
Email: service@repairtw.com
Line id: @repair
www.repairtw.com

4. Turn until P. 160 *(Pr. 160)* appears.

5. Press SET to read the present set value.
   "9999"(initial value) appears.

6. Turn to change it to the set value "0".

7. Press SET to set.

Flicker Parameter setting complete!!

8. Change *Pr. 161* to the setting value of " 1 " in the similar manner. (Refer to step 4 to 7.)

Flicker Parameter setting complete!!

9. Mode/monitor check
   Press MODE twice to choose the monitor/frequency monitor.

10. Press RUN to start the inverter.

11. Turn until "60.00" appears.
    The flickering frequency is the set frequency.
    You need not press SET.

The frequency flickers for about 5s.

REMARKS

- If the display changes from flickering "60.00" to "0.00", the setting of *Pr. 161 Frequency setting/key lock operation selection* may not be "1".
- Independently of whether the inverter is running or at a stop, the frequency can be set by merely turning the dial.
- When the frequency is changed, it will be stored in EEPROM as the set frequency after 10s.

(2) Disable the setting dial and key operation of the operation panel (Press [MODE] long (2s))

•Operation using the setting dial and key of the operation panel can be invalid to prevent parameter change, and unexpected start or frequency setting.

•Set "10 or 11" in *Pr. 161*, then press (MODE) for 2s to make the setting dial and key operation invalid.

•When the setting dial and key operation are invalid, HOLd appears on the operation panel. If dial or key operation is attempted while dial and key operation are invalid, HOLd appears. (When dial or key is not touched for 2s, monitor display appears.)

•To make the setting dial and key operation valid again, press (MODE) for 2s.

REMARKS

- Even if the setting dial and key operation are disabled, the monitor display and (STOP RESET) are valid.

NOTE

- **Release the operation lock to release the PU stop by key operation.**

上正科技有限公司
購買、維修 此手冊零組件
電話： 037-466333
Email: service@repairtw.com
Line id: @zzzz
www.repairtw.com

4.22.4 Magnitude of frequency change setting (Pr. 295)

When setting the set frequency with the setting dial, frequency changes in 0.01Hz increments in the initial status. Setting this parameter increases the magnitude of frequency which changes according to the rotated amount of the setting dial, improving operability.

Parameter Number	Name	Initial Value	Setting Range	Description
295	Magnitude of frequency change setting	0	0	Function invalid
			0.01	The minimum varying width when the set frequency is changed by the setting dial can be set.
			0.1	
			1	
			10	

The above parameter can be set when *Pr. 160 Extended function display selection* = "0". *(Refer to page 162)*

(1) Basic operation

When a value other than "0" is set in *Pr. 295*, the minimum varying width when the set frequency is changed by the setting dial can be set.

For example, when "1.00Hz" is set in *Pr. 295*, one click (one dial gauge) of the setting dial changes the frequency in increments of 1.00Hz→2.00Hz→3.00Hz.

When *Pr. 295* = "1"

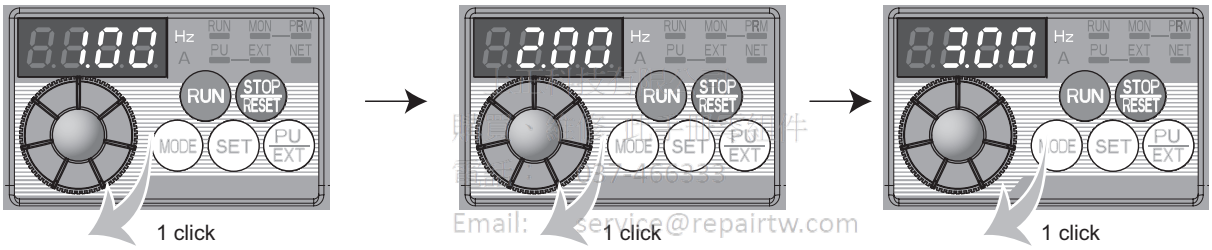

*One rotation of the setting dial equals to 24 clicks (24 dial gauses).

Email: service@repairtw.com
Line id: @zzzz
www.repairtw.com

REMARKS

- When machine speed display is selected with *Pr. 37*, the minimum increments of the magnitude of change is determined by *Pr.295* as well. Note that the setting value may differ as speed setting changes the set machine speed and converts it to the speed dislay again.
- When the set frequency (speed) is 100 or more, frequency is displayed in 0.1 increments. Therefore, the minimum varying width is 0.1 even when *Pr. 295* < 0.1.
- When the machine speed setting is 1000 or more, frequency is displayed in 1 increments. Therefore, the minimum varying width is 1 even when *Pr. 295* < 1.

NOTE

- **For *Pr. 295* , unit is not displayed .**
- **This parameter is valid only in the set frequency mode. When other frequency-related parameters are set, it is not activated.**
- **When 10 is set, frequency setting changes in 10Hz increments. Be cautions for the excess speed. (in potentiometer mode)**

4.22.5 Buzzer control (Pr. 990)

You can make the buzzer "beep" when you press the key of the parameter unit (FR-PU04/FR-PU07).

Parameter Number	Name	Initial Value	Setting Range	Description
990	PU buzzer control	1	0	Without buzzer
			1	With buzzer

The above parameter can be set when *Pr. 160 Extended function display selection* = "0". *(Refer to page 162)*

The above parameter allow its setting to be changed during operation in any operation mode even if "0" (initial value) is set in *Pr. 77 Parameter write selection*.

4.22.6 PU contrast adjustment (Pr. 991)

Contrast adjustment of the LCD of the parameter unit (FR-PU04/FR-PU07) can be performed.
Decreasing the setting value makes contrast light.

Parameter Number	Name	Initial Value	Setting Range	Description
991	PU contrast adjustment	58	0 to 63	0: Light ↓ 63: Dark

The above parameter is displayed as simple mode parameter only when the parameter unit FR-PU04/FR-PU07 is connected.

The above parameter allow its setting to be changed during operation in any operation mode even if "0" (initial value) is set in *Pr. 77 Parameter write selection*.

工控科技有限公司
購買、維修 此手冊零組件
電話： 037-466333
Email: service@repairtw.com
Line id: @zzzz
www.repairtw.com

4.23 Parameter clear/ All parameter clear

POINT

- Set "1" in *Pr.CL Parameter clear, ALLC all parameter clear* to initialize all parameters. (Parameters are not cleared when "1" is set in *Pr. 77 Parameter write selection*.)
- Refer to the extended parameter list on *page 56* for parameters cleared with this operation.

Operation	Display
1. Screen at powering on The monitor display appears.	0.00 Hz MON EXT
2. Press PU/EXT to choose the PU operation mode.	PU/EXT ⇨ 0.00 PU PU indication is lit.
3. Press MODE to choose the parameter setting mode.	MODE ⇨ P. 0 PRM PRM indication is lit. (The parameter number read previously appears.)
4. Turn ◎ until Pr.CL (ALLC) appears.	◎ ⇨ Parameter clear Pr.CL All parameter clear ALLC
5. Press SET to read the present set value. "0"(initial value) appears.	SET ⇨ 0
6. Turn ◎ to change it to the set value "1".	◎ ⇨ 1
7. Press SET to set.	SET ⇨ 1 Parameter clear Pr.CL All parameter clear ALLC **Flicker ··· Parameter setting complete!!**

上正科技有限公司
購買、維修此手冊零組件
電話： 037-466333
Email: service@repairtw.com
Line id: @zzzz
www.repairtw.com

- Turn ◎ to read another parameter.
- Press SET to show the setting again.
- Press SET twice to show the next parameter.

Setting	Description
0	Not executed.
1	Set parameters back to the initial values. (Parameter clear sets back all parameters except *calibration parameters, terminal function selection parameters* to the initial values.) *Refer to the parameter list on page 56* for availability of parameter clear and all parameter clear.

REMARKS

? 1 and Er4 are displayed alternately ... Why?

☞ The inverter is not in the PU operation mode.

☞ Is PU connector used?

1. Press PU/EXT. [PU] is lit and the monitor (4 digit LED) displays "1". (When *Pr. 79* = "0" (initial value))
2. Carry out operation from step 6 again.

4.24 Initial value change list

Displays and sets the parameters changed from the initial value.

Operation — **Display**

1. Screen at powering on
   The monitor display appears.

2. Press PU/EXT to choose the PU operation mode.

PU indication is lit.

3. Press MODE to choose the parameter setting mode.

PRM indication is lit.

(The parameter number read previously appears.)

4. Turn ◎ until Pr.CH appears.

5. Pressing SET changes to the initial value change list screen.

* It may take several seconds for creating the initial value change list. "P.---" flickers while creating the list.

6. Turning ◎ displays the parameter number changed.

上正科技有限公司
購買 維修 此冊零組件
電話： 03-466333
Email: service@repairtw.com
Line id: @zzzz
www.repairtw.com

●Press SET to read the present set value.

Turn ◎ and press SET to change the setting
(refer to step 6 and 7 on page 55)

Flicker Parameter setting complete!!

●Turn ◎ to read another parameter.

●The display returns to P.--- after all parameters are displayed.

7. Pressing SET in P.--- status returns to the parameter setting mode.

- Turning ◎ sets other parameters.
- Pressing SET displays the change list again.

NOTE

- **Calibration parameters *(C1 (Pr. 901) to C7 (Pr. 905))* are not displayed even they are changed from the initial settings.**
- **Only simple mode parameter is displayed when simple mode is set (*Pr. 160* = "9999" (initial value))**
- ***Pr. 160* is displayed independently of whether the setting value is changed or not.**
- **When parameter setting is changed after creating the initial value change list, the setting will be reflected to the initial value change list next time.**

Parameters referred to

Pr. 160 Extended function display selection ☞ *Refer to page 162*
C1 (Pr. 901) AM terminal calibration ☞ *Refer to page 134*
C2(Pr. 902) to C7(Pr. 905) (Frequency setting bias/gain parameter) ☞ *Refer to page 153*

4.25 Check and clear of the faults history

(1) Check for the faults history

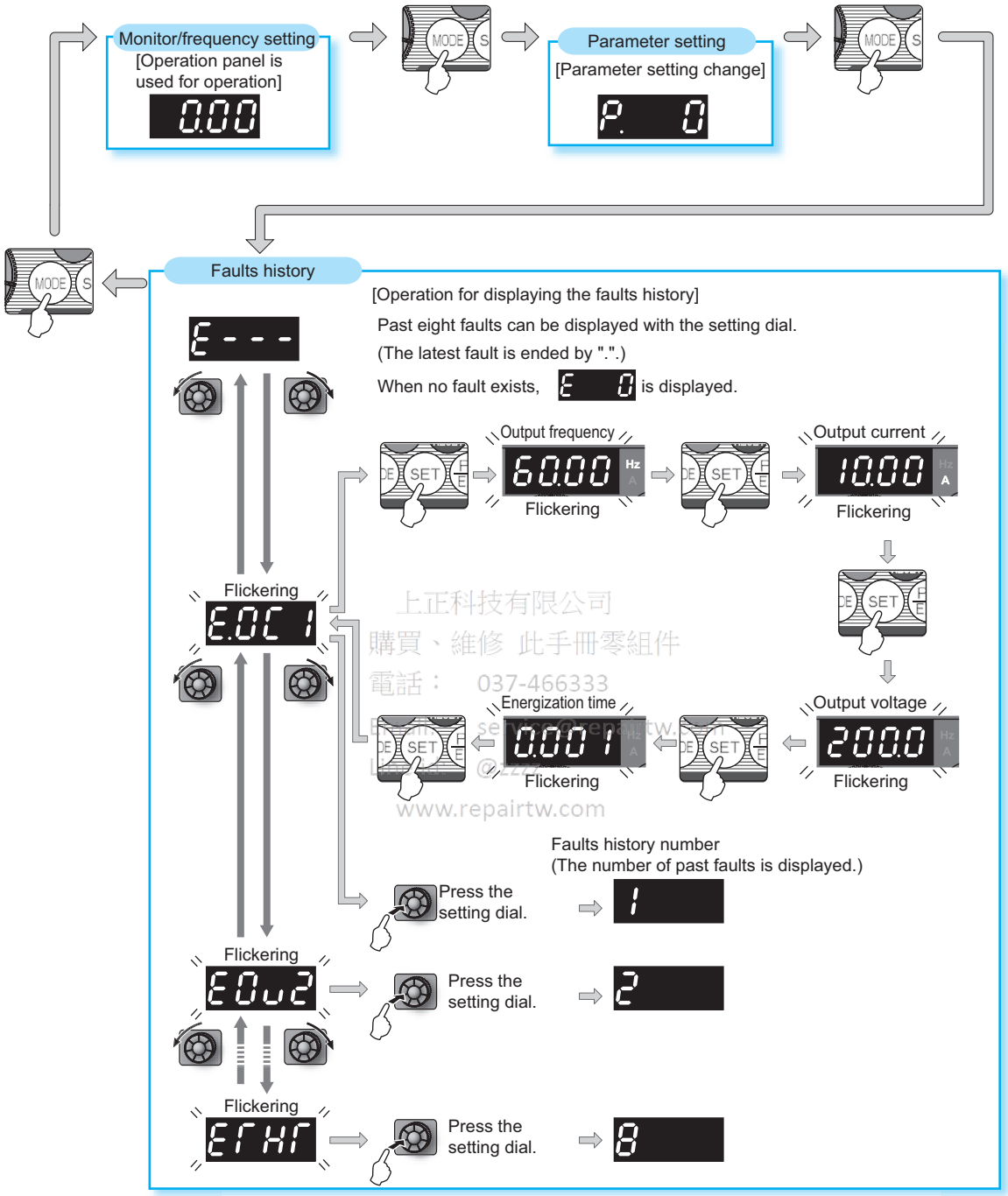

上正科技有限公司
購買、維修 此手冊零組件
電話： 037-466333
www.repairtw.com

(2) Clearing procedure

POINT

- Set "1" in *Er.CL Fault history clear* to clear the faults history. (Parameters are not cleared when "1" is set in *Pr. 77 Parameter write selection*.)

Operation		Display
1. Screen at powering on The monitor display appears.		0.00 Hz MON EXT PRM indication is lit.
2. Press MODE to choose the parameter setting mode.	MODE	P. 0 PRM (The parameter number read previously appears.)
3. Turn ◎ until Er.CL (faults history clear) appears.	◎	Er.CL
4. Press SET to read the present set value. "0" (initial value) appears.	SET	0
5. Turn ◎ to change it to the set value " 1".	◎	1
6. Press SET to set.	SET	1 Er.CL **Flicker...Faults history clear complete!!**

- Turn ◎ to read another parameter.
- Press SET to show the setting again.
- Press SET twice to show the next parameter.

上正科技有限公司
購買、維修 此手冊零組件
電話 037-466333
Email service@repairtw.com
Line id @zzzz
www.repairtw.com

Parameters referred to

Pr. 77 Parameter write selection ☞ *Refer to page 161*

MEMO

上正科技有限公司
購買、維修 此手冊零組件
電話： 037-466333
Email: service@repairtw.com
Line id: @zzzz
www.repairtw.com

5 TROUBLESHOOTING

This chapter provides the "TROUBLESHOOTING" of this product.
Always read the instructions before using the equipment

5.1 Reset method of protective function 248
5.2 List of fault or alarm indications 249
5.3 Causes and corrective actions 250
5.4 Correspondences between digital and actual characters 259
5.5 Check first when you have some troubles 260

上位科技有限公司
購買、維修、比手冊零組件
電話： 037-462822
Email: service@repairtw.com
Line id: @zzzz
www.repairtw.com

When a fault occurs in the inverter, the inverter trips and the PU display automatically changes to any of the following fault or alarm indications.

If the fault does not correspond to any of the following faults or if you have any other problem, please contact your sales representative.

- Retention of fault output signal... When the magnetic contactor (MC) provided on the input side of the inverter is opened when a fault occurs, the inverter's control power will be lost and the fault output will not be held.
- Fault or alarm indication ..... When a fault or alarm occurs, the operation panel display automatically switches to the fault or alarm indication.
- Resetting method ..... When a fault occurs, the inverter output is kept stopped. Unless reset, therefore, the inverter cannot restart. *(Refer to page 248)*
- When any fault occurs, take the appropriate corrective action, then reset the inverter, and resume operation.
  Not doing so may lead to the inverter fault and damage.

Inverter fault or alarm indications are roughly divided as below.

(1) Error message
A message regarding operational fault and setting fault by the operation panel and parameter unit (FR-PU04 /FR-PU07) is displayed. The inverter does not trip.

(2) Warnings
The inverter does not trip even when a warning is displayed. However, failure to take appropriate measures will lead to a fault.

(3) Alarm
The inverter does not trip. You can also output an alarm signal by making parameter setting.

(4) Fault
When a fault occurs, the inverter trips and a fault signal is output.

上正科技有限公司
購買、維修、比較、冊零組件
電話： 037-466333
Email: service@repairtw.com
Line id: @zzzz
www.repairtw.com

5.1 Reset method of protective function

(1) Resetting the inverter

The inverter can be reset by performing any of the following operations. Note that the internal thermal integrated value of the electronic thermal relay function and the number of retries are cleared (erased) by resetting the inverter.

Recover about 1s after reset is cancelled.

Operation 1: ..... Using the operation panel, press STOP/RESET to reset the inverter.
(This may only be performed when a fault occurs (*Refer to page 253* for fault.))

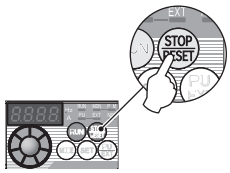

Operation 2: ..... Switch power off once, then switch it on again.

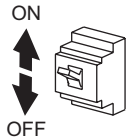

Operation 3: ..... Turn on the reset signal (RES) for more than 0.1s. (If the RES signal is kept on, "Err." appears (flickers) to indicate that the inverter is in a reset status.)

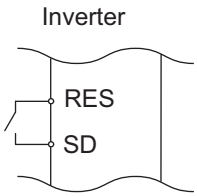

5.2 List of fault or alarm indications

	Operation Panel Indication		Name	Refer to Page
Error message	E---	E---	Faults history	244
	HOLd	HOLD	Operation panel lock	250
	LOCd	LOCd	Password locked	250
	Er1 to Er4	Er1 to 4	Parameter write error	250
	Err.	Err.	Inverter reset	251
Warnings	OL	OL	Stall prevention (overcurrent)	251
	oL	oL	Stall prevention (overvoltage)	251
	rb	RB	Regenerative brake prealarm	252
	TH	TH	Electronic thermal relay function prealarm	252
	PS	PS	PU stop	252
	MT	MT	Maintenance signal output	252
	Uv	UV	Undervoltage	252
	SA	SA	Safety stop	253
Alarm	Fn	FN	Fan fault	253
Fault	E.OC1	E.OC1	Overcurrent trip during acceleration	253
	E.OC2	E.OC2	Overcurrent trip during constant speed	253
	E.OC3	E.OC3	Overcurrent trip during deceleration or stop	254
	E.OV1	E.OV1	Regenerative overvoltage trip during acceleration	254
	E.OV2	E.OV2	Regenerative overvoltage trip during constant speed	254
	E.OV3	E.OV3	Regenerative overvoltage trip during deceleration or stop	254
	E.THT	E.THT	Inverter overload trip (electronic thermal relay function)	255
	E.THM	E.THM	Motor overload trip (electronic thermal relay function)	255
	E.FIN	E.FIN	Fin overheat	255

	Operation Panel Indication		Name	Refer to Page
Fault	E.ILF	E.ILF *	Input phase loss	256
	E.OLT	E.OLT	Stall prevention	256
	E. bE	E. BE	Brake transistor alarm detection	256
	E. GF	E.GF	Output side earth (ground) fault overcurrent at start	256
	E. LF	E.LF	Output phase loss	256
	E.OHT	E.OHT	External thermal relay operation	257
	E.PTC	E.PTC*	PTC thermistor operation	257
	E. PE	E.PE	Parameter storage device fault	257
	E.PUE	E.PUE	PU disconnection	257
	E.rET	E.RET	Retry count excess	257
	E. 5 / E.CPU	E.5 / E.CPU	CPU fault	258
	E.CDO	E.CDO*	Output current detection value exceeded	258
	E.IOH	E.IOH *	Inrush current limit circuit fault	258
	E.AIE	E.AIE *	Analog input fault	258
	E.SAF	E.SAF *	Safety circuit fault	258

* If a fault occurs when using with the FR-PU04, "Fault 14" is displayed on the FR-PU04.

上正科技有限公司
購買、維修 此手冊零組
電話： 037-466333
Email: service@repairtw.com
Line id: @zzzz
www.repairtw.com

5.3 Causes and corrective actions

(1) Error message

A message regarding operational troubles is displayed. Output is not shutoff.

Operation panel indication	HOLD	HOLd
Name	Operation panel lock	
Description	Operation lock mode is set. Operation other than (STOP RESET) is invalid. *(Refer to page 239)*	
Check point	—	
Corrective action	Press (MODE) for 2s to release lock.	

Operation panel indication	LOCd	LOCd
Name	Password locked	
Description	Password function is active. Display and setting of parameter is restricted.	
Check point	—	
Corrective action	Enter the password in *Pr. 297 Password lock/unlock* to unlock the password function before operating. *(Refer to page 163).*	

Operation panel indication	Er1	Er 1
Name	Write disable error	
Description	1. You attempted to make parameter setting when *Pr. 77 Parameter write selection* has been set to disable parameter write. 2. Frequency jump setting range overlapped. 3. The PU and inverter cannot make normal communication.	
Check point	1. Check the setting of *Pr. 77 Parameter write selection*. *(Refer to page 161).* 2. Check the settings of *Pr. 31 to Pr. 36 (frequency jump)*. *(Refer to page 84)* 3. Check the connection of the PU and inverter.	

上正科技有限公司
專買、維修、供手冊零組件
電話: 037-105035
Email: service@repairtw.com
Line id: @zzzz
www.repairtw.com

Operation panel indication	Er2	Er2
Name	Write error during operation	
Description	When parameter write was performed during operation with a value other than "2" (writing is enabled independently of operation status in any operation mode) is set in *Pr. 77* and the STF (STR) is on.	
Check point	1. Check the *Pr. 77* setting. *(Refer to page 161).* 2. Check that the inverter is not operating.	
Corrective action	1. Set "2" in *Pr. 77*. 2. After stopping operation, make parameter setting.	

Operation panel indication	Er3	Er3
Name	Calibration error	
Description	Analog input bias and gain calibration values are too close.	
Check point	Check the settings of *C3, C4, C6 and C7 (calibration functions)*. *(Refer to page 153).*	

Operation panel indication	Er4	Er4
Name	Mode designation error	
Description	You attempted to make parameter setting in the NET operation mode when *Pr. 77* is not 2.	
Check point	1. Check that operation mode is PU operation mode. 2. Check the *Pr. 77* setting. *(Refer to page 161).*	
Corrective action	1. After setting the operation mode to the "PU operation mode", make parameter setting. *(Refer to page 165)* 2. After setting "2" in *Pr. 77*, make parameter setting.	

Operation panel indication	Err.	Err.
Name	Inverter reset	
Description	• Executing reset using RES signal, or reset command from communication or PU • Displays at powering off.	
Corrective action	• Turn off the reset command	

(2) Warnings

When a warning occurs, the output is not shut off.

Operation panel indication	OL	OL	FR-PU04 FR-PU07	OL
Name	Stall prevention (overcurrent)			
Description	During acceleration	When the output current of the inverter exceeds the stall prevention operation level (*Pr. 22 Stall prevention operation level*, etc.), this function stops the increase in frequency until the overload current decreases to prevent the inverter from resulting in overcurrent trip. When the overload current has reduced below stall prevention operation level, this function increases the frequency again.		
	During constant-speed operation	When the output current of the inverter exceeds the stall prevention operation level (*Pr. 22 Stall prevention operation level*, etc.), this function reduces frequency until the overload current decreases to prevent the inverter from resulting in overcurrent trip. When the overload current has reduced below stall prevention operation level, this function increases the frequency up to the set value.		
	During deceleration	When the output current of the inverter exceeds the stall prevention operation level (*Pr. 22 Stall prevention operation level*, etc.), this function stops the decrease in frequency until the overload current decreases to prevent the inverter from resulting in overcurrent trip. When the overload current has decreased below stall prevention operation level, this function decreases the frequency again.		
Check point	1. Check that the *Pr. 0 Torque boost* setting is not too large. 2. Check that the *Pr. 7 Acceleration time* and *Pr. 8 Deceleration time* settings are not too small. 3. Check that the load is not too heavy. 4. Are there any failure in peripheral devices? 5. Check that the *Pr. 13 Starting frequency* is not too large. 6. Check that the *Pr. 22 Stall prevention operation level* is appropriate			
Corrective action	1. Increase or decrease the *Pr. 0 Torque boost* setting by 1% and check the motor status. *(Refer to page 73)* 2. Set a larger value in *Pr. 7 Acceleration time* and *Pr. 8 Deceleration time*. *(Refer to page 96)* 3. Reduce the load weight. 4. Try General-purpose magnetic flux vector control. 5. Change the *Pr. 14 Load pattern selection* setting. 6. Set stall prevention operation current in *Pr. 22 Stall prevention operation level*. (The initial value is 150%.) The acceleration/deceleration time may change. Increase the stall prevention operation level with *Pr. 22 Stall prevention operation level*, or disable stall prevention with *Pr. 156 Stall prevention operation selection*. (Operation at OL occurrence can be selected using *Pr. 156*.)			

上玉科技有限公司
購買、維修 此手冊零組件
電話: 886-937-46631
Email: service@repairtw.com
Line id: @zzzz
www.repairtw.com

Operation panel indication	oL	oL	FR-PU04 FR-PU07	oL
Name	Stall prevention (overvoltage)			
Description	During deceleration	• If the regenerative energy of the motor becomes excessive to exceed the regenerative energy consumption capability, this function stops the decrease in frequency to prevent overvoltage trip. As soon as the regenerative energy has reduced, deceleration resumes. • If the regenerative energy of the motor becomes excessive when regeneration avoidance function is selected (*Pr. 882* =1), this function increases the speed to prevent overvoltage trip. *(Refer to page 226)*.		
Check point	• Check for sudden speed reduction. • Check that regeneration avoidance function *(Pr. 882, Pr. 883, Pr. 885, Pr. 886)* is used. *(Refer to page 226)*.			
Corrective action	The deceleration time may change. Increase the deceleration time using *Pr. 8 Deceleration time*.			

Operation panel indication	PS	PS	FR-PU04 FR-PU07	PS
Name	PU stop			
Description	Stop with (STOP/RESET) of the PU is set in *Pr. 75 Reset selection/disconnected PU detection/PU stop selection*. (For *Pr. 75 refer to page 158* .)			
Check point	Check for a stop made by pressing (STOP/RESET) of the operation panel.			
Corrective action	Turn the start signal off and release with (PU/EXT).			

Operation panel indication	RB	rb	FR-PU04 FR-PU07	RB
Name	Regenerative brake prealarm			
Description	Appears if the regenerative brake duty reaches or exceeds 85% of the *Pr. 70 Special regenerative brake duty* value. When the setting of *Pr. 70 Special regenerative brake duty* is the initial value (*Pr. 70* = "0"), this warning does not occur. If the regenerative brake duty reaches 100%, a regenerative overvoltage (E. OV_) occurs. The RBP signal can be simultaneously output with the [RB] display. For the terminal used for the RBP signal output, assign the function by setting "7 (positive logic) or 107 (negative logic)" in *Pr. 190 or Pr. 192 (output terminal function selection)*. *(Refer to page 119).*			
Check point	1. Check that the brake resistor duty is not high. 2. Check that the *Pr. 30 Regenerative function selection* and *Pr. 70 Special regenerative brake duty* settings are correct.			
Corrective action	1. Increase the deceleration time. 2. Check that the *Pr. 30 Regenerative function selection* and *Pr. 70 Special regenerative brake duty* settings.			

Operation panel indication	TH	TH	FR-PU04 FR-PU07	TH
Name	Electronic thermal relay function prealarm			
Description	Appears if the cumulative value of the *Pr. 9 Electronic thermal O/L relay* reaches or exceeds 85% of the preset level. If it reaches 100% of the *Pr. 9 Electronic thermal O/L relay* setting, a motor overload trip (E. THM) occurs. The THP signal can be simultaneously output with the [TH] display. For the terminal used for THP signal output, assign the function by setting "8 (positive logic) or 108 (negative logic)" in *Pr. 190 or Pr. 192 (output terminal function selection)*. *(Refer to page 119).*			
Check point	1. Check for large load or sudden acceleration. 2. Is the *Pr. 9 Electronic thermal O/L relay* setting is appropriate? *(Refer to page 100)*			
Corrective action	1. Reduce the load and frequency of operation. 2. Set an appropriate value in *Pr. 9 Electronic thermal O/L relay*. *(Refer to page 100)*			

Operation panel indication	MT	MT	FR-PU04 FR-PU07	—— MT
Name	Maintenance signal output			
Description	Indicates that the cumulative energization time of the inverter has reached a given time. When the setting of *Pr. 504 Maintenance timer alarm output set time* is the initial value (*Pr. 504* = "9999"), this warning does not occur.			
Check point	The *Pr. 503 Maintenance timer* setting is larger than the *Pr. 504 Maintenance timer alarm output set time* setting. *(Refer to page 233).*			
Corrective action	Setting "0" in *Pr. 503 Maintenance timer* erases the signal.			

Operation panel indication	UV	Uv	FR-PU04 FR-PU07	——
Name	Undervoltage			
Description	If the power supply voltage of the inverter decreases, the control circuit will not perform normal functions. In addition, the motor torque will be insufficient and/or heat generation will increase. To prevent this, if the power supply voltage decreases below about 115VAC (230VAC for 400V class), this function stops the inverter output and displays Uv. An alarm is reset when the voltage returns to normal.			
Check point	Check that the power supply voltage is normal.			
Corrective action	Check the power supply system equipment such as power supply.			

Operation panel indication	SA	SA	FR-PU04 FR-PU07	—
Name	Safety stop			
Description	Appears when safety stop function is activated (during output shutoff).			
Check point	If the indication appears when safety stop function is not used, check that shorting wires between S1 and SC, S2 and SC are connected.			
Corrective action	If the indication appears when safety stop function is not used, short between S1 and SC, S2 and SC with shorting wires.			

(3) Alarm

When an alarm occurs, the output is not shut off. You can also output an alarm signal by making parameter setting. (Set "98" in *Pr. 190 or Pr. 192 (output terminal function selection)*. *Refer to page 119*).

Operation panel indication	FN	Fn	FR-PU04 FR-PU07	FN
Name	Fan fault			
Description	For the inverter that contains a cooling fan, Fn appears on the operation panel when the cooling fan stops due to an alarm or different operation from the setting of *Pr. 244 Cooling fan operation selection*.			
Check point	Check the cooling fan for an alarm.			
Corrective action	Check for fan alarm. Please contact your sales representative.			

(4) Fault

When a fault occurs, the inverter trips and a fault signal is output.

Operation panel indication	E.OC1	E.OC1	FR-PU04 FR-PU07	OC During Acc
Name	Overcurrent trip during acceleration			
Description	When the inverter output current reaches or exceeds approximately 200% of the rated current during acceleration, the protective circuit is activated and the inverter trips.			
Check point	1. Check for sudden acceleration. 2. Check that the downward acceleration time is not long in vertical lift application. 3. Check for output short-circuit/ground fault. 4. Check that the *Pr. 3 Base frequency* setting is not 60Hz when the motor rated frequency is 50Hz. 5. Check that stall prevention operation is appropriate. 6. Check that regeneration is not performed frequently. (Check that the output voltage becomes larger than the V/F reference value at regeneration and overcurrent occurs due to increase in motor current.)			
Corrective action	1. Increase the acceleration time. (Shorten the downward acceleration time in vertical lift application.) 2. When "E.OC1" is always lit at starting, disconnect the motor once and start the inverter. If "E.OC1" is still lit, contact your sales representative. 3. Check the wiring to make sure that output short circuit/ground fault does not occur. 4. Set 50Hz in *Pr. 3 Base frequency*. *(Refer to page 85)* 5. Perform stall prevention operation appropriately. *(Refer to page 79)*. 6. Set base voltage (rated voltage of the motor, etc.) in *Pr. 19 Base frequency voltage*. *(Refer to page 85)*			

上河科技公司
備品、維修、此手冊零組件
電話: 886-2-26516333
Email: service@repairtw.com
www.repairtw.com

Operation panel indication	E.OC2	E.OC2	FR-PU04 FR-PU07	Stedy Spd OC
Name	Overcurrent trip during constant speed			
Description	When the inverter output current reaches or exceeds approximately 200% of the rated current during constant speed operation, the protective circuit is activated and the inverter trips.			
Check point	1. Check for sudden load change. 2. Check for output short-circuit/ground fault. 3. Check that stall prevention operation is appropriate.			
Corrective action	1. Keep load stable. 2. Check the wiring to make sure that output short circuit/ground fault does not occur. 3. Perform stall prevention operation appropriately. *(Refer to page 79)*.			

Operation panel indication	E.OC3	E.OC3	FR-PU04 FR-PU07	OC During Dec
Name	Overcurrent trip during deceleration or stop			
Description	When the inverter output current reaches or exceeds approximately 200% of the rated inverter current during deceleration (other than acceleration or constant speed), the protective circuit is activated and the inverter trips.			
Check point	1. Check for sudden speed reduction. 2. Check for output short-circuit/ground fault. 3. Check for too fast operation of the motor's mechanical brake. 4. Check that stall prevention operation is appropriate.			
Corrective action	1. Increase the deceleration time. 2. Check the wiring to make sure that output short circuit/ground fault does not occur. 3. Check the mechanical brake operation. 4. Perform stall prevention operation appropriately. *(Refer to page 79).*			

Operation panel indication	E.OV1	E.OV1	FR-PU04 FR-PU07	OV During Acc
Name	Regenerative overvoltage trip during acceleration			
Description	If regenerative energy causes the inverter's internal main circuit DC voltage to reach or exceed the specified value, the protective circuit is activated and the inverter trips. The circuit may also be activated by a surge voltage produced in the power supply system.			
Check point	1. Check for too slow acceleration. (e.g. during downward acceleration in vertical lift load) 2. Check that the setting of *Pr. 22 Stall prevention operation level* is not too small.			
Corrective action	1. • Decrease the acceleration time. • Use regeneration avoidance function *(Pr. 882, Pr. 883, Pr. 885, Pr. 886). (Refer to page 226).* 2. Set the *Pr.22 Stall prevention operation level* correctly.			

Operation panel indication	E.OV2	E.OV2	FR-PU04 FR-PU07	Stedy Spd OV
Name	Regenerative overvoltage trip during constant speed			
Description	If regenerative energy causes the inverter's internal main circuit DC voltage to reach or exceed the specified value, the protective circuit is activated to stop the inverter output. The circuit may also be activated by a surge voltage produced in the power supply system.			
Check point	1. Check for sudden load change. 2. Check that the setting of *Pr. 22 Stall prevention operation level* is not too small.			
Corrective action	1. • Keep load stable. • Use regeneration avoidance function *(Pr. 882, Pr. 883, Pr. 885, Pr. 886). (Refer to page 226).* • Use the brake resistor, brake unit or power regeneration common converter (FR-CV) as required. 2. Set the *Pr.22 Stall prevention operation level* correctly.			

Operation panel indication	E.OV3	E.OV3	FR-PU04 FR-PU07	OV During Dec
Name	Regenerative overvoltage trip during deceleration or stop			
Description	If regenerative energy causes the inverter's internal main circuit DC voltage to reach or exceed the specified value, the protective circuit is activated to stop the inverter output. The circuit may also be activated by a surge voltage produced in the power supply system.			
Check point	Check for sudden speed reduction.			
Corrective action	• Increase the deceleration time. (Set the deceleration time which matches the moment of inertia of the load) • Make the brake cycle longer. • Use regeneration avoidance function *(Pr. 882, Pr. 883, Pr. 885, Pr. 886). (Refer to page 226).* • Use the brake resistor, brake unit or power regeneration common converter (FR-CV) as required.			

Operation panel indication	E.THT	E.THT	FR-PU04 FR-PU07	Inv. Overload
Name	Inverter overload trip (electronic thermal relay function)			
Description	If the temperature of the output transistor element exceeds the protection level under the condition that a current not less than the rated inverter current flows and overcurrent trip does not occur (200% or less), the electronic thermal relay activates to stop the inverter output. (Overload capacity 150% 60s, 200% 0.5s)			
Check point	1. Check that acceleration/deceleration time is not too short. 2. Check that torque boost setting is not too large (small). 3. Check that load pattern selection setting is appropriate for the load pattern of the using machine. 4. Check the motor for use under overload. 5. Check for too high surrounding air temperature.			
Corrective action	1. Increase acceleration/deceleration time. 2. Adjust the torque boost setting. 3. Set the load pattern selection setting according to the load pattern of the using machine. 4. Reduce the load weight. 5. Set the surrounding air temperature to within the specifications.			

Operation panel indication	E.THM	E.THM	FR-PU04 FR-PU07	Motor Ovrload
Name	Motor overload trip (electronic thermal relay function) *1			
Description	The electronic thermal relay function in the inverter detects motor overheat due to overload or reduced cooling capability during constant-speed operation, and pre-alarm (TH display) is output when the integrated value reaches 85% of the *Pr. 9 Electronic thermal O/L relay* setting, and the protection circuit is activated to stop the inverter output when the integrated value reaches the specified value. When running a special motor such as a multi-pole motor or multiple motors, provide a thermal relay on the inverter output side since such motor(s) cannot be protected by the electronic thermal relay function.			
Check point	1. Check the motor for use under overload. 2. Check that the setting of *Pr. 71 Applied motor* for motor selection is correct. *(Refer to page 103).* 3. Check that stall prevention operation setting is correct.			
Corrective action	1. Reduce the load weight. 2. For a constant-torque motor, set the constant-torque motor in *Pr. 71 Applied motor*. 3. Check that stall prevention operation setting is correct. *(Refer to page 79).*			

*1 Resetting the inverter initializes the internal thermal integrated data of the electronic thermal relay function.

Email: service@repairtw.com
www.repairtw.com

Operation panel indication	E.FIN	E.FIN	FR-PU04 FR-PU07	H/Sink O/Temp
Name	Fin overheat			
Description	If the heatsink overheats, the temperature sensor is actuated and the inverter trips. The FIN signal can be output when the temperature becomes approximately 85% of the heatsink overheat protection operation temperature. For the terminal used for the FIN signal output, assign the function by setting "26 (positive logic) or 126 (negative logic)" in *Pr. 190 or Pr. 192 (output terminal function selection)*. *(Refer to page 119).*			
Check point	1. Check for too high surrounding air temperature. 2. Check for heatsink clogging. 3. Check that the cooling fan is not stopped (Check that Fn is not displayed on the operation panel).			
Corrective action	1. Set the surrounding air temperature to within the specifications. 2. Clean the heatsink. 3. Replace the cooling fan.			

Operation panel indication	E.ILF	E.ILF	FR-PU04 FR-PU07	Fault 14 Input phase loss
Name	Input phase loss ∗			
Description	Inverter trips when function valid setting (=1) is selected in *Pr. 872 Input phase loss protection selection* and one phase of the three phase power input is lost. *(Refer to page 146).* It may function if phase-to-phase voltage of the three-phase power input becomes largely unbalanced. When the setting of *Pr. 872 Input phase loss protection selection* is the initial value (*Pr. 872* ="0"), this warning does not occur.			
Check point	• Check for a break in the cable for the three-phase power supply input. • Check that phase-to-phase voltage of the three-phase power input is not largely unbalanced.			
Corrective action	• Wire the cables properly. • Repair a break portion in the cable. • Check the *Pr. 872 Input phase loss protection selection* setting. • Set *Pr. 872* = "0" (without input phase loss protection) when three-phase input voltage is largely unbalanced.			

∗ Available only for three-phase power input specification model.

Operation panel indication	E.OLT	E.OLT	FR-PU04 FR-PU07	Stll Prev STP (OL shown during stall prevention operation)
Name	Stall prevention			
Description	If the output frequency has fallen to 1Hz by stall prevention operation and remains for 3s, a fault (E.OLT) appears and the inverter trips. OL appears while stall prevention is being activated.			
Check point	• Check the motor for use under overload. *(Refer to page 80).*			
Corrective action	• Reduce the load weight. (Check the *Pr. 22 Stall prevention operation level* setting.)			

Operation panel indication	E.BE	E.bE	FR-PU04 FR-PU07	Br. Cct. Fault
Name	Brake transistor alarm detection			
Description	When a brake transistor alarm has occurred due to the large regenerative energy from the motor etc., the brake transistor alarm is detected and the inverter trips. In this case, the inverter must be powered off immediately.			
Check point	• Reduce the load inertia. • Check that the frequency of using the brake is proper. • Check that the brake resistor selected is correct.			
Corrective action	Replace the inverter.			

Repair 有限公司
購買、維修 此手冊零組件
電話: 886-4-23703233
Email: service@repairtw.com
Line id: @zzzz
www.repairtw.com

Operation panel indication	E.GF	E.GF	FR-PU04 FR-PU07	Ground Fault
Name	Output side earth (ground) fault overcurrent at start			
Description	The inverter trips if an earth (ground) fault overcurrent flows at start due to an earth (ground) fault that occurred on the inverter's output side (load side). Whether this protective function is used or not is set with *Pr. 249 Earth (ground) fault detection at start*. When the setting of *Pr. 249 Earth (ground) fault detection at start* is the initial value *(Pr. 249 ="0")*, this warning does not occur.			
Check point	Check for a ground fault in the motor and connection cable.			
Corrective action	Remedy the ground fault portion.			

Operation panel indication	E.LF	E.LF	FR-PU04 FR-PU07	E.LF
Name	Output phase loss			
Description	This function stops the inverter output if one of the three phases (U, V, W) on the inverter's output side (load side) is lost. Whether the protective function is used or not is set with *Pr. 251 Output phase loss protection selection*.			
Check point	• Check the wiring. (Check that the motor is normal.) • Check that the capacity of the motor used is not smaller than that of the inverter.			
Corrective action	• Wire the cables properly. • Check the *Pr. 251 Output phase loss protection selection* settting.			

Operation panel indication	E.OHT	E.OHT	FR-PU04 FR-PU07	OH Fault
Name	External thermal relay operation			
Description	If the external thermal relay provided for motor overheat protection or the internally mounted temperature relay in the motor, etc. switches on (contacts open), the inverter output is stopped. Functions when "7" (OH signal) is set in any of *Pr. 178 to Pr. 182 (input terminal function selection)*. This protective function does not function in the initial status (OH signal is not assigned).			
Check point	• Check for motor overheating. • Check that the value of 7 (OH signal) is set correctly in any of *Pr. 178 to Pr. 182 (input terminal function selection)*.			
Corrective action	• Reduce the load and frequency of operation. • Even if the relay contacts are reset automatically, the inverter will not restart unless it is reset.			

Operation panel indication	E.PTC	E.PTC	FR-PU04 FR-PU07	Fault 14 PTC activated
Name	PTC thermistor operation			
Description	Inverter trips when resistance of PTC thermistor connected between terminal 2 and terminal 10 is more than the value set in *Pr. 561 PTC thermistor protection level*. This protective function does not function when *Pr. 561* setting is initial value (*Pr. 561* = "9999").			
Check point	• Check the connection of the PTC thermistor. • Check the *Pr. 561 PTC thermistor protection level* setting. • Check the motor for operation under overload.			
Corrective action	Reduce the load weight.			

Operation panel indication	E.PE	E. PE	FR-PU04 FR-PU07	Corrupt Memry
Name	Parameter storage device fault (control circuit board)			
Description	Appears when a fault occurred in the stored parameters. (EEPROM fault)			
Check point	Check for too many number of parameter write times.			
Corrective action	Please contact your sales representative. When performing parameter write frequently for communication purposes, set "1" in *Pr. 342* to enable RAM write. Note that powering off returns the inverter to the status before RAM write.			

Email: service@repairtw.com
Line id: @ezz
www.repairtw.com

Operation panel indication	E.PUE	E.PUE	FR-PU04 FR-PU07	PU Leave Out
Name	PU disconnection			
Description	• This function stops the inverter output if communication between the inverter and PU is suspended, e.g. the parameter unit (FR-PU04/FR-PU07) is disconnected, when "2", "3", "16" or "17" was set in *Pr. 75 Reset selection/ disconnected PU detection/PU stop selection*. • This function stops the inverter output when communication errors occurred consecutively for more than permissible number of retries when a value other than "9999" is set in *Pr. 121 Number of PU communication retries* during the RS-485 communication with the PU connector (use *Pr. 502 Stop mode selection at communication error* to change). • This function also stops the inverter output if communication is broken within the period of time set in *Pr. 122 PU communication check time interval* during the RS-485 communication with the PU connector.			
Check point	• Check that the parameter unit cable is fitted tightly. • Check the *Pr. 75* setting. • Check that RS-485 communication data is correct. And check that the settings of communication parameter at inverter match settings of the computer. • Check that data is transmitted from the computer within a time set in *Pr. 122 PU communication check time interval*.			
Corrective action	Connect the parameter unit cable securely. Check the communication data and communication settings. Increase the *Pr. 122 PU communication check time interval* setting. Or set "9999" (no communication check).			

Operation panel indication	E.RET	E.rET	FR-PU04 FR-PU07	Retry No Over
Name	Retry count excess			
Description	If operation cannot be resumed properly within the number of retries set, this function trips the inverter. Functions only when *Pr. 67 Number of retries at fault occurrence* is set. When the initial value (*Pr. 67* = "0") is set, this protective function does not function.			
Check point	Find the cause of fault occurrence.			
Corrective action	Eliminate the cause of the error preceding this error indication.			

Operation panel indication	**E.5**	E. 5	**FR-PU04**	**Fault 5**
	E.CPU	E.CPU	**FR-PU07**	**CPU Fault**
Name	CPU fault			
Description	Stops the inverter output if the communication fault of the built-in CPU occurs.			
Check point	Check for devices producing excess electrical noises around the inverter.			
Corrective action	• Take measures against noises if there are devices producing excess electrical noises around the inverter. • Please contact your sales representative.			

Operation panel indication	**E.CDO**	E.CdO	**FR-PU04**	**Fault 14**
			FR-PU07	**OC detect level**
Name	Output current detection value exceeded			
Description	This function is activated when the output current exceeds the *Pr. 150 Output current detection level* setting.			
Check point	Check the settings of *Pr. 150 Output current detection level*, *Pr. 151 Output current detection signal delay time*, *Pr. 166 Output current detection signal retention time*, *Pr. 167 Output current detection operation selection*. (*Refer to page 124*)			

Operation panel indication	**E.IOH**	E.I OH	**FR-PU04**	**Fault 14**
			FR-PU07	**Inrush overheat**
Name	Inrush current limit circuit fault			
Description	This function is activated when the resistor of the inrush current limit circuit overheats. The inrush current limit circuit fault			
Check point	Check that frequent power ON/OFF is not repeated.			
Corrective action	Configure a circuit where frequent power ON/OFF is not repeated. If the problem still persists after taking the above measure, please contact your sales representative.			

Operation panel indication	**E.AIE**	E.AI E	**FR-PU04**	**Fault 14**
			FR-PU07	**Analog in error**
Name	Analog input fault			
Description	Appears if voltage(current) is input to terminal 4 when the setting in *Pr.267 Terminal 4 input selection* and the setting of voltage/current input switch are different.			
Check point	Check the setting of *Pr. 267 Terminal 4 input selection* and voltage/current input switch. *(Refer to page 150).*			
Corrective action	Either give a frequency command by current input or set *Pr. 267 Terminal 4 input selection*, and voltage/current input switch to voltage input.			

Email: service@repairtw.com
www.repairtw.com

Operation panel indication	**E.SAF**	E.SAF	**FR-PU04**	**Fault 14**
			FR-PU07	**Fault E.SAF**
Name	Safety circuit fault			
Description	Appears when safety circuit is malfunctioning. Appears when one of the lines between S1 and SC, or between S2 and SC is opened.			
Check point	• If the indication appears when safety stop function is not used, check that shorting wires between S1 and SC, S2 and SC are connected. • Check that the safety relay module is properly connected.			
Corrective action	If the indication appears when safety stop function is not used, short between S1 and SC, S2 and SC with shorting wires.			

NOTE

- **If protective functions of E.ILF, E.AIE, E.IOH, E.PTC, E.CDO, E.SAF are activated when using the FR-PU04, "Fault 14" is displayed.**
  Also when the faults history is checked on the FR-PU04, the display is "E.14".
- **If faults other than the above appear, contact your sales representative.**

5.4 Correspondences between digital and actual characters

There are the following correspondences between the actual alphanumeric characters and the digital characters displayed on the operation panel:

Actual	Digital
0	0
1	1
2	2
3	3
4	4
5	5
6	6
7	7
8	8
9	9

Actual	Digital
A	A
B	b
C	C
D	d
E	E
F	F
G	G
H	H
I	I
J	J
L	L

Actual	Digital
M	M
N	n
O	O
o	o
P	P
S	S
T	T
U	U
V	v
r	r
-	-

上正科技有限公司
購買、維修 此手冊零組件
電話： 037-466333
Email: service@repairtw.com
Line id: @zzzz
www.repairtw.com

5.5 Check first when you have some troubles

POINT

If the cause is still unknown after every check, it is recommended to initialize the parameters (initial value) then reset the required parameter values and check again.

5.5.1 Motor will not start

1) Check the *Pr. 0 Torque boost* setting if V/F control is exercised. *(Refer to page 73)*

2) Check the main circuit.
- Check that a proper power supply voltage is applied. (Operation panel display is provided.)
- Check that the motor is connected properly.
- Check that the jumper across P/+ and P1 is connected.

3) Check the input signals
- Check that the start signal is input.
- Check that both the forward and reverse rotation start signals are not input simultaneously.
- Check that the frequency setting signal is not zero. (When the frequency command is 0Hz and the start command is entered, RUN LED of the operation panel flickers.)
- Check that the AU signal is ON when terminal 4 is used for frequency setting.
- Check that the output stop signal (MRS) or reset signal (RES) is not ON.
- Check that the sink or source jumper connector is fitted securely. *(Refer to page 22)*
- Check that the jumper across S1-SC, S2-SC is connected.

上正科技有限公司
購買、維修 此手冊零組件
電話: 03-7400333
Email: service@repairtw.com
Line id: @zzzz
www.repairtw.com

4) Check the parameter settings
- Check that *Pr. 78 Reverse rotation prevention selection* is not set.
- Check that the *Pr. 79 Operation mode selection* setting is correct.
- Check that the bias and gain *(calibration parameter C2 to C7)* settings are correct.
- Check that the starting frequency *Pr. 13 Starting frequency* setting is not greater than the running frequency.
- Check that frequency settings of each running frequency (such as multi-speed operation) are not zero. Check that especially *Pr. 1 Maximum frequency* is not zero.
- Check that the *Pr. 15 Jog frequency* setting is not lower than the *Pr. 13 Starting frequency* value.
- Check that the operation location by *Pr. 551* is appropriate. (Example: write from the operation panel is disabled when parameter unit is connected)
  (Refer to page 237).

5) Inspection of load
- Check that the load is not too heavy.
- Check that the shaft is not locked.

6) Others
- Check that the operation panel display does not show a fault (e.g. E.OC1).

5.5.2 Motor generates abnormal noise

- No carrier frequency noises (metallic noises) are generated.
  - Soft-PWM control to change the motor tone into an unoffending complex tone is factory-set to valid by *Pr. 72 PWM frequency selection*.
    Adjust *Pr. 72 PWM frequency selection* to change the motor tone.
- Check for any mechanical looseness.
- Contact the motor manufacturer.

5.5.3 Motor generates heat abnormally

- Is the fan for the motor is running? (Check for dust accumulated.)
- Check that the load is not too heavy. Lighten the load.
- Are the inverter output voltages (U, V, W) balanced?
- Check that the *Pr. 0 Torque boost* setting is correct.
- Was the motor type set? Check the setting of *Pr. 71 Applied motor*.
- When using any other manufacturer's motor, perform offline auto tuning. *(Refer to page 105.)*

5.5.4 Motor rotates in opposite direction

- Check that the phase sequence of output terminals U, V and W is correct.
- Check that the start signals (forward rotation, reverse rotation) are connected properly. *(Refer to page 20)*
- Check that the *Pr. 40 RUN key rotation direction selection* setting is correct. *(Refer to page 237).*

5.5.5 Speed greatly differs from the setting

- Check that the frequency setting signal is correct. (Measure the input signal level.)
- Check that the *Pr. 1, Pr. 2, Pr. 19, Pr. 245, calibration parameter Pr. 125, Pr. 126, C2 to C7* settings are correct.
- Check that the input signal lines are not affected by external noise. (use shielded cables)
- Check that the load is not too heavy.
- Check that the *Pr. 31* to *Pr. 36 (frequency jump)* settings are correct.

5.5.6 Acceleration/deceleration is not smooth

上正科技有限公司
購買、維修 此手冊零組件
電話： 037-466333
Email: service@repairtw.com
Line id: @zzzz
www.repairtw.com

- Check that the acceleration and deceleration time settings are not too short.
- Check that the load is not too heavy.
- Check that the torque boost *(Pr. 0, Pr. 46)* setting is not too large to activate the stall function under V/F control.

5.5.7 Motor current is large

- Check that the load is not too heavy.
- Check that the *Pr. 0 Torque boost* setting is correct.
- Check that the *Pr. 3 Base frequency* setting is correct.
- Check that the *Pr. 19 Base frequency voltage* setting is correct
- Check that the *Pr. 14 Load pattern selection* setting is correct.

5.5.8 Speed does not increase

- Check that the *Pr. 1 Maximum frequency* setting is correct. (If you want to run the motor at 120Hz or more, set *Pr. 18 High speed maximum frequency*. *(Refer to page 83).*
- Check that the load is not too heavy. (In agitators, etc., load may become heavier in winter.)
- Check that the torque boost *(Pr. 0, Pr. 46)* setting is not too large to activate the stall function under V/F control.
- Check that the brake resistor is not connected to terminals P/+ and P1, or P1 and PR accidentally.

5.5.9 Speed varies during operation

When slip compensation is set, the output frequency varies with load fluctuation between 0 and 2Hz. This is a normal operation and is not a fault.

1) Inspection of load
- Check that the load is not varying.

2) Check the input signals
- Check that the frequency setting signal is not varying.
- Check that the frequency setting signal is not affected by noise. Set filter to the analog input terminal using *Pr. 74 Input filter time constant*.
- Check for a malfunction due to undesirable currents when the transistor output unit is connected. *(Refer to page 23)*

3) Others
- Check that the value of *Pr. 80 Motor capacity* is correct to the inverter capacity and motor capacity under General-purpose magnetic flux vector control.
- Check that the wiring length is not exceeding 30m (98.42 feet) when General-purpose magnetic flux vector control is exercised. Perform offline auto tuning. *(Refer to page 105).*
- Check that the wiring length is not too long for V/F control.
- Change the *Pr. 19 Base frequency voltage* setting (about 3%) under V/F control.

5.5.10 Operation mode is not changed properly

三菱伺服自動化公司
購買、維修、代理四零組件
電話： 037-466333
Email: service@repairtw.com
Line id: @zzzz
www.repairtw.com

If the operation mode does not change correctly, check the following:

1) External input signal
Check that the STF or STR signal is off. When it is on, the operation mode cannot be changed.

2) Parameter setting
- Check the *Pr. 79* setting.
  When the *Pr. 79 Operation mode selection* setting is "0" (initial value), the inverter is placed in the external operation mode at input power-on. At this time, press PU/EXT on the operation panel (press PU when the parameter unit (FR-PU04/FR-PU07) is used) to switch to the PU operation mode. For other values (1 to 4, 6, 7), the operation mode is limited accordingly.
- Check that the operation location by *Pr. 551* is correct. (Example: write from the operation panel is disabled when parameter unit is connected)
  (Refer to page 237).

5.5.11 Operation panel display is not operating

- Check that wiring is securely performed and installation is correct.
- Make sure that the connector is fitted securely across terminals P/+ and P1.

5.5.12 Parameter write cannot be performed

- Make sure that operation is not being performed (signal STF or STR is not ON).
- Make sure that you are not attempting to set the parameter in the external operation mode.
- Check *Pr. 77 Parameter write selection*.
- Check *Pr. 161 Frequency setting/key lock operation selection*.
- Check that the operation location by *Pr. 551* is correct. (Example: write from the operation panel is disabled when parameter unit is connected) *(Refer to page 237).*

6 PRECAUTIONS FOR MAINTENANCE AND INSPECTION

This chapter provides the "PRECAUTIONS FOR MAINTENANCE AND INSPECTION" of this product.
Always read the instructions before using the equipment

6.1 Inspection items..... 264
6.2 Measurement of main circuit voltages, currents and powers .. 271

上通科技有限公司
購買、維修 此手冊零組件
電話： 037-466333
Email: service@repairtw.com
Line id: @zzzz
www.repairtw.com

The inverter is a static unit mainly consisting of semiconductor devices. Daily inspection must be performed to prevent any fault from occurring due to the adverse effects of the operating environment, such as temperature, humidity, dust, dirt and vibration, changes in the parts with time, service life, and other factors.

●Precautions for maintenance and inspection

For some short time after the power is switched off, a high voltage remains in the smoothing capacitor. When accessing the inverter for inspection, wait for at least 10 minutes after the power supply has been switched off, and then make sure that the voltage across the main circuit terminals P/+ and N/- of the inverter is not more than 30VDC using a tester, etc.

6.1 Inspection items

6.1.1 Daily inspection

Basically, check for the following faults during operation.

(1) Motor operation fault
(2) Improper installation environment
(3) Cooling system fault
(4) Abnormal vibration, abnormal noise
(5) Abnormal overheat, discoloration

During operation, check the inverter input voltages using a tester.

6.1.2 Periodic inspection

上正科技有限公司
購買、維修 此手冊零組件
電話： 037-466333
Line Id: @2222
www.repairtw.com

Check the areas inaccessible during operation and requiring periodic inspection.
Consult us for periodic inspection.

(1) Check for cooling system fault.....Clean the air filter, etc.
(2) Tightening check and retightening.....The screws and bolts may become loose due to vibration, temperature changes, etc. Check and tighten them.
Tighten them according to the specified tightening torque *(Refer to page 17)*.
(3) Check the conductors and insulating materials for corrosion and damage.
(4) Measure insulation resistance.
(5) Check and change the cooling fan and relay.

6.1.3 Daily and periodic inspection

Area of Inspection	Inspection Item	Description	Interval: Daily	Interval: Periodic *2	Corrective Action at Alarm Occurrence	Customer's Check
General	Surrounding environment	Check the surrounding air temperature, humidity, dirt, corrosive gas, oil mist, etc.	○		Improve environment	
	Overall unit	Check for unusual vibration and noise.	○		Check alarm location and retighten	
	Power supply voltage	Check that the main circuit voltages are normal.*1	○		Inspect the power supply	
Main circuit	General	(1) Check with megger (across main circuit terminals and earth (ground) terminal). (2) Check for loose screws and bolts. (3) Check for overheat traces on the parts. (4) Check for stain		○ ○ ○ ○	Contact the manufacturer Retighten Contact the manufacturer Clean	
	Conductors, cables	(1) Check conductors for distortion. (2) Check cable sheaths for breakage and deterioration (crack, discoloration, etc.)		○ ○	Contact the manufacturer Contact the manufacturer	
	Terminal block	Check for damage.		○	Stop the device and contact the manufacturer.	
	Smoothing aluminum electrolytic capacitor	(1) Check for liquid leakage. (2) Check for safety valve projection and bulge. (3) Visual check and judge by the life check of the main circuit capacitor *(Refer to page 266)*		○ ○ ○	Contact the manufacturer Contact the manufacturer	
	Relay	Check that the operation is normal and no chatter is heard.		○	Contact the manufacturer	
Control circuit, Protective circuit	Operation check	(1) Check that the output voltages across phases with the inverter operated alone is balanced (2) Check that no fault is found in protective and display circuits in a sequence protective operation test.		○ ○	Contact the manufacturer Contact the manufacturer	
	Parts check: Overall	(1) Check for unusual odor and discoloration. (2) Check for serious rust development		○ ○	Stop the device and contact the manufacturer. Contact the manufacturer	
	Parts check: Aluminum electrolytic capacitor	(1) Check for liquid leakage in a capacitor and deformation trance (2) Visual check and judge by the life check of the main circuit capacitor *(Refer to page 266)*		○ ○	Contact the manufacturer	
Cooling system	Cooling fan	(1) Check for unusual vibration and noise. (2) Check for loose screws and bolts (3) Check for stain	○	 ○ ○	Replace the fan Retighten Clean	
	Heatsink	(1) Check for clogging (2) Check for stain		○ ○	Clean Clean	
Display	Indication	(1) Check that display is normal. (2) Check for stain	○	 ○	Contact the manufacturer Clean	
	Meter	Check that reading is normal	○		Stop the device and contact the manufacturer.	
Load motor	Operation check	Check for vibration and abnormal increase in operation noise	○		Stop the device and contact the manufacturer.	

*1 It is recommended to install a device to monitor voltage for checking the power supply voltage to the inverter.

*2 One to two years of periodic inspection cycle is recommended. However, it differs according to the installation environment. Consult us for periodic inspection.

上正科技有限公司
歡迎訂購各廠牌工業用零組件
電話： 037-466333
Email： service@repairtw.com
Line id： @zzzz
www.repairtw.com

6.1.4 Display of the life of the inverter parts

The self-diagnostic alarm is output when the life span of the control circuit capacitor, cooling fan and each parts of the inrush current limit circuit is near to give an indication of replacement time.

The life alarm output can be used as a guideline for life judgement.

Parts	Judgement Level
Main circuit capacitor	85% of the initial capacity
Control circuit capacitor	Estimated remaining life 10%
Inrush current limit circuit	Estimated remaining life 10% (Power on: 100,000 times left)
Cooling fan	Less than 50% of the predetermined speed

POINT

Refer to page 229 to perform the life check of the inverter parts.

6.1.5 Checking the inverter and converter modules

<Preparation>

(1) Disconnect the external power supply cables (R/L1, S/L2, T/L3) and motor cables (U, V, W).

(2) Prepare a tester. (Use 100Ω range.)

<Checking method>

Change the polarity of the tester alternately at the inverter terminals R/L1, S/L2, T/L3, U, V, W, P/+ and N/-, and check for continuity.

NOTE

1. **Before measurement, check that the smoothing capacitor is discharged.**
2. **At the time of discontinuity, the measured value is almost ∞. When there is an instantaneous continuity, due to the smoothing capacitor, the tester may not indicate ∞. At the time of continuity, the measured value is several to several tens-of ohms depending on the module type, circuit tester type, etc. If all measured values are almost the same, the modules are without fault.**

上正科技有限公司
購買、維修、技術諮詢電話： 037-466333
Line id: @zzzz
www.repairtw.com

<Module device numbers and terminals to be checked>

		Tester Polarity ⊕	Tester Polarity ⊖	Measured Value		Tester Polarity ⊕	Tester Polarity ⊖	Measured Value
Converter module	D1	R/L1	P/+	Discontinuity	D4	R/L1	N/–	Continuity
		P/+	R/L1	Continuity		N/–	R/L1	Discontinuity
	D2	S/L2	P/+	Discontinuity	D5	S/L2	N/–	Continuity
		P/+	S/L2	Continuity		N/–	S/L2	Discontinuity
	D3*	T/L3*	P/+	Discontinuity	D6*	T/L3*	N/–	Continuity
		P/+	T/L3*	Continuity		N/–	T/L3*	Discontinuity
Inverter module	TR1	U	P/+	Discontinuity	TR4	U	N/–	Continuity
		P/+	U	Continuity		N/–	U	Discontinuity
	TR3	V	P/+	Discontinuity	TR6	V	N/–	Continuity
		P/+	V	Continuity		N/–	V	Discontinuity
	TR5	W	P/+	Discontinuity	TR2	W	N/–	Continuity
		P/+	W	Continuity		N/–	W	Discontinuity

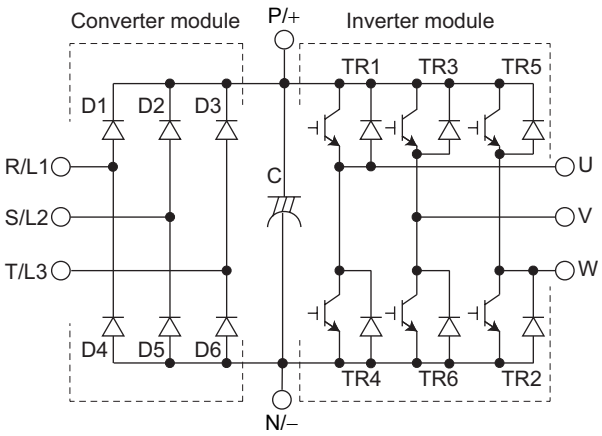

(Assumes the use of an analog meter.)

* T/L3, D3 and D6 are only for the three-phase power input specification models.

6.1.6 Cleaning

Always run the inverter in a clean status.

When cleaning the inverter, gently wipe dirty areas with a soft cloth immersed in neutral detergent or ethanol.

NOTE

Do not use solvent, such as acetone, benzene, toluene and alcohol, as they will cause the inverter surface paint to peel off. The display, etc. of the operation panel and parameter unit (FR-PU04/FR-PU07) are vulnerable to detergent and alcohol. Therefore, avoid using them for cleaning.

6.1.7 Replacement of parts

The inverter consists of many electronic parts such as semiconductor devices.
The following parts may deteriorate with age because of their structures or physical characteristics, leading to reduced performance or fault of the inverter. For preventive maintenance, the parts must be replaced periodically.
Use the life check function as a guidance of parts replacement.

Part Name	Standard Replacement Interval *1	Description
Cooling fan	10 years	Replace (as required)
Main circuit smoothing capacitor	10 years *2	Replace (as required)
On-board smoothing capacitor	10 years	Replace the board (as required)
Relays	—	as required

*1 Replacement years for when the yearly average surrounding air temperature is 40°C (104°F) (without corrosive gas, flammable gas, oil mist, dust and dirt etc.)
*2 Output current: 80% of the inverter rated current

NOTE

For parts replacement, consult the nearest Mitsubishi FA Center.

(1) Cooling fan

The replacement interval of the cooling fan used for cooling the parts generating heat such as the main circuit semiconductor is greatly affected by the surrounding air temperature. When unusual noise and/or vibration is noticed during inspection, the cooling fan must be replaced immediately.

上正科技有限公司
購買、維修 此手冊零組件
電話： 037-466333
Email: service@repairtw.com
Line Id: @zzzz
www.repairtw.com

NOTE

For parts replacement, consult the nearest Mitsubishi FA Center.

Inverter Type	Fan Type	Units
FR-D720-070 to 165 FR-D740-036 to 080 FR-D720S-070 and 100	MMF-06F24ES-RP1 BKO-CA1638H01	1
FR-D720-238, 318 FR-D740-120, 160	MMF-06F24ES-RP1 BKO-CA1638H01	2

The FR-D720-042 or less, FR-D740-022 or less, FR-D720S-008 to 042 are not provided with a cooling fan.

●**Removal**

1) Push the hooks from above and remove the fan cover.

FR-D720-165 or less
FR-D740-080 or less
FR-D720S-070 and 100

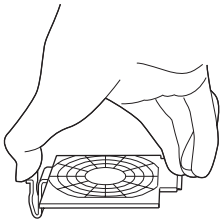

FR-D720-238 or more
FR-D740-120 or more

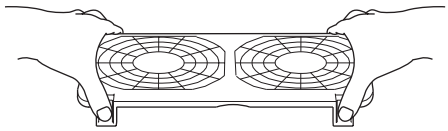

2) Disconnect the fan connectors.
3) Remove the fan.

FR-D720-165 or less
FR-D740-080 or less
FR-D720S-070 and 100

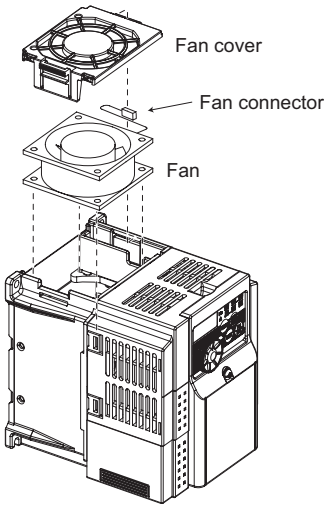

Example for FR-D740-036

FR-D720-238 or more
FR-D740-120 or more

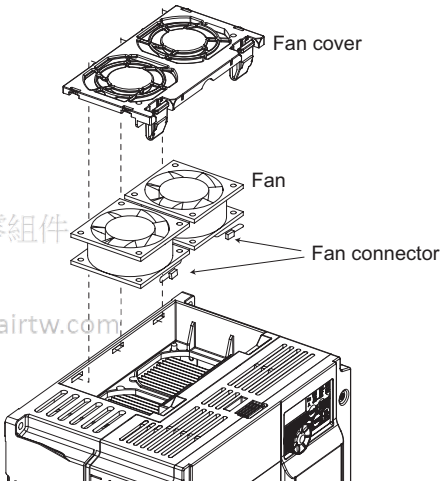

Example for FR-D740-160

上正科技有限公司
購買、維修 此手冊零組件
電話： 037-466333
Email: service@repairtw.com
Line id: @zzzz
www.repairtw.com

●**Reinstallation**

1) After confirming the orientation of the fan, reinstall the fan so that the arrow on the left of "AIR FLOW" faces up.

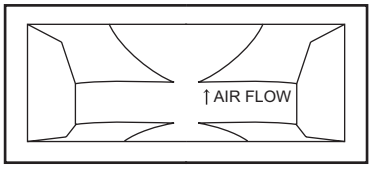

<Fan side face>

2) Reconnect the fan connectors.
3) When wiring, use care to avoid the cables being caught by the fan.

FR-D720-165 or less
FR-D740-080 or less
FR-D720S-070 and 100

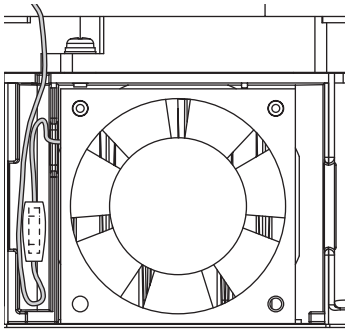

FR-D720-238 or more
FR-D740-120 or more

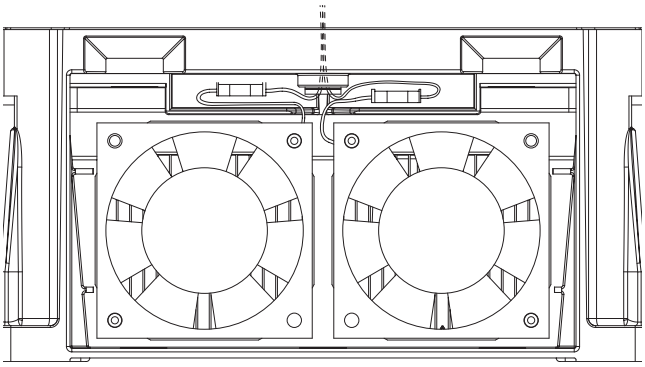

4) Reinstall the fan cover.

上正科技有限公司
購買、維修 此手冊零組件
電話： 037-466
Email: service@repairtw.com
Line id: @zzzz
www.repairtw.com

FR-D720-165 or less
FR-D740-080 or less
FR-D720S-070 and 100

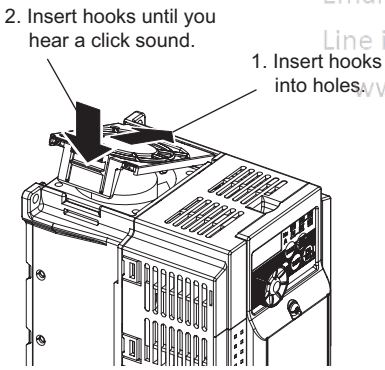

Example for FR-D740-036

FR-D720-238 or more
FR-D740-120 or more

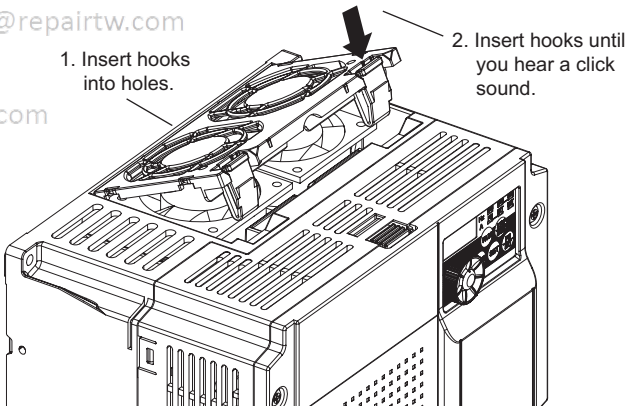

Example for FR-D740-160

NOTE

- **Installing the fan in the opposite air flow direction can cause the inverter life to be shorter.**
- **Prevent the cable from being caught when installing a fan.**
- **Switch the power off before replacing fans. Since the inverter circuits are charged with voltage even after power off, replace fans only when the inverter cover is on the inverter to prevent an electric shock accident.**

(2) Smoothing capacitors

A large-capacity aluminum electrolytic capacitor is used for smoothing in the main circuit DC section, and an aluminum electrolytic capacitor is used for stabilizing the control power in the control circuit. Their characteristics are deteriorated by the adverse effects of ripple currents, etc. The replacement intervals greatly vary with the surrounding air temperature and operating conditions. When the inverter is operated in air-conditioned and normal environment conditions, replace the capacitors about every 10 years.

When a certain period of time has elapsed, the capacitors will deteriorate more rapidly. Check the capacitors at least every year (less than six months if the life will be expired soon).

The appearance criteria for inspection are as follows:

1) Case: Check the side and bottom faces for expansion
2) Sealing plate: Check for remarkable warp and extreme crack.
3) Check for external crack, discoloration, liquid leakage, etc. Judge that the capacitor has reached its life when the measured capacitance of the capacitor reduced below 80% of the rating.

POINT

Refer to page 229 to perform the life check of the main circuit capacitor.

(3) Relays

To prevent a contact fault, etc., relays must be replaced according to the cumulative number of switching times (switching life).

上正科技有限公司
購買、維修 此手冊零組件
電話： 037-466333
Email: service@repairtw.com
Line id: @zzzz
www.repairtw.com

6.2 Measurement of main circuit voltages, currents and powers

Since the voltages and currents on the inverter power supply and output sides include harmonics, measurement data depends on the instruments used and circuits measured.
When instruments for commercial frequency are used for measurement, measure the following circuits with the instruments given on the next page.

- When installing meters etc. on the inverter output side
  When the inverter-to-motor wiring length is large, especially in the 400V class, small-capacity models, the meters and CTs may generate heat due to line-to-line leakage current. Therefore, choose the equipment which has enough allowance for the current rating.
  To measure and display the output voltage and output current of the inverter, it is recommended to use the AM-5 terminal output function of the inverter.

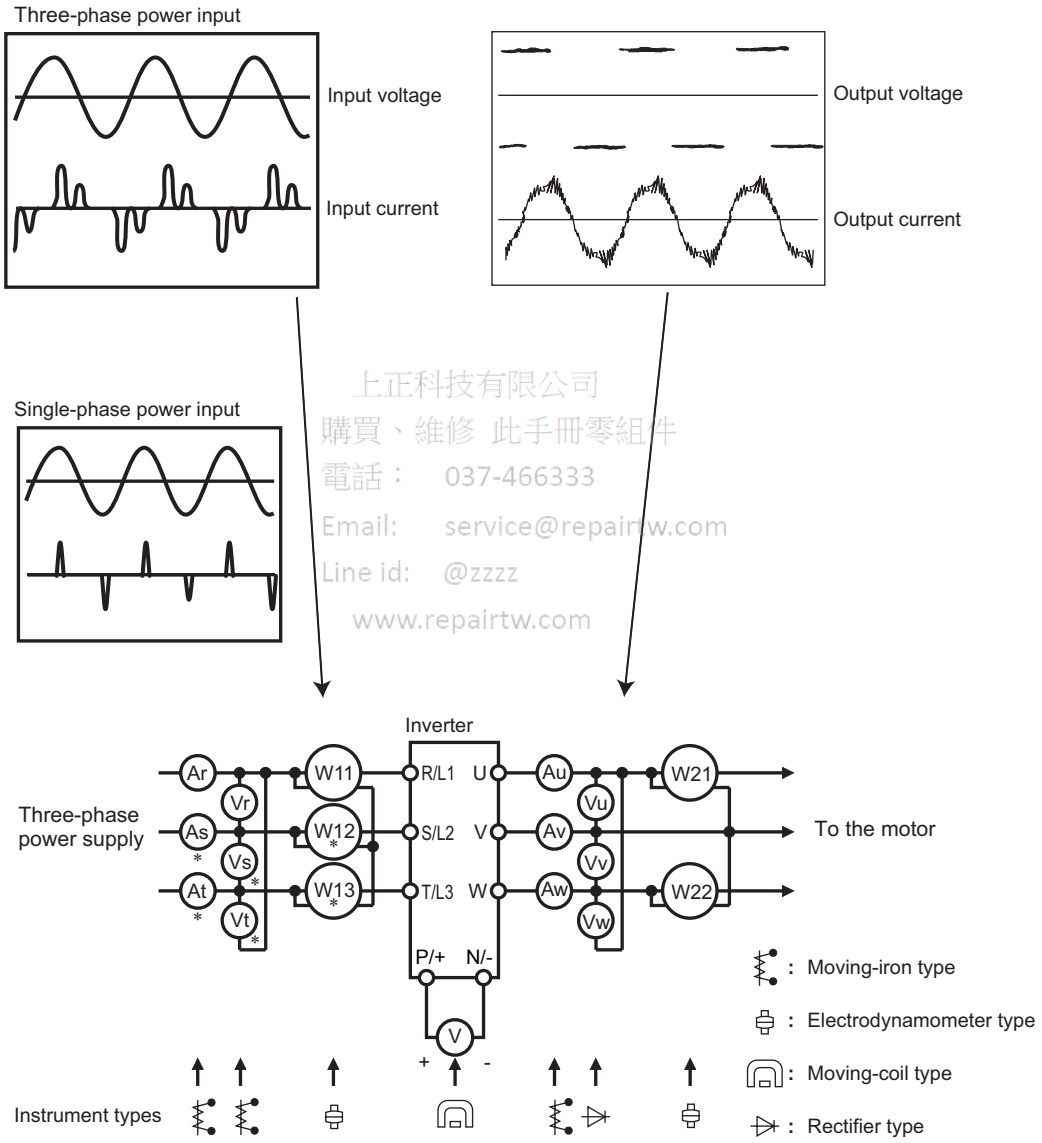

上正科技有限公司
購買、維修 此手冊零組件
電話： 037-466333
Email: service@repairtw.com
Line id: @zzzz
www.repairtw.com

∗ At, As, Vt, Vs, W12, W13 are only for the three-phase power input specification models.

Examples of Measuring Points and Instruments

Measuring Points and Instruments

Item	Measuring Point	Measuring Instrument	Remarks (Reference Measured Value)
Power supply voltage V1	R/L1-S/L2 S/L2-T/L3 T/L3-R/L1 ∗4	Moving-iron type AC voltmeter	Commercial power supply Within permissible AC voltage fluctuation *(Refer to page 278)*
Power supply side current I1	R/L1, S/L2, T/L3 line current ∗4	Moving-iron type AC ammeter	
Power supply side power P1	R/L1, S/L2, T/L3 and R/L1-S/L2, S/L2-T/L3, T/L3-R/L1 ∗4	Electrodynamic type single-phase wattmeter	P1=W11+W12+W13 (3-wattmeter method)
Power supply side power factor Pf1	Calculate after measuring power supply voltage, power supply side current and power supply side power. [Three-phase power supply] $Pf_1 = \frac{P_1}{\sqrt{3}V_1 \times I_1} \times 100\ \%$		[Single-phase power supply] $Pf_1 = \frac{P_1}{V_1 \times I_1} \times 100\ \%$
Output side voltage V2	Across U-V, V-W and W-U	Rectifier type AC voltage meter ∗1 (moving-iron type cannot measure)	Difference between the phases is within 1% of the maximum output voltage.
Output side current I2	U, V and W line currents	Moving-iron type AC ammeter ∗2	Difference between the phases is 10% or lower of the rated inverter current.
Output side power P2	U, V, W and U-V, V-W	Electrodynamic type single-phase wattmeter	P2 = W21 + W22 2-wattmeter method (or 3-wattmeter method)
Output side power factor Pf2	Calculate in similar manner to power supply side power factor. $Pf_2 = \frac{P_2}{\sqrt{3}V_2 \times I_2} \times 100\ \%$		
Converter output	Across P/+ and N/-	Moving-coil type (such as tester)	Inverter LED display is lit. 1.35 × V1
Frequency setting signal	Across 2(+)-5 Across 4(+)-5	Moving-coil type (tester and such may be used) (internal resistance 50kΩ or more)	0 to 10VDC, 4 to 20mADC "5" is common.
Frequency setting power supply	Across 10(+)-5		5.2VDC "5" is common.
Frequency meter signal	Across AM(+)-5		Approx. 10VDC at maximum frequency (without frequency meter) "5" is common.
Start signal Select signal	Across STF, STR, RH, RM, RL(+)-SD		When open 20 to 30VDC ON voltage: 1V or less "SD" is common.
Fault signal	Across A-C Across B-C	Moving-coil type (such as tester)	Continuity check ∗3 <Normal> <Fault> Across A-C Discontinuity Continuity Across B-C Continuity Discontinuity

∗1 Use an FFT to measure the output voltage accurately. An FA tester or general measuring instrument cannot measure accurately.

∗2 When the carrier frequency exceeds 5kHz, do not use this instrument since using it may increase eddy-current losses produced in metal parts inside the instrument, leading to burnout. In this case, use an approximate-effective value type.

∗3 When the setting of *Pr. 192 A,B,C terminal function selection* is positive logic

∗4 T/L3 is only for the three-phase power input specification models.

購買、維修 此手冊零組件
電話： 037-466333
Email: service@repairtw.com
Line id: @rsc
www.repairtw.com

6.2.1 Measurement of powers

Using an electro-dynamometer type meter, measure the power in both the input and output sides of the inverter using the two- or three-wattmeter method. As the current is liable to be imbalanced especially in the input side, it is recommended to use the three-wattmeter method.

Examples of process value differences produced by different measuring meters are shown below.

An error will be produced by difference between measuring instruments, e.g. power calculation type and two- or three-wattmeter type three-phase wattmeter. When a CT is used in the current measuring side or when the meter contains a PT on the voltage measurement side, an error will also be produced due to the frequency characteristics of the CT and PT.

[Measurement conditions]

Constant-torque (100%) load, note that 60Hz or more should be constantly output 3.7kW, 4-pole motor, value indicated in 3-wattmeter method is 100%.

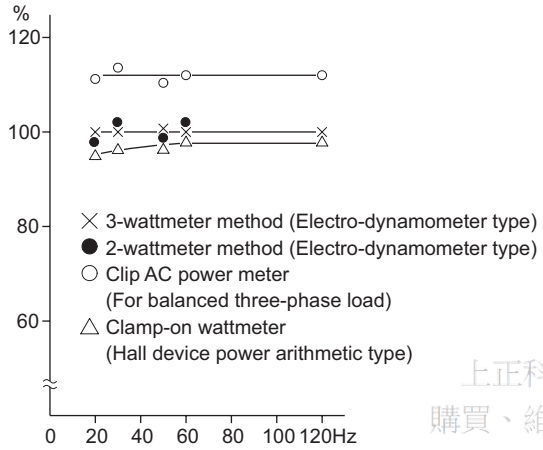

Example of Measuring Inverter Input Power

[Measurement conditions]

Constant-torque (100%) load, note that 60Hz or more should be constantly output 3.7kW, 4-pole motor, value indicated in 3-wattmeter method is 100%.

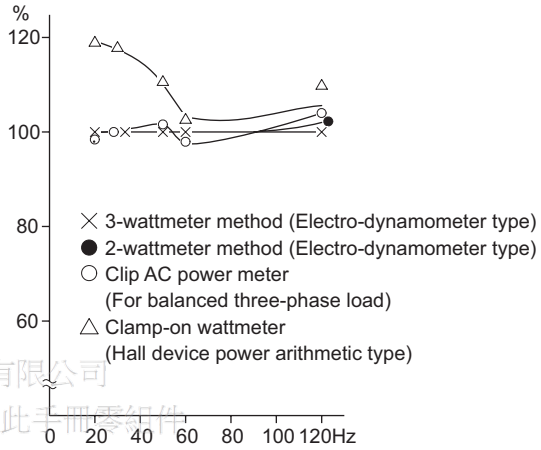

Example of Measuring Inverter Output Power

上正科技有限公司
購買、維修 此手冊零組件
電話： 037-466333
Email: service@repairtw.com
Line id: @zzzz
www.repairtw.com

6.2.2 Measurement of voltages and use of PT

(1) Inverter input side

As the input side voltage has a sine wave and it is extremely small in distortion, accurate measurement can be made with an ordinary AC meter.

(2) Inverter output side

Since the output side voltage has a PWM-controlled rectangular wave, always use a rectifier type voltmeter. A needle type tester can not be used to measure the output side voltage as it indicates a value much greater than the actual value. A moving-iron type meter indicates an effective value which includes harmonics and therefore the value is larger than that of the fundamental wave. The value monitored on the operation panel is the inverter-controlled voltage itself. Hence, that value is accurate and it is recommended to monitor values using the operation panel.

(3) PT

No PT can be used in the output side of the inverter. Use a direct-reading meter. (A PT can be used in the input side of the inverter.)

6.2.3 Measurement of currents

Use a moving-iron type meter on both the input and output sides of the inverter. However, if the carrier frequency exceeds 5kHz, do not use that meter since an overcurrent losses produced in the internal metal parts of the meter will increase and the meter may burn out. In this case, use an approximate-effective value type.
Since current on the inverter input side tends to be unbalanced, measurement of three phases is recommended. Correct value can not be obtained by measuring only one or two phases. On the other hand, the unbalanced ratio of each phase of the output side current should be within 10%.
When a clamp ammeter is used, always use an effective value detection type. A mean value detection type produces a large error and may indicate an extremely smaller value than the actual value. The value monitored on the operation panel is accurate if the output frequency varies, and it is recommended to monitor values (provide analog output) using the operation panel.
Examples of process value differences produced by different measuring meters are shown below.

[Measurement conditions]
Value indicated by moving-iron type ammeter is 100%.

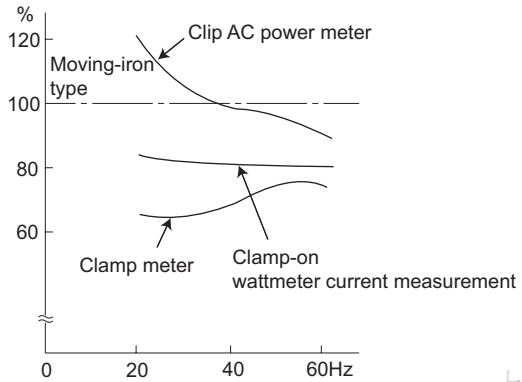

Example of measuring inverter input current

[Measurement conditions]
Value indicated by moving-iron type ammeter is 100%.

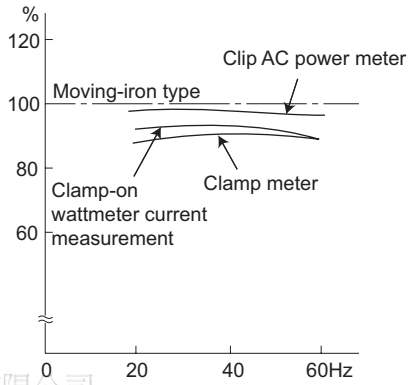

Example of measuring inverter output current

上正科技有限公司
購買、維修 此手冊零組件
電話： 037-466333
Email: service@repairtw.com
Line Id: @zzzz
www.repairtw.com

6.2.4 Use of CT and transducer

A CT may be used in both the input and output sides of the inverter, but the one used should have the largest possible VA ability because an error will increase if the frequency gets lower.
When using a transducer, use the effective value calculation type which is immune to harmonics.

6.2.5 Measurement of inverter input power factor

Calculate using effective power and apparent power. A power-factor meter can not indicate an exact value.

$$\text{Total power factor of the inverter} = \frac{\text{Effective power}}{\text{Apparent power}} = \frac{\text{3-phase input power found by 3-wattmeter method}}{\sqrt{3} \times \text{V (power supply voltage)} \times \text{I (input current effective value)}}$$

6.2.6 Measurement of converter output voltage (across terminals P and N)

The output voltage of the converter is developed across terminals P and N and can be measured with a moving-coil type meter (tester). Although the voltage varies according to the power supply voltage, approximately 270V to 300V (540V to 600V for the 400V class) is output when no load is connected and voltage decreases when a load is connected.
When regenerative energy is returned from the motor during deceleration, for example, the converter output voltage rises to nearly 400V to 450V (800V to 900V for the 400V class) maximum.

6.2.7 Insulation resistance test using megger

- For the inverter, conduct the insulation resistance test on the main circuit only as shown below and do not perform the test on the control circuit. (Use a 500VDC megger.)

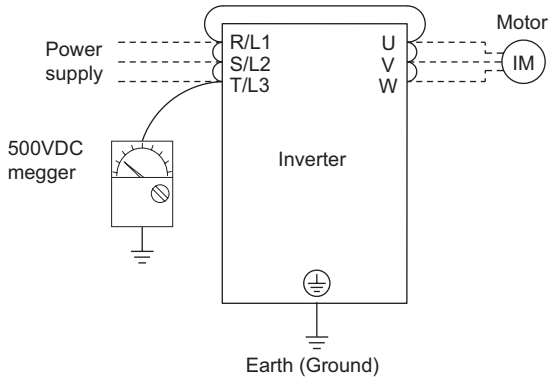

NOTE

- **Before performing the insulation resistance test on the external circuit, disconnect the cables from all terminals of the inverter so that the test voltage is not applied to the inverter.**
- **For the continuity test of the control circuit, use a tester (high resistance range) and do not use the megger or buzzer.**

6.2.8 Pressure test

Do not conduct a pressure test. Deterioration may occur.

上正科技有限公司
購買、維修 此手冊零組件
電話： 037-466333
Email: service@repairtw.com
Line id: @zzzz
www.repairtw.com

MEMO

上正科技有限公司
購買、維修 此手冊零組件
電話： 037-466333
Email: service@repairtw.com
Line id: @zzzz
www.repairtw.com

7 SPECIFICATIONS

This chapter provides the "SPECIFICATIONS" of this product.
Always read the instructions before using the equipment

7.1 Rating 278
7.2 Common specifications 280
7.3 Outline dimension drawings 281

上元科技有限公司
購買、維修、此手冊零組件
電話： 037-466333
Email: service@repairtw.com
Line id: @zzzz
www.repairtw.com

7.1 Rating

● Three-phase 200V power supply

Model FR-D720-□-NA		008	014	025	042	070	100	165	238	318
Applicable motor capacity (kW (HP))*1		0.1 (1/8)	0.2 (1/4)	0.4 (1/2)	0.75 (1)	1.5 (2)	2.2 (3)	3.7 (5)	5.5 (7.5)	7.5 (10)
Output	Rated capacity (kVA)*2	0.3	0.6	1.0	1.7	2.8	4.0	6.6	9.5	12.7
	Rated current (A)	0.8	1.4	2.5	4.2	7.0	10.0	16.5	23.8	31.8
	Overload current rating*3	150% 60s, 200% 0.5s (inverse-time characteristics)								
	Voltage*4	Three-phase 200 to 240V								
Power supply	Rated input AC voltage/frequency	Three-phase 200 to 240V 50Hz/60Hz								
	Permissible AC voltage fluctuation	170 to 264V 50Hz/60Hz								
	Permissible frequency fluctuation	±5%								
	Power supply capacity (kVA)*5	0.4	0.7	1.2	2.1	4.0	5.5	9.0	12.0	17.0
Protective structure (JEM1030)		Enclosed type (IP20)								
Cooling system		Self-cooling				Forced air cooling				
Approximate mass (kg (lbs))		0.5 (1.1)	0.5 (1.1)	0.8 (1.76)	1.0 (2.2)	1.4 (3.09)	1.4 (3.09)	1.8 (3.97)	3.6 (7.94)	3.6 (7.94)

● Three-phase 400V power supply

Model FR-D740-□-NA		012	022	036	050	080	120	160
Applicable motor capacity (kW (HP))*1		0.4 (1/2)	0.75 (1)	1.5 (2)	2.2 (3)	3.7 (5)	5.5 (7.5)	7.5 (10)
Output	Rated capacity (kVA)*2	0.9	1.7	2.7	3.8	6.1	9.1	12.2
	Rated current (A)	1.2	2.2	3.6	5.0	8.0	12.0	16.0
	Overload current rating*3	150% 60s, 200% 0.5s (inverse-time characteristics)						
	Voltage*4	Three-phase 380 to 480V						
Power supply	Rated input AC voltage/frequency	Three-phase 380 to 480V 50Hz/60Hz						
	Permissible AC voltage fluctuation	325 to 528V 50Hz/60Hz						
	Permissible frequency fluctuation	±5%						
	Power supply capacity (kVA)*5	1.5	2.5	4.5	5.5	9.5	12.0	17.0
Protective structure (JEM1030)		Enclosed type (IP20)						
Cooling system		Self-cooling		Forced air cooling				
Approximate mass (kg (lbs))		1.3 (2.87)	1.3 (2.87)	1.4 (3.09)	1.5 (3.31)	1.5 (3.31)	3.3 (7.28)	3.3 (7.28)

昇佑科技有限公司
購買、維修、出租變頻器伺服
電話： 03-3980-333
Email: service@powerjoy.com
Line id: @zzzz
www.repairtw.com

*1 The applicable motor capacity indicated is the maximum capacity applicable for use of the Mitsubishi 4-pole standard motor.

*2 The rated output capacity indicated assumes that the output voltage is 230V for three-phase 200V class and 440V for three-phase 400V class.

*3 The % value of the overload current rating indicated is the ratio of the overload current to the inverter's rated output current. For repeated duty, allow time for the inverter and motor to return to or below the temperatures under 100% load.

*4 The maximum output voltage does not exceed the power supply voltage. The maximum output voltage can be changed within the setting range. However, the pulse voltage value of the inverter output side voltage remains unchanged at about $\sqrt{2}$ that of the power supply.

*5 The power supply capacity varies with the value of the power supply side inverter impedance (including those of the input reactor and cables).

● Single-phase 200V power supply

Model FR-D720S-□-NA		008	014	025	042	070	100
Applicable motor capacity (kW (HP))*1		0.1 (1/8)	0.2 (1/4)	0.4 (1/2)	0.75 (1)	1.5 (2)	2.2 (3)
Output	Rated capacity (kVA)*2	0.3	0.6	1.0	1.7	2.8	4.0
	Rated current (A)	0.8	1.4	2.5	4.2	7.0	10.0
	Overload current rating*3	150% 60s, 200% 0.5s (inverse-time characteristics)					
	Voltage*4	Three-phase 200 to 240V					
Power supply	Rated input AC voltage/frequency	Single-phase 200 to 240V 50Hz/60Hz					
	Permissible AC voltage fluctuation	170 to 264V 50Hz/60Hz					
	Permissible frequency fluctuation	±5%					
	Power supply capacity (kVA)*5	0.5	0.9	1.5	2.3	4.0	5.2
Protective structure (JEM1030)		Enclosed type (IP20)					
Cooling system		Self-cooling				Forced air cooling	
Approximate mass (kg (lbs))		0.5 (1.1)	0.5 (1.1)	0.9 (1.98)	1.1 (2.43)	1.5 (3.31)	2.0 (4.41)

*1 The applicable motor capacity indicated is the maximum capacity applicable for use of the Mitsubishi 4-pole standard motor.

*2 The rated output capacity indicated assumes that the output voltage is 230V.

*3 The % value of the overload current rating indicated is the ratio of the overload current to the inverter's rated output current. For repeated duty, allow time for the inverter and motor to return to or below the temperatures under 100% load.

*4 The maximum output voltage does not exceed the power supply voltage. The maximum output voltage can be changed within the setting range. However, the pulse voltage value of the inverter output side voltage remains unchanged at about $\sqrt{2}$ that of the power supply.

*5 The power supply capacity varies with the value of the power supply side inverter impedance (including those of the input reactor and cables).

上正科技有限公司
購買、維修 此手冊零組件
電話： 037-466333
Email: service@repairtw.com
Line id: @zzzz
www.repairtw.com

7.2 Common specifications

Control specifications	Control method		Soft-PWM control/high carrier frequency PWM control (V/F control, General-purpose magnetic flux vector control, Optimum excitation control can be selected)
	Output frequency range		0.2 to 400Hz
	Frequency setting resolution	Analog input	0.06Hz/60Hz (terminal2, 4: 0 to 10V/10bit) 0.12Hz/60Hz (terminal2, 4: 0 to 5V/9bit) 0.06Hz/60Hz (terminal4: 0 to 20mA/10bit)
		Digital input	0.01Hz
	Frequency accuracy	Analog input	Within ±1% of the max. output frequency (25°C ±10°C)
		Digital input	Within 0.01% of the set output frequency
	Voltage/frequency characteristics		Base frequency can be set from 0 to 400Hz. Constant torque/variable torque pattern can be selected
	Starting torque		150% or more (at 1Hz)...when General-purpose magnetic flux vector control and slip compensation is set
	Torque boost		Manual torque boost
	Acceleration/deceleration time setting		0.1 to 3600s (acceleration and deceleration can be set individually), linear or S-pattern acceleration/deceleration mode can be selected.
	Braking torque	Regenerative*1	FR-D720-008 and 014, FR-D720S-008 and 014 ... 150%, FR-D720-025 and 042, FR-D740-012 and 022, FR-D720S-025 and 042 ... 100%, FR-D720-070, FR-D740-036, FR-D720S-070 ... 50%, FR-D720-100 or more, FR-D740-050 or more, FR-D720S-100 ... 20%
		DC injection brake	Operation frequency (0 to 120Hz), operation time (0 to 10s), operation voltage (0 to 30%) variable
	Stall prevention operation level		Operation current level can be set (0 to 200% adjustable), whether to use the function or not can be selected
Operation specifications	Frequency setting signal	Analog input	Two points Terminal 2: 0 to 10V, 0 to 5V can be selected Terminal 4: 0 to 10V, 0 to 5V, 4 to 20mA can be selected
		Digital input	Entered from operation panel and parameter unit. Frequency setting increments is selectable
	Start signal		Forward and reverse rotation or start signal automatic self-holding input (3-wire input) can be selected.
	Input signal		Five points You can select from among multi-speed selection, remote setting, second function selection, terminal 4 input selection, JOG operation selection, PID control valid terminal, external thermal input, PU-external operation switchover, V/F switchover, output stop, start self-holding selection, forward rotation, reverse rotation command, inverter reset, PU-NET operation switchover, external-NET operation switchover, command source switchover, inverter operation enable signal, and PU operation external interlock
	Operational functions		Maximum/minimum frequency setting, frequency jump operation, external thermal relay input selection, automatic restart after instantaneous power failure operation, forward/reverse rotation prevention, remote setting, second function, multi-speed operation, regeneration avoidance, slip compensation, operation mode selection, offline auto tuning function, PID control, computer link operation (RS-485), Optimum excitation control, power failure stop, speed smoothing control, Modbus-RTU
	Output signal: Output signal points	Open collector output	One point
		Relay output	One point
	Output signal: Operating status		You can select from among inverter operation, up-to-frequency, overload alarm, output frequency detection, regenerative brake prealarm, electronic thermal relay function prealarm, inverter operation ready, output current detection, zero current detection, PID lower limit, PID upper limit, PID forward/reverse rotation output, fan alarm*3, heatsink overheat pre-alarm, deceleration at an instantaneous power failure, PID control activated, PID output interruption, during retry, life alarm, current average value monitor, remote output, alarm output, fault output, fault output 3, and maintenance timer alarm
	Output signal: For meter Output points	Analog output	0 to 10VDC: one point
	Output signal: For meter		You can select from among output frequency, output current (steady), output voltage, frequency setting, converter output voltage, regenerative brake duty, electronic thermal relay function load factor, output current peak value, converter output voltage peak value, reference voltage output, motor load factor, PID set point, PID measured value, output power, PID deviation, motor thermal load factor, inverter thermal load factor 0 to 10VDC
Indication	Operation panel Parameter unit (FR-PU07)	Operating status	You can select from among output frequency, output current (steady), output voltage, frequency setting, cumulative energization time, actual operation time, converter output voltage, regenerative brake duty, electronic thermal relay function load factor, output current peak value, converter output voltage peak value, motor load factor, PID set point, PID measured value, PID deviation, inverter I/O terminal monitor, output power, cumulative power, motor thermal load factor, inverter thermal load factor, PTC thermistor resistance.
		Fault definition	Fault definition is displayed when the fault occurs and the past 8 fault definitions (output voltage/current/frequency/cumulative energization time right before the fault occurs) are stored
	Additional display by the parameter unit (FR-PU04/FR-PU07) only	Operating status	Not used
		Fault definition	Output voltage/current/frequency/cumulative energization time immediately before the fault occurs
		Interactive guidance	Function (help) for operation guide
Protective/warning function		Protective functions	Overcurrent during acceleration, overcurrent during constant speed, overcurrent during deceleration, overvoltage during acceleration, overvoltage during constant speed, overvoltage during deceleration, inverter protection thermal operation, motor protection thermal operation, heatsink overheat, input phase loss*5 *6, output side earth (ground) fault overcurrent at start*5, output phase loss, external thermal relay operation *5, PTC thermistor operation*5, parameter error, PU disconnection, retry count excess *5, CPU fault, brake transistor alarm, inrush resistance overheat, analog input error, stall prevention operation, output current detection value exceeded *5, safety circuit fault
		Warning functions	Fan alarm*3, overcurrent stall prevention, overvoltage stall prevention, PU stop, parameter write error, regenerative brake prealarm *5, electronic thermal relay function prealarm, maintenance output *5, undervoltage, operation panel lock, password locked, inverter reset, safety stop
Environment	Surrounding air temperature		-10°C to +50°C (14°F to 122°F) (non-freezing) *4
	Ambient humidity		90%RH maximum (non-condensing)
	Storage temperature*2		-20°C to +65°C (-4°F to 149°F)
	Atmosphere		Indoors (without corrosive gas, flammable gas, oil mist, dust and dirt etc.)
	Altitude/vibration		Maximum 1000m (3280.80 feet) above sea level, 5.9m/s ^{2} or less

*1 The braking torque indicated is a short-duration average torque (which varies with motor loss) when the motor alone is decelerated from 60Hz in the shortest time and is not a continuous regenerative torque. When the motor is decelerated from the frequency higher than the base frequency, the average deceleration torque will reduce. Since the inverter does not contain a brake resistor, use the optional brake resistor when regenerative energy is large. A brake unit (FR-BU2) may also be used.
*2 Temperatures applicable for a short time, e.g. in transit.
*3 As the FR-D720-042 or less, FR-D740-022 or less, FR-D720S-042 or less is not provided with the cooling fan, this alarm does not function.
*4 When using the inverters at the surrounding air temperature of 40°C (104°F) or less, the inverters can be installed closely attached (0cm clearance).
*5 This protective function does not function in the initial status.
*6 This protective function is available with the three-phase power input specification model only.

購買、維修 此手冊零組件
www.repairtw.com

7.3 Outline dimension drawings

●FR-D720-008 to 042
●FR-D720S-008 to 042

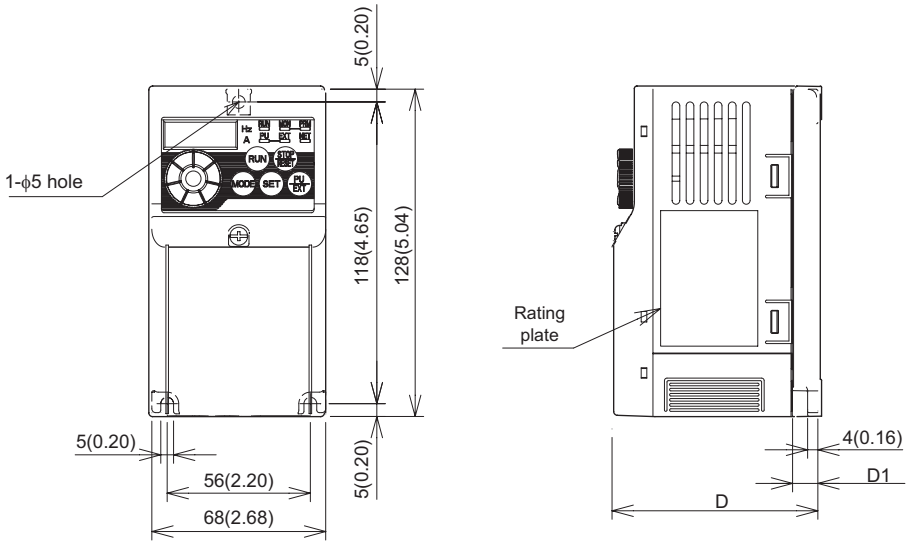

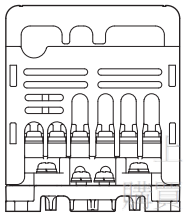

Inverter Type	D	D1
FR-D720-008, 014	80.5 (3.17)	10 (0.39)
FR-D720-025	112.5 (4.43)	42 (1.65)
FR-D720-042	132.5 (5.22)	62 (2.44)
FR-D720S-008, 014	80.5 (3.17)	10 (0.39)
FR-D720S-025	142.5 (5.61)	42 (1.65)
FR-D720S-042	162.5 (6.40)	62 (2.44)

(Unit: mm (inches))

正科技有限公司
、維修 此手冊
電話： 037-466333
Email: service@repairtw.com
Line id: @zzzz
www.repairtw.com

●FR-D720-070 to 165
●FR-D740-012 to 080
●FR-D720S-070

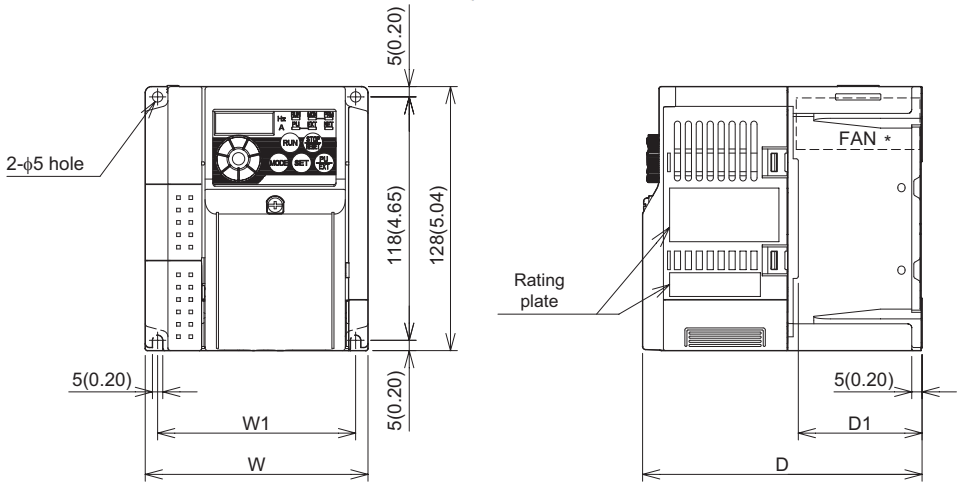

* FR-D740-012, 022 are not provided with the cooling fan.

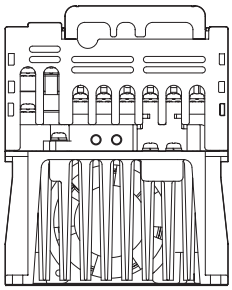

Inverter Type	W	W1	D	D1
FR-D720-070, 100	108 (4.25)	96 (3.78)	135.5 (5.34)	60 (2.36)
FR-D720-165	170 (6.69)	158 (6.22)	142.5 (5.61)	66.5 (2.62)
FR-D740-012, 022	108 (4.25)	96 (3.78)	129.5 (5.10)	54 (2.13)
FR-D740-036			135.5 (5.34)	60 (2.36)
FR-D740-050			155.5 (6.12)	
FR-D740-080			165.5 (6.52)	
FR-D720S-070			155.5 (6.12)	

(Unit: mm (inches))

●FR-D720S-100

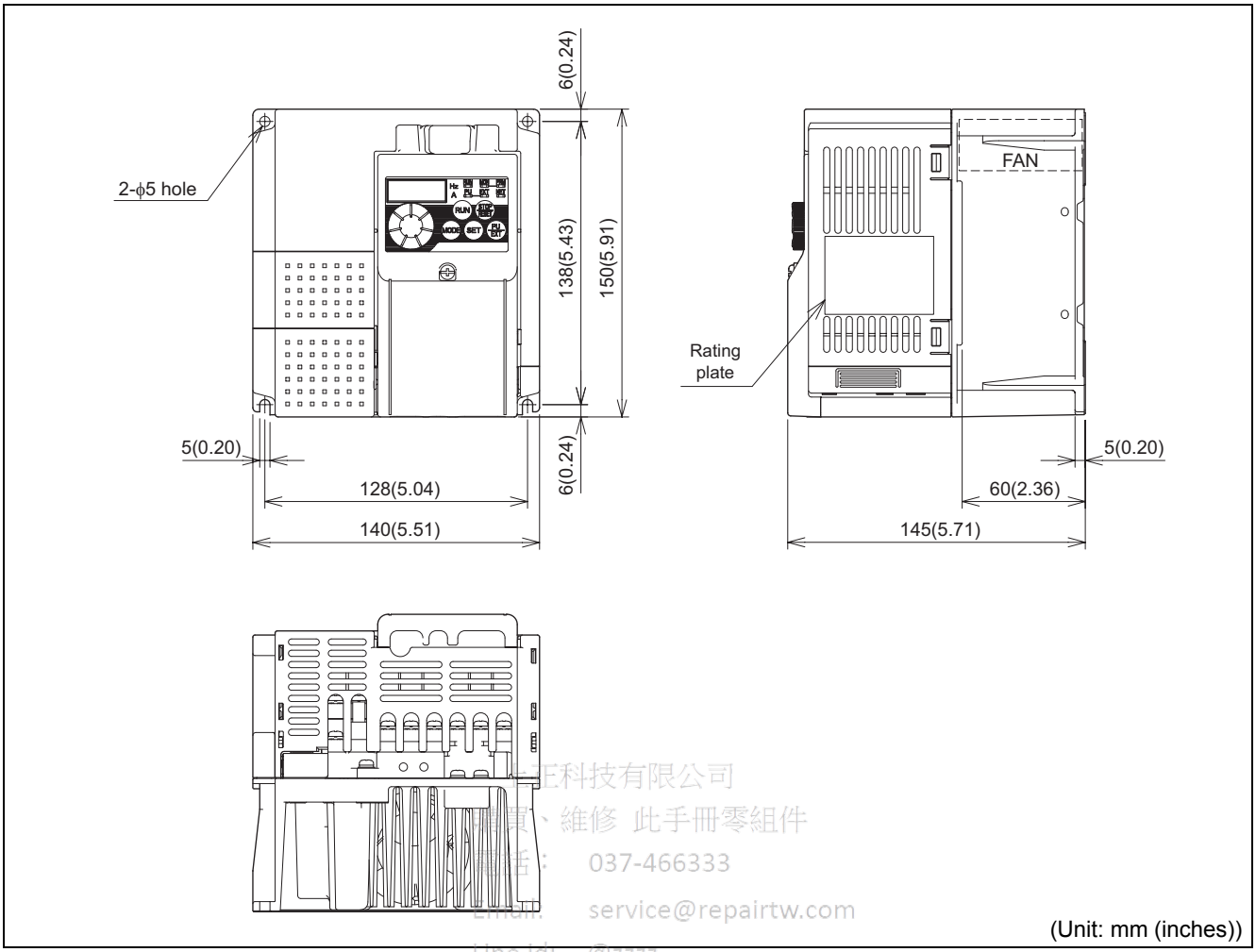

台王科技有限公司
購買、維修 此手冊零組件
電話： 037-466333
Email: service@repairtw.com
Line Id: @zzzz
www.repairtw.com

●FR-D720-238, 318
●FR-D740-120, 160

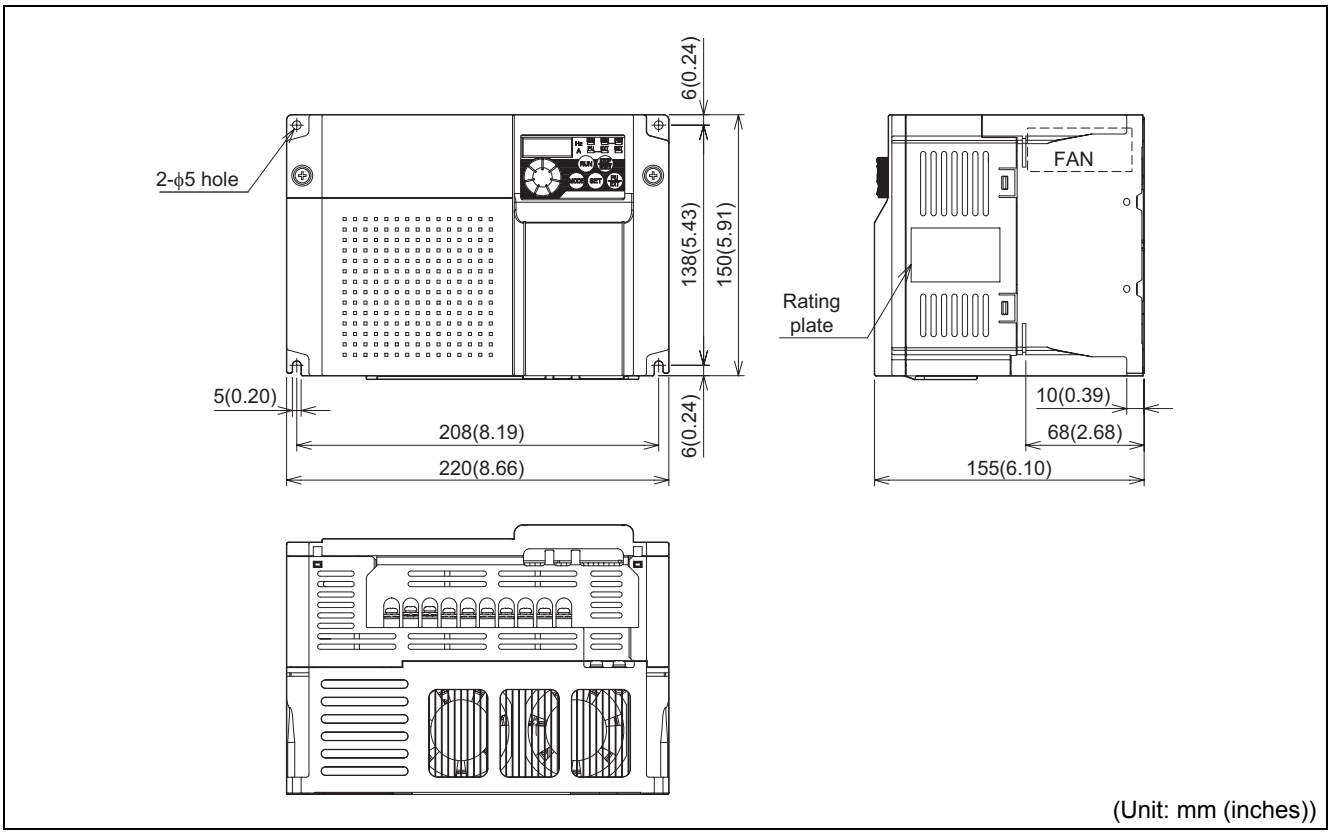

●Parameter unit (option) (FR-PU07)

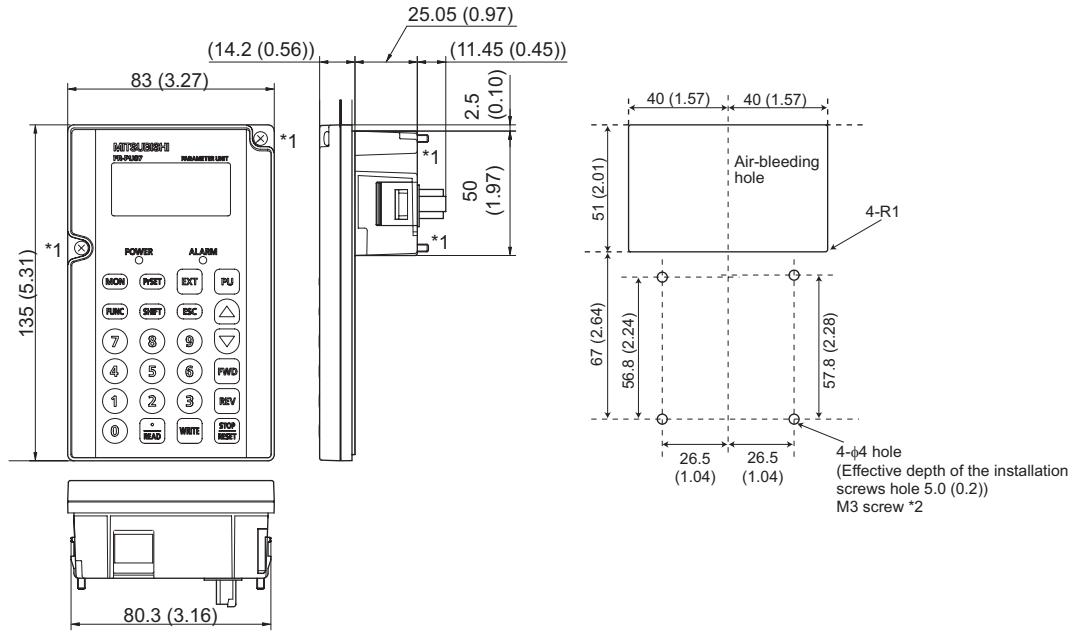

*1 When installing the FR-PU07 on the enclosure, etc., remove screws or fix the screws to the FR-PU07 with M3 nuts.

*2 Select the installation screw whose length will not exceed the effective depth of the installation screw hole.

(Unit: mm (inches))

上正科技有限公司
購買、維修、說明書零組件
電話： 037-466333
Email: service@repairtw.com
Line id: @zzzz
www.repairtw.com

●Enclosure surface operation panel (option) (FR-PA07)

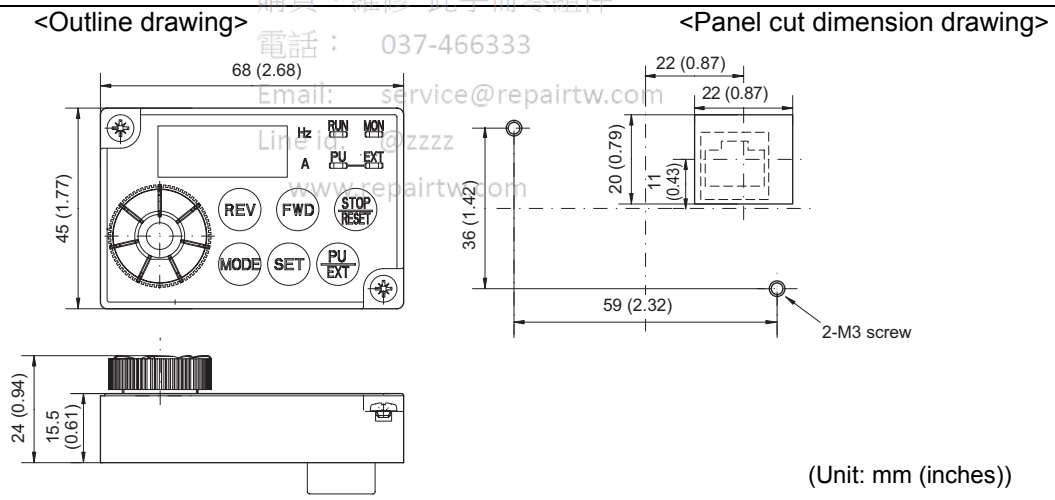

(Unit: mm (inches))

MEMO

上正科技有限公司
購買、維修 此手冊零組件
電話： 037-466333
Email: service@repairtw.com
Line id: @zzzz
www.repairtw.com

7 APPENDIX

This chapter provides the "APPENDIX" of this product.
Always read the instructions before using the equipment.

上正科技有限公司
購買、維修 此手冊零組件
電話： 037-466333
Email: service@repairtw.com
Line id: @zzzz
www.repairtw.com

Appendix1 Index

Numerics

15-speed selection (combination with three speeds RL, RM, RH)(REX signal) *89, 113*

A

Acceleration time, deceleration time setting (Pr. 7, Pr. 8, Pr. 20, Pr. 21, Pr. 44, Pr. 45) *96*
Acceleration/deceleration pattern (Pr. 29) *99*
Actual operation time *128*
Alarm output (LF signal) *119, 184, 200, 228*
Analog input fault (E.AIE) *258*
Analog input selection(Pr. 73, Pr. 267) *150*
Applied motor (Pr. 71, Pr. 450) *103*
Automatic restart after instantaneous power failure/flying start (Pr. 30, Pr. 57, Pr. 58, Pr. 96, Pr. 162, Pr. 165, Pr. 298, Pr. 299, Pr. 611) *136*
Avoid mechanical resonance points (frequency jumps) (Pr. 31 to Pr. 36) *84*

B

Base frequency, voltage (Pr. 3, Pr. 19, Pr. 47) *85*
Basic operation (factory setting) *53*
Bias and gain of frequency setting voltage (current) (Pr. 125, Pr. 126, Pr. 241, C2 (Pr. 902) to C7 (Pr. 905)) *153*
Brake transistor alarm detection (E.BE) *256*
Buzzer control (Pr. 990) *241*

C

Cables and wiring length *17*
Change the parameter setting value *55*
Changing the control logic *22*
Checking the inverter and converter modules *266*
Cleaning *266*
Command source switchover (turning on X67 makes Pr. 338 and Pr. 339 commands valid) (X67 signal) *113, 176*
Communication EEPROM write selection (Pr. 342) *187*
Condition selection of function validity by second function selection signal (RT signal) *116*
Connection of a DC reactor (FR-HEL) *35*
Connection of a dedicated external brake resistor (FR-ABR) *31*
Connection of the brake unit (FR-BU2) *33*
Connection of the high power factor converter (FR-HC) *34*
Connection of the power regeneration common converter (FR-CV) *35*
Connection to the PU connector *29*
Control circuit terminal *20*
Converter Output Voltage *128*
Converter output voltage peak value *128*
Cooling fan operation selection (Pr. 244) *228*
Cooling system types for inverter panel *10*
CPU fault (E.CPU) *258*
Cumulative energization time *128*
Cumulative power *128*
Current average value monitor signal (Pr. 555 to Pr. 557) *234*
Current average value monitor signal (Y93 signal) *119, 234*

D

Daily and periodic inspection *265*
Daily inspection *264*
Dancer control (Pr. 44, Pr. 45, Pr. 128 to Pr. 134) *220*
DC injection brake (Pr. 10 to Pr. 12) *109*
Detection of output frequency (SU, FU signal, Pr. 41 to Pr. 43) *123*
Display of the life of the inverter parts (Pr. 255 to Pr. 259) *229, 266*
During PID control activated (PID signal) *119, 212, 220*
During retry (Y64 signal) *119, 144*

E

Earth (ground) fault detection at start (Pr. 249) *146*
Easy operation mode setting (easy setting mode) *54*
Electronic thermal O/L relay pre-alarm (TH) *100, 252*
Electronic thermal O/L relay pre-alarm (THP signal) *100, 119*
Electronic Thermal Relay Function Load Factor *128*
EMC measures *40*
Extended parameter display (Pr. 160) *162*
External thermal relay input (OH signal) *100, 113*
External thermal relay operation (E.OHT) *100, 257*
External/NET operation switchover (turning on X66 selects NET operation) (X66 signal) *113, 173*

F

Fan alarm (FN) *228, 253*
Fan fault output (FAN signal) *119, 228*
Fault 5 (E.5) *258*
Fault or alarm indication *128, 244*
Fault output (ALM signal) *119, 122*
Fault output 3 (power-off signal) (Y91 signal) *119, 122*
Faults history (E.---) *244*
Fin overheat (E.FIN) *255*
Forward rotation command (assigned to STF terminal (Pr. 178) only) (STF signal) *113, 117*
Free parameter (Pr. 888, Pr. 889) *236*
Frequency setting value *128, 133*
Front cover *5*

G

General-purpose magnetic flux vector control (Pr. 71, Pr. 80) *75*

H

Heatsink overheat pre-alarm (FIN signal) *119, 255*
High speed operation command (RH signal) *89, 113*

I

Initial settings and specifications of RS-485 communication (Pr. 117 to Pr. 120, Pr. 123, Pr. 124, Pr. 549) *183*
Input phase loss (E.ILF) *146, 256*
Input terminal function selection(Pr. 178 to Pr. 182) *113*
Input Terminal Status *128*
Input/output phase loss protection selection (Pr. 251, Pr. 872) *146*
Inrush current limit circuit fault (E.IOH) *258*
Insulation resistance test using megger *275*
Inverter I/O Terminal Monitor *128, 131*
Inverter installation environment *8*
Inverter operation ready (RY signal) *119, 121*
Inverter output shutoff signal (MRS signal, Pr. 17) *115*
Inverter overload trip (electronic thermal relay function) (E.THT) *100, 255*
Inverter placement *11*
Inverter reset (Err.) *248, 251*
Inverter reset (RES signal) *113, 248*
Inverter run enable signal(FR-HC/FR-CV connection) (X10 signal) *110, 113*
Inverter running (RUN signal) *119, 121*
Inverter thermal load factor *128*

J

Jog operation (Pr. 15, Pr. 16) *91*
JOG operation selection (JOG signal) *91, 113*

L

Leakage currents and countermeasures *38*
Life alarm (Y90 signal) *119, 229*
Load pattern selection (Pr. 14) *87*
Low-speed operation command (RL signal) *89, 113*

上正科技有限公司
購買、維修 此手機零組件
電話：037-466333
Email: service@repairtw.com
www.repairtw.com

M

Magnitude of frequency change setting (Pr. 295) 240
Maintenance signal output (MT) 233, 252
Maintenance timer alarm (Pr. 503, Pr. 504) 233
Maintenance timer signal (Y95 signal) 119, 233
Manual torque boost (Pr. 0, Pr. 46) 73
Maximum/minimum frequency (Pr. 1, Pr. 2, Pr. 18) 83
Measurement of converter output voltage (across terminals P-N) 274
Measurement of currents 274
Measurement of inverter input power factor 274
Measurement of powers 273
Measurement of voltages and use of PT 273
Middle-speed operation command (RM signal) 89, 113
Mitsubishi inverter protocol (computer link communication) 188
Modbus RTU communication specifications (Pr. 117, Pr. 118, Pr. 120, Pr. 122, Pr. 343, Pr. 502, Pr. 549) 200
Monitor display selection of DU/PU and terminal AM (Pr. 52, Pr. 158, Pr. 170, Pr. 171, Pr. 268, Pr. 563, Pr. 564) 128
Motor Load Factor 128
Motor overheat protection (Electronic thermal O/L relay, PTC thermistor protection) (Pr. 9, Pr. 51, Pr. 561) 100
Motor overload trip (electronic thermal relay function) (E.THM) 100, 255
Motor thermal load factor 128
Motor Torque 128

N

Names and functions of the operation panel 52

O

Operation by multi-speed operation (Pr. 4 to Pr. 6, Pr. 24 to Pr. 27, Pr. 232 to Pr. 239) 89
Operation mode at power-on (Pr. 79, Pr. 340) 175
Operation mode selection (Pr. 79) 165
Operation panel frequency setting/key lock operation selection (Pr. 161) 238
Operation panel lock (HOLD) 238, 250
Operation selection at communication error occurrence (Pr. 121, Pr. 122, Pr. 502) 184
Optimum excitation control (Pr. 60) 147
Output current 128, 133
Output current detection (Y12 signal) 119, 124
Output current detection function (Y12 signal, Y13 signal, Pr. 150 to Pr. 153) 124
Output current detection value exceeded 258
Output Current Peak Value 128, 133
Output frequency 128, 133
Output frequency detection (FU signal) 119, 123
Output phase loss (E.LF) 146, 256
Output power 128
Output side earth (ground) fault overcurrent at start (E.GF) 146, 256
Output stop (MRS signal) 113, 115
Output terminal function selection (Pr. 190, Pr. 192) 119
Output Terminal Status 128
Output voltage 128
Overcurrent trip during acceleration (E.OC1) 253
Overcurrent trip during constant speed (E.OC2) 253
Overcurrent trip during deceleration or stop (E.OC3) 254
Overload alarm (OL signal) 79, 119

P

Parameter list 56
Parameter storage device fault (control circuit board) (E.PE) 257
Parameter write disable selection (Pr. 77) 161
Parameter write error (Er1 to Er4) 250
Password function 163
Password locked 250
Periodic inspection 264
Peripheral devices 4
PID control (Pr. 127 to Pr. 134, Pr. 575, Pr. 577) 212
PID control valid terminal (X14 signal) 113, 212, 220
PID Deviation 128, 212, 220
PID Forward/Reverse Rotation Output (RL signal) 119, 212, 220
PID lower limit (FDN signal) 119, 212, 220
PID Measured Value 128, 212, 220
PID Set Point 128, 212, 220
PID upper limit (FUP signal) 119, 212, 220
Power failure deceleration signal (Y46 signal) 119, 142
Power supply harmonics 42
Power-failure deceleration stop function (Pr. 261) 142
Pressure test 275
PTC thermistor operation 257
PTC thermistor resistance 100
PU contrast adjustment (Pr. 991) 241
PU disconnection (E.PUE) 158, 184, 257
PU display language selection(Pr. 145) 237
PU operation external interlock (X12 signal) 113, 165
PU stop (PS) 158, 252
PU/NET operation switchover (turning on X65 selects PU operation) (X65 signal) 113, 173
PU-external operation switchover (turning on X16 selects external operation) (X16) 113, 172
PWM carrier frequency and Soft-PWM control (Pr. 72, Pr. 240) 148

R

Reference of the terminal AM (analog voltage output) (Pr. 55, Pr. 56) 133
Reference voltage output 128, 134
Regeneration avoidance function (Pr. 665, Pr. 882, Pr. 883, Pr. 885, Pr. 886) 226
Regenerative brake duty 110, 128
Regenerative brake prealarm (RB) 110, 252
Regenerative brake prealarm (RBP signal) 110, 119
Regenerative overvoltage trip during acceleration (E.OV1) 226, 254
Regenerative overvoltage trip during constant speed (E.OV2) 226, 254
Regenerative overvoltage trip during deceleration or stop (E.OV3) 226, 254
Remote output (REM signal) 119, 126
Remote output selection (REM signal, Pr. 495, Pr. 496) 126
Remote setting (RH, RM, RL signal) 93, 113
Remote setting function (Pr. 59) 93
Replacement of parts 267
Reset selection/disconnected PU detection/PU stop selection (Pr. 75) 158
Response level of analog input and noise elimination (Pr. 74) 152
Retry count excess (E.RET) 144, 257
Retry function (Pr. 65, Pr. 67 to Pr. 69) 144
Reverse rotation command (assigned to STR terminal (Pr. 179) only) (STR signal) 113, 117
Reverse rotation prevention selection (Pr. 78) 162
RUN key rotation direction selection (Pr. 40) 237

S

Safety circuit fault (E.SAF) 258
Safety monitor output (SAFE signal) 119
Safety stop (SA) 253
Second function selection (RT signal) 113, 116
Selection of a regenerative brake (Pr. 30, Pr. 70) 110
Setting dial push 55
Slip compensation (Pr. 245 to Pr. 247) 78
Specification of main circuit terminal 15
Speed display and speed setting (Pr. 37) 127
Speed smoothing control (Pr. 653) 149
Stall prevention (E.OLT) 79, 256
Stall prevention (overcurrent) (OL) 79, 251
Stall prevention (overvoltage) (oL) 226, 251

上正科技有限公司
購買、維修此手冊
電話： 02-46633
Email: service@repairtw.com
Line id: @zzzz
www.repairtw.com

Stall prevention operation (Pr. 22, Pr. 23, Pr. 48, Pr. 66, Pr. 156, Pr. 157)....79
Start command source and frequency command source during communication operation (Pr. 338, Pr. 339, Pr. 551)....176
Start self-holding selection (STOP signal)....113, 117
Start signal operation selection (STF, STR, STOP signal, Pr. 250)....117
Starting frequency and start-time hold function (Pr. 13, Pr. 571)....98
Stop selection (Pr. 250)....112

T

Terminal 4 input selection (AU signal)....113, 150
Terminal AM calibration (calibration parameter C1 (Pr.901))....134
Terminal arrangement of the main circuit terminal, power supply and the motor wiring....15
Terminal connection diagram....14
To exhibit the best performance of the motor performance (offline auto tuning) (Pr. 71, Pr. 80, Pr. 82 to Pr. 84, Pr. 90, Pr. 96)....105

U

Undervoltage (UV)....252
Up-to-frequency signal (SU signal)....119, 123
Use of CT and transducer....274

V

V/F switchover (V/F cntrol is exercised when X18 is on) (X18 signal)....113

W

Wiring and configuation of PUconnector....180
Wiring cover....7
Wiring instructions....28
Wiring of control circuit....24

Z

Zero current detection (Y13 signal)....119, 124

上正科技有限公司
購買、維修 此手冊零組件
電話：037-466333
Email: service@repairtw.com
Line id: @zzzz
www.repairtw.com

MEMO

上正科技有限公司
購買、維修 此手冊零組件
電話： 037-466333
Email: service@repairtw.com
Line id: @zzzz
www.repairtw.com

REVISIONS

*The manual number is given on the bottom left of the back cover.

Print Date	*Manual Number	Revision
Sep., 2008	IB(NA)-0600368ENG-A	First edition

上正科技有限公司
購買、維修 此手冊零組件
電話： 037-466333
Email: service@repairtw.com
Line id: @zzzz
www.repairtw.com

⚠ **For Maximum Safety**

- Mitsubishi inverters are not designed or manufactured to be used in equipment or systems in situations that can affect or endanger human life.
- When considering this product for operation in special applications such as machinery or systems used in passenger transportation, medical, aerospace, atomic power, electric power, or submarine repeating applications, please contact your nearest Mitsubishi sales representative.
- Although this product was manufactured under conditions of strict quality control, you are strongly advised to install safety devices to prevent serious accidents when it is used in facilities where breakdowns of the product are likely to cause a serious accident.
- Please do not use this product for loads other than three-phase induction motors.