MITSUBISHI ELECTRIC

INVERTER
FR-A800
INSTRUCTION MANUAL (DETAILED)

FR-A820-00046(0.4K) to 04750(90K)
FR-A840-00023(0.4K) to 06830(280K)
FR-A846-00250(7.5K) to 00470(18.5K)

組件

airtw.com

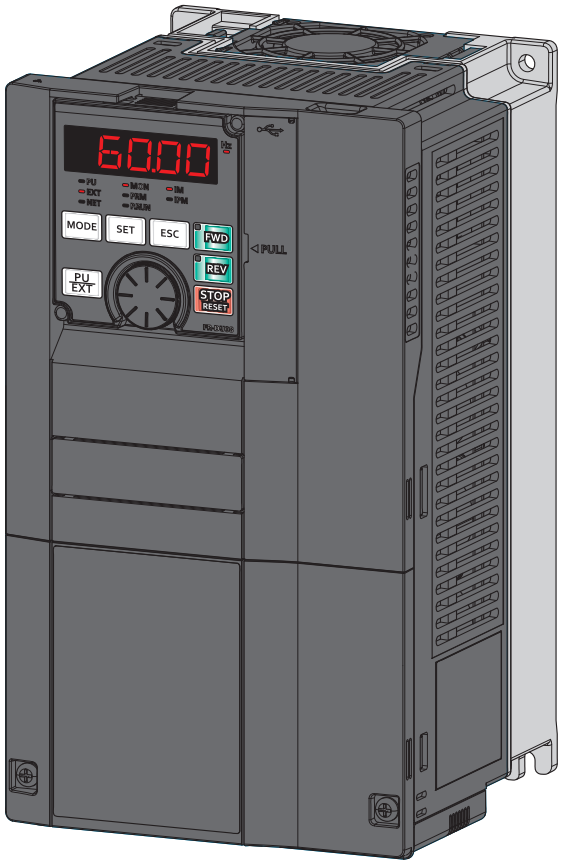

INTRODUCTION 1
INSTALLATION AND WIRING 2
PRECAUTIONS FOR USE OF THE INVERTER 3
BASIC OPERATION 4
PARAMETERS 5
PROTECTIVE FUNCTIONS 6
PRECAUTIONS FOR MAINTENANCE AND INSPECTION 7
SPECIFICATIONS 8

Thank you for choosing this Mitsubishi inverter.
This Instruction Manual (Detailed) provides instructions for advanced use of the FR-A800 series inverters.
Incorrect handling might cause an unexpected fault. Before using this inverter, always carefully read this Instruction Manual and the Instruction Manual (Startup) [IB-0600493] packed with the product to use the equipment to its optimum performance.

Safety Instructions

Do not attempt to install, operate, maintain or inspect the product until you have read through this Instruction Manual (Detailed) and appended documents carefully and can use the equipment correctly. Do not use this product until you have a full knowledge of the equipment, safety information and instructions.
Installation, operation, maintenance and inspection must be performed by qualified personnel. Here, an expert means a person who meets all the conditions below.
• A person who took a proper engineering training. Such training may be available at your local Mitsubishi Electric office. Contact your local sales office for schedules and locations.
• A person who can access operating manuals for the protective devices (e.g. light curtain) connected to the safety control system. A person who has read and familiarized himself/herself with the manuals.

In this Instruction Manual (Detailed), the safety instruction levels are classified into "Warning" and "Caution"

⚠Warning Incorrect handling may cause hazardous conditions, resulting in death or severe injury.

⚠Caution Incorrect handling may cause hazardous conditions, resulting in medium or slight injury, or may cause only material damage.

The **⚠Caution** level may even lead to a serious consequence according to conditions. Both instruction levels must be followed because these are important to personal safety.

◆ Electric Shock Prevention

⚠Warning

- While the inverter power is ON, do not open the front cover or the wiring cover. Do not run the inverter with the front cover or the wiring cover removed. Otherwise you may access the exposed high voltage terminals or the charging part of the circuitry and get an electric shock.
- Even if power is OFF, do not remove the front cover except for wiring or periodic inspection. You may accidentally touch the charged inverter circuits and get an electric shock.
- Before wiring or inspection, LED indication of the operation panel must be switched OFF. Any person who is involved in wiring or inspection shall wait for at least 10 minutes after the power supply has been switched OFF and check that there are no residual voltage using a tester or the like. The capacitor is charged with high voltage for some time after power OFF, and it is dangerous.
- This inverter must be earthed (grounded). Earthing (grounding) must conform to the requirements of national and local safety regulations and electrical code (NEC section 250, IEC 536 class 1 and other applicable standards). A neutral-point earthed (grounded) power supply for 400V class inverter in compliance with EN standard must be used.
- Any person who is involved in wiring or inspection of this equipment shall be fully competent to do the work.
- The inverter must be installed before wiring. Otherwise you may get an electric shock or be injured.
- Setting dial and key operations must be performed with dry hands to prevent an electric shock. Otherwise you may get an electric shock.
- Do not subject the cables to scratches, excessive stress,heavy loads or pinching. Otherwise you may get an electric shock.
- Do not change the cooling fan while power is ON. It is dangerous to change the cooling fan while power is ON.
- Do not touch the printed circuit board or handle the cables with wet hands. Otherwise you may get an electric shock.
- When measuring the main circuit capacitor capacity, the DC voltage is applied to the motor for 1s at powering OFF. Never touch the motor terminal, etc. right after powering OFF to prevent an electric shock.
- An PM motor is a synchronous motor with high-performance magnets embedded in the rotor. Motor terminals holds high-voltage while the motor is running even after the inverter power is turned OFF. Before wiring or inspection, the motor must be confirmed to be stopped. In an application, such as fan and blower, where the motor is driven by the load, a low-voltage manual motor starter must be connected at the inverter's output side, and wiring and inspection must be performed while the motor starter is open. Otherwise you may get an electric shock.

◆ Fire Prevention

⚠Caution

- Inverter must be installed on a nonflammable wall without holes (so that nobody touches the inverter heatsink on the rear side, etc.). Mounting it to or near flammable material may cause a fire.
- If the inverter has become faulty, the inverter power must be switched OFF. A continuous flow of large current may cause a fire.
- When using a brake resistor, a sequence that will turn OFF power when a fault signal is output must be configured. Otherwise the brake resistor may excessively overheat due to damage of the brake transistor and such, causing a fire.
- Do not connect a resistor directly to the DC terminals P/+ and N/-. Doing so could cause a fire.
- Be sure to perform daily and periodic inspections as specified in the Instruction Manual. If a product is used without any inspection, a burst, breakage, or a fire may occur.

◆ Injury Prevention

⚠Caution

- The voltage applied to each terminal must be the ones specified in the Instruction Manual. Otherwise burst, damage, etc. may occur.
- The cables must be connected to the correct terminals. Otherwise burst, damage, etc. may occur.
- The polarity (+ and -) must be correct. Otherwise burst, damage, etc. may occur.
- While power is ON or for some time after power-OFF, do not touch the inverter as it will be extremely hot. Touching these devices may cause a burn.

◆ Additional Instructions

The following instructions must be also followed. If the product is handled incorrectly, it may cause unexpected fault, an injury, or an electric shock.

⚠Caution

Transportation and Mounting

- Any person who is opening a package using a sharp object, such as a knife and cutter, must wear gloves to prevent injuries caused by the edge of the sharp object.
- The product must be transported in correct method that corresponds to the weight. Failure to do so may lead to injuries.
- Do not stand or rest heavy objects on the product.
- Do not stack the boxes containing inverters higher than the number recommended.
- When carrying the inverter, do not hold it by the front cover; it may fall off or fail.
- During installation, caution must be taken not to drop the inverter as doing so may cause injuries.
- The product must be installed on the surface that withstands the weight of the inverter.
- Do not install the product on a hot surface.
- The mounting orientation of the inverter must be correct.
- The inverter must be installed on a strong surface securely with screws so that it will not drop.
- Do not install or operate the inverter if it is damaged or has parts missing.
- Foreign conductive objects must be prevented from entering the inverter. That includes screws and metal fragments or other flammable substance such as oil.
- As the inverter is a precision instrument, do not drop or subject it to impact.
- The surrounding air temperature for LD,ND (initial setting), and HD models must be between -10 and +50°C (non-freezing). The surrounding air temperature for SLD must be between -10 and +40°C (non-freezing). Otherwise the inverter may be damaged.
- The ambient humidity must be 95%RH or less (non-condensing). Otherwise the inverter may be damaged. (Refer to page 26 for details.)

上正科技有限公司 購買、維修 此手冊服務 Tel: 037-460838 Email: service@repairw.com Line ID: @zzzz www.repairtw.com

⚠ Caution

Transportation and Mounting

- The storage temperature (applicable for a short time, e.g. during transit) must be between -20 and +65°C. Otherwise the inverter may be damaged.
- The inverter must be used indoors (without corrosive gas, flammable gas, oil mist, dust and dirt etc.) Otherwise the inverter may be damaged.
- The inverter must be used at an altitude of 2500 m or less above sea level, with 5.9m/s^2 or less*1 vibration at 10 to 55Hz (directions of X, Y, Z axes). Otherwise the inverter may be damaged. (Refer to page 26 for details.)
- If halogen-based materials (fluorine, chlorine, bromine, iodine, etc.) infiltrate into a Mitsubishi product, the product will be damaged. Halogen-based materials are often included in fumigant, which is used to sterilize or disinfest wooden packages. When packaging, prevent residual fumigant components from being infiltrated into Mitsubishi products, or use an alternative sterilization or disinfection method (heat disinfection, etc.) for packaging. Sterilization of disinfection of wooden package should also be performed before packaging the product.

Wiring

- Do not install a power factor correction capacitor or surge suppressor/capacitor type filter on the inverter output side. These devices on the inverter output side may be overheated or burn out.
- The output side terminals (terminals U, V, and W) must be connected correctly. Otherwise the motor will rotate inversely.
- PM motor terminals (U, V, W) hold high-voltage while the PM motor is running even after the power is turned OFF. Before wiring, the PM motor must be confirmed to be stopped. Otherwise you may get an electric shock.
- Never connect an PM motor to the commercial power supply.
  Applying the commercial power supply to input terminals (U,V, W) of an PM motor will burn the PM motor. The PM motor must be connected with the output terminals (U, V, W) of the inverter.

Trial run

- Before starting operation, each parameter must be confirmed and adjusted. A failure to do so may cause some machines to make unexpected motions.

*1 2.9 m/s^2 or less for the FR-A840-04320(160K) or higher.

⚠ Warning

Usage

- Everyone must stay away from the equipment when the retry function is set as it will restart suddenly after a trip.
- STOP RESET Since pressing a key may not stop output depending on the function setting status, separate circuit and switch that make an emergency stop (power OFF, mechanical brake operation for emergency stop, etc.) must be provided.
- OFF status of the start signal must be confirmed before resetting the inverter fault. Resetting inverter fault with the start signal ON restarts the motor suddenly.
- Do not use an PM motor for an application where the PM motor is driven by its load and runs at a speed higher than the maximum motor speed.
- Use this inverter only with three-phase induction motors or with an PM motor. Connection of any other electrical equipment to the inverter output may damage the equipment.
- Performing pre-excitation (LX signal and X13 signal) under torque control (Real sensorless vector control) may start the motor running at a low speed even when the start command (STF or STR) is not input The motor may run also at a low speed when the speed limit value = 0 with a start command input. It must be confirmed that the motor running will not cause any safety problem before performing pre-excitation.
- Do not modify the equipment.
- Do not perform parts removal which is not instructed in this manual. Doing so may lead to fault or damage of the product.

⚠ Caution

Usage

- The electronic thermal relay function does not guarantee protection of the motor from overheating. It is recommended to install both an external thermal and PTC thermistor for overheat protection.
- Do not use a magnetic contactor on the inverter input for frequent starting/stopping of the inverter. Otherwise the life of the inverter decreases.
- The effect of electromagnetic interference must be reduced by using a noise filter or by other means. Otherwise nearby electronic equipment may be affected.
- Appropriate measures must be taken to suppress harmonics. Otherwise power supply harmonics from the inverter may heat/damage the power factor correction capacitor and generator.
- When driving a 400V class motor by the inverter, the motor must be an insulation-enhanced motor or measures must be taken to suppress surge voltage. Surge voltage attributable to the wiring constants may occur at the motor terminals, deteriorating the insulation of the motor.
- When parameter clear or all parameter clear is performed, the required parameters must be set again before starting operations. because all parameters return to their initial values.
- The inverter can be easily set for high-speed operation. Before changing its setting, the performances of the motor and machine must be fully examined.
- Stop status cannot be hold by the inverter's brake function. In addition to the inverter's brake function, a holding device must be installed to ensure safety.
- Before running an inverter which had been stored for a long period, inspection and test operation must be performed.
- Static electricity in your body must be discharged beforeyou touch the product.
- Only one PM motor can be connected to an inverter.
- An PM motor must be used under PM sensorless vector control. Do not use a synchronous motor, induction motor, or synchronous induction motor.
- Do not connect an PM motor in the induction motor control settings (initial settings). Do not use an induction motor in the PM sensorless vector control settings. It will cause a failure.
- In the system with an PM motor, the inverter power must be turned ON before closing the contacts of the contactor at the output side.

Emergency stop

- A safety backup such as an emergency brake must be provided to prevent hazardous conditions to the machine and equipment in case of inverter failure.
- When the breaker on the inverter input side trips, thewiring must be checked for fault (short circuit), and internalparts of the drive unit for a damage, etc. The cause of the trip must be identified and removed before turning ON the power of the breaker.
- When a protective function activates, take an appropriate corrective action, then reset the inverter, and resume the operation.

Maintenance, inspection and parts replacement

- Do not carry out a megger (insulation resistance) test on the control circuit of the inverter. It will cause a failure.

Disposal

- The inverter must be treated as industrial waste.

General instruction

- Many of the diagrams and drawings in the Instruction Manual show the product without a cover or partially open for explanation. Never operate the product in this manner. The cover must be always reinstalled and the instruction in the Instruction Manual must be followed when operating the product. For more details on the PM motor, refer to the Instruction Manual of the PM motor.

上元科技有限公司
購買、維修 此為代理商
電話: 037-462***
Email: service@repairtw.com
Line id: @zzz***
www.repairtw.com

CONTENTS

1 INTRODUCTION 11

1.1 Product checking and accessories 12

1.2 Component names 14

1.3 Operation steps 15

1.4 About the related manuals 16

2 INSTALLATION AND WIRING 17

2.1 Peripheral devices 18

2.1.1 Inverter and peripheral devices 18
2.1.2 Peripheral devices 20

2.2 Removal and reinstallation of the front cover 22

2.3 Installation of the inverter and enclosure design 26

2.3.1 Inverter installation environment 26
2.3.2 Cooling system types for inverter enclosure 28
2.3.3 Inverter installation 29
2.3.4 Heatsink protrusion attachment procedure 31

2.4 Terminal connection diagrams 33

2.5 Main circuit terminals 37

2.5.1 Details on the main circuit terminals 37
2.5.2 Terminal layout of the main circuit terminals, wiring of power supply and the motor 38
2.5.3 Applicable cables and the wiring length 41
2.5.4 Earthing (grounding) precautions 44

2.6 Control circuit 45

2.6.1 Details on the control circuit terminals 45
2.6.2 Control logic (sink/source) change 49
2.6.3 Wiring of control circuit 51
2.6.4 Wiring precautions 53
2.6.5 When using separate power supplies for the control circuit and the main circuit 54
2.6.6 When supplying 24 V external power to the control circuit 56
2.6.7 Safety stop function 57

2.7 Communication connectors and terminals 59

2.7.1 PU connector 59
2.7.2 USB connector 60
2.7.3 RS-485 terminal block 61

2.8 Connection of motor with encoder (vector control) 62

2.9 Connection of stand-alone option units 71

2.9.1 Connection of the dedicated external brake resistor (FR-ABR) 71
2.9.2 Connection of the brake unit (FR-BU2) 73
2.9.3 Connection of the brake unit (FR-BU) 75
2.9.4 Connection of the brake unit (BU type) 75
2.9.5 Connection of the high power factor converter (FR-HC2) 76
2.9.6 Connection of the power regeneration common converter (FR-CV) 77
2.9.7 Connection of the power regeneration converter (MT-RC) 78

上正科技有限公司
購買、維修 此手冊零組件
電話： 037-466333
Email: service@repairtw.com
Line Id: @zzzz
www.repairtw.com

2.9.8 Connection of the DC reactor (FR-HEL) 79

3 PRECAUTIONS FOR USE OF THE INVERTER 81

3.1 Electro-magnetic interference (EMI) and leakage currents 82
3.1.1 Leakage currents and countermeasures 82
3.1.2 Countermeasures against inverter-generated EMI 84
3.1.3 Built-in EMC filter 86

3.2 Power supply harmonics 87
3.2.1 Power supply harmonics 87
3.2.2 Harmonic suppression guidelines in Japan 88

3.3 Installation of a reactor 90

3.4 Power-OFF and magnetic contactor (MC) 91

3.5 Countermeasures against deterioration of the 400 V class motor insulation 92

3.6 Checklist before starting operation 93

3.7 Failsafe system which uses the inverter 95

4 BASIC OPERATION 97

4.1 Operation panel (FR-DU08) 98
4.1.1 Components of the operation panel (FR-DU08) 98
4.1.2 Basic operation of the operation panel 99
4.1.3 Correspondences between digital and actual characters 100
4.1.4 Changing the parameter setting value 101

4.2 Monitoring the inverter status 102
4.2.1 Monitoring of output current and output voltage 102
4.2.2 First monitored item 102
4.2.3 Displaying the set frequency 102

4.3 Easy operation mode setting (easy setting mode) 103

4.4 Frequently-used parameters (simple mode parameters) 104
4.4.1 Simple mode parameter list 104

4.5 Basic operation procedure (PU operation) 106
4.5.1 Operating at a set frequency (example: operating at 30 Hz) 106
4.5.2 Using the setting dial like a potentiometer to perform operation 107
4.5.3 Setting the frequency by switches (multi-speed setting) 108
4.5.4 Setting the frequency with analog signals (voltage input) 109
4.5.5 Using an analog signal (current input) to give a frequency command 110

4.6 Basic operation procedure (External operation) 111
4.6.1 Using the frequency set by the operation panel 111
4.6.2 Setting the frequency by switches (multi-speed setting) (Pr.4 to Pr.6) 113
4.6.3 Setting the frequency with analog signals (voltage input) 114
4.6.4 Changing the frequency (60 Hz, initial value) at the maximum voltage input (5 V, initial value) 115
4.6.5 Using an analog signal (current input) to give a frequency command 116
4.6.6 Changing the frequency (60 Hz, initial value) at the maximum current input (at 20 mA, initial value) 117

上正科技有限公司
購買、維修 此手冊零組件
電話： 037-466333
Email: service@repairtw.com
Line Id: @zzzz
www.repairtw.com

4.7 Basic operation procedure (JOG operation) 118
4.7.1 Performing JOG operation using external signals 118
4.7.2 JOG operation from the operation panel 119

5 PARAMETERS 121

5.1 Parameter List 122
5.1.1 Parameter list (by parameter number) 122
5.1.2 Group parameter display 144
5.1.3 Parameter list (by function group) 145

5.2 Control method 154
5.2.1 Vector control and Real sensorless vector control 157
5.2.2 Changing the control method 160
5.2.3 Selecting the Advanced magnetic flux vector control 167
5.2.4 Selecting the PM sensorless vector control 169
5.2.5 Low-speed range torque characteristics 173

5.3 Speed control under Real sensorless vector control, vector control, PM sensorless vector control 174
5.3.1 Setting procedure of Real sensorless vector control (speed control) 177
5.3.2 Setting procedure of vector control (speed control) 178
5.3.3 Setting procedure of PM sensorless vector control (speed control) 179
5.3.4 Setting the torque limit level under speed control 181
5.3.5 Performing high-accuracy, fast-response control (gain adjustment for Real sensorless vector control, vector control and PM sensorless vector control) 188
5.3.6 Troubleshooting in the speed control 194
5.3.7 Speed feed forward control and model adaptive speed control 196
5.3.8 Torque bias 198
5.3.9 Avoiding motor overrunning 202
5.3.10 Notch filter 204

5.4 Torque control under Real sensorless vector control and vector control 205
5.4.1 Torque control 205
5.4.2 Setting procedure of Real sensorless vector control (torque control) 209
5.4.3 Setting procedure for vector control (torque control) 210
5.4.4 Torque command 211
5.4.5 Speed limit 213
5.4.6 Torque control gain adjustment 219
5.4.7 Troubleshooting in torque control 221
5.4.8 Torque control by variable-current limiter control 222

5.5 Position control under vector control and PM sensorless vector control 223
5.5.1 About position control 223
5.5.2 Setting procedure of vector control (position control) 225
5.5.3 Set the procedure of PM sensorless vector control (position control) 226
5.5.4 Simple positioning function by parameters 227
5.5.5 Position control by inverter pulse train input 239
5.5.6 Electronic gear setting 242
5.5.7 Position adjustment parameter settings 244
5.5.8 Position control gain adjustment 245
5.5.9 Troubleshooting in position control 246

5.6 Real sensorless vector control, vector control, PM sensorless vector control adjustment 248
5.6.1 Speed detection filter and torque detection filter 248
5.6.2 Excitation ratio 249

上准科技有限公司
購買、維修 此手冊零組件
電話： 037-466333
Email: service@repairtw.com
Line id: @zzzz

5.7 (E) Environment setting parameters 250
5.7.1 Simple clock function 251
5.7.2 Reset selection/disconnected PU detection/PU stop selection 252
5.7.3 PU display language selection 254
5.7.4 Buzzer control 254
5.7.5 PU contrast adjustment 254
5.7.6 Display-off mode 255
5.7.7 Resetting USB host errors 255
5.7.8 Setting dial potentiometer mode/key lock operation selection 256
5.7.9 Frequency change increment amount setting 257
5.7.10 Multiple rating setting 258
5.7.11 Using the power supply exceeding 480V 259
5.7.12 Parameter write selection 260
5.7.13 Password function 262
5.7.14 Free parameter 264
5.7.15 Setting multiple parameters as a batch 264
5.7.16 Extended parameter display and user group function 268
5.7.17 PWM carrier frequency and Soft-PWM control 270
5.7.18 Inverter parts life display 271
5.7.19 Maintenance timer alarm 274
5.7.20 Current average value monitor signal 275

5.8 (F) Setting of acceleration/deceleration time and acceleration/deceleration pattern 278
5.8.1 Setting the acceleration and deceleration time 278
5.8.2 Acceleration/deceleration pattern 283
5.8.3 Remote setting function 288
5.8.4 Starting frequency and start-time hold function 291
5.8.5 Minimum motor speed frequency and hold function at the motor start up 292
5.8.6 Shortest acceleration/deceleration and optimum acceleration/deceleration (automatic acceleration/deceleration) 293
5.8.7 Lift operation (automatic acceleration/deceleration) 296

5.9 (D) Operation command and frequency command 298
5.9.1 Operation mode selection 299
5.9.2 Startup in Network operation mode at power-ON 307
5.9.3 Start command source and frequency command source during communication operation 308
5.9.4 Reverse rotation prevention selection 314
5.9.5 Frequency setting via pulse train input 315
5.9.6 JOG operation 318
5.9.7 Operation by multi-speed setting 319

5.10 (H) Protective function parameter 321
5.10.1 Motor overheat protection (electronic thermal O/L relay) 322
5.10.2 Fault definition 328
5.10.3 Cooling fan operation selection 329
5.10.4 Earth (ground) fault detection at start 330
5.10.5 Varying the activation level of the undervoltage protective function 330
5.10.6 Initiating a protective function 330
5.10.7 I/O phase loss protection selection 331
5.10.8 Retry function 332
5.10.9 Limiting the output frequency (maximum/minimum frequency) 334
5.10.10 Avoiding the mechanical resonance points (frequency jump) 335
5.10.11 Stall prevention operation 336
5.10.12 Motor overspeeding detection 342

5.11 (M) Monitor display and monitor output signal 343
5.11.1 Speed display and rotations per minute setting 344
5.11.2 Monitor indicator selection using operation panel or via communication 346
5.11.3 Monitor output to Terminal FM/CA and FM/AM 356

上正科技有限公司
www.repairtw.com

5.11.4 Monitor display selection for terminals FM/CA and FM/AM 361
5.11.5 Energy saving monitor 365
5.11.6 Output terminal function selection 370
5.11.7 Output frequency detection 378
5.11.8 Output current detection function 381
5.11.9 Output torque detection 383
5.11.10 Remote output function 384
5.11.11 Analog remote output function 385
5.11.12 Fault code output selection 387
5.11.13 Pulse train output of output power 388
5.11.14 Detection of control circuit temperature 389

5.12 (T) Multi-Function Input Terminal Parameters 390

5.12.1 Analog input selection 391
5.12.2 Analog input terminal (terminal 1, 4) function assignment 395
5.12.3 Analog input compensation 396
5.12.4 Analog input responsiveness and noise elimination 398
5.12.5 Frequency setting voltage (current) bias and gain 400
5.12.6 Bias and gain for torque (magnetic flux) and set voltage (current) 406
5.12.7 Checking of current input on analog input terminal 412
5.12.8 Input terminal function selection 416
5.12.9 Inverter output shutoff signal 419
5.12.10 Selecting operation condition of the second function selection signal (RT) and the third function selection signal (X9) 420
5.12.11 Start signal operation selection 422

5.13 (C) Motor constant parameters 424

5.13.1 Applied motor (Pr.71, Pr.450) 424
5.13.2 Offline auto tuning 428
5.13.3 Offline auto tuning for a PM motor (motor constants tuning) 438
5.13.4 Online auto tuning 445
5.13.5 Signal loss detection of encoder signals 448

5.14 (A) Application parameters 449

5.14.1 Commercial power supply-inverter switchover function 450
5.14.2 Self power management 455
5.14.3 Brake sequence function 457
5.14.4 Stop-on-contact control 462
5.14.5 Load torque high speed frequency control 465
5.14.6 Traverse function 467
5.14.7 Vibration contarol 469
5.14.8 Orientation control 471
5.14.9 PID control 483
5.14.10 Changing the display increment of the numerical values used in PID control 496
5.14.11 PID pre-charge function 499
5.14.12 Dancer control 503
5.14.13 Automatic restart after instantaneous power failure/flying start with an induction control 511
5.14.14 Automatic restart after instantaneous power failure/flying start with an IPM motor 517
5.14.15 Offline auto tuning for a frequency search 519
5.14.16 Power failure time deceleration-to-stop function 523
5.14.17 PLC function 527
5.14.18 Trace function 529

5.15 (N) Operation via communication and its settings 536

5.15.1 Wiring and configuration of PU connector 536
5.15.2 Wiring and configuration of RS-485 terminals 538
5.15.3 Initial setting of operation via communication 541
5.15.4 Initial settings and specifications of RS-485 communication 544
5.15.5 Mitsubishi inverter protocol (computer link communication) 546
5.15.6 Modbus-RTU communication specification 560

上正科技有限公司
購買、維修 此手冊零組件
電話： 037 466333
Email: service@repairtw.com
Line Id: @zzzz
www.repairtw.com

5.15.7 USB device communication 574
5.15.8 Automatic connection with GOT 575

5.16 (G) Control parameters 576

5.16.1 Manual torque boost 577
5.16.2 Base frequency, voltage 578
5.16.3 Load pattern selection 580
5.16.4 Energy saving control 582
5.16.5 Adjustable 5 points V/F 583
5.16.6 DC injection brake, zero speed control, and servo lock 584
5.16.7 Output stop function 590
5.16.8 Stop selection 592
5.16.9 Regenerative brake selection and DC feeding mode 593
5.16.10 Regeneration avoidance function 599
5.16.11 Increased magnetic excitation deceleration 601
5.16.12 Slip compensation 602
5.16.13 Encoder feedback control 603
5.16.14 Droop control 605
5.16.15 Speed smoothing control 607

5.17 Parameter clear / all parameter clear 608

5.18 Copying and verifying parameters on the operation panel 609

5.18.1 Parameter copy 609
5.18.2 Parameter verification 611

5.19 Copying and verifying parameters using USB memory 612

5.20 Checking parameters changed from their initial values (Initial value change list) 615

6 PROTECTIVE FUNCTIONS 617

6.1 Inverter fault and alarm indications 618

6.2 Reset method for the protective functions 618

6.3 Check and clear of the faults history 619

6.4 Faults history and the list of fault displays 621

6.5 Causes and corrective actions 623

6.6 Check first when you have a trouble 643

6.6.1 Motor does not start 643
6.6.2 Motor or machine is making abnormal acoustic noise 645
6.6.3 Inverter generates abnormal noise 645
6.6.4 Motor generates heat abnormally 646
6.6.5 Motor rotates in the opposite direction 646
6.6.6 Speed greatly differs from the setting 646
6.6.7 Acceleration/deceleration is not smooth 647
6.6.8 Speed varies during operation 648
6.6.9 Operation mode is not changed properly 649
6.6.10 Operation panel (FR-DU08) display is not operating 649
6.6.11 Motor current is too large 649
6.6.12 Speed does not accelerate 650
6.6.13 Unable to write parameter setting 651
6.6.14 Power lamp is not lit 651

上正科技有限公司
購買、維修 此手冊零組件
電話： 037-466333
Email: service@repairtw.com
Line id: @zzzz
www.repairtw.com

7 PRECAUTIONS FOR MAINTENANCE AND INSPECTION 653

7.1 Inspection item 654
7.1.1 Daily inspection....654
7.1.2 Periodic inspection....654
7.1.3 Daily and periodic inspection....655
7.1.4 Checking the inverter and converter modules....657
7.1.5 Cleaning....657
7.1.6 Replacement of parts....658
7.1.7 Inverter replacement....662

7.2 Measurement of main circuit voltages, currents and powers 663
7.2.1 Measurement of powers....665
7.2.2 Measurement of voltages and use of PT....665
7.2.3 Measurement of currents....666
7.2.4 Use of CT and transducer....666
7.2.5 Measurement of inverter input power factor....666
7.2.6 Measurement of converter output voltage (across terminals P and N)....666
7.2.7 Measurement of inverter output frequency....667
7.2.8 Insulation resistance test using megger....667
7.2.9 Pressure test....667

8 SPECIFICATIONS 669

8.1 Inverter rating 670

8.2 Motor rating 672

8.3 Common specifications 675

8.4 Outline dimension drawings 677
8.4.1 Inverter outline dimension drawings....677
8.4.2 Dedicated motor outline dimension drawings....682

APPENDIX 687

Appendix1 For customers replacing the conventional model with this inverter.... 688
Appendix 1.1 Replacement of the FR-A700 series....688
Appendix 1.2 Replacement of the FR-A500(L) series....689

Appendix2 Specification comparison between PM sensorless vector control and induction motor control.... 690

Appendix3 Parameters (function codes) and instruction codes under different control methods.... 691

Appendix4 For customers using HMS network options.... 708

上正科技有限公司
購買、維修 此手冊零組件
電話： 037-466333
Email: service@repairtw.com
Line id: @zzzz
www.repairtw.com

MEMO

上正科技有限公司
購買、維修 此手冊零組件
電話： 037-466333
Email: service@repairtw.com
Line id: @zzzz
www.repairtw.com

1 INTRODUCTION

This chapter contains the descriptions that must be read before using this product.
Always read the instructions before using the equipment.
For "INTRODUCTION" of the IP55 compatible model, refer to FR-A806 Instruction Manual (Hardware).

上正科技有限公司
購買、維修 此手冊零組件
電話： 037-466333
Email: service@repairtw.com
Line id: @zzzz
www.repairtw.com

1.1 Product checking and accessories.....12
1.2 Component names.....14
1.3 Operation steps.....15

<Abbreviations>

DU	Operation panel (FR-DU08)
PU	Operation panel (FR-DU08) and parameter unit (FR-PU07)
Inverter	Mitsubishi inverter FR-A800 series
Pr.	Parameter number (Number assigned to function)
PU operation	Operation using the PU (FR-DU08/FR-PU07)
External operation	Operation using the control circuit signals
Combined operation	Combined operation using the PU (FR-DU08/FR-PU07) and External operation
Mitsubishi standard motor	SF-JR
Mitsubishi constant-torque motor	SF-HRCA
Vector control dedicated motor	SF-V5RU
Mitsubishi IPM motor	MM-CF

<Trademarks>

- Microsoft and Visual C++ are registered trademarks of Microsoft Corporation in the United States and other countries.
- Other company and product names herein are the trademarks and registered trademarks of their respective owners.

<Notes on descriptions in this Instruction Manual>

- Connection diagrams in this Instruction Manual suppose that the control logic of the input terminal is the sink logic, unless otherwise specified. (For the control logic, refer to **page 49**.)

Harmonic Suppression Guidelines
All the models of the inverters used by specific consumers are covered by "the Harmonic Suppression Guidelines for Consumers Who Receive High Voltage or Special High Voltage". (For details, refer to **page 88**.)

1.1 Product checking and accessories

Unpack the product and check the capacity plate on the front cover and the rating plate on the side to ensure that the model agrees with the order and the product is intact.

●Inverter model

Symbol	Voltage class
2	200V class
4	400V class

Symbol	Structure, functionality
0	Standard model
6	IP55 compatible model

Symbol	Description
0.4K to 280K	ND rated inverter capacity (kW)
00023 to 06830	SLD rated inverter current (A)

Symbol	Type*1
-1	FM
-2	CA

FR-A820-0.4K-1 □

Symbol	Circuit board coating (3C2)	Plated conductor
Not used	Not used	Not used
-60	With	Not used
-06	With	With

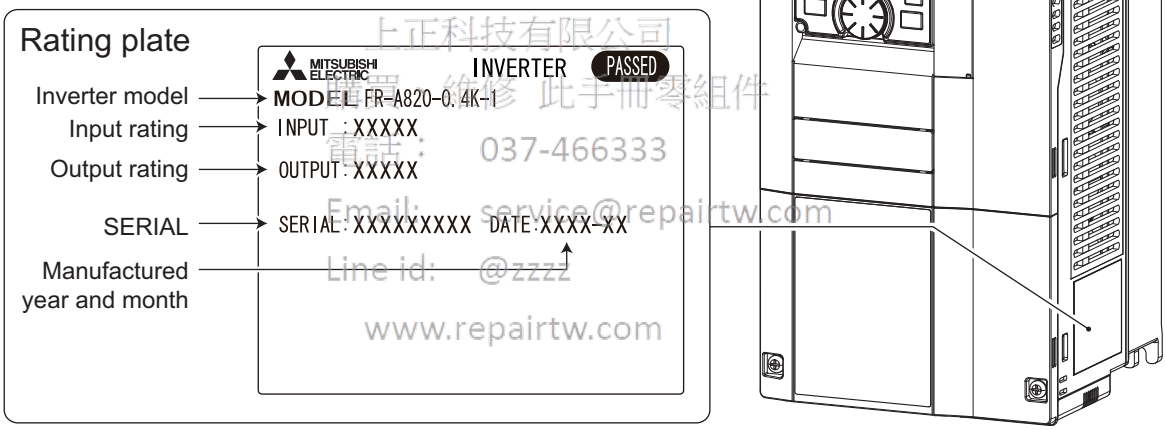

上正科技有限公司
購買 維修 此手冊零組件
電話: 037-466333
Email: service@repairtw.com
Line id: @zzz2
www.repairtw.com

*1 Specification differs by the type as follows.

Type	Motor output	Initial setting			
		Built-in EMC filter	Control logic	Rated frequency	Pr.19 Base frequency voltage
FM (terminal FM equipped model)	Terminal FM (pulse train output) Terminal AM (analog voltage output (0 to ±10 VDC))	OFF	Sink logic	60 Hz	9999 (same as the power supply voltage)
CA (terminal CA equipped model)	Terminal CA (analog current output (0 to 20 mADC)) Terminal AM (analog voltage output (0 to ±10 VDC))	ON	Source logic	50 Hz	8888 (95% of the power supply voltage)

REMARKS

- Hereinafter, the inverter model name consists of the rated current and the applicable motor capacity. (Example) FR-A820-00046(0.4K)

● Accessory

• Fan cover fixing screws

These screws are necessary for compliance with the EU Directives. **(Refer to Instruction Manual (Startup).)**

Capacity	Screw size (mm)	Quantity
FR-A820-00105(1.5K) to FR-A820-00250(3.7K) FR-A840-00083(2.2K), FR-A840-00126(3.7K)	M3 × 35	1
FR-A820-00340(5.5K) to FR-A820-00490(7.5K) FR-A840-00170(5.5K) to FR-A840-00250(7.5K)	M3 × 35	2
FR-A820-00630(11K) to FR-A820-01250(22K) FR-A840-00310(11K), FR-A840-00620(22K)	M4 × 40	2

• Eyebolt for hanging the inverter

Capacity	Eyebolt Size	Quantity
FR-A840-04320(160K) to FR-A840-06830(280K)	M12	2



● How to read the SERIAL number

Rating plate example

□	○	○	○○○○○○
Symbol	Year	Month	Control number
SERIAL			

The SERIAL consists of one symbol, two characters indicating the production year and month, and six characters indicating the control number. The last digit of the production year is indicated as the Year, and the Month is indicated by 1 to 9, X (October), Y (November), or Z (December.)

上正科技有限公司
購買、維修 此手冊零組件
電話： 037-466333
Email: service@repairtw.com
Line id: @zzzz
www.repairtw.com

1.2 Component names

Component names are shown below.

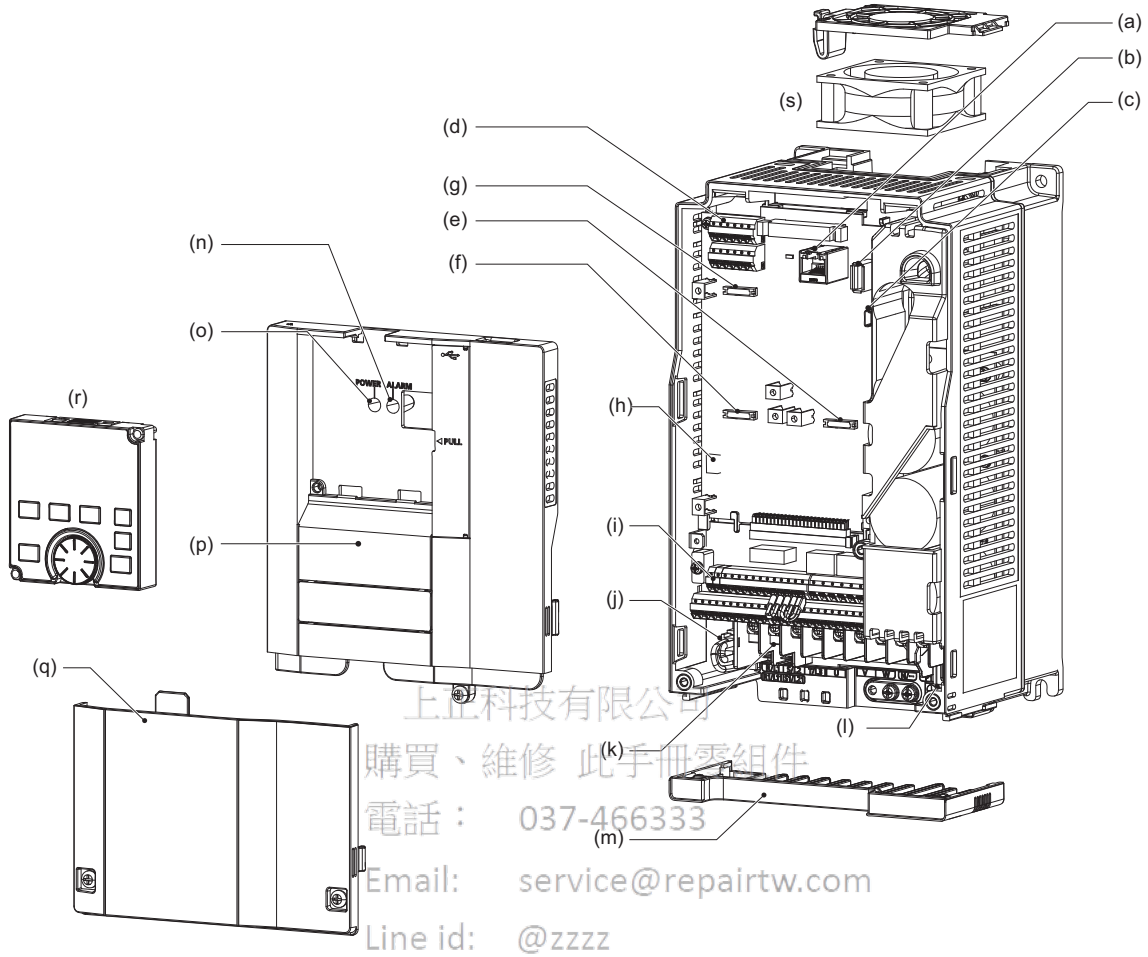

上正科技有限公司
購買、維修 此手冊零組件
電話： 037-466333
Email: service@repairtw.com
Line id: @zzzz
www.repairtw.com

Symbol	Name	Description	Refer to page
(a)	PU connector	Connects the operation panel (FR-DU08) or the parameter unit (FR-PU07). This connector also enables the RS-485 communication.	59
(b)	USB A connector	Connects a USB memory device.	60
(c)	USB mini B connector	Connects a personal computer and enables communication with FR Configurator2.	60
(d)	RS-485 terminals	Enables RS-485, Modbus-RTU communication.	61
(e)	Plug-in option connector1	Connects a plug-in option or a communication option.	Instruction Manual of the option
(f)	Plug-in option connector2		
(g)	Plug-in option connector3		
(h)	Voltage/current input switch	Selects between voltage and current for the terminal 2 and 4 inputs.	391
(i)	Control circuit terminal block	Connects cables for the control circuit.	45
(j)	EMC filter ON/OFF connector	Turns ON/OFF the EMC filter.	86
(k)	Main circuit terminal block	Connects cables for the main circuit.	37
(l)	Charge lamp	Stays ON while the power is supplied to the main circuit.	38
(m)	Combed shaped wiring cover	This cover is removable without unplugging cables. (FR-A820-01250(22K) or lower, FR-A840-00620(22K) or lower)	40
(n)	Alarm lamp	Turns ON when the protective function of the inverter is activated.	38
(o)	Power lamp	Stays ON while the power is supplied to the control circuit (R1/L11, S1/L21).	38
(p)	Front cover	Remove this cover for the installation of the product, installation of a plug-in (communication) option, RS-485 terminal wiring, switching of the voltage/ current input switch, etc.	22
(q)	Terminal block cover	Remove this cover for wiring.	22
(r)	Operation panel (FR-DU08)	Operates and monitors the inverter.	98
(s)	Cooling fan	Cools the inverter. (FR-A820-00105(1.5K) or higher, FR-A840-00083(2.2K) or higher.)	659

1.3 Operation steps

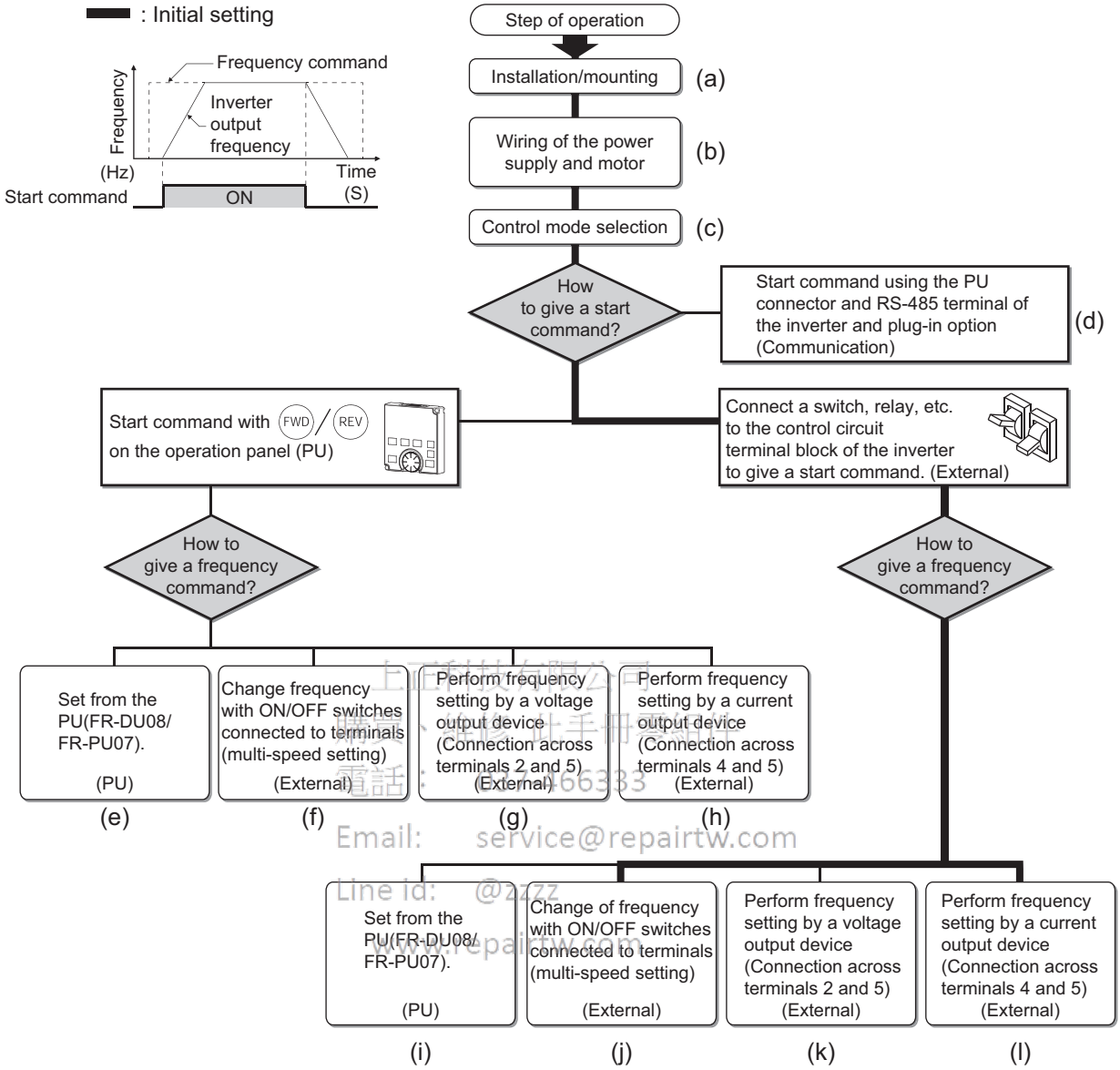

Symbol	Overview	Refer to page
(a)	Install the inverter.	26
(b)	Perform wiring for the power supply and the motor.	38
(c)	Select the control mode (V/F control, Advanced magnetic flux vector control, vector control, or PM sensorless vector control).	160
(d)	Input the start command via communication.	536
(e)	The PU gives both start and frequency commands. (PU operation mode)	106
(f)	The PU gives a start command, and inputs to terminal RH, RM, and RL give a frequency command. (External/PU combined operation mode 2)	108
(g)	The PU gives a start command, and voltage input to terminal 2 gives a frequency command. (External/PU combined operation mode 2)	109
(h)	The PU gives a start command, and current input to terminal 4 gives a frequency command. (External/PU combined operation mode 2)	110
(i)	Inputs to terminal STF and STR give a start command, and the PU gives a frequency command. (External/PU combined operation mode 1)	111
(j)	Inputs to terminal STF and STR give a start command, and inputs to terminal RH, RM, and RL give a frequency command. (External operation mode)	113
(k)	Inputs to terminal STF and STR give a start command, and voltage input to terminal 2 gives a frequency command. (External operation mode)	114
(l)	Inputs to terminal STF and STR give a start command, and current input to terminal 4 gives a frequency command. (External operation mode)	116

Email: service@repairtw.com

1.4 About the related manuals

The manuals related to FR-A800 are shown below.

Manual name	Manual number
FR-A800 Instruction Manual (Startup)	IB-0600493
FR-A806 Instruction Manual (Hardware)	IB-0600531ENG
FR-A800 PLC function programming manual	IB-0600492ENG
FR Configurator 2 Instruction Manual	IB-0600516ENG
FR-A800 Safety stop function instruction manual	BCN-A23228-001

上正科技有限公司
購買、維修 此手冊零組件
電話： 037-466333
Email: service@repairtw.com
Line id: @zzzz
www.repairtw.com

2 INSTALLATION AND WIRING

This chapter explains the "installation" and the "wiring" of this product.
Always read the instructions before using the equipment.
For "INSTALLATION AND WIRING" of the IP55 compatible model, refer to FR-A806 Instruction Manual (Hardware).

上正科技有限公司
購買、維修 此手冊零組件
電話： 037-466333
Email: service@repairtw.com
Line id: @zzzz
www.repairtw.com

2.1 Peripheral devices 18
2.2 Removal and reinstallation of the front cover 22
2.3 Installation of the inverter and enclosure design 26
2.4 Terminal connection diagrams 33
2.5 Main circuit terminals 37
2.6 Control circuit 45
2.7 Communication connectors and terminals 59
2.8 Connection of motor with encoder (vector control) 62
2.9 Connection of stand-alone option units 71

2.1 Peripheral devices

2.1.1 Inverter and peripheral devices

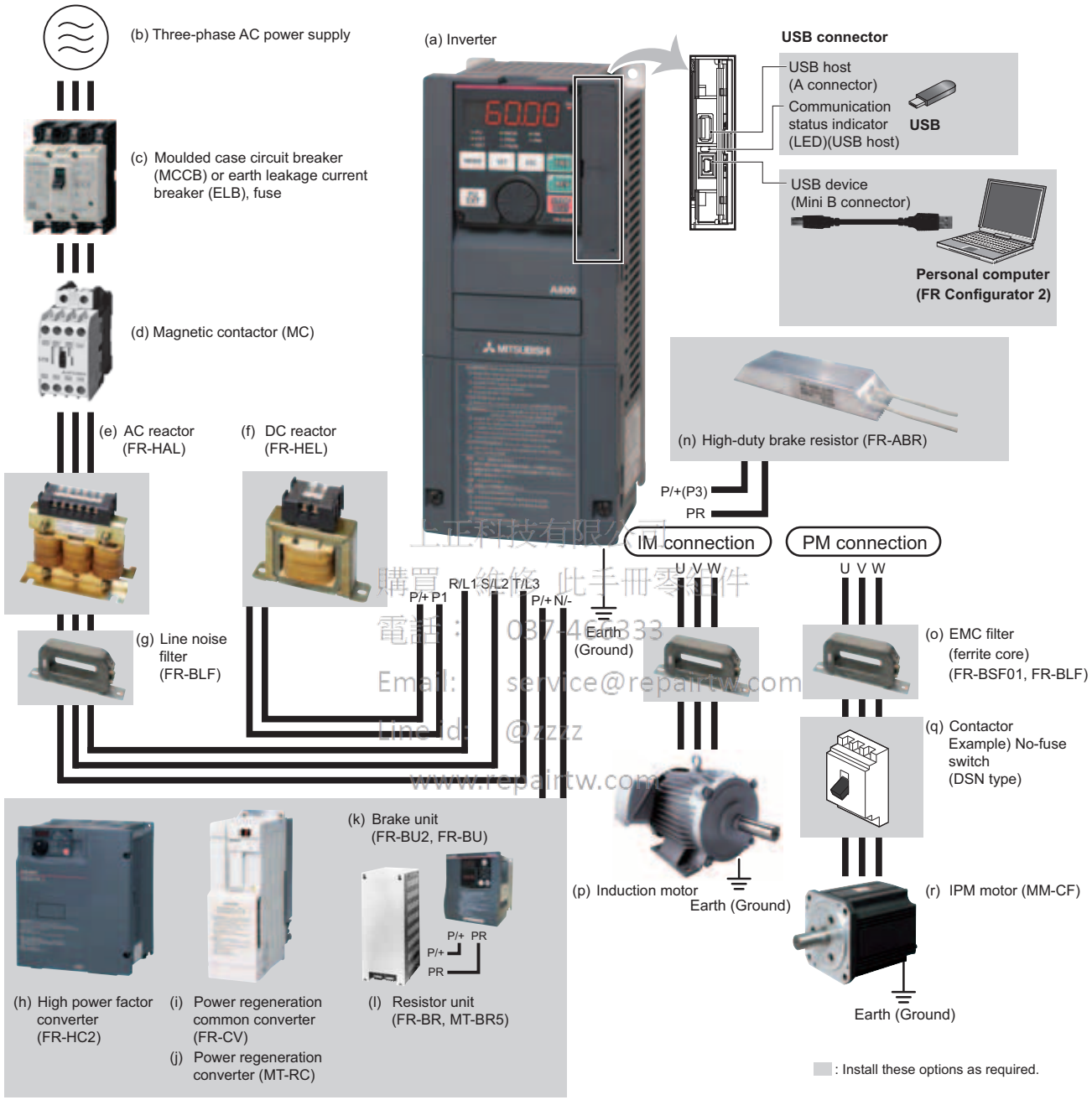

上正科技有限公司
購買、維修此手冊零組件
電話：037-462333
Email: service@repairtw.com
Line id: @zzzz
www.repairtw.com

REMARKS

- To prevent an electric shock, always earth (ground) the motor and inverter.
- Do not install a power factor correction capacitor or surge suppressor or capacitor type filter on the inverter's output side. Doing so will cause the inverter to trip or the capacitor and surge suppressor to be damaged. If any of the above devices is connected, immediately remove it. When installing a molded case circuit breaker on the output side of the inverter, contact the manufacturer of the molded case circuit breaker.
- Electromagnetic wave interference
  The input/output (main circuit) of the inverter includes high frequency components, which may interfere with the communication devices (such as AM radios) used near the inverter. In this case, activating the EMC filter may minimize interference. (Refer to page 86.)
- For details of options and peripheral devices, refer to the respective Instruction Manual.
- A PM motor cannot be driven by the commercial power supply.
- A PM motor is a motor with permanent magnets embedded inside. High voltage is generated at the motor terminals while the motor is running. Before closing the contactor at the output side, make sure that the inverter power is ON and the motor is stopped.

Symbol	Name	Overview	Refer to page
(a)	Inverter (FR-A800)	The life of the inverter is influenced by the surrounding air temperature. The surrounding air temperature should be as low as possible within the permissible range. This must be noted especially when the inverter is installed in an enclosure. Incorrect wiring may lead to damage of the inverter. The control signal lines must be kept fully away from the main circuit lines to protect them from noise. The built-in EMC filter can reduce the noise.	26 33 86
(b)	Three-phase AC power supply	Must be within the permissible power supply specifications of the inverter.	670
(c)	Molded case circuit breaker (MCCB), earth leakage circuit breaker (ELB), or fuse	Must be selected carefully since an inrush current flows in the inverter at power ON.	20
(d)	Magnetic contactor (MC)	Install this to ensure safety. Do not use this to start and stop the inverter. Doing so will shorten the life of the inverter.	91
(e)	AC reactor (FR-HAL)	Install this to suppress harmonics and to improve the power factor. An AC reactor (FR-HAL) (option) is required when installing the inverter near a large power supply system (1000 kVA or more). Under such condition, the inverter may be damaged if you do not use a reactor. Select a reactor according to the applied motor capacity.	90
(f)	DC reactor (FR-HEL)	Install this to suppress harmonics and to improve the power factor. Select a reactor according to the applicable motor capacity. For the FR-A820-03800(75K) or higher, FR-A840-02160(75K) or higher, or a motor with 75 kW or higher, always connect FR-HEL. When using the DC reactor with the FR-A820-03160(55K) or lower, FR-A840-01800(55K) or lower, remove the jumper across terminals P/+ and P1 before connecting the DC reactor to the inverter.	90
(g)	Noise filter (FR-BLF)	The FR-A820-03160(55K) or lower, FR-A840-01800(55K) or lower are equipped with the common mode choke.	84
(h)	High power factor converter (FR-HC2)	Suppresses the power supply harmonics significantly. Install this as required.	76
(i)	Power regeneration common converter (FR-CV*1)	Provides a large braking capability. Install this as required.	77
(j)	Power regeneration converter (MT-RC*2)		78
(k)	Brake unit (FR-BU2, FR-BU*1)	Allows the inverter to provide the optimal regenerative braking capability. Install this as required.	73
(l)	Resistor unit (FR-BR*1, MT-BR5*2)		
(m)	USB connection	A USB (Ver. 1.1) cable connects the inverter with a personal computer. A USB memory device enables parameter copies and the trace function.	60
(n)	High-duty brake resistor (FR-ABR*3)	Improves the braking capability of the inverter built-in brake. Remove the jumper across the terminals PR and PX to connect this. (7.5K or lower) Always install a thermal relay when using a brake resistor whose capacity is 11K or higher.	71
(o)	Noise filter (FR-BSF01, FR-BLF)	Install this to reduce the electromagnetic noise generated from the inverter. The noise filter is effective in the range from about 0.5 MHz to 5 MHz. A wire should be wound four turns at maximum.	84
(p)	Induction motor	Connect a squirrel-cage induction motor.	—
(q)	Contactor Example) No-fuse switch (DSN type)	Connect this for an application where a PM motor is driven by the load even while the inverter power is OFF. Do not open or close the contactor while the inverter is running (outputting).	—
(r)	IPM motor (MM-CF)	Use the specified motor. An IPM motor cannot be driven by the commercial power supply. When using a PM motor other than MM-CF, contact your sales representative.	674

*1 Compatible with the FR-A820-03160(55K) or lower and FR-A840-01800(55K) or lower.
*2 Compatible with the FR-A820-03800(75K) or higher and FR-A840-02160(75K) or higher.
*3 Compatible with the FR-A820-01250(22K) or lower and FR-A840-00620(22K) or lower.

上正科技有限公司
購買、維修 此手冊零組件
電話： 037-466333
Email: service@repairtw.com
Line id: @zzzz
www.repairtw.com

2.1.2 Peripheral devices

Check the model of the inverter you purchased. Appropriate peripheral devices must be selected according to the capacity. Refer to the table below to prepare appropriate peripheral devices.

200 V class

Motor output (kW) *1	Applicable inverter model	Molded case circuit breaker (MCCB) *2 or earth leakage circuit breaker (ELB) (NF, NV type)		Input-side magnetic contactor *3	
		Power factor improving (AC or DC) reactor		Power factor improving (AC or DC) reactor	
		Without	With	Without	With
0.4	FR-A820-00046(0.4K)	5A	5A	S-N10	S-N10
0.75	FR-A820-00077(0.75K)	10A	10A	S-N10	S-N10
1.5	FR-A820-00105(1.5K)	15A	15A	S-N10	S-N10
2.2	FR-A820-00167(2.2K)	20A	15A	S-N10	S-N10
3.7	FR-A820-00250(3.7K)	30A	30A	S-N20, N21	S-N10
5.5	FR-A820-00340(5.5K)	50A	40A	S-N25	S-N20, N21
7.5	FR-A820-00490(7.5K)	60A	50A	S-N25	S-N25
11	FR-A820-00630(11K)	75A	75A	S-N35	S-N35
15	FR-A820-00770(15K)	125A	100A	S-N50	S-N50
18.5	FR-A820-00930(18.5K)	150A	125A	S-N65	S-N50
22	FR-A820-01250(22K)	175A	150A	S-N80	S-N65
30	FR-A820-01540(30K)	225A	175A	S-N95	S-N80
37	FR-A820-01870(37K)	250A	225A	S-N150	S-N125
45	FR-A820-02330(45K)	300A	300A	S-N180	S-N150
55	FR-A820-03160(55K)	400A	350A	S-N220	S-N180
75	FR-A820-03800(75K)	—	400A	—	S-N300
90	FR-A820-04750(90K)	—	400A	—	S-N300

上正科技有限公司
購買、維修、手冊零組件
電話： 037-466333
Email: service@repairtw.com
Line id: @zzzz
www.repairtw.com

*1 Assumes the use of an IPM motor MM-CF or a Mitsubishi 4-pole standard motor with the power supply voltage of 200 VAC 50 Hz.

*2 Select an MCCB according to the power supply capacity.
Install one MCCB per inverter.
For the use in the United States or Canada, provide the appropriate UL and cUL listed fuse or UL489 molded case circuit breaker (MCCB) that is suitable for branch circuit protection. (Refer to **the Instruction Manual (Startup)**.)

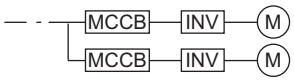

*3 The magnetic contactor is selected based on the AC-1 class. The electrical durability of magnetic contactor is 500,000 times. When the magnetic contactor is used for emergency stops during motor driving, the electrical durability is 25 times.
If using an MC for emergency stop during motor driving, select an MC regarding the inverter input side current as JEM1038-AC-3 class rated current. When using an MC on the inverter output side for commercial-power supply operation switching using a general-purpose motor, select an MC regarding the rated motor current as JEM1038-AC-3 class rated current.

REMARKS

- When the inverter capacity is larger than the motor capacity, select an MCCB and a magnetic contactor according to the inverter model, and select cables and reactors according to the motor output.
- When the breaker on the inverter's input side trips, check for the wiring fault (short circuit), damage to internal parts of the inverter etc. The cause of the trip must be identified and removed before turning ON the power of the breaker.

400 V class

Motor output (kW) *1	Applicable inverter model	Molded case circuit breaker (MCCB) *2 or earth leakage circuit breaker (ELB) (NF, NV type)		Input-side magnetic contactor *3	
		Power factor improving (AC or DC) reactor		Power factor improving (AC or DC) reactor	
		Without	With	Without	With
0.4	FR-A840-00023(0.4K)	5A	5A	S-N10	S-N10
0.75	FR-A840-00038(0.75K)	5A	5A	S-N10	S-N10
1.5	FR-A840-00052(1.5K)	10A	10A	S-N10	S-N10
2.2	FR-A840-00083(2.2K)	10A	10A	S-N10	S-N10
3.7	FR-A840-00126(3.7K)	20A	15A	S-N10	S-N10
5.5	FR-A840-00170(5.5K)	30A	20A	S-N20, N21	S-N11, N12
7.5	FR-A840-00250(7.5K)	30A	30A	S-N20, N21	S-N20, N21
11	FR-A840-00310(11K)	50A	40A	S-N20, N21	S-N20, N21
15	FR-A840-00380(15K)	60A	50A	S-N25	S-N20, N21
18.5	FR-A840-00470(18.5K)	75A	60A	S-N25	S-N25
22	FR-A840-00620(22K)	100A	75A	S-N35	S-N25
30	FR-A840-00770(30K)	125A	100A	S-N50	S-N50
37	FR-A840-00930(37K)	150A	125A	S-N65	S-N50
45	FR-A840-01160(45K)	175A	150A	S-N80	S-N65
55	FR-A840-01800(55K)	200A	175A	S-N80	S-N80
75	FR-A840-02160(75K)	—	225A	—	S-N95
90	FR-A840-02600(90K)	—	225A	—	S-N150
110	FR-A840-03250(110K)	—	225A	—	S-N180
132	FR-A840-03610(132K)	—	400A	—	S-N220
150	FR-A840-04320(160K)	—	400A	—	S-N300
160	FR-A840-04320(160K)	—	400A	—	S-N300
185	FR-A840-04810(185K)	—	400A	—	S-N300
220	FR-A840-05470(220K)	—	500A	—	S-N400
250	FR-A840-06100(250K)	—	600A	—	S-N600
280	FR-A840-06830(280K)	—	600A	—	S-N600

上正科技有限公司
購買、維修、備件、零組件
電話： 037-406333
Email: service@repairtw.com
Line id: @zzzz
www.repairtw.com

*1 Assumes the use of an IPM motor MM-CF or a Mitsubishi 4-pole standard motor with the power supply voltage of 400 VAC 50 Hz.

*2 Select an MCCB according to the power supply capacity.
Install one MCCB per inverter.
For the use in the United States or Canada, provide the appropriate UL and cUL listed fuse or UL489 molded case circuit breaker (MCCB) that is suitable for branch circuit protection. (Refer to **the Instruction Manual (Startup)**.)

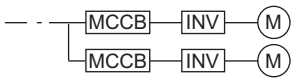

*3 Magnetic contactor is selected based on the AC-1 class. The electrical durability of magnetic contactor is 500,000 times. When the magnetic contactor is used for emergency stops during motor driving, the electrical durability is 25 times.
If using an MC for emergency stop during motor driving, select an MC regarding the inverter input side current as JEM1038-AC-3 class rated current. When using an MC on the inverter output side for commercial-power supply operation switching using a general-purpose motor, select an MC regarding the rated motor current as JEM1038-AC-3 class rated current.

REMARKS

- When the inverter capacity is larger than the motor capacity, select an MCCB and a magnetic contactor according to the inverter model, and select cables and reactors according to the motor output.
- When the breaker on the inverter's input side trips, check for the wiring fault (short circuit), damage to internal parts of the inverter etc. The cause of the trip must be identified and removed before turning ON the power of the breaker..

2.2 Removal and reinstallation of the front cover

●Removal and reinstallation of the operation panel

(1) Loosen the two screws on the operation panel. (These screws cannot be removed.)

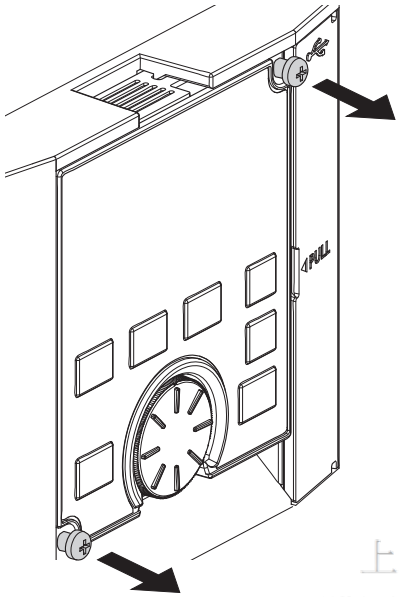

(2) Press the upper edge of the operation panel while pulling out the operation panel.

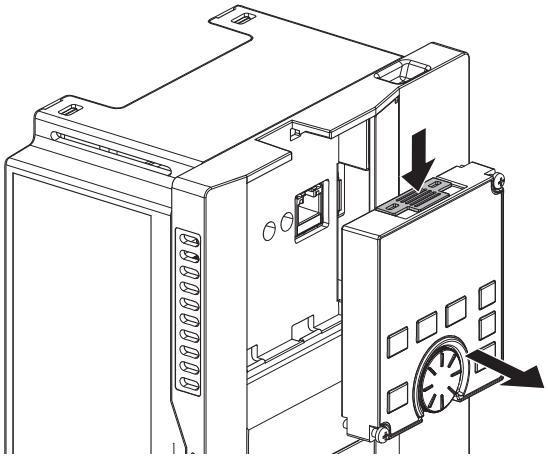

上正科技有限公司
購買、維修、此手冊零組件
電話： 037-466333
Email: service@repairtw.com
Line id: @zzzz
www.repairtw.com

To reinstall the operation panel, align its connector on the back with the PU connector of the inverter, and insert the operation panel. After confirming that the operation panel is fit securely, tighten the screws. (Tightening torque: 0.40 to 0.45 N·m)

●Removal of the terminal block cover (FR-A820-01540(30K) or lower, FR-A840-00770(30K) or lower)

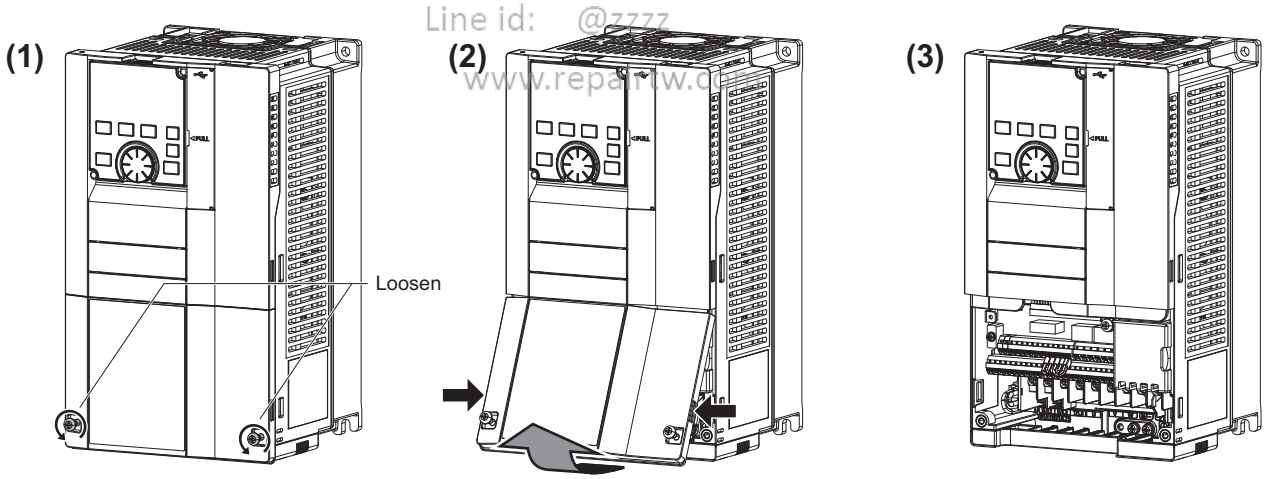

(1) Loosen the screws on the terminal block cover. (These screws cannot be removed.)
(2) While holding the areas around the installation hooks on the sides of the terminal block cover, pull out the terminal block cover using its upper side as a support.
(3) With the terminal block cover removed, wiring of the main circuit terminals and control circuit terminals can be performed.

●Removal of the front cover (FR-A820-01540(30K) or lower, FR-A840-00770(30K) or lower)

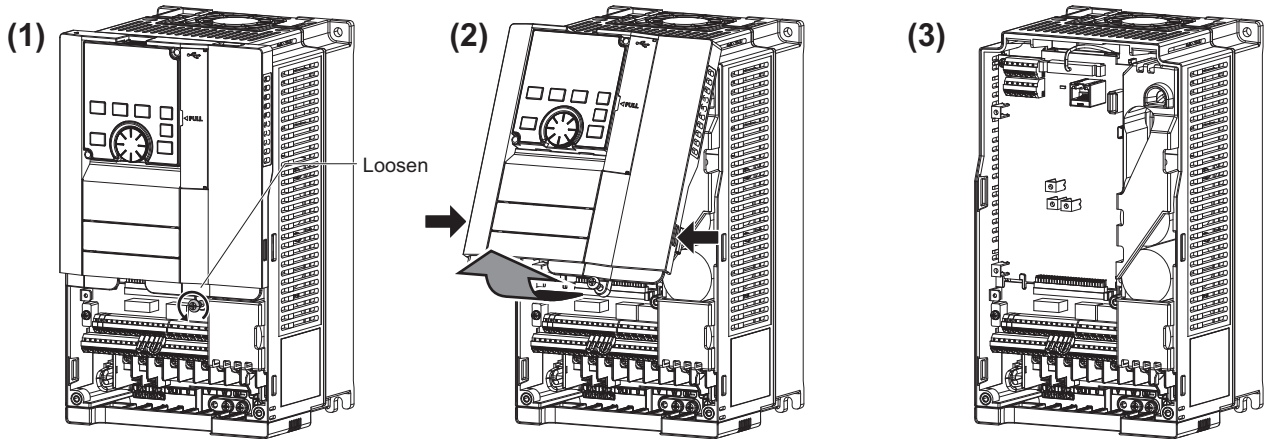

(1) With the terminal block cover removed, loosen the mounting screw(s) on the front cover.(The screw(s) cannot be removed.)
(FR-A820-00340(5.5K) to FR-A820-01540(30K) and FR-A840-00170(5.5K) to FR-A840-00770(30K) have two mounting screws.)

(2) While holding the areas around the installation hooks on the sides of the front cover, pull out the cover using its upper side as a support.

(3) With the front cover removed, wiring of the RS-485 terminals and installation of the plug-in option can be performed.

●Reinstallation of the front cover and the terminal block cover (FR-A820-01540(30K) or lower, FR-A840-00770(30K) or lower)

上正科技有限公司
購買、維修 此手冊零組件
電話： 037-466332
www.repairtw.com

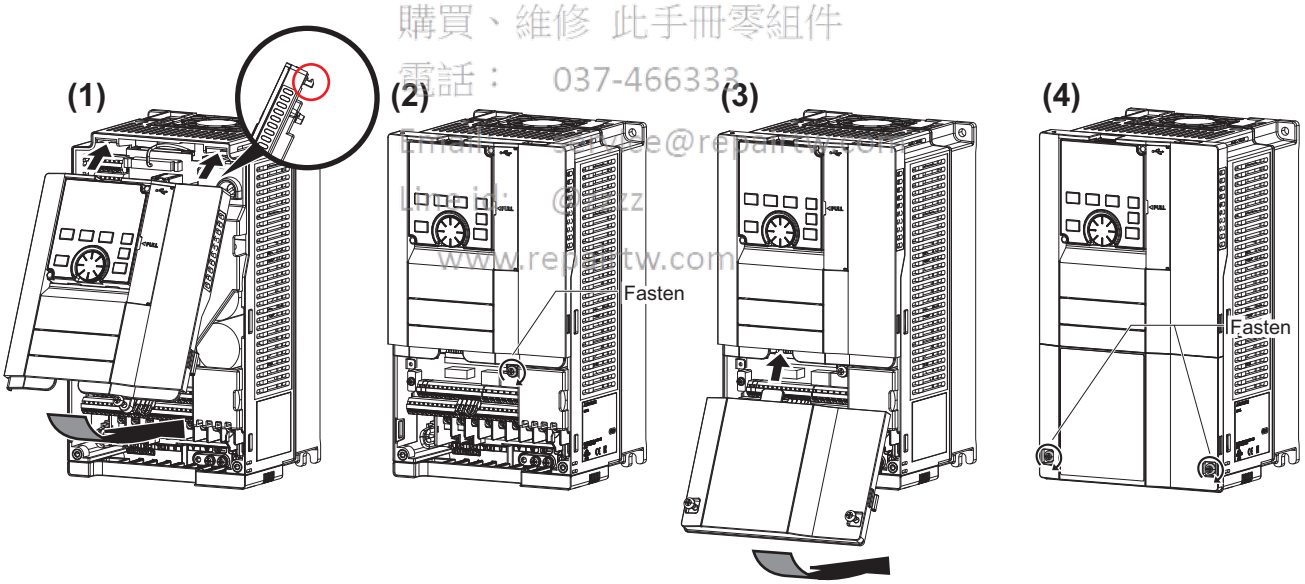

(1) Insert the upper hooks of the front cover into the sockets of the inverter.
Securely install the front cover to the inverter by fixing the hooks on the sides of the cover into place.

(2) Tighten the mounting screw(s) at the lower part of the front cover.
(FR-A820-00340(5.5K) to FR-A820-01540(30K) and FR-A840-00170(5.5K) to FR-A840-00770(30K) have two mounting screws.)

(3) Install the terminal block cover by inserting the upper hook into the socket of the front cover.

(4) Tighten the mounting screws at the lower part of the terminal block cover.

REMARKS

- When installing the front cover, fit the connector of the operation panel securely along the guides of the PU connector.

Removal and reinstallation of the front cover

●Removal of the terminal block cover (FR-A820-01870(37K) or higher, FR-A840-00930(37K) or higher)

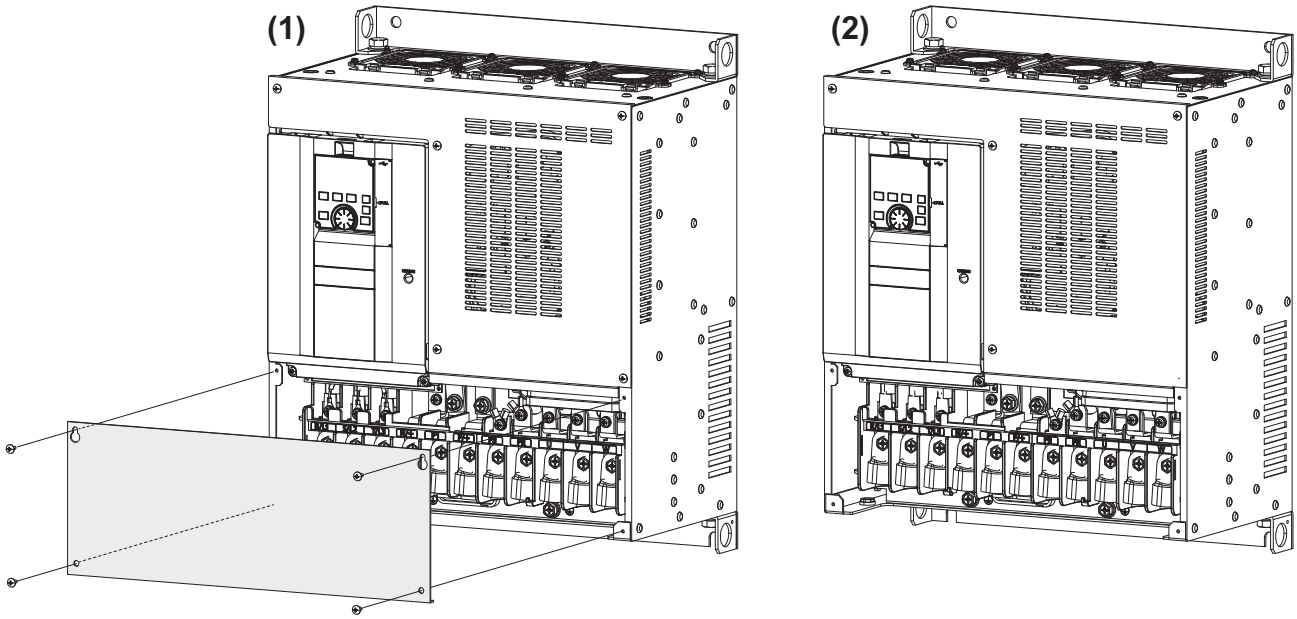

(1) When the mounting screws are removed, the terminal block cover can be removed.

(2) With the terminal block cover removed, wiring of the main circuit terminals can be performed.

●Removal of the front cover (FR-A820-01870(37K) or higher, FR-A840-00930(37K) or higher)

上正科技有限公司
購買、維修 此手冊零組件
電話： 037-466333
Email: service@repairw.com
Line id: @zz
www.repairw.com

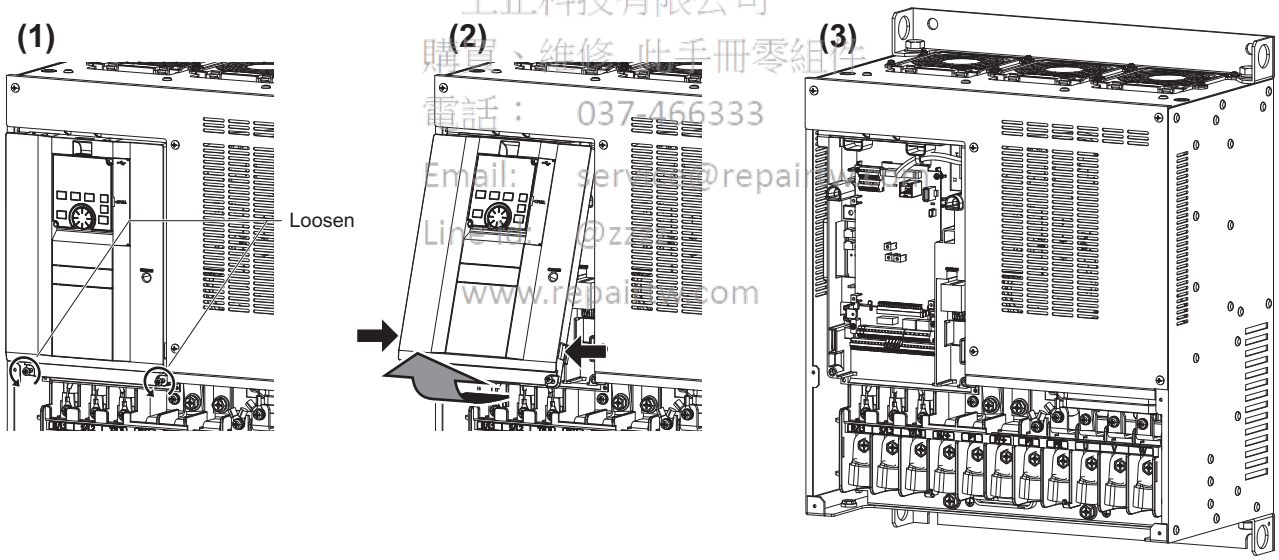

(1) With the terminal block cover removed, loosen the mounting screws on the front cover. (These screws cannot be removed.)

(2) Holding the areas around the installation hooks on the sides of the front cover, pull out the cover using its upper side as a support.

(3) With the front cover removed, wiring of the RS-485 terminals and installation of the plug-in option can be performed.

●**Reinstallation of the front cover and the terminal block cover (FR-A820-01870(37K) or higher, FR-A840-00930(37K) or higher)**

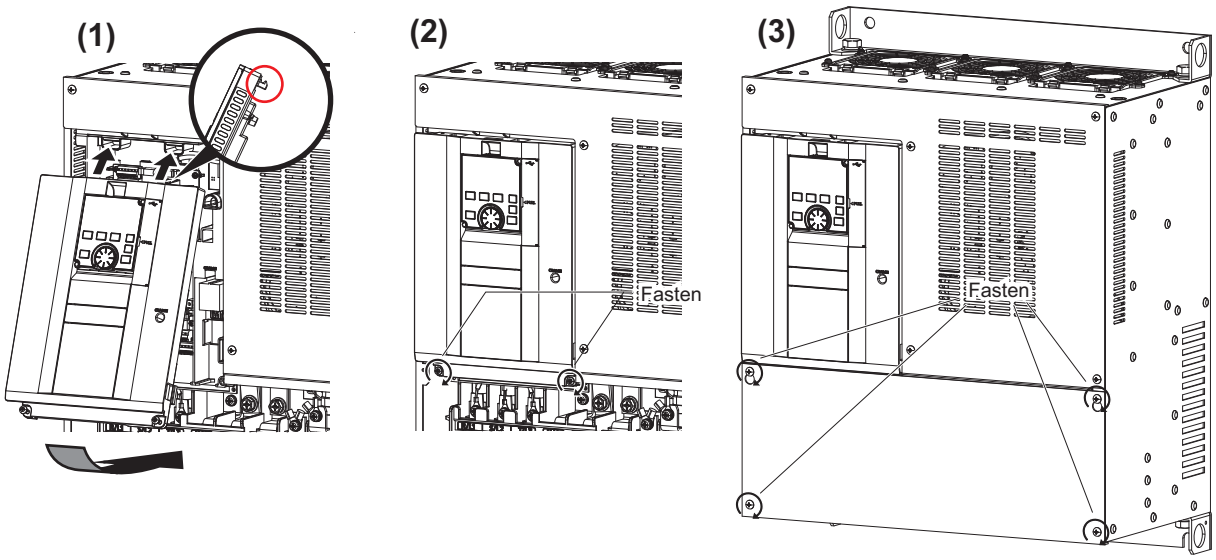

(1) Insert the upper hooks of the front cover into the sockets of the inverter.
Securely install the front cover to the inverter by fixing the hooks on the sides of the cover into place.

(2) Tighten the mounting screw(s) at the lower part of the front cover.

(3) Fasten the terminal block cover with the mounting screws.

REMARKS

- Fully make sure that the front cover, and the terminal block cover are installed securely. Always tighten the mounting screws of the front cover, the terminal block cover.
- The same serial number is printed on the capacity plate of the front cover and the rating plate of the inverter. Before reinstalling each cover, check the serial numbers to ensure that the cover removed is reinstalled to the inverter from where it was removed.

上正科技有限公司
購買、維修 此手冊零組件
電話：037-466333
Email: service@repairtw.com
Line id: @zzzz
www.repairtw.com

2.3 Installation of the inverter and enclosure design

When designing or manufacturing an inverter enclosure, determine the structure, size, and device layout of the enclosure by fully considering the conditions such as heat generation of the contained devices and the operating environment. An inverter unit uses many semiconductor devices. To ensure higher reliability and long period of operation, operate the inverter in the ambient environment that completely satisfies the equipment specifications.

2.3.1 Inverter installation environment

The following table lists the standard specifications of the inverter installation environment. Using the inverter in an environment that does not satisfy the conditions deteriorates the performance, shortens the life, and causes a failure. Refer to the following points, and take adequate measures.

(1) Standard environmental specifications of the inverter

Item		Description	
Surrounding air temperature	LD, ND (initial setting), HD	-10 to +50°C (non-freezing)	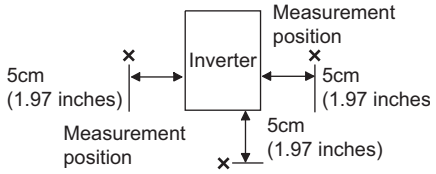
	SLD	-10 to +40°C (non-freezing)	
Ambient humidity		With circuit board coating: 95% RH or less (non-condensing), Without circuit board coating: 90% RH or less (non-condensing)	
Storage temperature		-20 to +65°C*1	
Atmosphere		Indoors (free from corrosive gas, flammable gas, oil mist, dust and dirt)	
Altitude		Maximum 1,000 m above sea level.*2	
Vibration		5.9 m/s^2 or less*3 at 10 to 55 Hz (directions of X, Y, Z axes)	

上正科技有限公司
購買、維修 此手冊零組件
電話： 037 466333
Email: service@repairtw.com
line id: @zzzz
www.repairtw.com

*1 Temperature applicable for a short time, e.g. in transit.

*2 For the installation at an altitude above 1,000 m (3280.80 feet) up to 2,500 m (8202 feet), derate the rated current 3% per 500 m (1640.40 feet).

*3 2.9 m/s^2 or less for the FR-A840-04320(160K) or higher.

(2) Temperature

The permissible surrounding air temperature of the inverter is between -10°C and +50°C (-10°C and +40°C at the SLD rating). Always operate the inverter within this temperature range. Operation outside this range will considerably shorten the service lives of the semiconductors, parts, capacitors and others. Take the following measures to keep the surrounding air temperature of the inverter within the specified range.

(a) Measures against high temperature

- Use a forced ventilation system or similar cooling system. (Refer to page 28.)
- Install the enclosure in an air-conditioned electric chamber.
- Block direct sunlight.
- Provide a shield or similar plate to avoid direct exposure to the radiated heat and wind of a heat source.
- Ventilate the area around the enclosure well.

(b) Measures against low temperature

- Provide a space heater in the enclosure.
- Do not power OFF the inverter. (Keep the start signal of the inverter OFF.)

(c) Sudden temperature changes

- Select an installation place where temperature does not change suddenly.
- Avoid installing the inverter near the air outlet of an air conditioner.
- If temperature changes are caused by opening/closing of a door, install the inverter away from the door.

(3) Humidity

Operate the inverter within the ambient air humidity of usually 45 to 90% (up to 95% with circuit board coating). Too high humidity will pose problems of reduced insulation and metal corrosion. On the other hand, too low humidity may cause a spatial electrical breakdown.
The insulation distance defined in JEM1103 "Control Equipment Insulator" is humidity of 45 to 85%.

(a) Measures against high humidity

- Make the enclosure enclosed, and provide it with a hygroscopic agent.
- Provide dry air into the enclosure from outside.
- Provide a space heater in the enclosure.

(b) Measures against low humidity

Air with proper humidity can be blown into the enclosure from outside. Also when installing or inspecting the unit, discharge your body (static electricity) beforehand, and keep your body away from the parts and patterns.

(c) Measures against condensation

Condensation may occur if frequent operation stops change the in-enclosure temperature suddenly or if the outside air temperature changes suddenly.
Condensation causes such faults as reduced insulation and corrosion.

- Take the measures against high humidity in (a).
- Do not power OFF the inverter. (Keep the start signal of the inverter OFF.)

(4) Dust, dirt, oil mist

Dust and dirt will cause such faults as poor contacts, reduced insulation and cooling effect due to the moisture-absorbed accumulated dust and dirt, and in-enclosure temperature rise due to a clogged filter. In an atmosphere where conductive powder floats, dust and dirt will cause such faults as malfunction, deteriorated insulation and short circuit in a short time.
Since oil mist will cause similar conditions, it is necessary to take adequate measures.

上正科技有限公司
購買、維修 此手冊零組件
電話： 027-466333
Email: service@repairtw.com
Line id: @zzzz
www.repairtw.com

Countermeasure

- Place the inverter in a totally enclosed enclosure.
  Take measures if the in-enclosure temperature rises. (Refer to page 28.)
- Purge air.
  Pump clean air from outside to make the in-enclosure air pressure higher than the outside air pressure.

(5) Corrosive gas, salt damage

If the inverter is exposed to corrosive gas or to salt near a beach, the printed board patterns and parts will corrode or the relays and switches will result in poor contact.
In such places, take the measures given in (4).

(6) Explosive, flammable gases

As the inverter is non-explosion proof, it must be contained in an explosion-proof enclosure. In places where explosion may be caused by explosive gas, dust or dirt, an enclosure cannot be used unless it structurally complies with the guidelines and has passed the specified tests. This makes the enclosure itself expensive (including the test charges). The best way is to avoid installation in such places and install the inverter in a non-hazardous place.

(7) High altitude

Use the inverter at an altitude of within 1000 m. For the installation at an altitude above 1,000 m (3280.80 feet) up to 2,500 m (8202 feet), derate the rated current 3% per 500 m (1640.40 feet).
If it is used at a higher place, it is likely that thin air will reduce the cooling effect and low air pressure will deteriorate dielectric strength.

(8) Vibration, impact

The vibration resistance of the inverter is up to 5.9 m/s^2 (2.9 m/s^2 or less for the FR-A840-04320(160K) or higher) at 10 to 55 Hz frequency and 1 mm amplitude for the directions of X, Y, Z axes. Applying vibration and impacts for a long time may loosen the structures and cause poor contacts of connectors, even if those vibration and impacts are within the specified values.
Especially when impacts are applied repeatedly, caution must be taken because such impacts may break the installation feet.

Countermeasure

- Provide the enclosure with rubber vibration isolators.
- Strengthen the structure to prevent the enclosure from resonance.
- Install the enclosure away from the sources of the vibration.

2.3.2 Cooling system types for inverter enclosure

From the enclosure that contains the inverter, the heat of the inverter and other equipment (transformers, lamps, resistors, etc.) and the incoming heat such as direct sunlight must be dissipated to keep the in-enclosure temperature lower than the permissible temperatures of the in-enclosure equipment including the inverter.

The cooling systems are classified as follows in terms of the cooling calculation method.

(a) Cooling by natural heat dissipation from the enclosure surface (totally enclosed type)

(b) Cooling by heatsink (aluminum fin, etc.)

(c) Cooling by ventilation (forced ventilation type, pipe ventilation type)

(d) Cooling by heat exchanger or cooler (heat pipe, cooler, etc.)

Cooling system		Enclosure structure	Comment
Natural cooling	Natural ventilation (enclosed, open type)	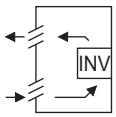	This system is low in cost and generally used, but the enclosure size increases as the inverter capacity increases. This system is for relatively small capacities.
	Natural ventilation (totally enclosed type)	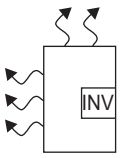	Being a totally enclosed type, this system is the most appropriate for hostile environment having dust, dirt, oil mist, etc. The enclosure size increases depending on the inverter capacity.
Forced cooling	Heatsink cooling	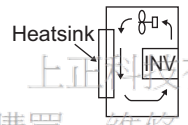	This system has restrictions on the heatsink mounting position and area. This system is for relatively small capacities.
	Forced ventilation	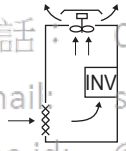	This system is for general indoor installation. This is appropriate for enclosure downsizing and cost reduction, and often used.
	Heat pipe	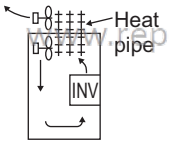	This is a totally enclosed for enclosure downsizing.

上正科技有限公司
購買、維修 此手冊零組件
電話：037-466
Email: service@repairtw.com
Line id: @zzzz
www.repairtw.com

2.3.3 Inverter installation

(1) Inverter placement

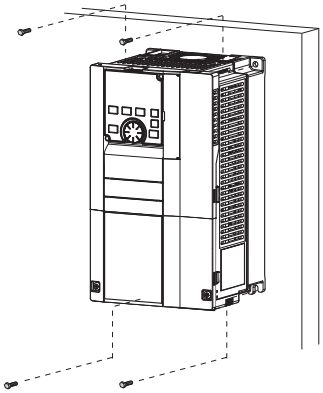

Fix six positions for the FR-A840-043

- Install the inverter on a strong surface securely with screws.
- Leave enough clearances and take cooling measures.
- Avoid places where the inverter is subjected to direct sunlight, high temperature and high humidity.
- Install the inverter on a nonflammable wall surface.
- When encasing multiple inverters, install them in parallel as a cooling measure.
- For heat dissipation and maintenance, keep clearance between the inverter and the other devices or enclosure surface. The clearance below the inverter is required as a wiring space, and the clearance above the inverter is required as a heat dissipation space.

昆此科技有限公司
購買、維修 此手冊零組件
電話： 037-486533
Email: service@repairtw.com
Line id: @昆此
www.repairtw.com

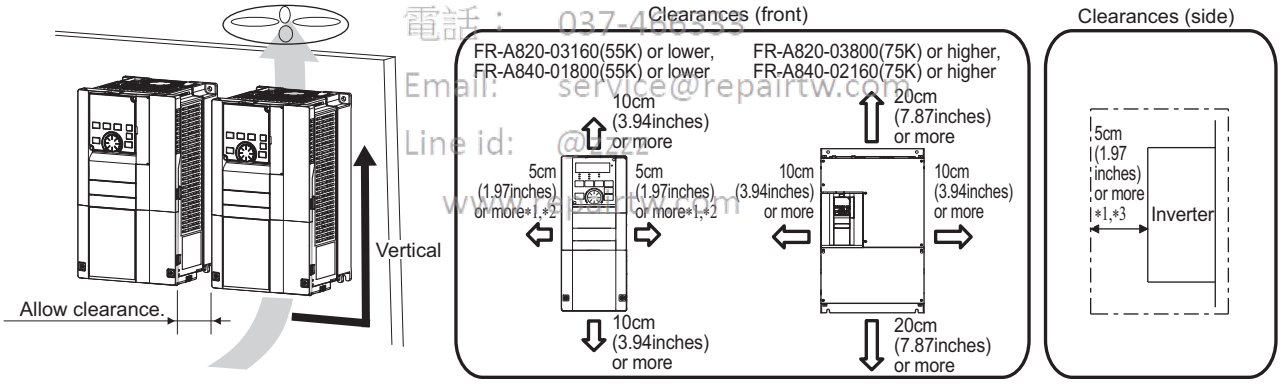

*1 For the FR-A820-00250(3.7K) or lower and FR-A840-00126(3.7K) or lower, allow 1 cm (0.39 inches) or more clearance.

*2 When using the FR-A820-01250(22K) or lower and FR-A840-00620(22K) or lower at the surrounding air temperature of 40°C (104°F) or less (30°C (86°F) or less for the SLD rated inverter), side-by-side installation (0 cm clearance) is available.

*3 For replacing the cooling fan of the FR-A840-04320(160K) or higher, 30 cm (11.81 inches) of space is necessary in front of the inverter. Refer to page 659 for fan replacement.

(2) Installation orientation of the inverter

Install the inverter on a wall as specified. Do not mount it horizontally or in any other way.

(3) Above the inverter

Heat is blown up from inside the inverter by the small fan built in the unit. Any equipment placed above the inverter should be heat resistant.

(4) Arrangement of multiple inverters

When multiple inverters are placed in the same enclosure, generally arrange them horizontally as shown in the right figure (a). When it is inevitable to arrange them vertically to minimize space, take such measures as to provide guides since heat from the bottom inverters can increase the temperatures in the top inverters, causing inverter failures.

When mounting multiple inverters, fully take caution not to make the surrounding air temperature of the inverter higher than the permissible value by providing ventilation and increasing the enclosure size.

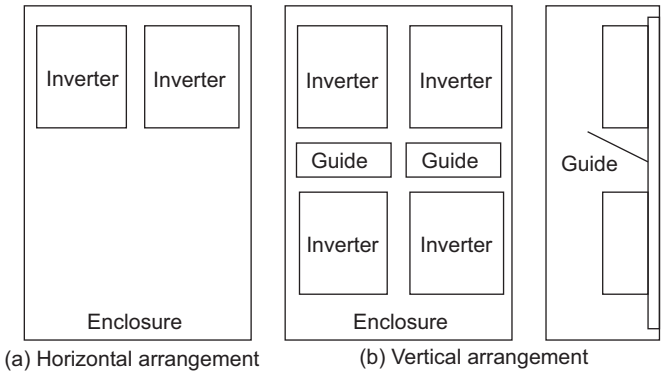

(a) Horizontal arrangement (b) Vertical arrangement

Arrangement of multiple inverters

(5) Arrangement of the ventilation fan and inverter

Heat generated in the inverter is blown up from the bottom of the unit as warm air by the cooling fan. When installing a ventilation fan for that heat, determine the place of ventilation fan installation after fully considering an air flow. (Air passes through areas of low resistance. Make an airway and airflow plates to expose the inverter to cool air.)

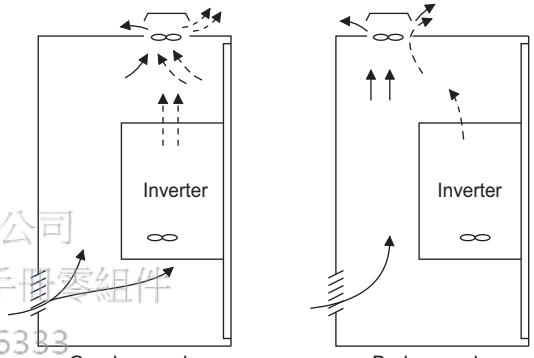

Arrangement of the ventilation fan and inverter

上正科技有限公司
購買、維修 此手冊零組件
電話： 037-466333
Email: service@repairtw.com
Line id: @zzzz
www.repairtw.com

2.3.4 Heatsink protrusion attachment procedure

When encasing FR-A840-04320(160K) or higher to an enclosure, the heat generated in the enclosure can be greatly reduced by protruding the heatsink of the inverter.
When installing the inverter in a compact enclosure, etc., this installation method is recommended.

(1) Panel cutting

Cut the panel of the enclosure according to the inverter capacity.

FR-A840-04320(160K)
FR-A840-04810(185K)

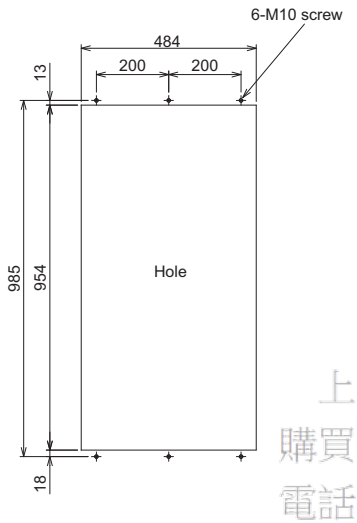

Unit: mm

FR-A840-05470(220K)
FR-A840-06100(250K)
FR-A840-06830(280K)

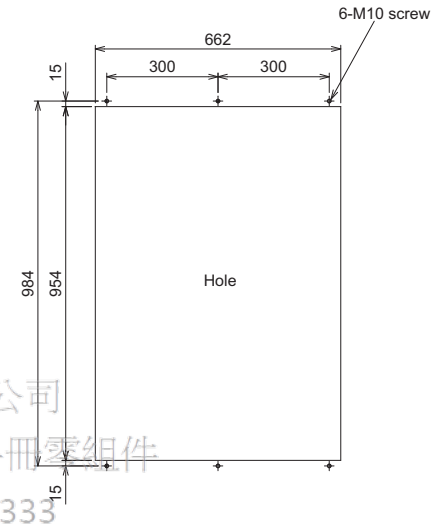

Unit: mm

上正科技有限公司
購買、維修 此手冊零組件
電話： 037-466333
Email: service@repairtw.com
Line id: @zzzz
www.repairtw.com

(2) Shift and removal of a rear side installation frame

One installation frame is attached to each of the upper and lower parts of the inverter. Change the position of the rear side installation frame on the upper and lower sides of the inverter to the front side as shown on the right. When changing the installation frames, make sure that the installation orientation is correct.

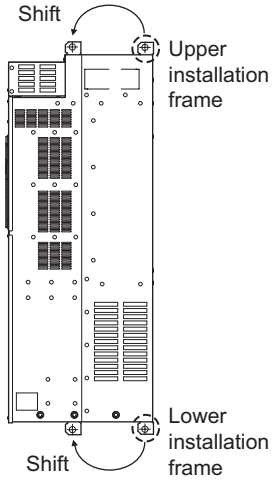

(3) Installation of the inverter

Push the inverter heatsink portion outside the enclosure and fix the enclosure and inverter with upper and lower installation frame.

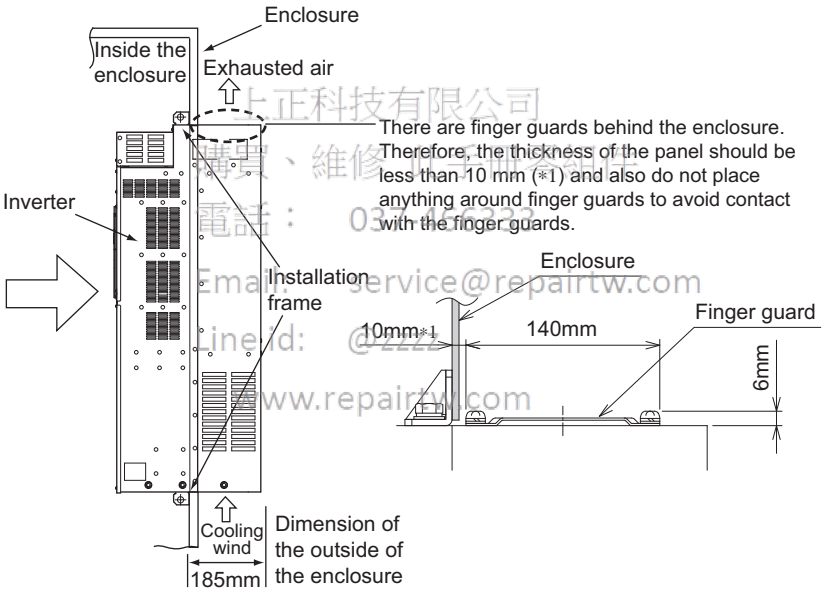

CAUTION

- Having a cooling fan, the cooling section which comes out of the enclosure cannot be used in the environment of water drops, oil, mist, dust, etc.
- Be careful not to drop screws, dust etc. into the inverter and cooling fan section.

2.4 Terminal connection diagrams

(1) FM type

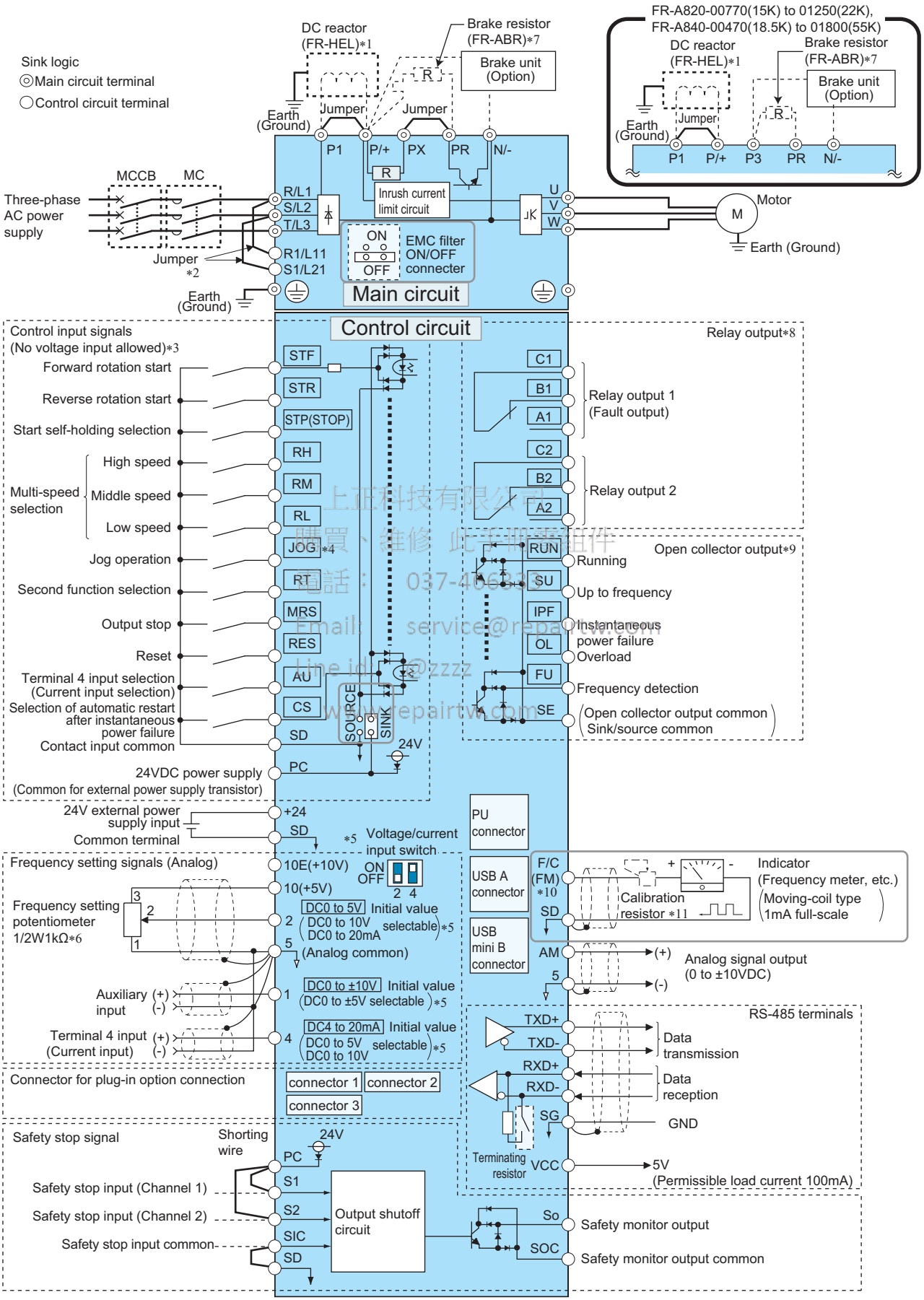

上正科技有限公司
購買、維修 此手冊零組件
電話： 037-466333
Email: service@repairtw.com
Line id: @zzzz
www.repairtw.com

Terminal connection diagrams

*1 FR-A820-03800(75K) or higher and FR-A840-02160(75K) or higher, always connect an optional DC reactor (FR-HEL). (To select a DC reactor, refer to page 670, and select one according to the applicable motor capacity.) If a jumper is installed across the terminals P1 and P/+, remove the jumper before installing the DC reactor.

*2 When using separate power supply for the control circuit, remove the jumper between R1/L11 and S1/L21.

*3 The function of these terminals can be changed with the input terminal assignment **(Pr.178 to Pr.189)**. (Refer to page 416.)

*4 Terminal JOG is also used as a pulse train input terminal. Use **Pr.291** to choose JOG or pulse.

*5 Terminal input specifications can be changed by analog input specification switchover **(Pr.73, Pr.267)**. To input a voltage (0 to 5 V/0 to 10 V), set the voltage/current input switch OFF. To input a current (4 to 20 mA), set the voltage/current input switch ON. (Refer to page 391.)

*6 It is recommended to use 2W1kΩ when the frequency setting signal is changed frequently.

*7 Remove the jumper between PR and PX to connect the brake resistor. (FR-A820-00490(7.5K) or lower and FR-A840-00250(7.5K) or lower). The terminal PR is equipped in the FR-A820-01250(22K) or lower and FR-A840-00620(22K) or lower. Install a thermal relay to prevent overheating and damage of discharging resistors. (Refer to page 71.)

*8 The function of these terminals can be changed with the output terminal assignment **(Pr.195, Pr.196)**. (Refer to page 370.)

*9 The function of these terminals can be changed with the output terminal assignment **(Pr.190 to Pr.194)**. (Refer to page 370.)

*10 The terminal FM can be used to output pulse trains as open collector output by setting **Pr.291**.

*11 Not required when calibrating the scale with the operation panel.

REMARKS

- To prevent a malfunction due to noise, keep the signal cables 10 cm (3.94 inches) or more away from the power cables. Also, separate the main circuit cables at the input side from the main circuit cables at the output side.
- After wiring, wire offcuts must not be left in the inverter.
  Wire offcuts can cause an alarm, failure or malfunction. Always keep the inverter clean.
  When drilling mounting holes in an enclosure etc., take caution not to allow chips and other foreign matter to enter the inverter.
- Set the voltage/current input switch correctly. Incorrect setting may cause a fault, failure or malfunction.

上正科技有限公司
購買、維修 此手冊零組件
電話： 037-466333
Email: service@repairtw.com
Line id: @zzzz
www.repairtw.com

(2) CA type

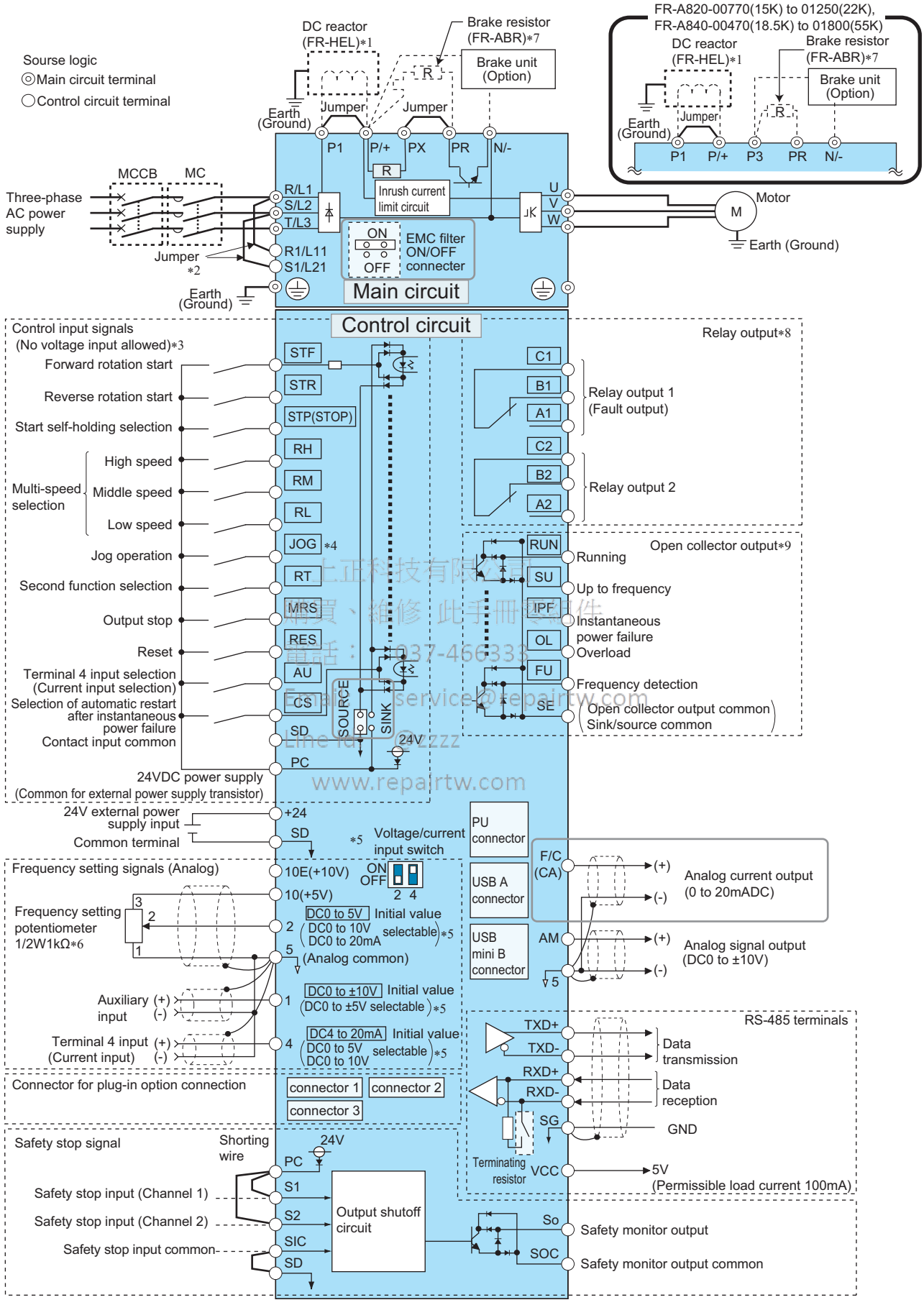

上正科技有限公司
購買、維修 此手冊零組件
電話：037-466333
Email: service@repairtw.com
Line id: @zzzz
www.repairtw.com

2

Terminal connection diagrams

*1 FR-A820-03800(75K) or higher and FR-A840-02160(75K) or higher, always connect an optional DC reactor (FR-HEL). (To select a DC reactor, refer to page 670, and select one according to the applicable motor capacity.) If a jumper is installed across the terminals P1 and P/+, remove the jumper before installing the DC reactor.

*2 When using separate power supply for the control circuit, remove the jumper between R1/L11 and S1/L21.

*3 The function of these terminals can be changed with the input terminal assignment **(Pr.178 to Pr.189)**. (Refer to page 416.)

*4 Terminal JOG is also used as a pulse train input terminal. Use **Pr.291** to choose JOG or pulse.

*5 Terminal input specifications can be changed by analog input specification switchover **(Pr.73, Pr.267)**. To input a voltage (0 to 5 V/0 to 10 V), set the voltage/current input switch OFF. To input a current (4 to 20 mA), set the voltage/current input switch ON. (Refer to page 391.)

*6 It is recommended to use 2W1kΩ when the frequency setting signal is changed frequently.

*7 Remove the jumper between PR and PX to connect the brake resistor. (FR-A820-00490(7.5K) or lower and FR-A840-00250(7.5K) or lower). The terminal PR is equipped in the FR-A820-01250(22K) or lower and FR-A840-00620(22K) or lower. Install a thermal relay to prevent overheating and damage of discharging resistors. (Refer to page 71.)

*8 The function of these terminals can be changed with the output terminal assignment **(Pr.195, Pr.196)**. (Refer to page 370.)

*9 The function of these terminals can be changed with the output terminal assignment **(Pr.190 to Pr.194)**. (Refer to page 370.)

REMARKS

- To prevent a malfunction due to noise, keep the signal cables 10 cm (3.94 inches) or more away from the power cables. Also, separate the main circuit cables at the input side from the main circuit cables at the output side.
- After wiring, wire offcuts must not be left in the inverter.
  Wire offcuts can cause an alarm, failure or malfunction. Always keep the inverter clean.
  When drilling mounting holes in an enclosure etc., take caution not to allow chips and other foreign matter to enter the inverter.
- Set the voltage/current input switch correctly. Incorrect setting may cause a fault, failure or malfunction.

上正科技有限公司
購買、維修 此手冊零組件
電話： 037-466333
Email: service@repairtw.com
Line id: @zzzz
www.repairtw.com

2.5 Main circuit terminals

2.5.1 Details on the main circuit terminals

Terminal symbol	Terminal name	Terminal function description	Refer to page
R/L1, S/L2, T/L3	AC power input	Connect these terminals to the commercial power supply. Do not connect anything to these terminals when using the high power factor converter (FR-HC2) or the power regeneration common converter (FR-CV).	—
U, V, W	Inverter output	Connect these terminals to a three-phase squirrel cage motor or a PM motor.	—
R1/L11, S1/L21	Power supply for the control circuit	Connected to the AC power supply terminals R/L1 and S/L2. To retain the fault display and fault output, or to use a high power factor converter (FR-HC2) or a power regeneration common converter (FR-CV), remove the jumpers across terminals R/L1 and R1/L11 and across S/L2 and S1/L21, and supply external power to these terminals. The power capacity necessary when separate power is supplied from R1/L11 and S1/L21 differs according to the inverter capacity. FR-A820-00630(11K) or lower, FR-A840-00380(15K) or lower 60 VA FR-A820-00770(15K) or higher, FR-A840-00470(18.5K) or higher 80 VA	54
P/+, PR	Brake resistor connection FR-A820-00630(11K) or lower FR-A820-00770(15K) or lower	Connect an optional brake resistor (FR-ABR) across the terminals P/+ and PR. Remove the jumper across the terminals PR and PX for the inverter capacity that has the terminal PX. Connecting a brake resistor increases the regenerative braking capability.	71
P3, PR	Brake resistor connection FR-A820-00770(15K) to 01250(22K) FR-A840-00470(18.5K) to 01800(55K)	Connect an optional brake resistor across the terminals P3 and PR. Connecting a brake resistor increases the regenerative braking capability.	
P/+, N/-	Brake unit connection	Connect the brake unit (FR-BU2, FR-BU, BU), power regeneration common converter (FR-CV), power regeneration converter (MT-RC), high power factor converter (FR-HC2), or DC power supply (under DC feeding mode). When connecting multiple inverters, FR-A820-00770(15K) to 01250(22K) or FR-A840-00470(18.5K) to 01800(55K), in parallel using the FR-CV, FR-HC2, or DC power supply, always use either of the terminal P/+ or P3 for the connection. (Do not use the terminals P/+ and P3 together.)	73
P3, N/-	Brake unit connection FR-A820-00770(15K) to 01250(22K) FR-A840-00470(18.5K) to 01800(55K)		
P/+, P1	DC reactor connection FR-A820-03160(55K) or lower FR-A840-01800(55K) or lower	Remove the jumper across terminals P/+ and P1, and connect a DC reactor. When a DC reactor is not connected, the jumper across terminals P/+ and P1 should not be removed. When using a motor with 75 kW or higher, always connect an optional DC reactor.	79
	DC reactor connection FR-A820-03800(75K) or higher FR-A840-02160(75K) or higher	Always connect an optional DC reactor.	
PR, PX	Built-in brake circuit connection	When the jumper is connected across terminals PX and PR (initial status), the built-in brake circuit is valid. The built-in brake circuit is equipped in the FR-A820-00490(7.5K) or lower and FR-A840-00250(7.5K) or lower.	—
⏚	Earth (ground)	For earthing (grounding) the inverter chassis. This must be earthed (grounded).	44

上正科技有限公司
購買、維修 此手冊零組件
電話： 037-466333
Email: service@repairtw.com
Line id: @zzzz
www.repairtw.com

REMARKS

- When connecting an optional brake resistor (FR-ABR) or a brake unit (FR-BU2, FR-BU, BU), remove the jumpers across the terminals PR and PX. For the details, refer to page 71.

2.5.2 Terminal layout of the main circuit terminals, wiring of power supply and the motor

FR-A820-00046(0.4K), FR-A820-00077(0.75K)

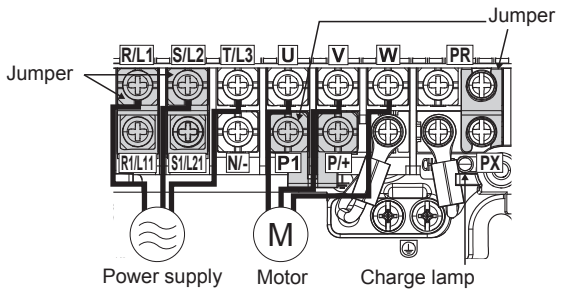

FR-A820-00105(1.5K) to FR-A820-00250(3.7K)
FR-A840-00023(0.4K) to FR-A840-00126(3.7K)

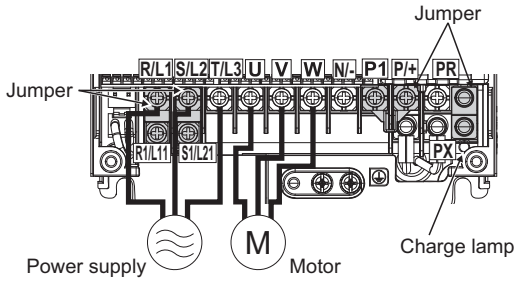

FR-A820-00340(5.5K), FR-A820-00490(7.5K)
FR-A840-00170(5.5K), FR-A840-00250(7.5K)

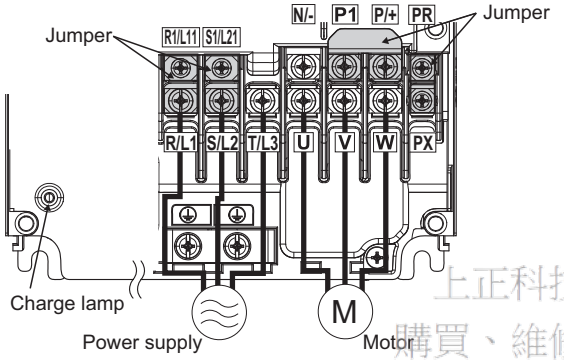

FR-A820-00630(11K)
FR-A840-00310(11K), FR-A840-00380(15K)

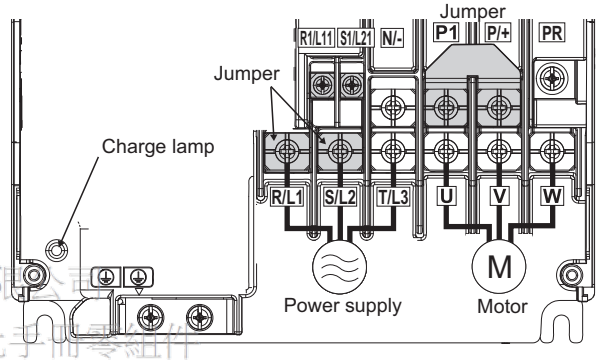

FR-A820-00770(15K) to FR-A820-01250(22K)
FR-A840-00470(18.5K), FR-A840-00620(22K)

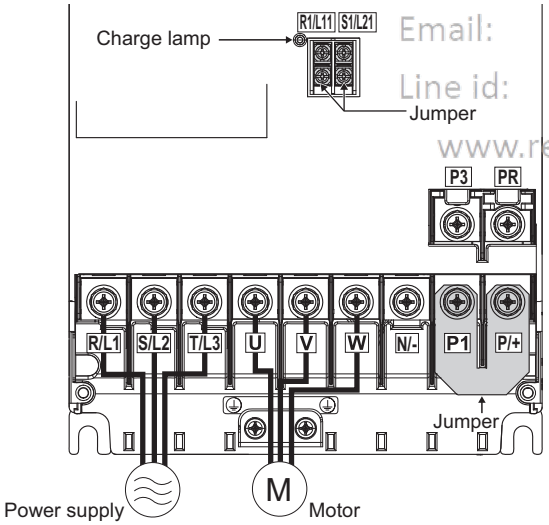

FR-A820-01540(30K)*1
FR-A840-00770(30K)

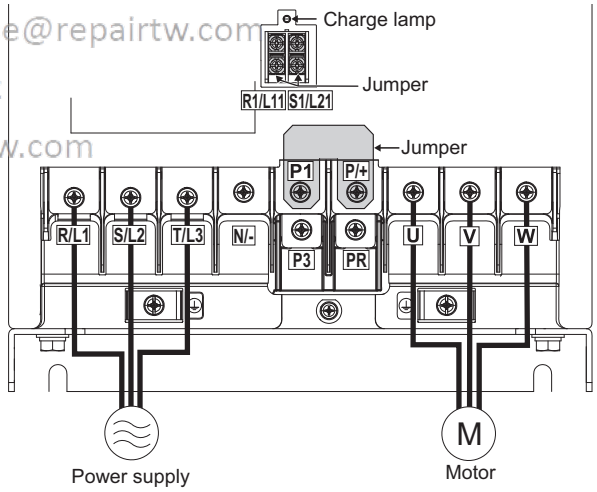

上正科技有限公司
購買、維修 此手冊零組件
電話： 037-466333
Email: service@repairtw.com
Line id: @zzzz
www.repairtw.com

FR-A820-01870(37K), FR-A820-02330(45K)*1

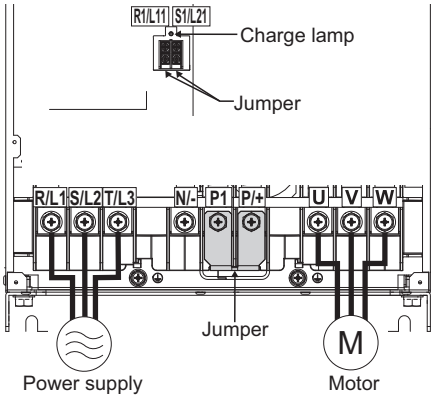

FR-A820-03160(55K)

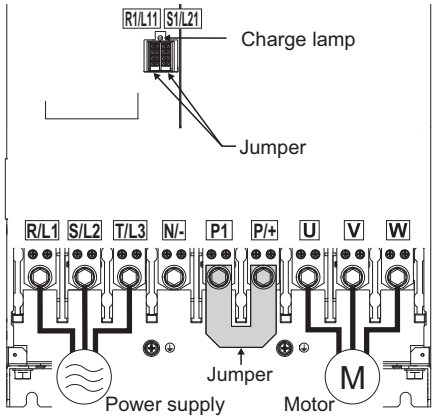

FR-A820-03800(75K), FR-A820-04750(90K)
FR-A840-03250(110K) to FR-A840-04810(185K)

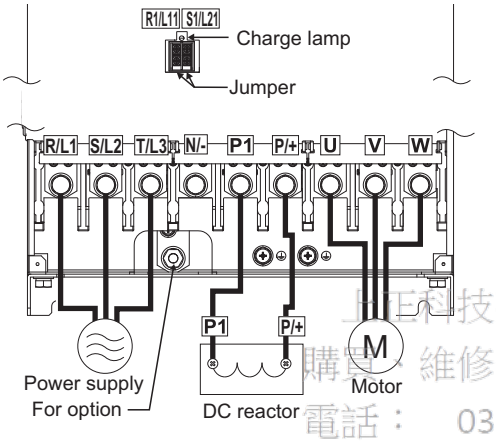

FR-A840-00930(37K) to FR-A840-01800(55K)

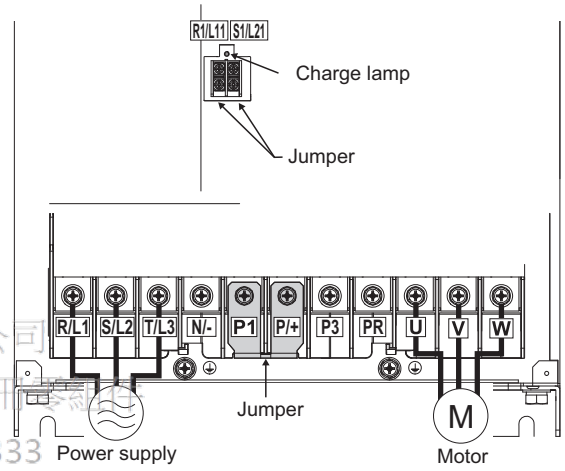

上旺科技有限公司
購買 維修 此手冊
電話： 037-466333
Email: service@repairtw.com
Line id: @zzzz
www.repairtw.com

FR-A840-02160(75K), FR-A840-02600(90K)

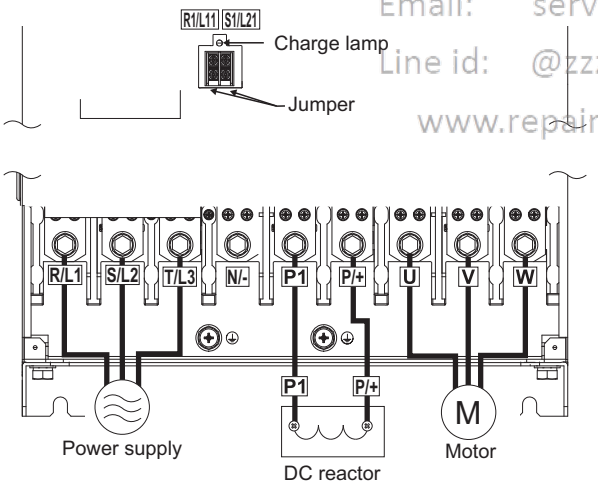

FR-A840-05470(220K) to FR-A840-06830(280K)

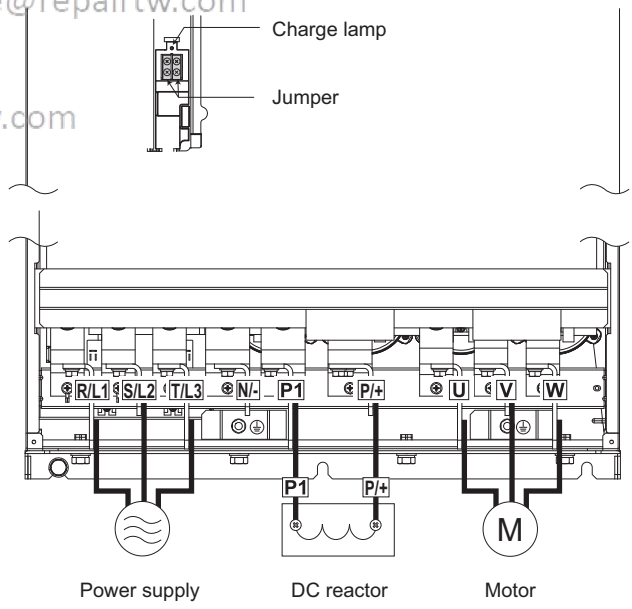

*1 Terminals P3 and PR of the FR-A820-30K(01540) to 45K(02330) are not provided with a screw. Do not connect anything to this.

REMARKS

- Make sure the power cables are connected to the R/L1, S/L2, and T/L3. (Phase need not be matched.) Never connect the power cable to the U, V, and W of the inverter. Doing so will damage the inverter.
- Connect the motor to U, V, and W. The phase need to be matched.
- When wiring the inverter main circuit conductor of the FR-A840-05470(220K) or higher, tighten a nut from the right side of the conductor. When wiring two wires, place wires on both sides of the conductor. (Refer to the drawing on the right.) For wiring, use bolts (nuts) provided with the inverter.

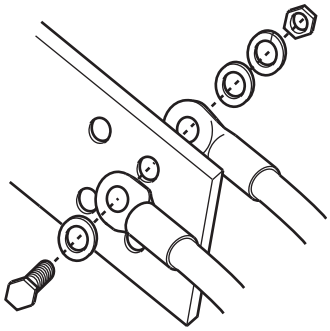

● Handling of the wiring cover

(FR-A820-00630(11K) to 01250(22K), FR-A840-00310(11K) to 00620(22K))

For the hook of the wiring cover, cut off the necessary parts using a pair of needle-nose pliers etc.

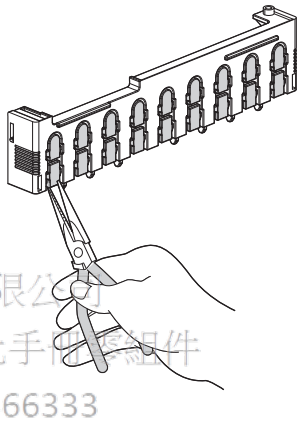

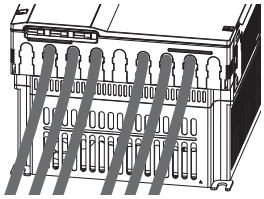

REMARKS

- Cut off the same number of lugs as wires. If parts where no wire is put through have been cut off (10 mm or more), protective structure (JEM1030) becomes an open type (IP00).

上亞科技有限公司
購買、維修 此手冊零組件
電話： 037-466333
Email: service@repairtw.com
Line id: @zzzz
www.repairtw.com

2.5.3 Applicable cables and the wiring length

Select a recommended cable size to ensure that the voltage drop will be 2% or less.
If the wiring distance is long between the inverter and motor, the voltage drop in the main circuit wires will cause the motor torque to decrease especially at a low speed.
The following table indicates a selection example for the wiring length of 20 m.

200V class (220V power reception (with 150% rated current for one minute))

Applicable inverter model FR-A820-[ ]	Terminal screw size*4	Tightening torque N·m	Crimping terminal		Cable gauge								
					HIV cables, etc. (mm^2)*1				AWG/MCM*2		PVC cables, etc. (mm^2)*3		
			R/L1, S/L2, T/L3	U, V, W	R/L1, S/L2, T/L3	U, V, W	P/+, P1	Earthing (grounding) cable	R/L1, S/L2, T/L3	U, V, W	R/L1, S/L2, T/L3	U, V, W	Earthing (grounding) cable
00046(0.4K) to 00167(2.2K)	M4	1.5	2-4	2-4	2	2	2	2	14	14	2.5	2.5	2.5
00250(3.7K)	M4	1.5	5.5-4	5.5-4	3.5	3.5	3.5	3.5	12	12	4	4	4
00340(5.5K)	M5(M4)	2.5	5.5-5	5.5-5	5.5	5.5	5.5	5.5	10	10	6	6	6
00490(7.5K)	M5(M4)	2.5	14-5	8-5	14	8	14	5.5	6	8	16	10	16
00630(11K)	M5	2.5	14-5	14-5	14	14	14	8	6	6	16	16	16
00770(15K)	M6	4.4	22-6	22-6	22	22	22	14	4	4	25	25	16
00930(18.5K)	M8(M6)	7.8	38-8	38-8	38	38	38	14	2	2	35	35	25
01250(22K)	M8(M6)	7.8	38-8	38-8	38	38	38	22	2	2	35	35	25
01540(30K)	M8(M6)	7.8	60-8	60-8	60	60	60	22	1/0	1/0	50	50	25
01870(37K)	M10(M8)	14.7	80-10	80-10	80	80	80	22	3/0	3/0	70	70	35
02330(45K)	M10(M8)	14.7	100-10	100-10	100	100	100	38	4/0	4/0	95	95	50
03160(55K)	M12(M8)	24.5	100-12	100-12	100	100	100	38	4/0	4/0	95	95	50
03800(75K)	M12(M10)	24.5	150-12	150-12	125	125	125	38	250	250	—	—	—
04750(90K)	M12(M10)	24.5	150-12	150-12	150	150	150	38	300	300	—	—	—

400 V class (440 V input power supply (with 150% rated current for one minute))

Applicable inverter model FR-A840-[ ]	Terminal screw size*4	Tightening torque N·m	Crimping terminal		Cable gauge								
					HIV cables, etc. (mm^2)*1				AWG/MCM*2		PVC cables, etc. (mm^2)*3		
			R/L1, S/L2, T/L3	U, V, W	R/L1, S/L2, T/L3	U, V, W	P/+, P1	Earthing (grounding) cable	R/L1, S/L2, T/L3	U, V, W	R/L1, S/L2, T/L3	U, V, W	Earthing (grounding) cable
00023(0.4K) to 00126(3.7K)	M4	1.5	2-4	2-4	2	2	2	2	14	14	2.5	2.5	2.5
00170(5.5K)	M4	1.5	2-4	2-4	2	2	3.5	3.5	12	14	2.5	2.5	4
00250(7.5K)	M4	1.5	5.5-4	5.5-4	3.5	3.5	3.5	3.5	12	12	4	4	4
00310(11K)	M5	2.5	5.5-5	5.5-5	5.5	5.5	5.5	5.5	10	10	6	6	10
00380(15K)	M5	2.5	8-5	8-5	8	8	8	5.5	8	8	10	10	10
00470(18.5K)	M6	4.4	14-6	8-6	14	8	14	8	6	8	16	10	16
00620(22K)	M6	4.4	14-6	14-6	14	14	22	14	6	6	16	16	16
00770(30K)	M6	4.4	22-6	22-6	22	22	22	14	4	4	25	25	16
00930(37K)	M8	7.8	22-8	22-8	22	22	22	14	4	4	25	25	16
01160(45K)	M8	7.8	38-8	38-8	38	38	38	22	1	2	50	50	25
01800(55K)	M8	7.8	60-8	60-8	60	60	60	22	1/0	1/0	50	50	25
02160(75K)	M10	14.7	60-10	60-10	60	60	60	22	1/0	1/0	50	50	25
02600(90K)	M10	14.7	60-10	60-10	60	60	80	22	3/0	3/0	50	50	25
03250(110K)	M10(M12)	14.7	80-10	80-10	80	80	80	38	3/0	3/0	70	70	35
03610(132K)	M10(M12)	14.7	100-10	100-10	100	100	100	38	4/0	4/0	95	95	50
04320(160K)	M12(M10)	24.5	150-12	150-12	125	150	150	38	250	250	120	120	70
04810(185K)	M12(M10)	24.5	150-12	150-12	150	150	150	38	300	300	150	150	95
05470(220K)	M12(M10)	46	100-12	100-12	2×100	2×100	2×100	60	2×4/0	2×4/0	2×95	2×95	95
06100(250K)	M12(M10)	46	100-12	100-12	2×100	2×100	2×125	60	2×4/0	2×4/0	2×95	2×95	95
06830(280K)	M12(M10)	46	150-12	150-12	2×125	2×125	2×125	60	2×250	2×250	2×120	2×120	120

*1 For the FR-A820-03160(55K) or lower and FR-A840-01800(55K) or lower, it is the gauge of a cable with the continuous maximum permissible temperature of 75°C (HIV cable (600 V grade heat-resistant PVC insulated wire), etc.). It assumes a surrounding air temperature of 50°C or lower and the wiring distance of 20 m or shorter.
For the FR-A820-03800(75K) or higher, FR-A840-02160(75K) or higher, it is the gauge of the cable with the continuous maximum permissible temperature of 90°C or higher. (LMFC (heat resistant flexible cross-linked polyethylene insulated cable), etc.). It assumes a surrounding air temperature of 50°C or lower and in-enclosure wiring.

購買維修此手冊零組件
電話：037-466333
Email: service@repairtw.com
Line id: ...
www.repairtw.com

*2 For all the 200 V class capacities and FR-A840-01160(45K) or lower, it is the gauge of a cable with the continuous maximum permissible temperature of 75°C (THHW cable). It assumes a surrounding air temperature of 40°C or lower and the wiring distance of 20 m or shorter.
For the FR-A840-01800(55K) or higher, it is the gauge of a cable with the continuous maximum permissible temperature of 90°C (THHN cable). It assumes a surrounding air temperature of 40°C or lower and in-enclosure wiring. (Selection example for use mainly in the United States.)

*3 For the FR-A820-00770(15K) or lower and the FR-A840-01160(45K) or lower, it is the gauge of a cable with the continuous maximum permissible temperature of 70°C (PVC cable). It assumes a surrounding air temperature of 40°C or lower and the wiring distance of 20 m or shorter.
For the FR-A820-00930(18.5K) or higher and the FR-A840-01800(55K) or higher, it is the gauge of a cable with the continuous maximum permissible temperature of 90°C (XLPE cable). It assumes a surrounding air temperature of 40°C or lower and in-enclosure wiring. (Selection example for use mainly in Europe.)

*4 The terminal screw size indicates the size of terminal screw for R/L1, S/L2, T/L3, U, V, W, PR, PX, P/+, N/-, P1, and a screw for earthing (grounding).
The screw size for PR and PX terminals of FR-A820-00340(5.5K) and FR-A820-00490(7.5K) is indicated in parentheses.
The screw size for earthing (grounding) of FR-A820-00930(18.5K) or higher and FR-A840-04320(160K) or higher is indicated in parentheses.
A screw for P/+ terminal for option connection of the FR-A840-03250(110K) and FR-A840-03610(132K) is indicated in parentheses.

The line voltage drop can be calculated by the following formula:

$$\text{Line voltage drop [V]} = \frac{\sqrt{3} \times \text{wire resistance[m}\Omega\text{/m]} \times \text{wiring distance[m]} \times \text{current[A]}}{1000}$$

Use a larger diameter cable when the wiring distance is long or when it is desired to decrease the voltage drop (torque reduction) in the low speed range.

REMARKS

- Tighten the terminal screw to the specified torque.
  A screw that has been tightened too loosely can cause a short circuit or malfunction.
  A screw that has been tightened too tightly can cause a short circuit or malfunction due to the unit breakage.
- Use crimping terminals with insulation sleeves to wire the power supply and motor.

上正科技有限公司
購買、維修 此手冊零組件
電話： 037-466333
Email: service@repairtw.com
Line id: @zzzz
www.repairtw.com

(1) Total wiring length

●With induction motor

Connect one or more induction motors within the total wiring length shown in the following table. (The wiring length should be 100 m or shorter under vector control.)

Pr.72 setting (carrier frequency)	FR-A820-00046(0.4K) FR-A840-00023(0.4K)	FR-A820-00077(0.75K) FR-A840-00038(0.75K)	FR-A820-00105(1.5K) or higher FR-A840-00052(1.5K) or higher
2 (2 kHz) or lower	300 m	500 m	500 m
3 (3 kHz) or higher	200 m	300 m	500 m

∗The wiring length should be 100 m or less under vector control.

Total wiring length (FR-A820-00105(1.5K) or higher, FR-A840-00052(1.5K) or higher)

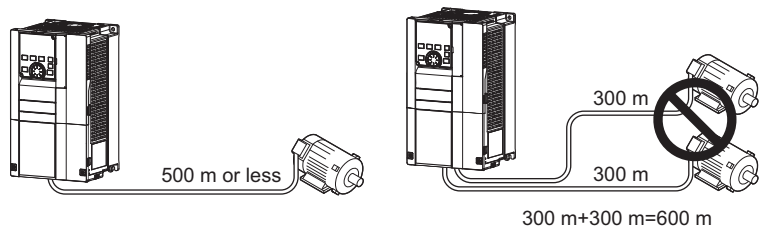

When driving a 400 V class motor by the inverter, surge voltages attributable to the wiring constants may occur at the motor terminals, deteriorating the insulation of the motor. In this case, take one of the following measures.

- Use a "400 V class inverter-driven insulation-enhanced motor" and set **Pr.72 PWM frequency selection** according to the wiring length.

Wiring length 50m or shorter	Wiring length 50 m to 100 m	Wiring length longer than 100 m
15 (14.5 kHz) or lower	9 (9 kHz) or lower	4 (4 kHz) or lower

- For the FR-A820-03160(55K) or lower and the FR-A840-01800(55K) or lower, connect a surge voltage suppression filter (FR-ASF-H/FR-BMF-H) at the output side of the inverter. For the FR-A820-03800(75K) or higher and the FR-A840-02160(75K) or higher, connect a sine wave filter (MT-BSL/BSC) at the output side of the inverter.

上正科技有限公司
購買 維修 此手冊零組件
電話： 937-466333
Email: service@repairtw.com
Line id: @2222
www.repairtw.com

●With PM motor

The wiring length should be 100 m or shorter when connecting a PM motor.
Use one PM motor for one inverter. Multiple PM motors cannot be connected to an inverter.
When the wiring length exceeds 50 m for a 400 V class motor driven by an inverter under PM sensorless vector control, set "9" (6 kHz) or less in **Pr.72 PWM frequency selection**.

REMARKS

- Especially for long-distance wiring or wiring with shielded cables, the inverter may be affected by a charging current caused by stray capacitances of the wiring, leading to an activation of the overcurrent protection, malfunction of the fast-response current limit operation, or even to an inverter failure. It may also cause a malfunction or fault of the equipment connected ON the inverter output side. Stray capacitances of the wiring differ by the installation condition, use the total wiring length in the table above as reference values. If the fast-response current limit function malfunctions, disable this function. (Refer to **Pr.156 Stall prevention operation selection** on page 336.)
- A surge voltage suppression filter (FR-ASF-H/FR-BMF-H) can be used under V/F control and Advanced magnetic flux vector control. A sine wave filter (MT-BSL/BSC) can be used under V/F control. Do not use the filters under different control methods.
- For the details of **Pr.72 PWM frequency selection**, refer to page 270.
- Refer to page 92 to drive a 400V class motor by an inverter.
- The carrier frequency is limited during PM sensorless vector control. (Refer to page 270.)

(2) Cable size for the control circuit power supply (terminals R1/L11 and S1/L21)

- Terminal screw size: M4
- Cable gauge: 0.75 mm^2 to 2 mm^2
- Tightening torque: 1.5 N·m

2.5.4 Earthing (grounding) precautions

- Always earth (ground) the motor and inverter.

(1) Purpose of earthing (grounding)

Generally, an electrical apparatus has an earth (ground) terminal, which must be connected to the ground before use.
An electrical circuit is usually insulated by an insulating material and encased. However, it is impossible to manufacture an insulating material that can shut off a leakage current completely, and actually, a slight current flows into the case. The purpose of earthing (grounding) the case of an electrical apparatus is to prevent operators from getting an electric shock from this leakage current when touching it.
To avoid the influence of external noises, this earthing (grounding) is important to audio equipment, sensors, computers and other apparatuses that handle low-level signals or operate very fast.

(2) Earthing (grounding) methods and earthing (grounding) work

As described previously, earthing (grounding) is roughly classified into an electrical shock prevention type and a noise-influenced malfunction prevention type. Therefore, these two types should be clearly distinguished, and the following work must be done to prevent the leakage current having the inverter's high frequency components from entering the malfunction prevention type earthing (grounding):

(a) Whenever possible, use the independent earthing (grounding) for the inverter.
If independent earthing (grounding) (I) is not available, use (II) common earthing (grounding) in the figure below where the inverter is connected with the other equipment at an earthing (grounding) point. Do not use the other equipment's earthing (grounding) cable to earth (ground) the inverter as shown in (III).
A leakage current containing many high frequency components flows into the earthing (grounding) cables of the inverter and peripheral devices. Because of this, the inverter must be earthed (grounded) separately from EMI-sensitive devices.
In a high building, it may be effective to use the EMI prevention type earthing (grounding) connecting to an iron structure frame, and electric shock prevention type earthing (grounding) with the independent earthing (grounding) together.

(b) This inverter must be earthed (grounded). Earthing (Grounding) must conform to the requirements of national and local safety regulations and electrical codes. (NEC section 250, IEC 536 class 1 and other applicable standards).
A neutral-point earthed (grounded) power supply for 400 V class inverter in compliance with EN standard must be used.

(c) Use the thickest possible earthing (grounding) cable. The earthing (grounding) cable should be the size indicated in the table on page 41.

(d) The earthing (grounding) point should be as close as possible to the inverter, and the earth (ground) wire length should be as short as possible.

(e) Run the earthing (grounding) cable as far away as possible from the I/O wiring of equipment sensitive to noises and run them in parallel in the minimum distance.

上正科技有限公司
購買、維修 此手冊零組件
電話： 937-466333
Email: service@repairtw.com
Line id: @zzzz
www.repairtw.com

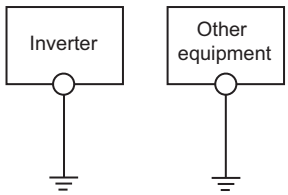

(I) Independent earthing (grounding).....Good

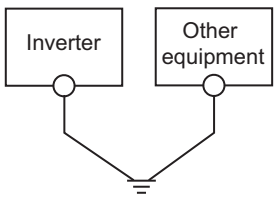

(II) Common earthing (grounding).....Good

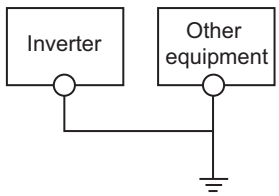

(III) Common earthing (grounding) cable.....Not allowed

To be compliant with the EU Directive (Low Voltage Directive), refer to the Instruction Manual (Startup).

2.6 Control circuit

2.6.1 Details on the control circuit terminals

Input signal function of the terminals in [ ] can be selected by setting **Pr.178 to Pr.196 (I/O terminal function selection)**. (Refer to page 416.)

(1) Input signal

Type	Terminal Symbol	Terminal name	Terminal function description		Rated specification	Refer to page
Contact input	STF	Forward rotation start	Turn ON the STF signal to start forward rotation and turn it OFF to stop.	When the STF and STR signals are turned ON simultaneously, the stop command is given.	Input resistance 4.7 kΩ Voltage when contacts are open: 21 to 27 VDC When contacts are short-circuited: 4 to 6 mADC	422
	STR	Reverse rotation start	Turn ON the STR signal to start reverse rotation and turn it OFF to stop.			
	STOP	Start self-holding selection	Turn ON the STOP signal to self-hold the start signal.			422
	RH, RM, RL	Multi-speed selection	Multi-speed can be selected according to the combination of RH, RM and RL signals.			319
	JOG	Jog mode selection	Turn ON the JOG signal to enable JOG operation (initial setting) and turn ON the start signal (STF or STR) to start JOG operation.			318
		Pulse train input	Terminal JOG is also used as a pulse train input terminal. To use as a pulse train input terminal, change the **Pr.291** setting. (maximum input pulse: 100k pulses/s)		Input resistance 2 kΩ When contacts are short-circuited: 8 to 13 mADC	315
	RT	Second function selection	Turn ON the RT signal to enable the second function. When the second function such as "second torque boost" and "second V/F (base frequency)" is set, turning ON the RT signal enables the selected function.		Input resistance 4.7 kΩ Voltage when contacts are open: 21 to 27 VDC When contacts are short-circuited: 4 to 6 mADC	420
	MRS	Output stop	Turn ON the MRS signal (20 ms or more) to stop the inverter output. Use this signal to shut off the inverter output when stopping the motor with an electromagnetic brake.			419
	RES	Reset	Use this signal to reset a fault output provided when a protective function is activated. Turn ON the RES signal for 0.1 s or longer, then turn it OFF. In the initial setting, reset is set always-enabled. By setting **Pr.75**, reset can be set enabled only at fault occurrence. The inverter recovers about 1 s after the reset is released.			252
	AU	Terminal 4 input selection	The terminal 4 function is available only when the AU signal is turned ON. Turning the AU signal ON makes terminal 2 invalid.			391
	CS	Selection of automatic restart after instantaneous power failure	When the CS signal is left ON, the inverter restarts automatically at power restoration. Note that restart setting is necessary for this operation. In the initial setting, a restart is disabled.			511, 517
	SD	Contact input common (sink)*2	Common terminal for the contact input terminal (sink logic), terminal FM.		------	-
		External transistor common (source)*3	Connect this terminal to the power supply common terminal of a transistor output (open collector output) device, such as a programmable controller, in the source logic to avoid malfunction by undesirable current.			
		24 VDC power supply common	Common terminal for the 24 VDC power supply (terminal PC, terminal +24) Isolated from terminals 5 and SE.			
	PC	External transistor common (sink)*2	Connect this terminal to the power supply common terminal of a transistor output (open collector output) device, such as a programmable controller, in the sink logic to avoid malfunction by undesirable currents.		Power supply voltage range 19.2 to 28.8 VDC Permissible load current 100 mA	50
		Contact input common (source)*3	Common terminal for contact input terminal (source logic).			
		24 VDC power supply	Can be used as a 24 VDC 0.1 A power supply.			

上亞科技有限公司 購買維修此手冊零組件 電話： 037-466333 Email: service@repairtw.com Line id: @577 www.repairtw.com

Control circuit

Type	Terminal Symbol	Terminal name	Terminal function description	Rated specification	Refer to page
Frequency setting	10E	Frequency setting power supply	When connecting the frequency setting potentiometer at an initial status, connect it to the terminal 10. Change the input specifications of the terminal 2 using **Pr.73** when connecting it to the terminal 10E.	10 VDC ±0.4 V Permissible load current 10 mA	391
	10			5 VDC ±0.5 V Permissible load current 10 mA	391
	2	Frequency setting (voltage)	Inputting 0 to 5 VDC (or 0 to 10 V, 0 to 20 mA) provides the maximum output frequency at 5 V (10 V, 20 mA) and makes input and output proportional. Use **Pr.73** to switch among input 0 to 5 VDC (initial setting), 0 to 10 VDC, and 0 to 20 mA. Set the voltage/current input switch in the ON position to select current input (0 to 20 mA). *1	When voltage is input: Input resistance 10 kΩ ±1 kΩ Maximum permissible voltage 20 VDC When current is input: Input resistance 245 Ω ±5 Ω Permissible maximum current 30 mA 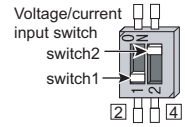	391
	4	Frequency setting (current)	Inputting 4 to 20 mADC (or 0 to 5 V, 0 to 10 V) provides the maximum output frequency at 20 mA and makes input and output proportional. This input signal is valid only when the AU signal is ON (terminal 2 input is invalid). Use **Pr.267** to switch among input 4 to 20 mA (initial setting), 0 to 5 VDC, and 0 to 10 VDC. Set the voltage/current input switch in the OFF position to select voltage input (0 to 5 V/0 to 10 V). *1 Use **Pr.858** to switch terminal functions.		391
	1	Frequency setting auxiliary	Inputting 0 to ±5 VDC or 0 to ±10 VDC adds this signal to terminal 2 or 4 frequency setting signal. Use **Pr.73** to switch between input 0 to ±5 VDC and 0 to ±10 VDC (initial setting). Use **Pr.868** to switch terminal functions.	Input resistance 10 kΩ ±1 kΩ Permissible maximum voltage ±20 VDC	391
	5	Frequency setting common	Common terminal for frequency setting signal (terminal 2, 1 or 4) and analog output terminal AM, CA. Do not earth (ground).	------	391
Thermistor	10 2	PTC thermistor input	For receiving PTC thermistor outputs. When PTC thermistor is valid (**Pr.561** ≠ "9999"), the terminal 2 is not available for frequency setting.	Applicable PTC thermistor specification Overheat detection resistance: 0.5 to 30 kΩ (Set by **Pr.561**)	322
External power supply input	+24	24 V external power supply input	For connecting a 24 V external power supply. If a 24 V external power supply is connected, power is supplied to the control circuit while the main power circuit is OFF.	Input voltage 23 to 25.5 VDC Input current 1.4 A or less	56

*1 Set **Pr.73**, **Pr.267**, and the voltage/current input switch correctly, then input an analog signal in accordance with the setting.
Applying a voltage with the voltage/current input switch ON (current input is selected) or a current with the switch OFF (voltage input is selected) could cause component damage of the inverter or analog circuits of output devices. (For the details, refer to page 391.)
*2 Sink logic is initially set for the FM-type inverter.
*3 Source logic is initially set for the CA-type inverter.

上正科技有限公司
Email service@repairtw.com
www.repairtw.com

(2) Output signal

Type	Terminal Symbol	Terminal name	Terminal function description		Rated specification	Refer to page
Relay	A1, B1, C1	Relay output 1 (fault output)	1 changeover contact output that indicates that an inverter's protective function has been activated and the outputs are stopped. Fault: discontinuity across B and C (continuity across A and C), Normal: continuity across Band C (discontinuity across A and C)		Contact capacity 230 VAC 0.3 A (power factor = 0.4) 30 VDC 0.3 A	370
	A2, B2, C2	Relay output 2	1 changeover contact output			370
Open collector	RUN	Inverter running	Switched to LOW when the inverter output frequency is equal to or higher than the starting frequency (initial value 0.5 Hz). Switched to HIGH during stop or DC injection brake operation.		Permissible load 24 VDC (maximum 27 VDC) 0.1 A (The voltage drop is 2.8 V at maximum while the signal is ON.) LOW is when the open collector output transistor is ON (conducted). HIGH is when the transistor is OFF (not conducted).	370
	SU	Up to frequency	Switched to LOW when the output frequency is within the set frequency range ±10% (initial value). Switched to HIGH during acceleration/deceleration and at a stop.	Fault code (4 bits) output. (Refer to page 387.)		378
	OL	Overload warning	Switched to LOW when stall prevention is activated by the stall prevention function. Switched to HIGH when stall prevention is canceled.			342
	IPF	Instantaneous power failure	Switched to LOW when an instantaneous power failure occurs or when the undervoltage protection is activated.			511, 523
	FU	Frequency detection	Switched to LOW when the inverter output frequency is equal to or higher than the preset detection frequency, and to HIGH when it is less than the preset detection frequency.			378
	SE	Open collector output common	Common terminal for terminals RUN, SU, OL, IPF, FU		------	–
Pulse	FM *1	For meter	Outputs a selected monitored item (such as output frequency) among several monitored items. The signal is not output during an inverter reset. The output signal is proportional to the magnitude of the corresponding monitoring item. Use **Pr.55**, **Pr.56**, and **Pr.866** to set full scales for the monitored output frequency, output current, and torque. (Refer to page 356.)	Output item: Output frequency (initial setting)	Permissible load current 2 mA For full scale 1440 pulses/s	356
		NPN open collector output		This terminal can be used for open collector outputs by setting **Pr.291**.	Maximum output pulse 50k pulses/s Permissible load current 80 mA	315
Analog	AM	Analog voltage output		Output item: Output frequency (initial setting)	Output signal 0 to ±10 VDC, Permissible load current 1 mA (load impedance 10 kΩ or more) Resolution 8 bits	356
	CA *2	Analog current output			Load impedance 200 Ω to 450 Ω Output signal 0 to 20 mADC	356

*1 Terminal FM is provided in the FM-type inverter.
*2 Terminal CA is provided in the CA-type inverter.

上正科技有限公司
購買、維修 此手冊零組件
電話： 037-406333
Email: service@repairtw.com
Line id: @zzzz
www.repairtw.com

(3) Communication

Type	Terminal Symbol		Terminal name	Terminal function description		Refer to page
RS-485	—		PU connector	With the PU connector, communication can be made through RS-485. (For connection on a 1:1 basis only) • Conforming standard: EIA-485 (RS-485) • Transmission format: Multidrop link • Communication speed: 4800 to 115200 bps • Overall length: 500 m		536
	RS-485 terminals	TXD+	Inverter transmission terminal	The RS-485 terminals enables the communication by RS-485. • Conforming standard: EIA-485 (RS-485) • Transmission format: Multidrop link • Communication speed: 300 to 115200 bps • Overall length: 500 m		538
		TXD-				
		RXD+	Inverter reception terminal			
		RXD-				
		SG	Earthing (grounding)			
USB	—		USB A connector	• A connector (receptacle) • A USB memory device enables parameter copies and the trace function.	• Interface: Conforms to USB1.1 (USB2.0 full-speed compatible) • Transmission speed: 12 Mbps	60
			USB B connector	• Mini B connector (receptacle) • Connected to a personal computer via USB to enable setting, monitoring, test operations of the inverter by FR Configurator2.		60

(4) Safety stop signal

上正科技有限公司
購買 維修 此手冊零組件
電話 0975460393
Email service@repairtw.com
Line id @ssz
www.repairtw.com

Terminal Symbol	Terminal name	Terminal function description	Rated specification	Refer to page
S1	Safety stop input (Channel 1)	The terminals S1 and S2 are used for the safety stop input signal for the safety relay module. The terminals S1 and S2 are used at the same time (dual channel). Inverter output is shutoff by shortening/opening between terminals S1 and SIC, or between S2 and SIC. In the initial status, terminals S1 and S2 are shorted with the terminal PC by shorting wires. The terminal SIC is shorted with the terminal SD. Remove the shorting wires and connect the safety relay module when using the safety stop function.	Input resistance 4.7 kΩ Input current 4 to 6 mADC (with 24 VDC input)	57
S2	Safety stop input (Channel 2)			
SIC	Safety stop input terminal common	Common terminal for terminals S1 and S2.	------	
SO	Safety monitor output (open collector output)	Indicates the safety stop input signal status. Switched to LOW when the status is other than the internal safety circuit failure. Switched to HIGH during the internal safety circuit failure status. (LOW is when the open collector output transistor is ON (conducted). HIGH is when the transistor is OFF (not conducted).) Refer to the Safety stop function instruction manual (BCN-A23228-001) when the signal is switched to HIGH while both terminals S1 and S2 are open. (Please contact your sales representative for the manual.)	Permissible load D24 VDC (27 VDC at maximum), 0.1 A (The voltage drop is 3.4 V at maximum while the signal is ON.) (The voltage drop is 3.4 V at maximum while the signal is ON.)	
SOC	Safety monitor output terminal common	Common terminal for terminal SO.	—	

2.6.2 Control logic (sink/source) change

Change the control logic of input signals as necessary.
To change the control logic, change the jumper connector position on the control circuit board.
Connect the jumper connector to the connector pin of the desired control logic.
The control logic of input signals is initially set to the sink logic (SINK) for the FM type.
The control logic of input signals is initially set to the source logic (SOURCE) for the CA type.
(The output signals may be used in either the sink or source logic independently of the jumper connector position.)

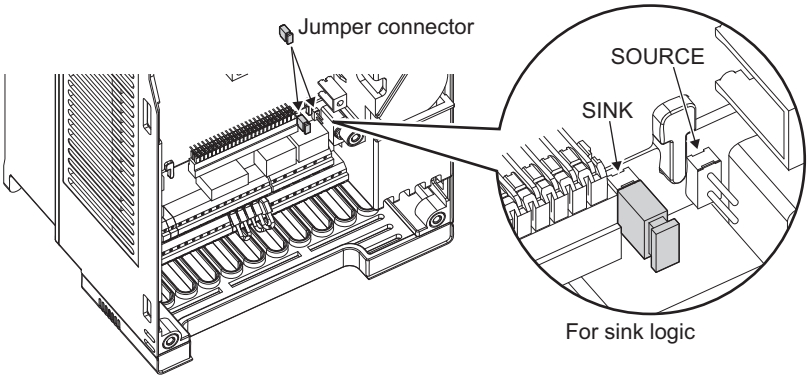

REMARKS

- Make sure that the jumper connector is installed correctly.
- Never change the control logic while power is ON.

上正科技有限公司
購買、維修 此手冊零組件
電話： 037-466333
Email: service@repairtw.com
Line id: @zzzz
www.repairtw.com

Control circuit

(1) Sink logic and source logic

- In the sink logic, a signal switches ON when a current flows from the corresponding signal input terminal. Terminal SD is common to the contact input signals. Terminal SE is common to the open collector output signals.
- In the source logic, a signal switches ON when a current flows into the corresponding signal input terminal. Terminal PC is common to the contact input signals. Terminal SE is common to the open collector output signals.

●Current flow concerning the input/output signal when sink logic is selected

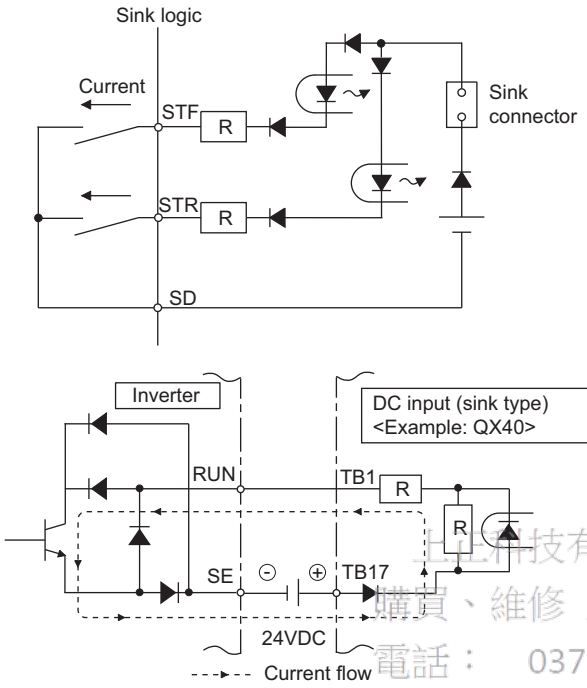

●Current flow concerning the input/output signal when source logic is selected

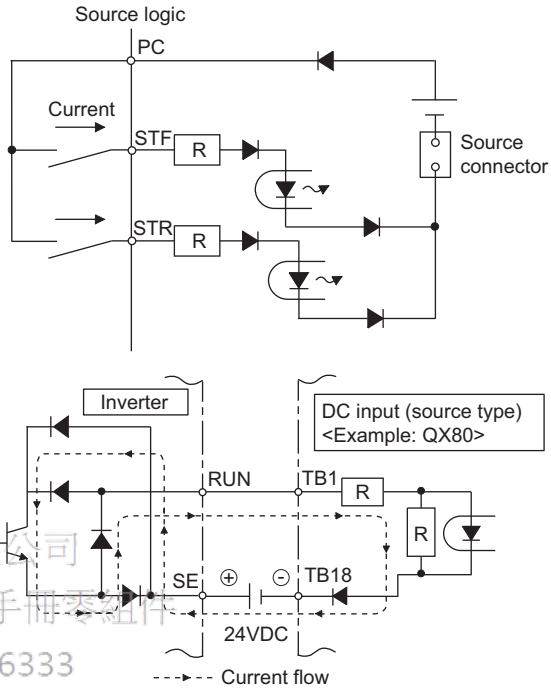

- When using an external power supply for transistor output

Sink logic	Source logic
Use the terminal PC as a common terminal, and perform wiring as shown below. (Do not connect terminal SD of the inverter with the terminal 0 V of the external power supply. When using terminals PC-SD as a 24 VDC power supply, do not install an external power supply in parallel with the inverter. Doing so may cause a malfunction in the inverter due to undesirable currents.)	Use the terminal SD as a common terminal, and perform wiring as shown below. (Do not connect terminal PC of the inverter with the terminal +24 V of the external power supply. When using terminals PC-SD as a 24 VDC power supply, do not install an external power supply in parallel with the inverter. Doing so may cause a malfunction in the inverter due to undesirable currents.)
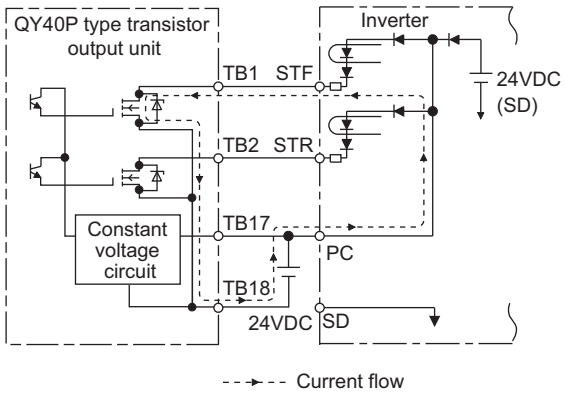	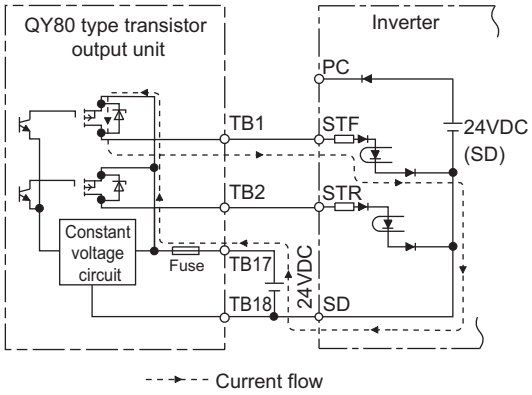

比比科技有限公司
購買、維修 此手冊零組件
電話： 037-466333
Email: service@repairtw.com
Line id: @zzz2
www.repairtw.com

2.6.3 Wiring of control circuit

(1) Control circuit terminal layout

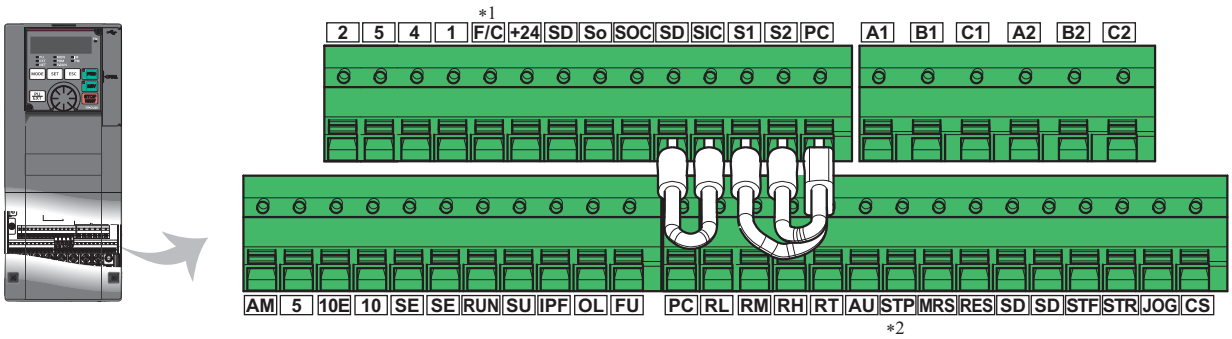

*1 This terminal operates as the terminal FM for the FM type, and as the terminal CA for the CA type.

*2 Represents the terminal STOP.

(2) Wiring method

● Power supply connection

For the control circuit wiring, strip off the sheath of a cable, and use it with a blade terminal. For a single wire, strip off the sheath of the wire and apply directly.

Insert the blade terminal or the single wire into a socket of the terminal.

1) Strip off the sheath for the below length. If the length of the sheath peeled is too long, a short circuit may occur with neighboring wires. If the length is too short, wires might come off.

Wire the stripped cable after twisting it to prevent it from becoming loose. In addition, do not solder it.

Cable stripping size



工作科技有限公司
購買 維修 此手冊零組件
電話: 037-46633
Email: service@repairtw.com
Line id: @zzzz
www.repairtw.com

2) Crimp the blade terminal.

Insert wires to a blade terminal, and check that the wires come out for about 0 to 0.5 mm from a sleeve.

Check the condition of the blade terminal after crimping. Do not use a blade terminal of which the crimping is inappropriate, or the face is damaged.

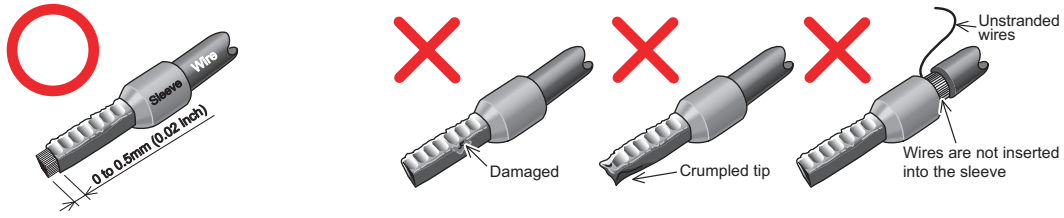

- Blade terminals commercially available (as of February 2012)

Phoenix Contact Co., Ltd.

Cable gauge (mm^2)	Blade terminal model			Crimping tool name
	With insulation sleeve	Without insulation sleeve	For UL wire*1	
0.3	AI 0,5-10WH	-	-	CRIMPFOX 6
0.5	AI 0,5-10WH	-	AI 0,5-10WH-GB	
0.75	AI 0,75-10GY	A 0,75-10	AI 0,75-10GY-GB	
1	AI 1-10RD	A 1-10	AI 1-10RD/1000GB	
1.25, 1.5	AI 1,5-10BK	A 1,5-10	AI 1,5-10BK/1000GB*2	
0.75 (for two wires)	AI-TWIN 2 × 0,75-10GY	-	-	

*1 A blade terminal with an insulation sleeve compatible with the MTW wire which has a thick wire insulation.

*2 Applicable for the terminal A1, B1, C1, A2, B2, C2.

NICHIFU Co.,Ltd.

Cable gauge (mm^2)	Blade terminal product number	Insulation product number	Crimping tool product number
0.3 to 0.75	BT 0.75-11	VC 0.75	NH 69

3) Insert the wires into a socket.

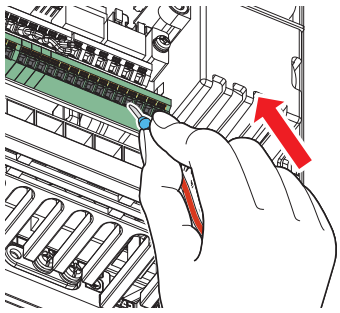

When using a single wire or stranded wires without a blade terminal, push the open/close button all the way down with a flathead screwdriver, and insert the wire.

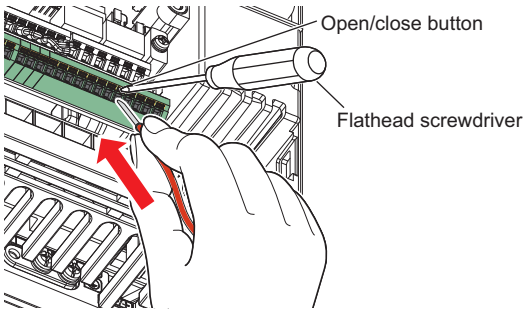

REMARKS

- When using stranded wires without a blade terminal, twist enough to avoid short circuit with a nearby terminals or wires.
- Place the flathead screwdriver vertical to the open/close button. In case the blade tip slips, it may cause an inverter damage or injury.

● Wire removal

Pull the wire while pushing the open/close button all the way down firmly with a flathead screwdriver.

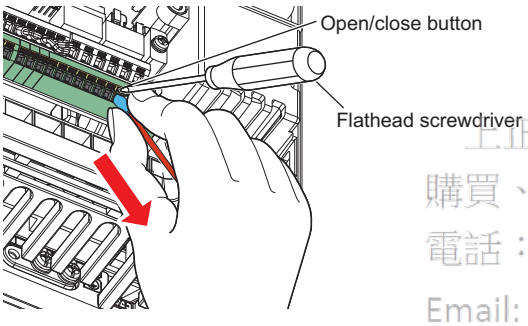

REMARKS

- Pulling out the wire forcefully without pushing the open/close button all the way down may damage the terminal block.
- Use a small flathead screwdriver (tip thickness: 0.4 mm/tip width: 2.5 mm).
  If a flathead screwdriver with a narrow tip is used, terminal block may be damaged.
  Commercially available products (as of February 2012)

Name	Model	Manufacturer
Driver	SZF 0- 0,4×2,5	Phoenix Contact Co., Ltd.

- Place the flathead screwdriver vertical to the open/close button. In case the blade tip slips, it may cause an inverter damage or injury.

上正科技有限公司
購買、維修 此手冊零組件
電話：03-3466338
Email: service@repairtw.com
Line id: @2222
www.repairtw.com

(3) Common terminals of the control circuit (SD, PC, 5, SE)

- Terminals SD (sink logic), PC (source logic), 5, and SE are common terminals (0V) for I/O signals. (All common terminals are isolated from each other.) Do not earth (ground) these terminals. Avoid connecting the terminal SD (sink logic) with 5, the terminal PC (source logic) with 5, and the terminal SE with 5.
- In the sink logic, terminal SD is a common terminal for the contact input terminals (STF, STR, STOP, RH, RM, RL, JOG, RT, MRS, RES, AU, CS) and the pulse train output terminal (FM*1). The open collector circuit is isolated from the internal control circuit by photocoupler.
- In the source logic, terminal PC is a common terminal for the contact input terminals (STF, STR, STOP, RH, RM, RL, JOG, RT, MRS, RES, AU, CS). The open collector circuit is isolated from the internal control circuit by photocoupler.
- Terminal 5 is a common terminal for the frequency setting terminals (2, 1 or 4) and the analog output terminals (AM, CA*2). It should be protected from external noise using a shielded or twisted cable.
- Terminal SE is a common terminal for the open collector output terminals (RUN, SU, OL, IPF, FU). The contact input circuit is isolated from the internal control circuit by photocoupler.

*1 Terminal FM is provided in the FM-type inverter.
*2 Terminal CA is provided in the CA-type inverter.

(4) Signal inputs by contactless switches

The contact input terminals of the inverter (STF, STR, STOP, RH, RM, RL, JOG, RT, MRS, RES, AU, CS) can be controlled using a transistor instead of a contact switch as shown below.

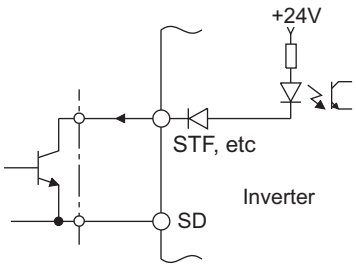

External signal input using transistor (sink logic)

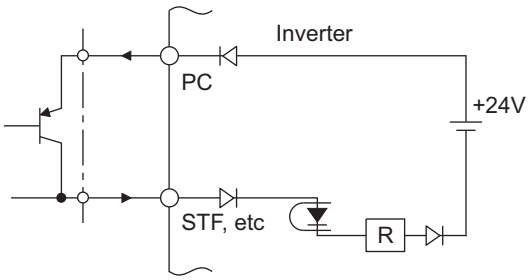

External signal input using transistor (source logic)

2.6.4 Wiring precautions

- It is recommended to use a cable of 0.75 mm^2 for the connection to the control circuit terminals.
- The wiring length should be 30 m (200 m for the terminal FM) at the maximum.
- Use two or more parallel micro-signal contacts or twin contacts to prevent contact faults when using contact inputs since the control circuit input signals are micro-currents.

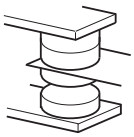

Micro signal contacts

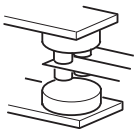

Twin contacts

- To suppress EMI, use shielded or twisted cables for the control circuit terminals and run them away from the main and power circuits (including the 200 V relay sequence circuit). For the cables connected to the control circuit terminals, connect their shields to the common terminal of the connected control circuit terminal. When connecting an external power supply to the terminal PC, however, connect the shield of the power supply cable to the negative side of the external power supply. Do not directly earth (ground) the shield to the enclosure, etc.
- Do not apply a voltage to the contact input terminals (STF, etc.) of the control circuit.
- Always apply a voltage to the fault output terminals (A1, B1, C1, A2, B2, C2) via a relay coil, lamp, etc.
- For the FR-A820-03160(55K) or higher and FR-A840-02160(75K) or higher, separate the wiring of the control circuit away from the wiring of the main circuit.
  Make cuts in rubber bush of the inverter side and lead the wires through.

Email: service@repairtw.com
Line id: @zzzz

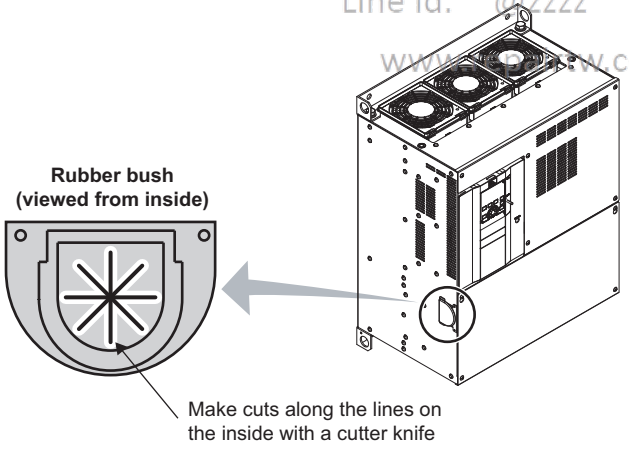

<Wiring example>

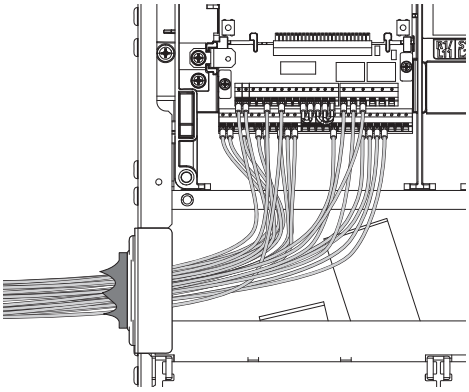

2.6.5 When using separate power supplies for the control circuit and the main circuit

<Connection diagram>

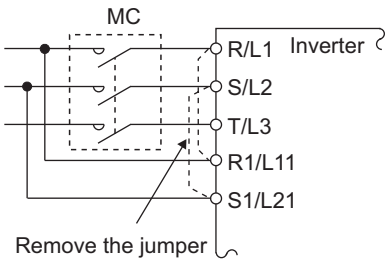

When a fault occurs, opening of the electromagnetic contactor (MC) on the inverter power supply side results in power loss in the control circuit, disabling the fault output signal retention. Terminals R1/L11 and S1/L21 are provided to hold a fault signal. In this case, connect the power supply terminals R1/L11 and S1/L21 of the control circuit to the input side of the MC.

Do not connect the power cable to incorrect terminals. Doing so may damage the inverter.

●FR-A820-00250(3.7K) or lower, FR-A840-00126(3.7K) or lower

(1) Remove the upper screws.
(2) Remove the lower screws.
(3) Remove the jumper.
(4) Connect the separate power supply cable for the control circuit to the lower terminals (R1/L11, S1/L21).

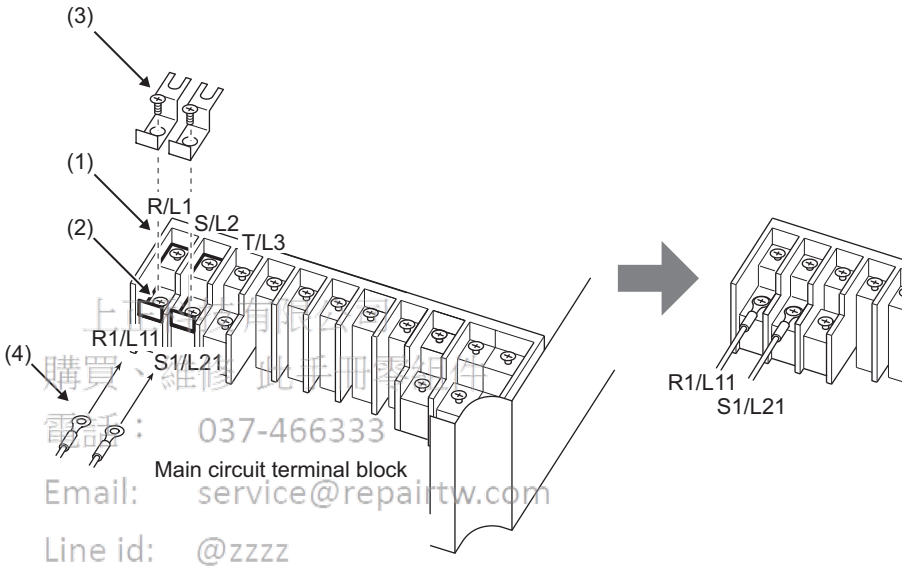

購買、維修 此手冊零組件
電話： 037-466333
Email: service@repairtw.com
Line id: @zzzz
www.repairtw.com

●FR-A820-00340(5.5K) to FR-A820-00630(11K), FR-A840-00170(5.5K) to FR-A840-00380(15K)

(1) Remove the upper screws.
(2) Remove the lower screws.
(3) Remove the jumper.
(4) Connect the separate power supply cable for the control circuit to the upper terminals (R1/L11, S1/L21).

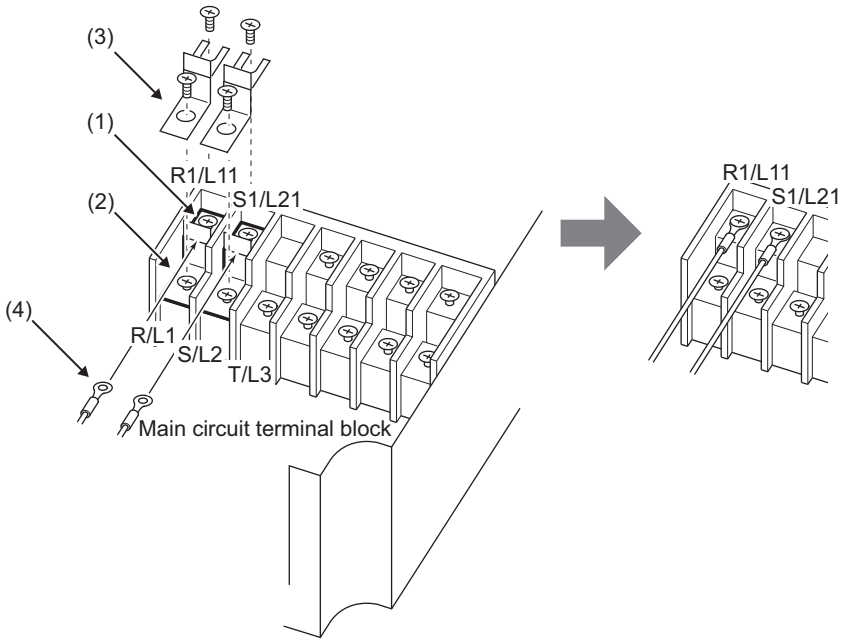

●FR-A820-00770(15K) or higher, FR-A840-00470(18.5K) or higher

(1) Remove the upper screws.
(2) Remove the lower screws.
(3) Pull the jumper toward you to remove.
(4) Connect the separate power supply cable for the control circuit to the upper terminals (R1/L11, S1/L21).

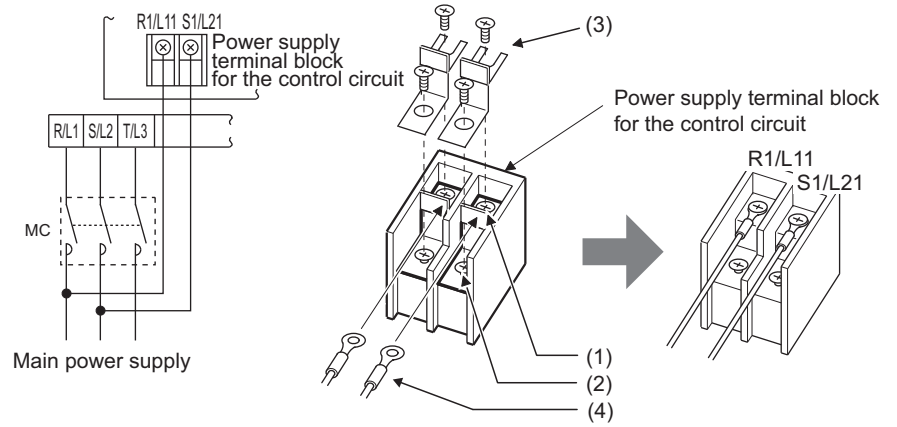

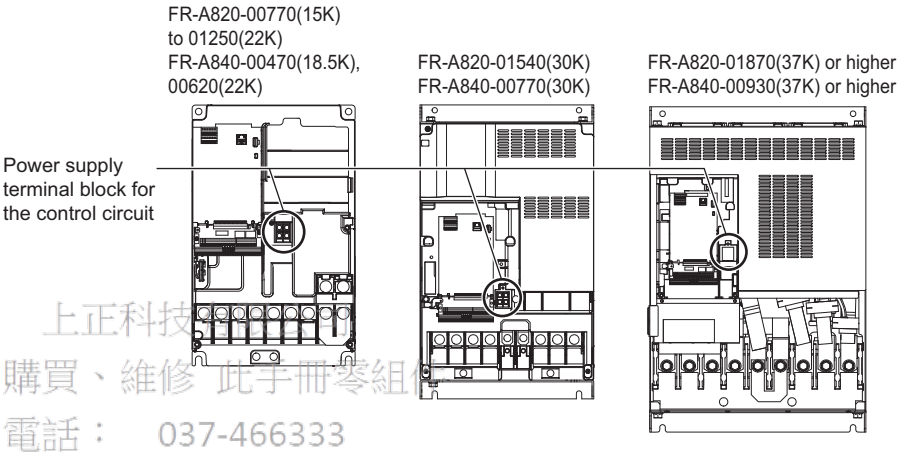

上正科技有限公司
購買、維修 此手冊零組件
電話： 037-466333
Email: service@repairtw.com
Line Id: @zzzz
www.repairtw.com

REMARKS

- When using separate power supplies, always remove the jumpers across terminals R/L1 and R1/L11 and across S/L2 and S1/L21. The inverter may be damaged if the jumpers are not removed.
- The voltage should be the same as that of the main control circuit when the control circuit power is supplied from other than the input side of the MC.
- The power capacity necessary when separate power is supplied from R1/L11 and S1/L21 differs according to the inverter capacity.

Inverter	Power supply capacity
FR-A820-00630(11K) or lower FR-A840-00380(15K) or lower	60 VA
FR-A820-00770(15K) or higher FR-A840-00470(18.5K) or higher	80 VA

- If the main circuit power is switched OFF (for 0.1 s or more) then ON again, the inverter is reset and a fault output will not be held.

2.6.6 When supplying 24 V external power to the control circuit

Connect a 24 V external power supply across terminals +24 and SD. Connecting a 24 V external power supply enables I/O terminal ON/OFF operation, operation panel displays, control functions, and communication during communication operation even at power-OFF of inverter's main circuit power supply. When the main circuit power supply is turned ON, the power supply source changes from the 24 V external power supply to the main circuit power supply.

(1) Specification of the applicable 24 V external power supply

Item	Rated specification
Input voltage	23 to 25.5 VDC
Input current	1.4 A or less

Commercially available products (as of October 2013)

Model	Manufacturer
S8JX-N05024C *1 Specifications: Capacity 50 W, output voltage (DC) 24 V, output current 2.1 A Installation method: Front installation with cover or S8VS-06024 *1 Specifications: Capacity 60W, output voltage (DC) 24 V, output current 2.5A Installation method: DIN rail installation	OMRON Corporation

*1 For the latest information about OMRON power supply, contact OMRON corporation.

上正科技有限公司
購買、維修 此手冊零組件
電話： 037-466333
Email: service@repairtw.com
Line id: @zzzz
www.repairtw.com

(2) Starting and stopping the 24 V external power supply operation

- Supplying 24 V external power while the main circuit power is OFF starts the 24 V external power supply operation. Likewise, turning OFF the main circuit power while supplying 24 V external power starts the 24 V external power supply operation.
- Turning ON the main circuit power stops the 24 V external power supply operation and enables the normal operation.

REMARKS

- When the 24 V external power is supplied while the main circuit power supply is OFF, the inverter operation is disabled.
- In the initial setting, when the main power supply is turned ON during the 24 V external power supply operation, a reset is performed in the inverter, then the power supply changes to the main circuit power supply. (The reset can be disabled using **Pr.30**. (Refer to **page 593**))

(3) Confirming the 24 V external power supply input

- During the 24 V external power supply operation, "EV" flickers on the operation panel. The alarm lamp also flickers. Thus, the 24 V external power supply operation can be confirmed even when the operation panel is removed.

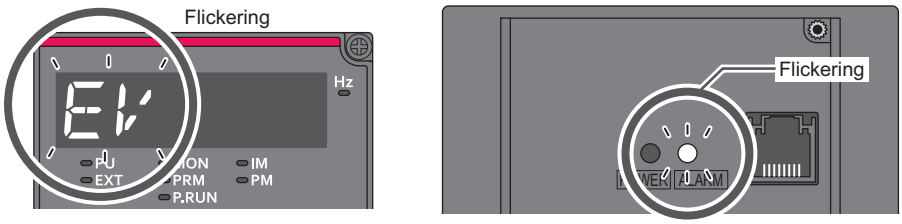

- During the 24 V external power supply operation, the 24 V external power supply operation signal (EV) is output. To use the EV signal, set "68 (positive logic) or 168 (negative logic)" in one of **Pr.190 to Pr.196 (output terminal function selection)** to assign function to an output terminal.

(4) Operation while the 24 V external power is supplied

- Faults history and parameters can be read and parameters can be written (when the parameter write from the operation panel is enabled) using the operation panel keys.
- The safety stop function is invalid during the 24 V external power supply operation.
- During the 24 V external power supply operation, monitored items and signals related to inputs to main circuit power supply, such as output current, converter output voltage, and IPF signal, are invalid.
- The faults, which have occurred when the main circuit power supply is ON, continue to be output after the power supply is changed to the 24 V external power supply. Perform the inverter reset or turn OFF then ON the power to reset the faults.
- The retry function is invalid for all faults during the 24 V external power supply.
- If the power supply changes from the main circuit power supply to the 24 V external power supply while measuring the main circuit capacitor's life, the measurement completes after the power supply changes back to the main circuit power supply (**Pr.259** = "3").
- The output data is retained when "1 or 11" is set in **Pr.495 Remote output selection**.

REMARKS

- Inrush current equal to or higher than the 24 V external power supply specification may flow at power-ON. Confirm that the power supply and other devices are not affected by the inrush current and the voltage drop caused by it. Depending on the power supply, the inrush current protection may be activated to disable the power supply. Select the power supply and capacity carefully.
- When the wiring length between the external power supply and the inverter is long, the voltage often drops. Select the appropriate wiring size and length to keep the voltage in the rated input voltage range.
- In a serial connection of several inverters, the current increases when it flows through the inverter wiring near the power supply. The increase of the current causes voltage to drop further. When connecting different inverters to different power supplies, use the inverters after confirming that the input voltage of each inverter is within the rated input voltage range. Depending on the power supply, the inrush current protection may be activated to disable the power supply. Select the power supply and capacity carefully.
- "E.SAF or E.P24" may appear when the start-up time of the 24 V power supply is too long (less than 1.5 V/s) in the 24 V external power supply operation.
- "E.P24" may appear when the 24 V external power supply input voltage is low. Check the external power supply input.
- Do not touch the control circuit terminal block (circuit board) during the 24 V power supply operation (when conducted). Otherwise you may get an electric shock or burn.

上正科技有限公司
購買、維修此手冊零組件
電話： 037-466333
Email: service@repairtw.com
www.repairtw.com

2.6.7 Safety stop function

(1) Function description

The terminals related to the safety stop function are shown below.

Terminal symbol	Terminal function description	
S1 *1	For input of the safety stop channel 1.	Between S1 and SIC, S2 and SIC Open: In safety stop mode Short: Other than the safety stop mode.
S2 *1	For input of the safety stop channel 2.	
SIC *1	Common terminal for S1 and S2.	
SO	Outputs when an alarm or failure is detected. The signal is output when no internal safety circuit failure*2 exists.	OFF: Internal safety circuit failure*2 ON: No internal safety circuit failure*2
SOC	Open collector output (terminal SO) common	

*1 In the initial status, terminals S1 and PC, S2 and PC, and SIC and SD are respectively shorted with shorting wires. To use the safety stop function, remove all the shortening wires, and then connect to the safety relay module as shown in the following connection diagram.

*2 At an internal safety circuit failure, the operation panel displays one of the faults shown on the next page.

REMARKS

- Use the terminal SO to output a fault and to prevent restarting of the inverter. The signal cannot be used as safety stop input terminal to other devices.

(2) Connection diagram

To prevent automatic restart after a fault occurrence, connect the reset button of a safety relay module or a safety programmable controller across the terminals SO and SOC. The reset button acts as the feedback input for the safety relay module or the safety programmable controller.

Pr.178="60 (initial value)"
Pr.179="25"

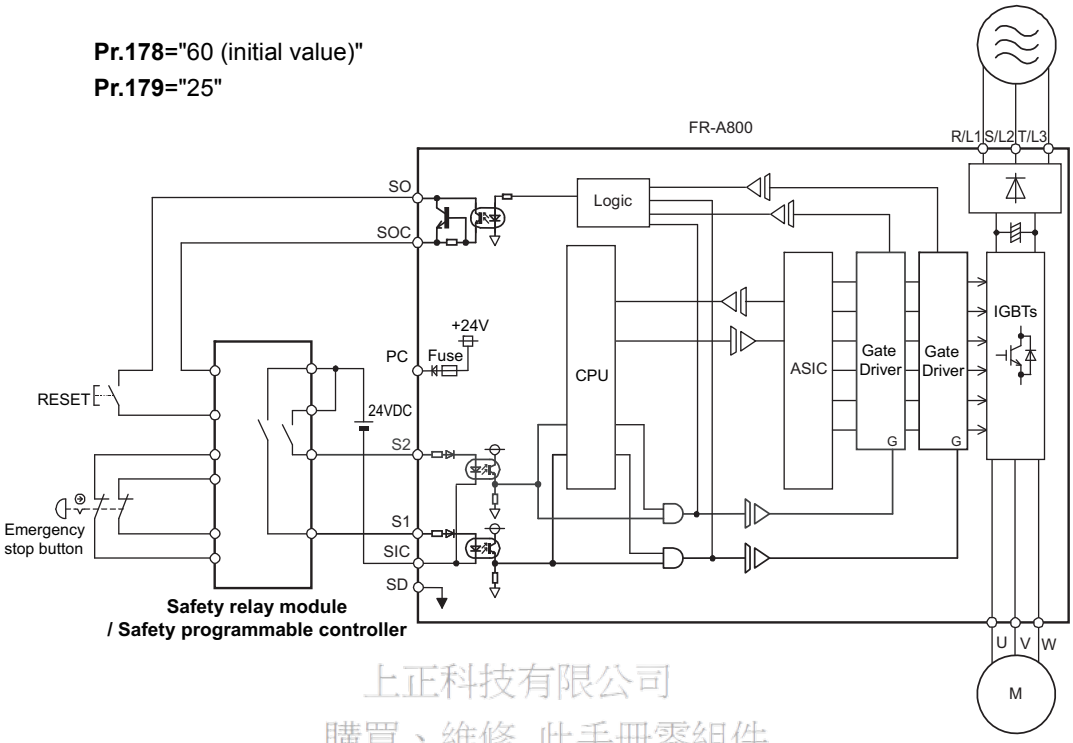

上正科技有限公司
購買、維修 此手冊零組件
電話： 037-466333
Email: service@repairtw.com
Line id: @zzz
www.repairtw.com

(3) Safety stop function operation

Input power	Input signal S1-SIC	Input signal S2-SIC	Internal safety circuit failure *1	Output signal SO *3	Inverter running status
OFF	-	-	-	OFF	Output shutoff (Safe state)
ON	Short	Short	Without	ON	Drive enabled
			With	OFF	Output shutoff (Safe state)
	Open	Open	Without *2	ON	Output shutoff (Safe state)
			With	OFF	Output shutoff (Safe state)
	Short	Open	N/A	OFF	Output shutoff (Safe state)
	Open	Short	N/A	OFF	Output shutoff (Safe state)

N/A denotes a condition where circuit fault does not apply.

*1 At an internal safety circuit failure, the operation panel displays one of the faults shown in (4).
*2 SA is displayed when both of the S1 and S2 signals are in open status and no internal safety circuit failure exists.
*3 ON: Transistor used for an open collector output is conducted.
OFF: Transistor used for an open collector output is not conducted.

(4) Internal safety circuit failure

At an internal safety circuit failure, the terminal SO turns OFF.
The following faults can cause the internal safety circuit failure (terminal SO - OFF).

Fault record	Operation panel indication
Option fault	E.OPT
Communication option fault	E.OP1
Parameter storage device fault	E.PE
Retry count excess	E.RET
Parameter storage device fault	E.PE2
Operation panel power supply short circuit RS-485 terminals power supply short circuit	E.CTE
24 VDC power fault	E.P24
Safety circuit fault	E.SAF

Fault record	Operation panel indication
Overspeed occurrence	E.OS
Speed deviation excess detection	E.OSD
Signal loss detection	E.ECT
Excessive position fault	E.OD
Brake sequence fault	E.MB1 to E.MB7
Encoder phase fault	E.EP
CPU fault	E.CPU
	E.5 to E.7
Internal circuit fault	E.13

For more details, refer to the Safety stop function instruction manual (BCN-A23228-001). (Find a PDF copy of this manual in the CD-ROM enclosed with the product.

2.7 Communication connectors and terminals

2.7.1 PU connector

(1) Mounting the operation panel (FR-DU08) or parameter unit (FR-PU07) on the enclosure surface

- Having an operation panel (FR-DU08) or a parameter unit (FR-PU07) on the enclosure surface is convenient. With a connection cable, the operation panel (FR-DU08) or the parameter unit (FR-PU07) can be mounted to the enclosure surface and connected to the inverter.
  Use the option FR-CB2[ ], or connectors and cables available on the market.
  (To mount the operation panel (FR-DU08), the optional connector (FR-ADP) is required.)
  Securely insert one end of the connection cable until the stoppers are fixed.

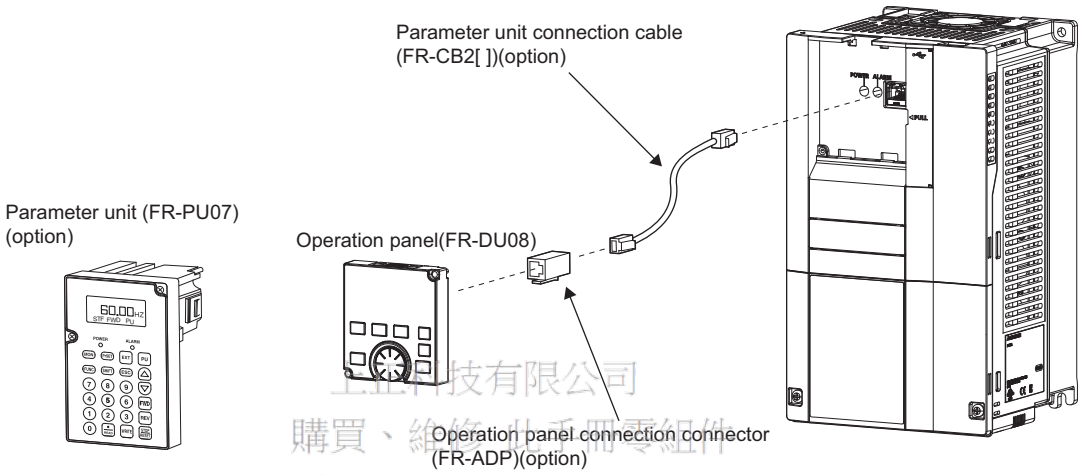

上正科技有限公司
購買、維修 此手冊零組件
電話： 037-466333
Email: service@repairtw.com
Line id: @zzzz
www.repairtw.com

REMARKS

- Refer to the following table when fabricating the cable on the user side. Keep the total cable length within 20 m.
- Commercially available products (as of February 2012)

Name	Model	Manufacturer
Communication cable	SGLPEV-T (Cat5e/300 m) 24AWG × 4P	Mitsubishi Cable Industries, Ltd.
RJ-45 connector	5-554720-3	Tyco Electronics

(2) Communication operation

- Using the PU connector enables communication operation from a personal computer, etc. When the PU connector is connected with a personal, FA or other computer by a communication cable, a user program can run to monitor the inverter or read and write parameters.
  Communication can be performed with the Mitsubishi inverter protocol (computer link operation).
  For the details, refer to page 536.

2.7.2 USB connector

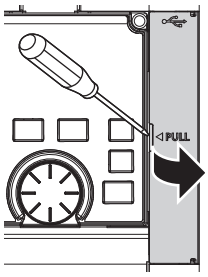

Place a flathead screwdriver, etc. in a slot and push up the cover to open.

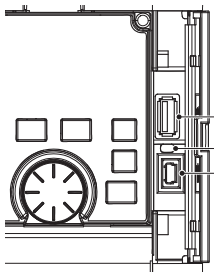

(1) USB host communication

Interface		Conforms to USB1.1
Transmission speed		12 Mbps
Wiring length		Maximum 5 m
Connector		USB A connector (receptacle)
Compatible USB memory	**Format**	FAT32
	Capacity	1 GB or more (used in the recorder mode of the trace function)
	Encryption function	Not available

- Different inverter data can be saved in a USB memory device.
  The USB host communication enables the following functions.

Function	Description	Refer to page
Parameter copy	• Copies the parameter setting from the inverter to the USB memory device. A maximum of 99 parameter setting files can be saved in a USB memory device. • The parameter setting data copied in the USB memory device can be copied to other inverters. This function is useful in backing up the parameter setting or for sharing the parameter setting among multiple inverters. • The parameter setting file can be copied onto a personal computer from the USB memory device and edited using FR Configurator2.	612
Trace	• The monitored data and output status of the signals can be saved in a USB memory device. • The saved data can be imported to FR Configurator2 to diagnose the operating status of the inverter.	529
PLC function data copy	• This function copies the PLC function project data to a USB memory device when the PLC function is used. • The PLC function project data copied in the USB memory device can be copied to other inverters. • This function is useful in backing up the parameter setting and for allowing multiple inverters to operate by the same sequence programs.	527

上正科技有限公司
購買、維修 此手冊零組件
電話： 037-466333
Email: service@repairtw.com
Line id: @7777
www.repairtw.com

- When the inverter recognizes the USB memory device without any problem, USb.-A is briefly displayed on the operation panel.
- When the USB memory device is removed, USb.- is briefly displayed on the operation panel.
- The operating status of the USB host can be checked on the LED display of the inverter.

LED display status	Operating status
OFF	No USB connection.
ON	The communication is established between the inverter and the USB device.
Flickering rapidly	The USB memory device is being accessed. (Do not remove the USB memory device.)
Flickering slowly	Error in the USB connection.

- When a device such as a USB battery charger is connected to the USB connector and an excessive current (500 mA or more) flows, USB host error UF (UF warning) is displayed on the operation panel.
- When the UF warning appears, the USB error can be canceled by removing the USB device and setting **Pr.1049** = "1". (The UF warning can also be canceled by resetting the inverter power or resetting with the RES signal.)

REMARKS

- Do not connect devices other than a USB memory device to the inverter.
- If a USB device is connected to the inverter via a USB hub, the inverter cannot recognize the USB memory device properly.

(2) USB device communication

The inverter can be connected to a personal computer with a USB (Ver. 1.1) cable.
Parameter setting and monitoring can be performed by FR Configurator2.

Interface	Conforms to USB1.1
Transmission speed	12 Mbps
Wiring length	Maximum 5 m
Connector	USB mini B connector (receptacle)
Power supply	Self-powered

REMARKS

- For the details of FR Configurator2, refer to the Instruction Manual of FR Configurator2.

2.7.3 RS-485 terminal block

(1) Communication operation

Conforming standard	EIA-485 (RS-485)
Transmission format	Multidrop link
Communication speed	maximum 115200 bps
Overall length	500 m
Connection cable	Twisted pair cable (4 pairs)

上正科技有限公司
購買、維修 此主此零組件
電話： 037-466333
Email: service@repairtw.com
Line id: @zzzz
www.repairtw.com

The RS-485 terminals enable communication operation from a personal computer, etc. When the PU connector is connected with a personal, FA or other computer by a communication cable, a user program can run to monitor the inverter or read and write parameters.
Communication can be performed with the Mitsubishi inverter protocol (computer link operation) and Modbus-RTU protocol.
For the details, refer to page 538.

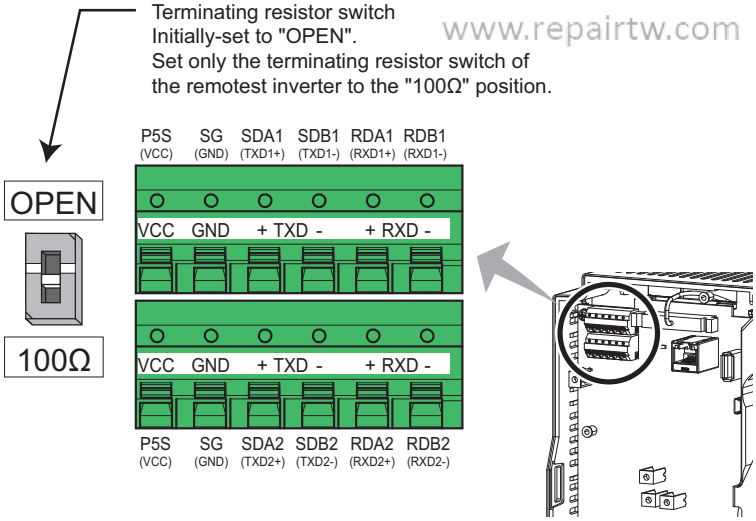

2.8 Connection of motor with encoder (vector control)

Using an encoder-equipped motor together with the plug-in option FR-A8AP enables speed, torque, and positioning control operations under orientation control, encoder feedback control, and full-scale vector control.

(1) Appearance and parts name of FR-A8AP

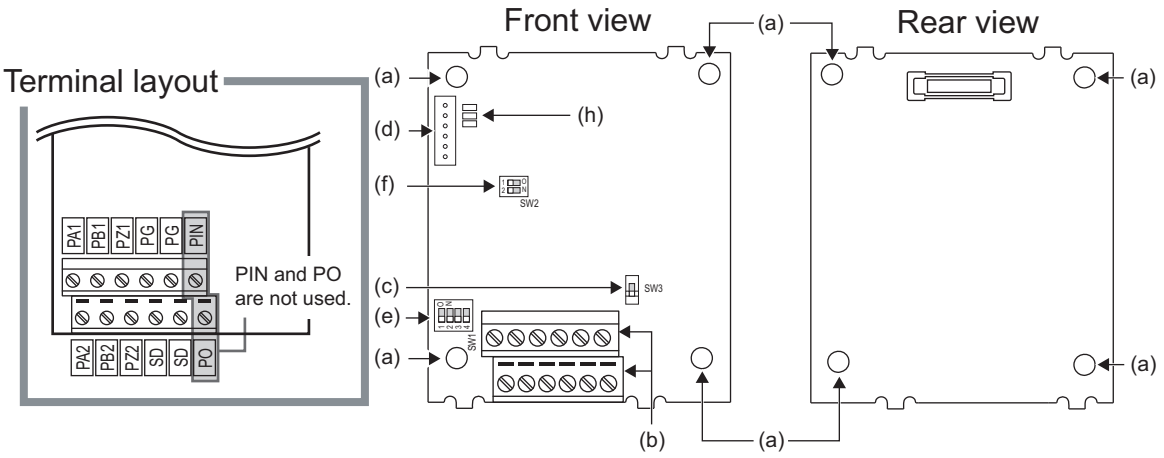

Symbol	Name	Description	Refer to page
a	Mounting hole	Used for installation to the inverter.	—
b	Terminal block	Connected with the encoder.	65
c	Encoder type selection switch (SW3)	Switches the encoder type (differential line driver/complementary).	63
d	CON2 connector	Not used.	—
e	Terminating resistor selection switch (SW1)	Switches ON or OFF the internal terminating resistor.	63
f	Switch for manufacturer setting (SW2)	Do not change from the initially-set status. (Switches 1 and 2 are OFF .)	—
g	Connector	Connected to the option connector of the inverter.	14
h	LED for manufacturer check	Not used.	—

上正科技有限公司
購買、維修 此手冊零組件
電話： 037-466333
Email: service@repairtw.com
Line id: @zzzz
www.repairtw.com

(2) Terminals of the FR-A8AP

Terminal symbol	Terminal name	Description
PA1	Encoder A-phase signal input terminal	A-, B- and Z-phase signals are input from the encoder.
PA2	Encoder A-phase inverse signal input terminal	
PB1	Encoder B-phase signal input terminal	
PB2	Encoder B-phase inverse signal input terminal	
PZ1	Encoder Z-phase signal input terminal	
PZ2	Encoder Z-phase inverse signal input terminal	
PG	Encoder power supply (positive side) input terminal	Input terminal for the encoder power supply. Connect the external power supply (5 V, 12 V, 15 V, 24 V) and the encoder power cable. When the encoder output is the differential line driver type, only 5 V can be input. Make the voltage of the external power supply same as the encoder output voltage. (Check the encoder specification.)
SD	Encoder power supply ground terminal	
PIN	Not used.	
PO		

REMARKS

- When the encoder's output voltage differs from its input power supply voltage, the signal loss detection (E.ECT) may occur.
- Incorrect wiring or faulty setting to the encoder will cause a fault such as an overcurrent (E.OC[ ]) and an inverter overload (E.THT). Correctly perform the encoder wiring and setting.

(3) Switches of the FR-A8AP

- Encoder type selection switch (SW3)
  Selects either the differential line driver or complementary setting.
  It is initially set to the differential line driver. Switch its position according to the output circuit.

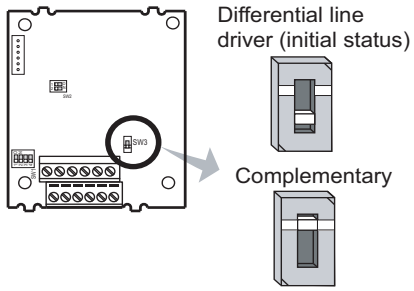

- Terminating resistor selection switch (SW1)
  Selects ON/OFF of the internal terminating resistor.
  Set the switch to ON (initial status) when an encoder output type is differential line driver, and set to OFF when complementary.
  ON: with internal terminating resistor (initial status)
  OFF: without internal terminating resistor

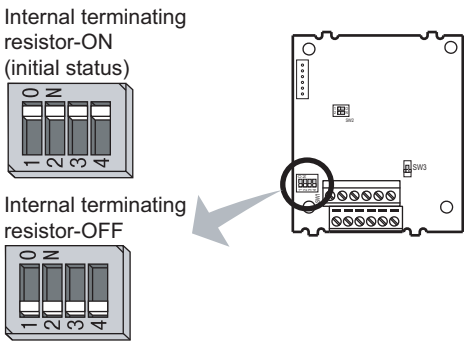

REMARKS

- Set all switches to the same setting (ON/OFF).
- Set the switch "OFF" when sharing an encoder with another unit (NC (computerized numerical controller), etc.) having a terminating resistor under the differential line driver setting.

- Motor and switch setting

上正科技有限公司
購買、維修 此手冊零組件
電話： 037-466333
Email: service@repairtw.com
Line id: @zzzz
www.repairtw.com

Motor		Encoder type selection switch (SW3)	Terminating resistor selection switch (SW1)	Power supply specification*2
Mitsubishi standard motor with encoder Mitsubishi high-efficiency motor with encoder	SF-JR	Differential	ON	5 V
	SF-HR	Differential	ON	5 V
	Other	*1	*1	*1
Mitsubishi constant-torque motor with encoder	SF-JRCA	Differential	ON	5 V
	SF-HRCA	Differential	ON	5 V
	Other	*1	*1	*1
Vector control dedicated motor	SF-V5RU	Complementary	OFF	12 V
Other manufacturer's motor with encoder		*1	*1	*1

*1 Set according to the motor (encoder).

*2 Prepare an encoder's power supply (5 V/12 V/15 V/24 V) according to the encoder's output voltage. When the encoder output is the differential line driver type, only 5 V can be input.

REMARKS

- The SW2 switch is for manufacturer setting. Do not change the setting.

- Encoder specification

Item	Encoder for SF-JR	Encoder for SF-V5RU
Resolution	1024 pulses/rev	2048 pulses/rev
Power supply voltage	5 VDC ±10%	12 VDC ±10%
Current consumption	150 mA	150 mA
Output signal form	A, B phases (90° phase shift) Z phase: 1 pulse/rev	A, B phases (90° phase shift) Z phase: 1 pulse/rev
Output circuit	Differential line driver 74LS113 equivalent	Complementary
Output voltage	H level: 2.4 V or more L level: 0.5 V or less	H level: (Power supply for encoder-3 V) or more L level: 3 V or less

Connection of motor with encoder (vector control)

(4) Encoder cable

SF-JR/HR/JRCA/HRCA with encoder

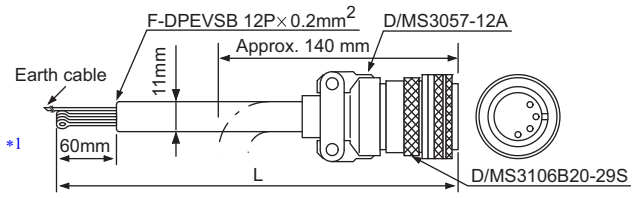

Model	Length L (m)
FR-JCBL5	5
FR-JCBL15	15
FR-JCBL30	30

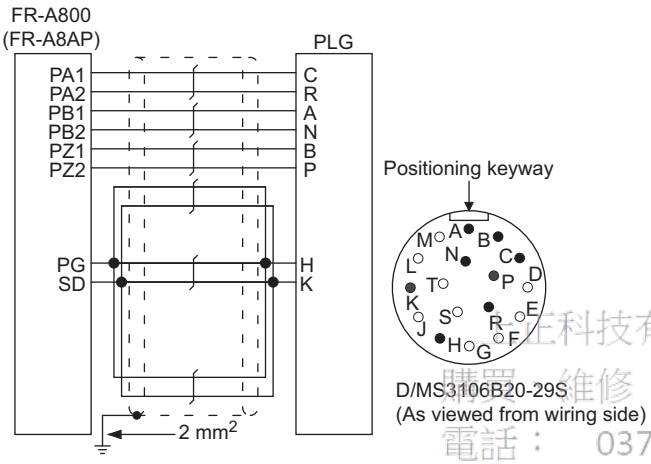

SF-V5RU, SF-THY

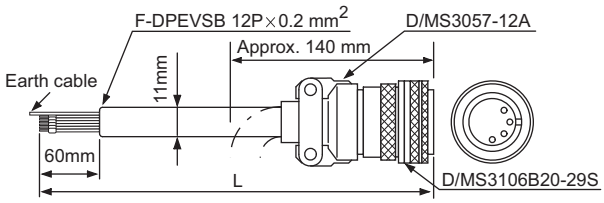

- A P clip for earthing (grounding) a shielded cable is provided.

Model	Length L (m)
FR-V7CBL5	5
FR-V7CBL15	15
FR-V7CBL30	30

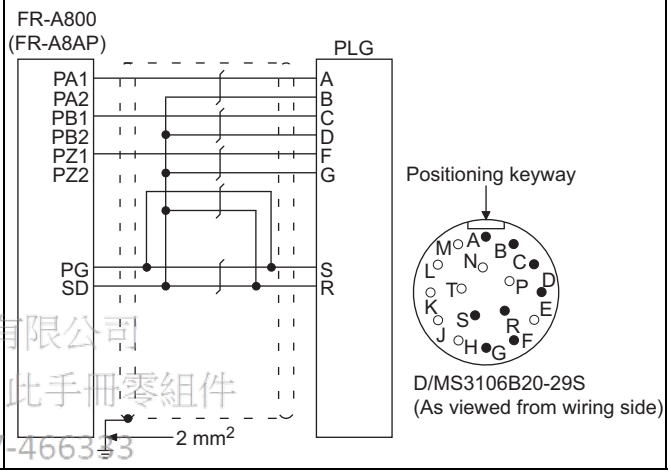

*1 As the terminal block of the FR-A8AP is an insertion type, cables need to be treated. (Refer to the following description.)

正科技有限公司
購買 維修 此手冊零組件
電話： 037-466333
Email: service@repairtw.com
Line id: @zzz
www.repairtw.com

- When using an encoder cable (FR-JCBL, FR-V5CBL, etc.) dedicated to the conventional motor, cut the crimping terminal of the encoder cable and strip its sheath to make its cable wires loose.
  Also, treat the shielding wires of the shielded twisted pair cable to ensure that they will not contact conductive areas.
  Wire the stripped cable after twisting it to prevent it from becoming loose. In addition, do not solder it.



REMARKS

Information on blade terminals

Commercially available products (as of February 2012)

- Phoenix Contact Co., Ltd.

Terminal screw size	Cable gauge (mm^2)	Blade terminal model		Crimping tool name
		With insulation sleeve	Without insulation sleeve	
M2	0.3, 0.5	AI 0,5-6WH	A 0,5-6	CRIMPFOX 6

- NICHIFU Co.,Ltd.

Terminal screw size	Cable gauge (mm^2)	Blade terminal product number	Insulation product number	Crimping tool product number
M2	0.3 to 0.75	BT 0.75-7	VC 0.75	NH 69

When using a blade terminal (without insulation sleeve), take caution that the twisted wires do not come out.

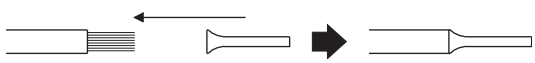

- Connection terminal compatibility table

Motor		SF-V5RU, SF-THY	SF-JR/HR/JRCA/HRCA (with encoder)
Encoder cable		FR-V7CBL	FR-JCBL
FR-A8AP terminal	PA1	PA	PA
	PA2	Do not connect anything to this.	PAR
	PB1	PB	PB
	PB2	Do not connect anything to this.	PBR
	PZ1	PZ	PZ
	PZ2	Do not connect anything to this.	PZR
	PG	PG	5E
	SD	SD	AG2

(5) Wiring example

- Speed control

Standard motor with encoder (SF-JR), 5 V differential line driver	Vector control dedicated motor (SF-V5RU, SF-THY), 12 V complementary
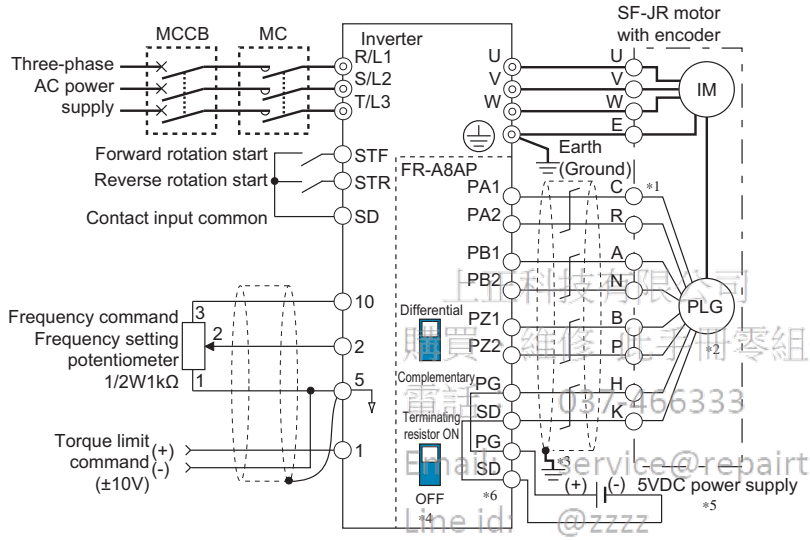	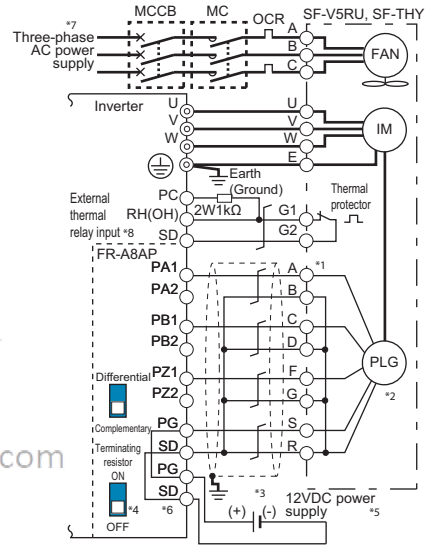

上正科技有限公司
購買、維修 此手冊零組件
電話 037-466333
Email: service@repairtw.com
Line id: @zzzz
www.repairtw.com

- Torque control

Standard motor with encoder (SF-JR), 5 V differential line driver	Vector control dedicated motor (SF-V5RU, SF-THY), 12 V complementary
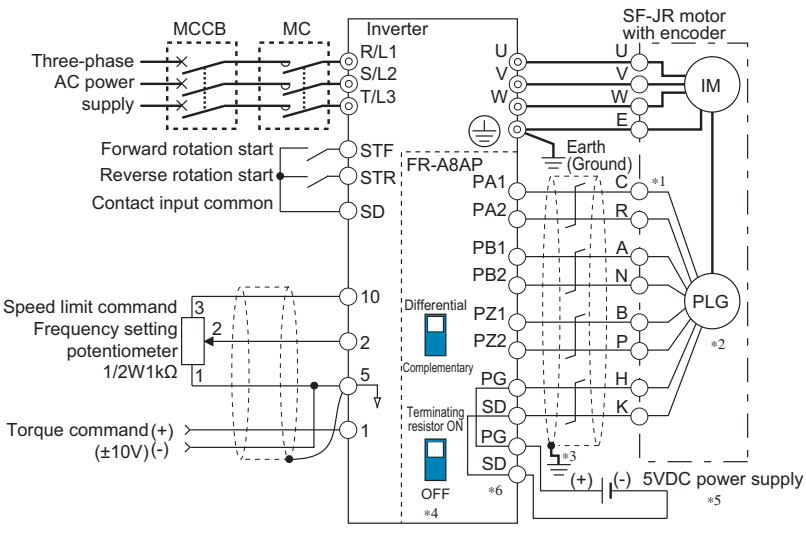	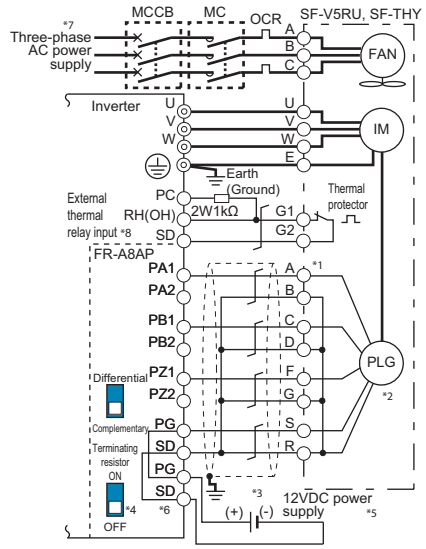

Connection of motor with encoder (vector control)

- Position control

Vector control dedicated motor (SF-V5RU, SF-THY), 12 V complementary

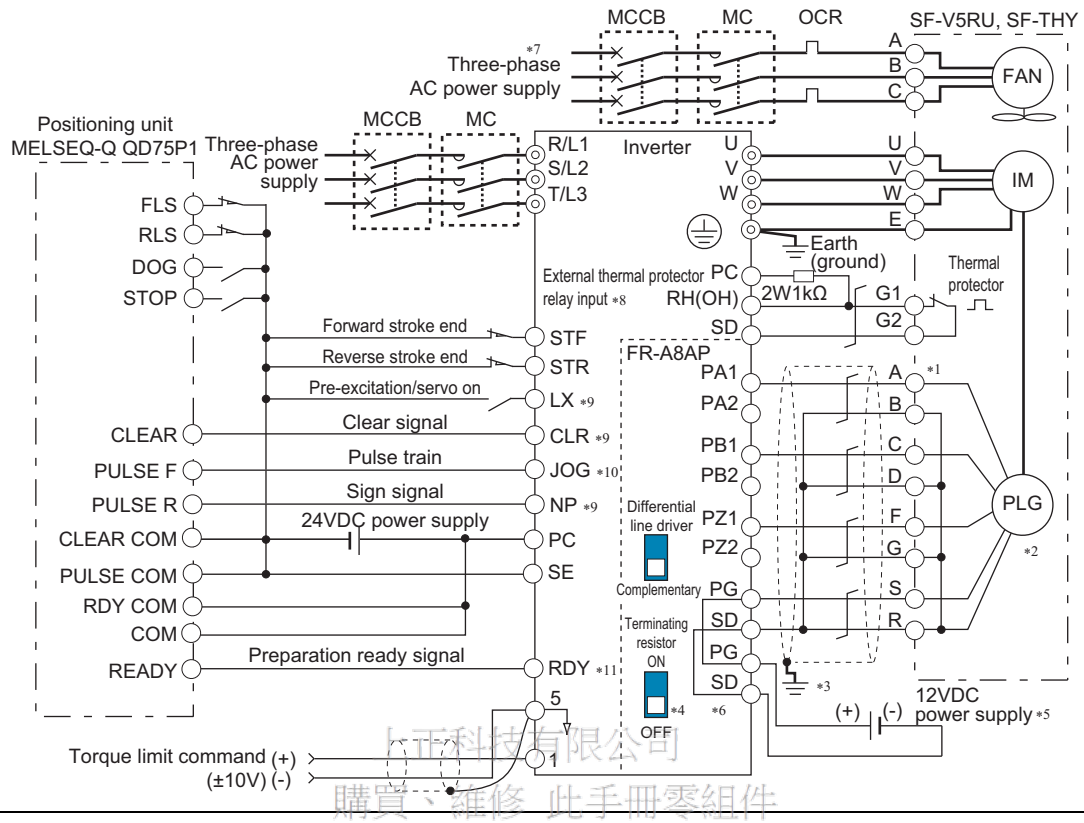

上正科技有限公司
購買、維修 此手冊零組件
電話： 037-466333
Email: service@repairtw.com
Line id: @zzzz
www.repairtw.com

*1 The pin number differs according to the encoder used.
Speed, control, torque control, and position control by pulse train input are available with or without the Z-phase being connected.

*2 Connect the encoder so that there is no looseness between the motor and motor shaft. Speed ratio must be 1:1.

*3 Earth (ground) the shield of the encoder cable to the enclosure using a tool such as a P-clip. (Refer to **page 67**.)

*4 For the complementary, set the terminating resistor selection switch to OFF position. (Refer to **page 63**.)

*5 A separate power supply of 5 V/12 V/15 V/24 V is necessary according to the encoder power specification.
When the encoder output is the differential line driver type, only 5 V can be input.
Make the voltage of the external power supply the same as the encoder output voltage, and connect the external power supply across PG and SD.

*6 For terminal compatibility of the FR-JCBL, FR-V7CBL, and FR-A8AP, refer to **page 65**.

*7 For the fan of the 7.5 kW or lower dedicated motor, the power supply is single phase. (200 V/50 Hz, 200 to 230 V/60 Hz)

*8 Connect the recommended 2W1kΩ resistor between the terminal PC and OH. (Recommended product: MOS2C102J 2W1kΩ by KOA Corporation)
Insert the input line and the resistor to a 2-wire blade terminal, and connect the blade terminal to the terminal OH. (For the recommended 2-wire blade terminals, refer to **page 51**.)
Insulate the lead wire of the resistor, for example by applying a contraction tube, and shape the wires so that the resistor and its lead wire will not touch other cables. Caulk the lead wire securely together with the thermal protector input line using a 2-wire blade terminal. (Do not subject the lead wire's bottom area to an excessive pressure.)
To use a terminal as the terminal OH, assign the OH (external thermal O/L relay input) signal to an input terminal. (Set "7" in any of **Pr.178 to Pr.189**. For details, refer to **page 416**.)

When OH signal is assigned to terminal RH
(**Pr.182** = "7")

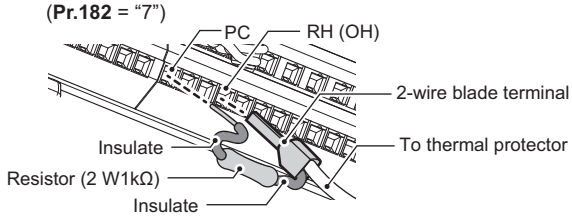

*9 Assign the function using **Pr.178 to Pr.184, Pr.187 to Pr.189 (input terminal function selection)**.

*10 When position control is selected, terminal JOG function is invalid and simple position pulse train input terminal becomes valid.

*11 Assign the function using **Pr.190 to Pr.194 (output terminal function selection)**.

(6) Instructions for encoder cable wiring

- Use shielded twisted pair cables (0.2 mm^2 or larger) to connect the FR-A8AP. For the wiring to the terminals PG and SD, use several cables in parallel or use a thick cable, according to the wiring length.
  To protect the cables from noise, run them away from any source of noise (such as the main circuit and power supply voltage).

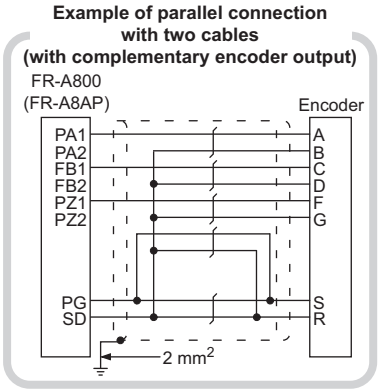

Wiring length	Parallel connection		Larger-size cable
Within 10 m	At least two cables in parallel	Cable gauge 0.2 mm^2	0.4 mm^2 or larger
Within 20 m	At least four cables in parallel		0.75 mm^2 or larger
Within 100 m*	At least six cables in parallel		1.25 mm^2 or larger

* When differential line driver is set and a wiring length is 30 m or more.
  The wiring length can be extended to 100 m by increasing the 5 V power supply (approximately to 5.5 V) while using six or more 0.2 mm^2 gauge cables in parallel or a 1.25 mm^2 or larger gauge cable. The voltage applied must be within power supply specifications of encoder.

- To reduce noise of the encoder cable, earth (ground) the encoder's shielded cable to the enclosure (as close as possible to the inverter) with a P-clip or U-clip made of metal.

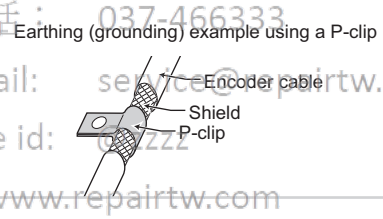

正亞科技有限公司
購買、維修 此手冊零組件
電話： 037-466333
Email: service@repairtw.com
Line id: @zzz
www.repairtw.com

- When one encoder is shared between FR-A8AP and CNC (computerized numerical controller), its output signal should be connected as shown below. In this case, the wiring length between FR-A8AP and CNC should be as short as possible, within 5 m.

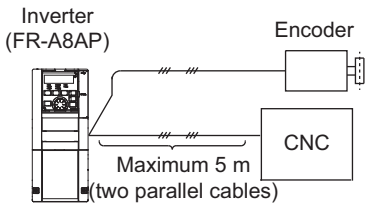

REMARKS

- For the details of the optional encoder dedicated cable (FR-JCBL/FR-V7CBL), refer to page 64.
- The FR-V7CBL is provided with a P-clip for earthing (grounding) shielded cables.

Connection of motor with encoder (vector control)

(7) Parameter for the encoder (**Pr.359, Pr.369**)

Pr.	Name	Initial value	Setting range	Description	
359 C141	Encoder rotation direction	1	0	Set when using a motor for which forward rotation (encoder) is clockwise (CW) viewed from the shaft 	Set for the operation at 120 Hz or less.
			100		Set for the operation at a frequency higher than 120 Hz.
			1	Set when using a motor for which forward rotation (encoder) is counterclockwise (CCW) viewed from the shaft 	Set for the operation at 120 Hz or less.
			101		Set for the operation at a frequency higher than 120 Hz.
369 C140	Number of encoder pulses	1024	0 to 4096	Set the number of encoder pulses output. Set the number of pulses before it is multiplied by 4.	

∗ The above parameters can be set when the FR-A8AP (option) is mounted.

(8) Parameter settings for the motor under vector control

- Values in ▭ indicate initial values.

Motor name		Pr.9 Electronic thermal O/L relay	Pr.71 Applied motor	Pr.80 Motor capacity	Pr.81 Number of motor poles	Pr.359 Encoder rotation direction	Pr.369 Number of encoder pulses
Mitsubishi standard motor	SF-JR	Rated motor current	0	Motor capacity	Number of motor poles	1	1024
	SF-JR 4P 1.5 kW or lower	Rated motor current	20	Motor capacity	4	1	1024
	SF-HR	Rated motor current	40	Motor capacity	Number of motor poles	1	1024
	Others	Rated motor current	0(3) ∗1	Motor capacity	Number of motor poles	∗2	∗2
Mitsubishi constant-torque motor	SF-JRCA 4P	Rated motor current	1	Motor capacity	4	1	1024
	SF-HRCA	Rated motor current	50	Motor capacity	Number of motor poles	1	1024
	Others	Rated motor current	1(13) ∗1	Motor capacity	Number of motor poles	∗2	∗2
Vector control dedicated motor	SF-V5RU (1500 r/min series)	0 ∗3	30	Motor capacity	4	1	2048
	SF-V5RU (except for 1500 r/min series)	0 ∗3	1(13) ∗1	Motor capacity	4	1	2048
	SF-THY	0 ∗3	30(33) ∗1	Motor capacity	4	1	2048
Other manufacturer's standard motor	—	Rated motor current	0(3) ∗1	Motor capacity	Number of motor poles	∗2	∗2
Other manufacturer's constant-torque motor	—	Rated motor current	1(13) ∗1	Motor capacity	Number of motor poles	∗2	∗2

∗1 Offline auto tuning is required (Refer to page 428.)
∗2 Set this parameter according to the motor.
∗3 Use the thermal protector input provided with the motor.

上正科技有限公司
購買、維修 此手冊零組件
電話： 037-466333
Email: service@repairtw.com
Line id: @zzzz
www.repairtw.com

- When using the inverter with the SF-V5RU (1500 r/min series), refer to the table below to set **Pr.83 Rated motor voltage** and **Pr.84 Rated motor frequency**. For the setting of the SF-V5RU1, 3, and 4, refer to page 428.

Motor capacity	SF-V5RU			
	200 V		400 V	
	Pr.83 (V)	Pr.84 (Hz)	Pr.83 (V)	Pr.84 (Hz)
1.5 kW	188	52	345	52
2.2 kW	188	52	360	52
3.7 kW	190	52	363	52
5.5 kW	165	51	322	51
7.5 kW	164	51	331	51
11 kW	171	51	320	51
15 kW	164	51	330	51

Motor capacity	SF-V5RU			
	200 V		400 V	
	Pr.83 (V)	Pr.84 (Hz)	Pr.83 (V)	Pr.84 (Hz)
18.5 kW	171	51	346	51
22 kW	160	51	336	51
30 kW	178	51	328	51
37 kW	166	51	332	51
45 kW	171	51	342	51
55 kW	159	51	317	51

- When using the inverter with the SF-V5RU1, SF-V5RU3, or SF-V5RU4, refer to the table below to set **Pr.83 Rated motor voltage** and **Pr.84 Rated motor frequency**.

Motor model	Pr.83 setting		Pr.84 setting
	200 V class	400 V class	
SF-V5RU1-30kW or lower	160 V	320 V	33.33 Hz
SF-V5RU1-37kW	170 V	340 V	
SF-V5RU3-22kW or lower	160 V	320 V	
SF-V5RU3-30kW	170 V	340 V	
SF-V5RU4-3.7kW and 7.5kW	150 V	300 V	16.67 Hz
SF-V5RU4 and motors other than described above	160 V	320 V	

上正科技有限公司
購買、維修 此手冊零組件
電話： 037-466333
Email: service@repairtw.com
Line id: @zzzz
www.repairtw.com

(9) Combination with the vector control dedicated motor

When using the inverter with a vector control dedicated motor, refer to the table below.

- Combination with the SF-V5RU and SF-THY

Voltage	200 V class			400 V class		
Rated speed	1500 r/min					
Base frequency	50 Hz					
Maximum speed	3000 r/min					
Motor capacity	Motor frame number	Motor model	Inverter model FR-A820-[]	Motor frame number	Motor model	Inverter model FR-A840-[]
1.5 kW	90L	SF-V5RU1K	00167(2.2K)	90L	SF-V5RUH1K	00083(2.2K)
2.2 kW	100L	SF-V5RU2K	00250(3.7K)	100L	SF-V5RUH2K	00083(2.2K)
3.7 kW	112M	SF-V5RU3K	00340(5.5K)	112M	SF-V5RUH3K	00126(3.7K)
5.5 kW	132S	SF-V5RU5K	00490(7.5K)	132S	SF-V5RUH5K	00250(7.5K)
7.5 kW	132M	SF-V5RU7K	00630(11K)	132M	SF-V5RUH7K	00310(11K)
11 kW	160M	SF-V5RU11K	00770(15K)	160M	SF-V5RUH11K	00380(15K)
15 kW	160L	SF-V5RU15K	00930(18.5K)	160L	SF-V5RUH15K	00470(18.5K)
18.5 kW	180M	SF-V5RU18K	01250(22K)	180M	SF-V5RUH18K	00620(22K)
22 kW	180M	SF-V5RU22K	01540(30K)	180M	SF-V5RUH22K	00770(30K)
30 kW	200L*2	SF-V5RU30K	01870(37K)	200L*2	SF-V5RUH30K	00930(37K)
37 kW	200L*2	SF-V5RU37K	02330(45K)	200L*2	SF-V5RUH37K	01160(45K)
45 kW	200L*2	SF-V5RU45K	03160(55K)	200L*2	SF-V5RUH45K	01800(55K)
55 kW	225S*1	SF-V5RU55K	03800(75K)	225S*1	SF-V5RUH55K	02160(75K)
75 kW	250MD	SF-THY	04750(90K)	250MD	SF-THY	02600(90K)
90 kW	—	—	—	250MD	SF-THY	03250(110K)
110 kW	—	—	—	280MD	SF-THY	03610(132K)
132 kW	—	—	—	280MD	SF-THY	04320(160K)
160 kW	—	—	—	280MD	SF-THY	04810(185K)
200 kW	—	—	—	280L	SF-THY	05470(220K)
250 kW	—	—	—	315H	SF-THY	06830(280K)

Connection of motor with encoder (vector control)

- Combination with the SF-V5RU1, 3, 4, and SF-THY

	SF-V5RU[ ]1 (1:2)			SF-V5RU[ ]3 (1:3)			SF-V5RU[ ]4 (1:4)		
Voltage	200 V class								
Rated speed	1000 r/min			1000 r/min			500 r/min		
Base frequency	33.33 Hz			33.33 Hz			16.6 Hz		
Maximum speed	2000 r/min			3000 r/min			2000 r/min		
Motor capacity	**Motor frame number**	**Motor model**	**Inverter model FR-A820-[]**	**Motor frame number**	**Motor model**	**Inverter model FR-A820-[]**	**Motor frame number**	**Motor model**	**Inverter model FR-A820-[]**
1.5 kW	100L	SF-V5RU1K1 (Y)	00167(2.2K)	112M	SF-V5RU1K3 (Y)	00167(2.2K)	132M	SF-V5RU1K4 (Y)	00167(2.2K)
2.2 kW	112M	SF-V5RU2K1 (Y)	00250(3.7K)	132S	SF-V5RU2K3 (Y)	00250(3.7K)	160M	SF-V5RU2K4 (Y)	00250(3.7K)
3.7 kW	132S	SF-V5RU3K1 (Y)	00340(5.5K)	132M	SF-V5RU3K3 (Y)	00340(5.5K)	160L	SF-V5RU3K4	00340(5.5K)*4
5.5 kW	132M	SF-V5RU5K1 (Y)	00490(7.5K)	160M	SF-V5RU5K3 (Y)	00490(7.5K)	180L	SF-V5RU5K4 (Y)	00490(7.5K)
7.5 kW	160M	SF-V5RU7K1 (Y)	00630(11K)	160L	SF-V5RU7K3 (Y)	00630(11K)	200L	SF-V5RU7K4 (Y)	00630(11K)
11 kW	160L	SF-V5RU11K1 (Y)	00770(15K)	180M	SF-V5RU11K3 (Y)	00770(15K)	225S	SF-V5RU11K4 (Y)	00770(15K)
15 kW	180M	SF-V5RU15K1 (Y)	00930(18.5K)	180L	SF-V5RU15K3 (Y)	00930(18.5K)	225S	SF-V5RU15K4	00930(18.5K)*4
18.5 kW	180L	SF-V5RU18K1 (Y)	01250(22K)	200L	SF-V5RU18K3 (Y)	01250(22K)	250MD	SF-THY	01250(22K)
22 kW	200L	SF-V5RU22K1 (Y)	01540(30K)	200L	SF-V5RU22K3 (Y)	01540(30K)	280MD	SF-THY	01540(30K)
30 kW	200L*3	SF-V5RU30K1 (Y)	01870(37K)	225S*1	SF-V5RU30K3 (Y)	01870(37K)	280MD	SF-THY	01870(37K)
37 kW	225S	SF-V5RU37K1 (Y)	02330(45K)	250MD*1	SF-THY	02330(45K)	280MD	SF-THY	02330(45K)
45 kW	250MD	SF-THY	03160(55K)	250MD*1	SF-THY	03160(55K)	280MD	SF-THY	03160(55K)
55 kW	250MD	SF-THY	03800(75K)	280MD*1	SF-THY	03800(75K)	280L	SF-THY	03800(75K)

Models surrounded by black borders and 400 V class are developed upon receipt of order.

*1 The maximum speed is 2400 r/min.

*2 80% output in the high-speed range. (The output is reduced when the speed is 2400 r/min or faster.)

*3 90% output in the high-speed range. (The output is reduced when the speed is 1000 r/min or faster.)

*4 For motors with overload capacity 150% 60 s ("Y" at the end of their model names), contact your sales representative.

上正科技有限公司
購買、維修 此手冊零組件
電話： 037-466333
Email: service@repairtw.com
Line id: @zzzz
www.repairtw.com

2.9 Connection of stand-alone option units

The inverter accepts a variety of stand-alone option units as required.
Incorrect connection will cause inverter damage or accident. Connect and operate the option unit carefully in accordance with the corresponding option unit manual.

2.9.1 Connection of the dedicated external brake resistor (FR-ABR)

For FR-A820-00490(7.5K) or lower and FR-A840-00250(7.5K) or lower, the plug-in brake resistor is connected across terminals P/+ and PX.
When the plug-in brake resistor does not have enough thermal capability for high-duty operation, install an external dedicated brake resistor (FR-ABR). At this time, remove the jumper from across terminals PR and PX and connect the FR-ABR across terminals P/+ and PR. (For the locations of terminal P/+ and PR, refer to the terminal block layout (page 38).)
Removing jumpers across terminals PR and PX disables the plug-in brake resistor (power is not supplied). The plug-in brake resistor can be left connected to the inverter, and so is the plug-in brake resistor's lead wire connected to the terminal.
The FR-ABR can be applicable to FR-A820-01250(22K) or lower and FR-A840-00620(22K) or lower.
Set parameters as below.

- **Pr.30 Regenerative function selection** = "1"
- **Pr.70 Special regenerative brake duty** = "7.5K or lower: 10%, 11K or higher: 6%"

(Refer to page 593.)

上下科技有限公司
購買、維修 此手冊零組件
電話： 037-466333
Email: service@repairtw.com
@zzzz
www.repairtw.com

FR-A820-00046(0.4K), FR-A820-00077(0.75K)

1) Remove the screws in terminals PR and PX and remove the jumper.

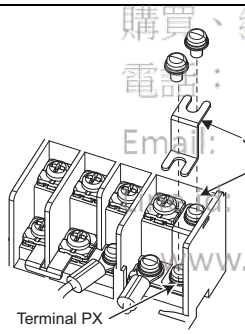

2) Connect the brake resistor across terminals P/+ and PR. (The jumper should remain disconnected.)

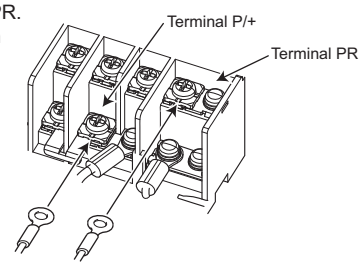

FR-A820-00105(1.5K) to FR-A820-00250(3.7K), FR-A840-00023(0.4K) to FR-A840-00126(3.7K)

1) Remove the screws in terminals PR and PX and remove the jumper.

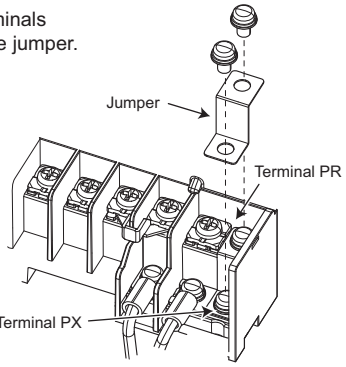

2) Connect the brake resistor across terminals P/+ and PR. (The jumper should remain disconnected.)

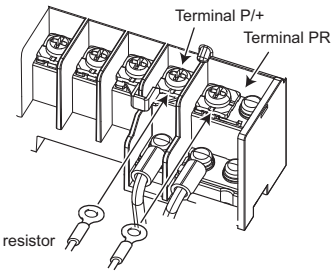

FR-A820-00340(5.5K), FR-A820-00490(7.5K), FR-A840-00170(5.5K), FR-A840-00250(7.5K)

1) Remove the screws in terminals PR and PX and remove the jumper.

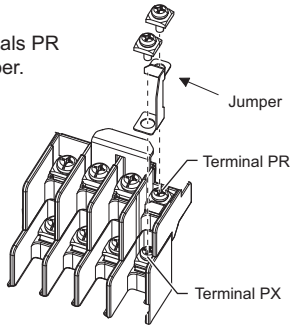

2) Connect the brake resistor across terminals P/+ and PR. (The jumper should remain disconnected.)

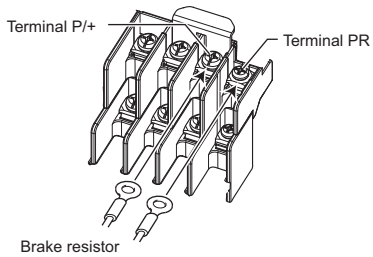

Connection of stand-alone option units

FR-A820-00630(11K), FR-A840-00310(11K), FR-A840-00380(15K)	FR-A820-00770(15K) to FR-A820-01250(22K), FR-A840-00470(18.5K), FR-A840-00620(22K)
Connect the brake resistor across terminals P/+ and PR. 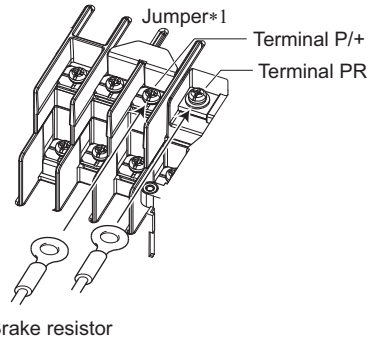 	Connect the brake resistor across terminals P3 and PR. 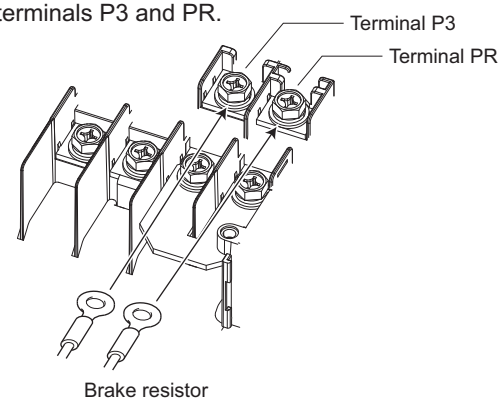

∗1 Do not remove the jumper across terminals P/+ and P1 except when connecting a DC reactor (FR-HEL).

- When the regenerative brake transistor is damaged, the following sequence is recommended to prevent overheat and burnout of the brake resistor.

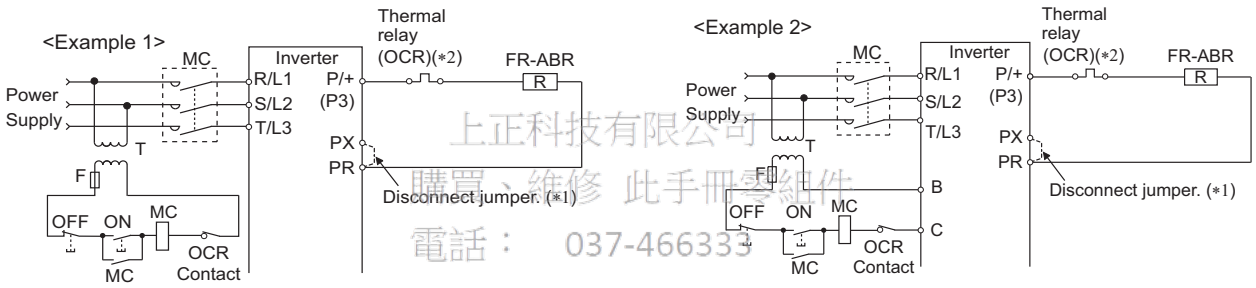

上正科技有限公司
購買、維修 此手冊零組件
電話： 037-466333
Email: service@repairtw.com
Line id: @zzzz
www.repairtw.com

∗2 Since the FR-A820-00630(11K) or higher and FR-A840-00310(11K) or higher are not provided with the PX terminal, a jumper need not to be removed.

∗3 Refer to the table below for the thermal relay types for each capacity. Refer to the diagram below for the connection. Always install a thermal relay when using a brake resistor whose capacity is 11K or higher.

Power supply voltage	High-duty brake resistor brake resistor	Thermal relay type (Mitsubishi product)	Contact rating
200 V	FR-ABR-0.4K	TH-N20CXHZ-0.7A	110 VAC 5A, 220 VAC 2A (AC11 class) 110 VDC 0.5A, 220 VDC 0.25A (DC11 class)
	FR-ABR-0.75K	TH-N20CXHZ-1.3A	
	FR-ABR-2.2K	TH-N20CXHZ-2.1A	
	FR-ABR-3.7K	TH-N20CXHZ-3.6A	
	FR-ABR-5.5K	TH-N20CXHZ-5A	
	FR-ABR-7.5K	TH-N20CXHZ-6.6A	
	FR-ABR-11K	TH-N20CXHZ-11A	
	FR-ABR-15K	TH-N20CXHZ-11A	
	FR-ABR-22K	TH-N60-22A	
400 V	FR-ABR-H0.4K	TH-N20CXHZ-0.24A	
	FR-ABR-H0.75K	TH-N20CXHZ-0.35A	
	FR-ABR-H1.5K	TH-N20CXHZ-0.9A	
	FR-ABR-H2.2K	TH-N20CXHZ-1.3A	
	FR-ABR-H3.7K	TH-N20CXHZ-2.1A	
	FR-ABR-H5.5K	TH-N20CXHZ-2.5A	
	FR-ABR-H7.5K	TH-N20CXHZ-3.6A	
	FR-ABR-H11K	TH-N20CXHZ-6.6A	
	FR-ABR-H15K	TH-N20CXHZ-6.6A	
	FR-ABR-H22K	TH-N20-9A	

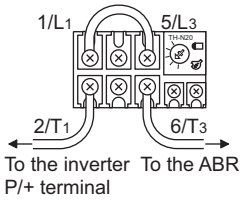

REMARKS

- Always use the dedicated brake resistor.
- For FR-A820-00490(7.5K) or lower and FR-A840-00250(7.5K) or lower, the jumper across terminals PR and PX must be disconnected before connecting the dedicated brake resistor. Doing so may damage the inverter.
- A brake resistor cannot be used with options such as brake units, high power factor converters, and power regeneration converters.
- For the use of a brake resistor other than FR-ABR, contact your sales representative.

2.9.2 Connection of the brake unit (FR-BU2)

Connect the brake unit (FR-BU2(H)) as shown below to improve the braking capability during deceleration.

(1) Connection example with the GRZG type discharging resistor

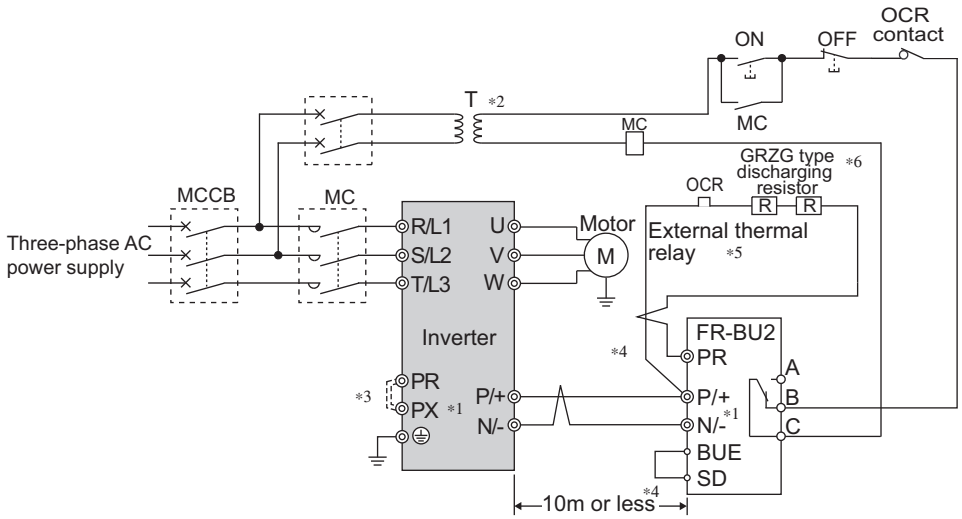

*1 When wiring, make sure to match the terminal symbol (P/+, N/-) at the inverter side and at the brake unit (FR-BU2) side. (Incorrect connection will damage the inverter and brake unit.)

*2 When the power supply is 400 V class, install a stepdown transformer.

*3 Be sure to remove the jumper across terminals PR and PX when using the FR-BU2 with the inverter of FR-A820-00490(7.5K) or lower, FR-A840-00250(7.5K) or lower.

*4 The wiring distance between the inverter and brake unit (FR-BU2), and between the brake unit (FR-BU2) and discharging resistor must be within 5 m. Even when the wires are twisted, the cable length must be within 10 m.

*5 It is recommended to install an external thermal relay to prevent overheat of the discharging resistor.

*6 For the connection method of the discharging resistor, refer to the Instruction Manual of the FR-BU2.

上正科技有限公司
購買、維修 此手冊零組件
電話： 037-466333
Email: service@repairtw.com
Line id: @zzzz
www.repairtw.com

- Recommended external thermal relay

Brake unit	Discharging resistor	Recommended external thermal relay
FR-BU2-1.5K	GZG 300W-50Ω (one)	TH-N20CXHZ 1.3A
FR-BU2-3.7K	GRZG 200-10Ω (three in series)	TH-N20CXHZ 3.6A
FR-BU2-7.5K	GRZG 300-5Ω (four in series)	TH-N20CXHZ 6.6A
FR-BU2-15K	GRZG 400-2Ω (six in series)	TH-N20CXHZ 11A
FR-BU2-H7.5K	GRZG 200-10Ω (six in series)	TH-N20CXHZ 3.6A
FR-BU2-H15K	GRZG 300-5Ω (eight in series)	TH-N20CXHZ 6.6A
FR-BU2-H30K	GRZG 400-2Ω (twelve in series)	TH-N20CXHZ 11A

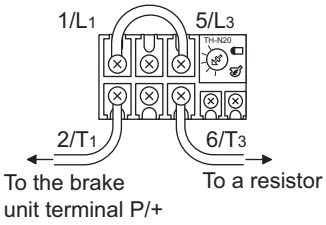

REMARKS

- Set "1" in **Pr.0 Brake mode selection** of the FR-BU2 to use a GRZG type discharging resistor.
- Do not remove the jumper across terminals P/+ and P1 except when connecting a DC reactor (FR-HEL).

(2) Connection example with the FR-BR-(H) resistor unit

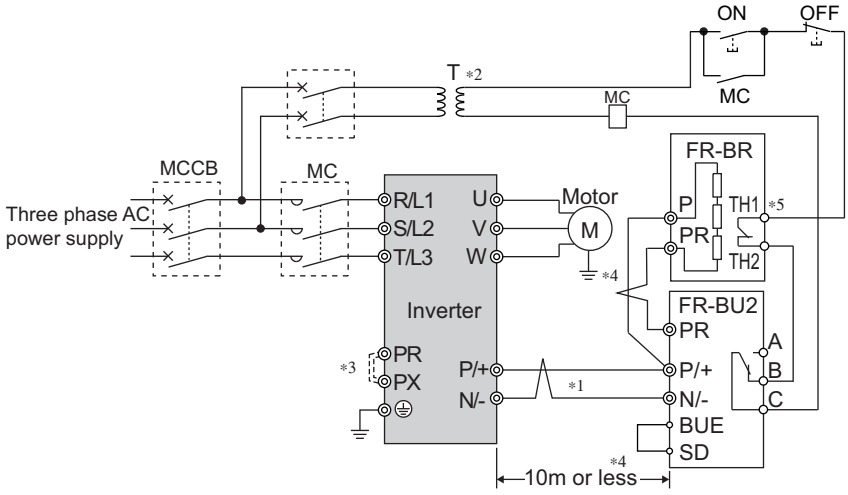

*1 When wiring, make sure to match the terminal symbol (P/+, N/-) at the inverter side and at the brake unit (FR-BU2) side. (Incorrect connection will damage the inverter and brake unit.)

*2 When the power supply is 400 V class, install a stepdown transformer.

*3 Be sure to remove the jumper across terminals PR and PX when using the FR-BU2 with the inverter of FR-A820-00490(7.5K), FR-A840-00250(7.5K) or lower.

*4 The wiring distance between the inverter and brake unit (FR-BU2), and between the brake unit (FR-BU2) and resistor unit (FR-BR) must be within 5 m. Even when the wire is twisted, the cable length must be within 10 m.

*5 The contact between TH1 and TH2 is closed in the normal status and is open at a fault.

上正科技有限公司
購買、維修 此手冊零組件
電話： 037-466333
Email: service@repairtw.com
Line id: @zzzz
www.repairtw.com

REMARKS

- Do not remove the jumper across terminals P/+ and P1 except when connecting a DC reactor (FR-HEL).

(3) Connection example with the MT-BR5 type resistor unit

After wiring securely, set **Pr.30 Regenerative function selection** = "1" and **Pr.70 Special regenerative brake duty** = "0 (initial value)".
Set **Pr.0 Brake mode selection** = "2" in the brake unit FR-BU2.

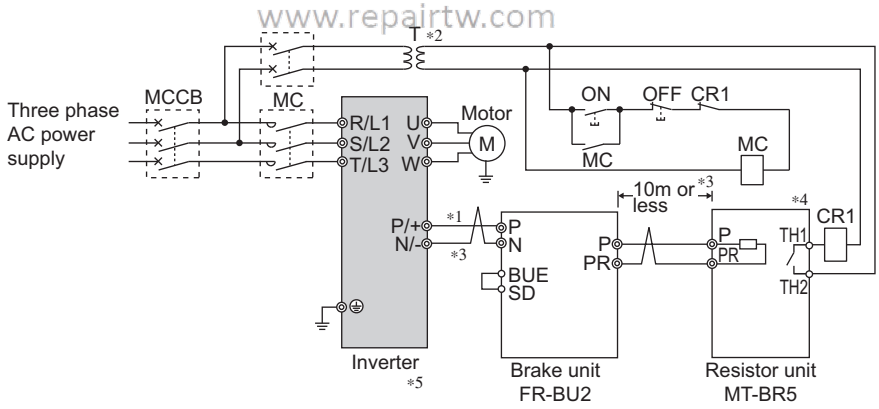

*1 When wiring, make sure to match the terminal symbol (P/+, N/-) at the inverter side and at the brake unit (FR-BU2) side. (Incorrect connection will damage the inverter and brake unit.)

*2 When the power supply is 400 V class, install a stepdown transformer.

*3 The wiring distance between the inverter and brake unit (FR-BU2), and between the brake unit (FR-BU2) and resistor unit (MT-BR5) must be within 5 m. Even when the wire is twisted, the cable length must be within 10 m.

*4 The contact between TH1 and TH2 is open in the normal status and is closed at a fault.

*5 The CN8 connector used with the MT-BU5 type brake unit is not used.

REMARKS

- The stall prevention (overvoltage), oL, does not occur while **Pr.30 Regenerative function selection** = "1" and **Pr.70 Special regenerative brake duty** = "0% (initial value)." (Refer to page 593.)

2.9.3 Connection of the brake unit (FR-BU)

Connect the brake unit (FR-BU2(H)) as shown below to improve the braking capability during deceleration.
The FR-BU is compatible with FR-A820-03160(55K) or lower and FR-A840-01800(55K) and lower.

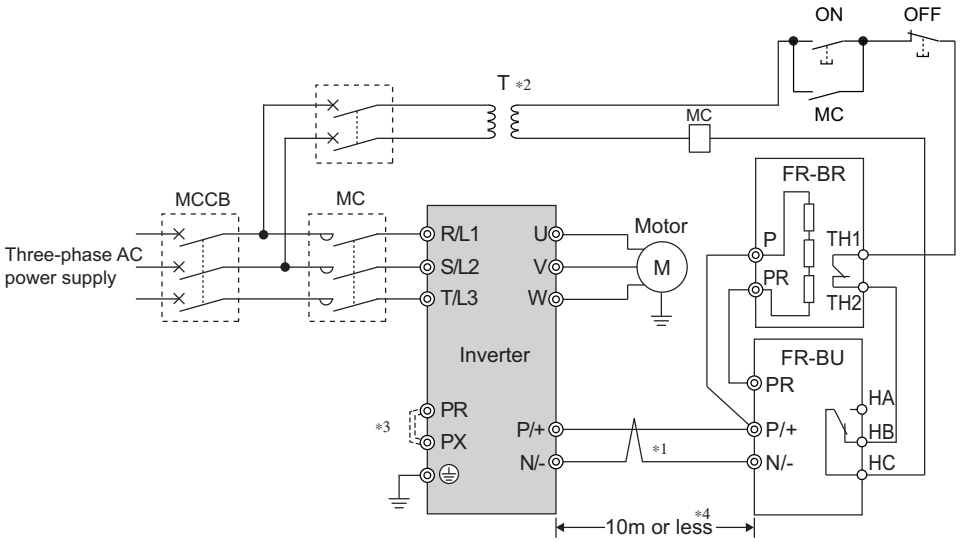

*1 When wiring, make sure to match the terminal symbol (P/+, N/-) at the inverter side and at the brake unit (FR-BU(H)) side. (Incorrect connection will damage the inverter.)
*2 When the power supply is 400 V class, install a stepdown transformer.
*3 For the FR-A820-00490(7.5K) or lower and FR-A840-00250(7.5K) or lower, be sure to remove the jumper across terminals PR and PX.
*4 The wiring distance between the inverter and brake unit (FR-BU2), and between the brake unit (FR-BU2) and discharging resistor must be within 5 m. Even when the cable is twisted, the wiring length must be within 10 m.

上正科技有限公司
購買、維修 此手冊零組件
電話： 037-466233
Email: service@repairtw.com
Line id: @zzz
www.repairtw.com

REMARKS

- If the transistors in the brake unit should becomes faulty, the resistor will overheat. Install a magnetic contactor on the inverter's input side and configure a circuit that shut off the current in case of a fault.
- Do not remove the jumper across terminals P/+ and P1 except when connecting a DC reactor (FR-HEL).

2.9.4 Connection of the brake unit (BU type)

Connect the brake unit (BU type) correctly as shown below. Incorrect connection will damage the inverter. Remove the jumpers across terminals HB and PC and terminals TB and HC of the brake unit and fit one across terminals PC and TB.
The BU type is compatible with FR-A820-03160(55K) or lower and FR-A840-01800(55K) and lower.

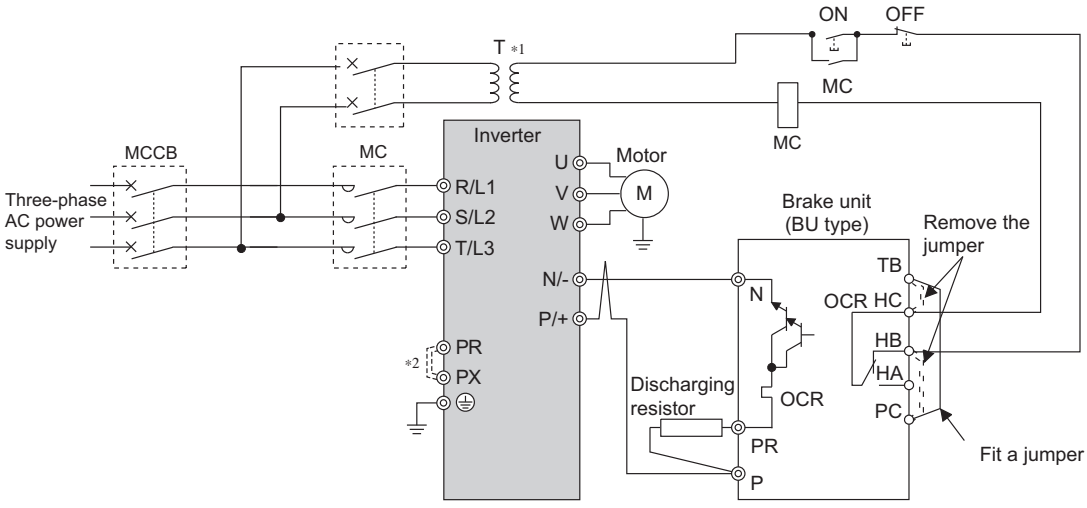

*1 When the power supply is 400 V class, install a stepdown transformer.
*2 For the FR-A820-00490(7.5K) or lower and FR-A840-00250(7.5K) or lower, be sure to remove the jumper across terminals PR and PX.

REMARKS

- The wiring distance between the inverter and brake unit (BU type), and between the brake unit (BU type) and discharging resistor must be within 2 m. Even when the cable is twisted, the wiring length must be within 5 m.
- If the transistors in the brake unit should becomes faulty, the resistor will overheat and result in a fire. Install a magnetic contactor on the inverter's input side and configure a circuit that shut off the current in case of a fault.
- Remove the jumper across terminals P/+ and P1 only when connecting a DC reactor (FR-HEL).

2.9.5 Connection of the high power factor converter (FR-HC2)

When connecting the high power factor converter (FR-HC2) to suppress power harmonics, perform wiring securely as shown below. Incorrect connection will damage the high power factor converter and the inverter.

After making sure that the wiring is correct, set "rated motor voltage" in **Pr.19 Base frequency voltage** (under V/F control) or **Pr.83 Rated motor voltage** (under other that V/F control) and "2" in **Pr.30 Regenerative function selection**. (Refer to page 593.)

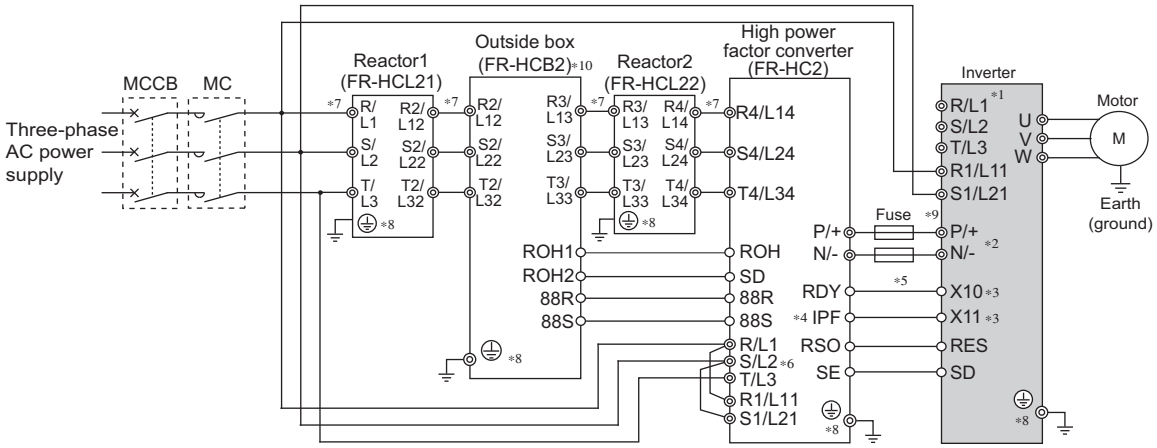

*1 Remove jumpers between terminal R/L1 and R1/L11 as well as between S/L2 and S1/L21, and connect the power supply for the control circuit to terminals R1/L11 and S1/L21. Do not connect anything to power input terminals (R/L1, S/L2, T/L3). Incorrect connection will damage the inverter. (E.OPT (option fault) will occur. (Refer to page 636.)

*2 Do not install an MCCB across the terminals P/+ and N/- (across terminals P and P/+ or across N and N/-). Connecting the opposite polarity of terminals N/- and P/+ will damage the inverter.

*3 Use **Pr.178 to Pr.189 (input terminal function selection)** to assign the terminals used for the X10 (X11) signal. (Refer to page 416.)
For RS-485 or any other communication where the start command is only transmitted once, use the X11 signal to save the operation mode at the time of an instantaneous power failure.

*4 Assign the IPF signal to an FR-HC2 terminal. (Refer to the Instruction Manual of FR-HC2.)

*5 Always connect the FR-HC2 terminal RDY to a terminal where the X10 signal or MRS signal is assigned in the inverter. Always connect the FR-HC2 terminal SE to the inverter terminal SD. Not connecting these terminals may damage the FR-HC2.

*6 Always connect the R/L1, S/L2, and T/L3 terminals of FR-HC2 to the power supply. Operating the inverter without connecting them will damage the FR-HC2.

*7 Do not install an MCCB or MC between the reactor 1 terminals (R/L1, S/L2, T/L3) and the FR-HC2 terminals (R4/L14, S4/L24, T4/L34). It will not operate properly.

*8 Securely perform grounding (earthing) by using the grounding (earthing) terminal.

*9 Installation of a fuse is recommended. (Refer to the Instruction Manual of FR-HC2.)

*10 Outside box is not available for FR-HC2-H280K or higher. Connect filter capacitors, inrush current limit resistors, and magnetic contactors. (Refer to the Instruction Manual of FR-HC2.)

上正科技有限公司
購買、維修 此手冊零組件
電話： 037-466333
Email: service@repairtw.com
Line id 微2224
www.repairtw.com

REMARKS

- The voltage phases of terminals R/L1, S/L2, and T/L3 and the voltage phases of terminals R4/L14, S4/L24, and T4/L34 must be matched.
- The control logic (sink logic/source logic) of the high power factor converter and the inverter must be matched. (Refer to page 49.)
- Do not connect a DC reactor (FR-HEL) to the inverter when FR-HC2 is connected.

2.9.6 Connection of the power regeneration common converter (FR-CV)

When connecting the power regeneration common converter (FR-CV), connect the inverter terminals (P/+, N/-) and the power regeneration common converter (FR-CV) terminals as shown below so that their symbols match with each other.
The FR-CV is applicable to FR-A820-03160(55K) or lower and FR-A840-01800(55K) or lower.
After making sure that the wiring is correct, set "2" in **Pr.30 Regenerative function selection**. (Refer to page 593.)

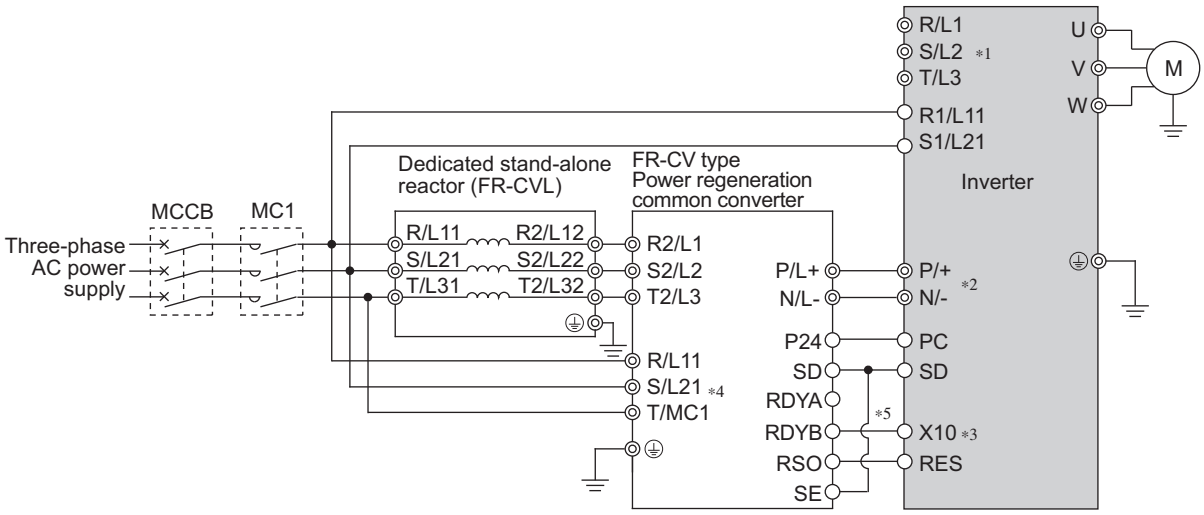

上正科技有限公司
購買、維修此手冊零組件
電話：037-466333
Email: service@repairtw.com
Line Id: @2222
www.repairtw.com

*1 Remove jumpers between terminals R/L1 and R1/L11 as well as between S/L2 and S1/L21, and connect the power supply for the control circuit to terminals R1/L11 and S1/L21. Do not connect anything to power input terminals (R/L1, S/L2, T/L3). Incorrect connection will damage the inverter. (E.OPT (option fault) will occur. (Refer to page 636.)

*2 Do not insert an MCCB between terminals P/+ and N/- (between terminals P/L+ and P/+ or between N/L- and N/-). Connecting the opposite polarity of terminals N/- and P/+ will damage the inverter.

*3 Use **Pr.178 to Pr.189 (input terminal function selection)** to assign the terminals used for the X10 signal. (Refer to page 416.)

*4 Be sure to connect the power supply and terminals R/L11, S/L21, and T/MC1. Operating the inverter without connecting them will damage the power regeneration common converter.

*5 Always connect terminal RDYB of the FR-CV to the inverter terminal where the X10 signal or the MRS signal is assigned to. Always connect terminal SE of the FR-CV to the inverter terminal SD. Not connecting these terminals may damage the FR-CV.

REMARKS

- The voltage phases of terminals R/L11, S/L21, and T/MC1 and the voltage phases of terminals R2/L1, S2/L2, and T2/L3 must be matched.
- Use the sink logic (factory setting) when the FR-CV is connected. It cannot be connected when the source logic is selected.
- Do not connect a DC reactor (FR-HEL) to the inverter when FR-CV is connected.

2.9.7 Connection of the power regeneration converter (MT-RC)

When connecting the power regeneration converter (MT-RC), perform wiring securely as shown below. Incorrect connection will damage the power regeneration converter and the inverter. The MT-RC is applicable to FR-A820-03800(75K) or higher and FR-A840-02160(75K) or higher. After making sure that the wiring is correct, set "1" in **Pr.30 Regenerative function selection** and "0" in **Pr.70 Special regenerative brake duty**.

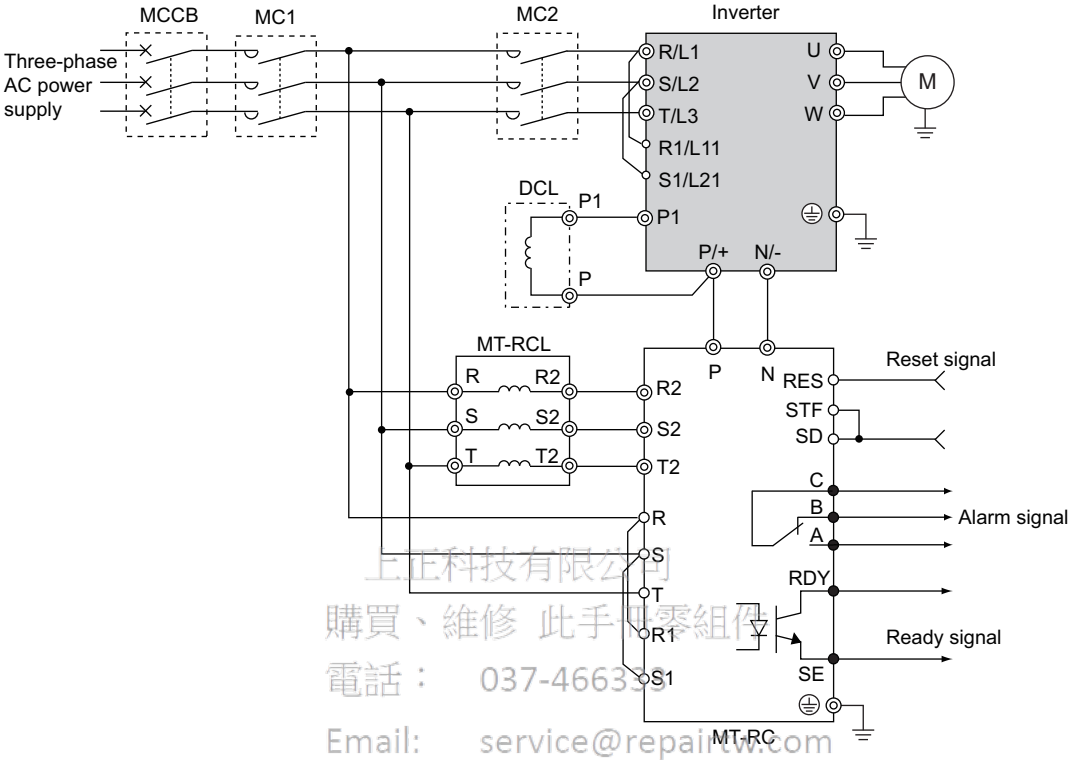

上正科技有限公司
購買、維修 此手冊零組件
電話： 037-466320
Email: service@repairtw.com
Line id: @zzzz
www.repairtw.com

REMARKS

- When using the inverter with the MT-RC, install a magnetic contactor (MC) at the input side of the inverter so that power is supplied to the inverter after 1 s or more has elapsed after powering ON the MT-RC. When power is supplied to the inverter prior to the MT-RC, the inverter and the MT-RC may be damaged or the MCCB may trip or be damaged.
- When connecting the power coordination reactor and others, refer to Instruction Manual of the MT-RC for precautions.

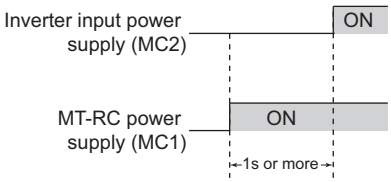

2.9.8 Connection of the DC reactor (FR-HEL)

- Keep the surrounding air temperature within the permissible range (-10°C to +50°C). Keep enough clearance around the reactor because it heats up. (Take 10 cm or more clearance on top and bottom and 5 cm or more on left and right regardless of the installation direction.)

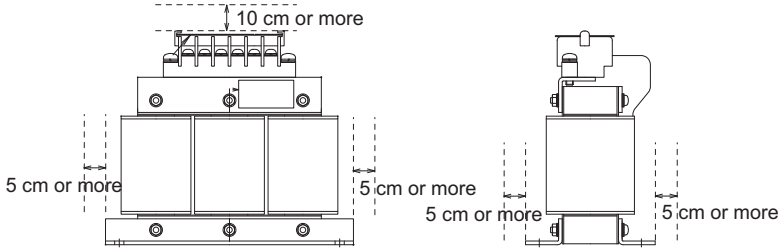

- When using the DC reactor (FR-HEL), connect it across terminals P/+ and P1.
  For the FR-A820-03160(55K) or lower and FR-A840-01800(55K) or lower, the jumper connected across terminals P/+ and P1 must be removed.
  Otherwise, the reactor will not be effective.

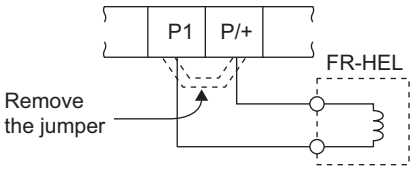

- Select a DC reactor according to the applied motor capacity. (Refer to page 670.) FR-A820-03800(75K) or higher and FR-A840-02160(75K) or higher, always connect a DC reactor.
- Since the DC reactor (FR-HEL) is electrically connected to the enclosure through mounting screws, the DC reactor is earthed (grounded) by being securely mounted to the enclosure. However, if the DC reactor is not earthed (grounded) securely enough, an earthing (grounding) cable may be used.
  When using an earthing (grounding) cable for FR-HEL-(H)55K or lower, wire the cable to the installation hole where varnish is removed. For FR-HEL-(H)75K or higher, use an earth (ground) terminal to perform earthing (grounding). (Refer to the Instruction Manual of the FR-HEL.)

上正科技有限公司
購買、維修此手冊零組件
電話： 037-466333
Email: service@repairtw.com
Line id: @zzzz
www.repairtw.com

REMARKS

- The wiring distance must be within 5 m.
- As a reference, the cable gauge for the connection must be equal to or larger than that of the power supply cables (R/L1, S/L2, T/L3) and the earthing (grounding) cable. (Refer to page 41.)

MEMO

上正科技有限公司
購買、維修 此手冊零組件
電話： 037-466333
Email: service@repairtw.com
Line id: @zzzz
www.repairtw.com

3 PRECAUTIONS FOR USE OF THE INVERTER

This chapter explains the precautions for use of this product.
Always read the instructions before using the equipment.
For "PRECAUTIONS FOR USE OF THE INVERTER" of the IP55 compatible model, refer to FR-A806 Instruction Manual (Hardware).

上位科技有限公司
購買、維修 此手冊零組件
電話： 037-466333
Email: service@repairtw.com
Line id: @zzzz
www.repairtw.com

3.1 Electro-magnetic interference (EMI) and leakage currents ..82
3.2 Power supply harmonics 87
3.3 Installation of a reactor 90
3.4 Power-OFF and magnetic contactor (MC) 91
3.5 Countermeasures against deterioration of the 400 V class motor insulation.....92
3.6 Checklist before starting operation 93
3.7 Failsafe system which uses the inverter 95

3.1 Electro-magnetic interference (EMI) and leakage currents

3.1.1 Leakage currents and countermeasures

Capacitances exist between the inverter I/O cables, other cables and earth and in the motor, through which a leakage current flows. Since its value depends on the static capacitances, carrier frequency, etc., low acoustic noise operation at the increased carrier frequency of the inverter will increase the leakage current. Therefore, take the following countermeasures. Select the earth leakage current breaker according to its rated sensitivity current, independently of the carrier frequency setting.

(1) To-earth (ground) leakage currents

Leakage currents may flow not only into the inverter's own line but also into the other lines through the earthing (grounding) cable, etc. These leakage currents may operate earth leakage circuit breakers and earth leakage relays unnecessarily.

•Suppression technique

- If the carrier frequency setting is high, decrease the **Pr.72 PWM frequency selection** setting.
  Note that motor noise increases. Selecting **Pr.240 Soft-PWM operation selection** makes the sound inoffensive.
- By using earth leakage circuit breakers designed for harmonic and surge suppression in the inverter's own line and other line, operation can be performed with the carrier frequency kept high (with low noise).

• To-earth (ground) leakage currents

- Take caution as long wiring will increase the leakage current. Decreasing the carrier frequency of the inverter reduces the leakage current.
- Increasing the motor capacity increases the leakage current. The leakage current of the 400 V class is larger than that of the 200 V class.

上正科技有限公司
購買、維修 此手冊零組件
電話 04-24663333
Email service@repairtw.com
Line@ @jsc
www.repairtw.com

(2) Line-to-line leakage currents

Harmonics of leakage currents flowing in static capacitances between the inverter output cables may operate the external thermal relay unnecessarily. When the wiring length is long (50 m or more) for the 400 V class small-capacity models (FR-A840-00250(7.5K) or lower), the external thermal relay is likely to operate unnecessarily because the ratio of the leakage current to the rated motor current increases.

• Line-to-line leakage current example (200 V class)

Motor capacity (kW)	Rated motor current (A)	Leakage current (mA) *1	
		Wiring length 50 m	Wiring length 100 m
0.4	1.8	310	500
0.75	3.2	340	530
1.5	5.8	370	560
2.2	8.1	400	590
3.7	12.8	440	630
5.5	19.4	490	680
7.5	25.6	535	725

- Motor: SF-JR 4P
- Carrier frequency: 14.5 kHz
- Cable: 2 mm^2, 4 cores
- Cabtyre cable

*1 The leakage currents of the 400 V class are about twice as large.

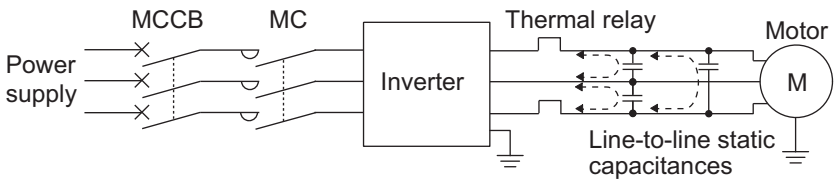

Line-to-line leakage currents path

• Countermeasures

- Use **Pr.9 Electronic thermal O/L relay**.
- If the carrier frequency setting is high, decrease the **Pr.72 PWM frequency selection** setting.
  Note that motor noise increases. Selecting **Pr.240 Soft-PWM operation selection** makes the sound inoffensive.
  To ensure that the motor is protected against line-to-line leakage currents, it is recommended to use a temperature sensor to directly detect motor temperature.

• Installation and selection of the molded case circuit breaker

Install a molded case circuit breaker (MCCB) on the power receiving side to protect the wiring at the inverter input side. Select an MCCB according to the inverter input side power factor, which depends on the power supply voltage, output frequency and load. Especially for a completely electromagnetic MCCB, a slightly large capacity must be selected since its operation characteristic varies with harmonic currents. (Check it in the data of the corresponding breaker.) As an earth leakage current breaker, use the Mitsubishi earth leakage current breaker designed for harmonics and surge suppression.

(3) Selecting the rated sensitivity current for the earth leakage circuit breaker

When using an earth leakage circuit breaker with the inverter circuit, select its rated sensitivity current as follows, independently of the PWM carrier frequency.

- Breaker designed for harmonic and surge suppression
  Rated sensitivity current
  $I\Delta n \geq 10 \times (Ig1 + Ign + Igi + Ig2 + Igm)$
- Standard breaker
  Rated sensitivity current
  $I\Delta n \geq 10 \times \{Ig1 + Ign + Igi + 3 \times (Ig2 + Igm)\}$

Ig1, Ig2: Leakage currents in wire path during commercial power supply operation
Ign: Leakage current of inverter input side noise filter
Igm: Leakage current of motor during commercial power supply operation
Igi: Leakage current of inverter unit

Example of leakage current of cable path per 1km during the commercial power supply operation when the CV cable is routed in metal conduit (200V 60Hz)

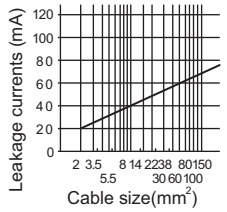

Leakage current example of three-phase induction motor during the commercial power supply operation (200V 60Hz)

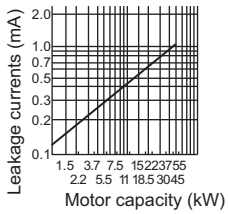

Example of leakage current per 1km during the commercial power supply operation when the CV cable is routed in metal conduit

(Three-phase three-wire delta connection 400V60Hz)

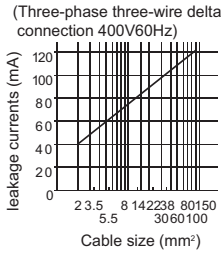

Leakage current example of three-phase induction motor during the commercial power supply operation

(Totally-enclosed fan-cooled type motor 400V60Hz)

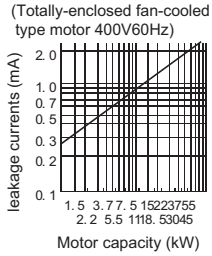

For "人" connection, the amount of leakage current is appox.1/3 of the above value.

<Example>

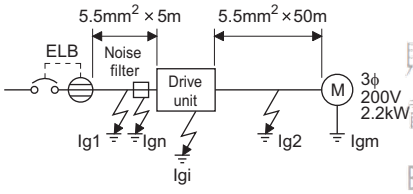

	Breaker designed for harmonic and surge suppression	Standard breaker
Leakage current Ig1 (mA)	$33 \times \frac{5\ m}{1000\ m} = 0.17$	
Leakage current Ign (mA)	0 (without noise filter)	
Leakage current Igi (mA)	1 (without EMC filter) For the leakage current of the inverter, refer to the following table.	
Leakage current Ig2 (mA)	$33 \times \frac{50\ m}{1000\ m} = 1.65$	
Motor leakage current Igm (mA)	0.18	
Total leakage current (mA)	3.00	6.66
Rated sensitivity current (mA) (≥ Ig × 10)	30	100

上正科技有限公司
購買、維修 此手冊零組件
電話： 037-466333
Email: service@repairtw.com
Line id: @zzzz
www.repairtw.com

- **Inverter leakage current (with and without EMC filter)**

Input power conditions
(200 V class: 220 V/60 Hz, 400 V class: 440 V/60 Hz, power supply unbalance within 3%)

	Voltage (V)	EMC filter ON (mA)	EMC filter OFF (mA)
Phase earthing (grounding) 	200	22	1
	400	35	2
Earthed-neutral system 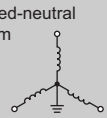	400	2	1

REMARKS

- Install the earth leakage circuit breaker (ELB) on the input side of the inverter.
- In the 人 connection earthed-neutral system, the sensitivity current is blunt against a ground fault in the inverter output side. Earthing (Grounding) must conform to the requirements of national and local safety regulations and electrical codes. (NEC section 250, IEC 536 class 1 and other applicable standards)
- When the breaker is installed on the output side of the inverter, it may be unnecessarily operated by harmonics even if the effective value is within the rating.
  In this case, do not install the breaker since the eddy current and hysteresis loss will increase, leading to temperature rise.
- The following models are standard breakers: BV-C1, BC-V, NVB, NV-L, NV-G2N, NV-G3NA, NV-2F, earth leakage relay (except NV-ZHA), and NV with AA neutral wire open-phase protection. The other models are designed for harmonic and surge suppression: NV-C/NV-S/MN series, NV30-FA, NV50-FA, BV-C2, earth leakage alarm breaker (NF-Z), NV-ZHA, and NV-H.

3.1.2 Countermeasures against inverter-generated EMI

Some electromagnetic noises enter the inverter to cause the inverter malfunction, and others are radiated by the inverter to cause the peripheral devices to malfunction. Though the inverter is designed to have high immunity performance, it handles low-level signals, so it requires the following basic techniques. Also, since the inverter chops outputs at high carrier frequency, that could generate electromagnetic noises. If these electromagnetic noises cause peripheral devices to malfunction, EMI countermeasures should be taken to suppress noises. These techniques differ slightly depending on EMI paths.

- Basic techniques
  - Do not run the power cables (I/O cables) and signal cables of the inverter in parallel with each other and do not bundle them.
  - Use shielded twisted pair cables for the detector connecting and control signal cables and connect the sheathes of the shielded cables to terminal SD.
  - Ground (Earth) the inverter, motor, etc. at one point.

- Techniques to reduce electromagnetic noises that enter and cause a malfunction of the inverter (EMI countermeasures)
  When devices that generate many electromagnetic noises (which use magnetic contactors, electromagnetic brakes, many relays, for example) are installed near the inverter and the inverter may malfunction due to electromagnetic noises, the following countermeasures must be taken:
  - Provide surge suppressors fordevices that generate many electromagnetic noises to suppress electromagnetic noises.
  - Install data line filters (**page 85**) to signal cables.
  - Ground (Earth) the shields of the detector connection and control signal cables with cable clamp metal.

- Techniques to reduce electromagnetic noises that are radiated by the inverter to cause the peripheral devices to malfunction (EMI countermeasures)
  Inverter-generated noises are largely classified into those radiated by the cables connected to the inverter and inverter main circuits (I/O), those electromagnetically and electrostatically induced to the signal cables of the peripheral devices close to the main circuit power supply, and those transmitted through the power supply cables.

上正科技有限公司
購買、維修 此手冊零組件
電話： 037-466333
Email: service@repairtw.com
Line id: @zzzz
www.repairtw.com

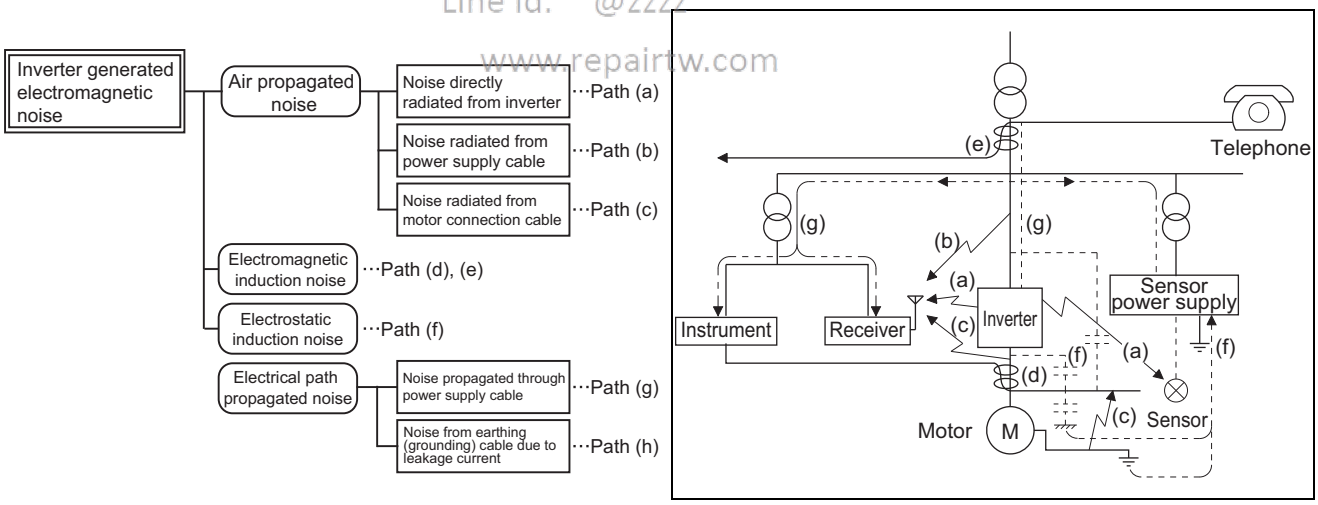

Noise propagation path	Countermeasure
(a)(b)(c)	When devices that handle low-level signals and are liable to malfunction due to electromagnetic noises, e.g. instruments, receivers and sensors, are contained in the enclosure that contains the inverter or when their signal cables are run near the inverter, the devices may malfunction due to by air-propagated electromagnetic noises. The following countermeasures must be taken: (1) Install easily affected devices as far away as possible from the inverter. (2) Run easily affected signal cables as far away as possible from the inverter and its I/O cables. (3) Do not run the signal cables and power cables (inverter I/O cables) in parallel with each other and do not bundle them. (4) Set the EMC filter ON/OFF connector of the inverter to the ON position. (Refer to page 86.) (5) Inserting a line noise filter into the output suppresses the radiated noise from the cables. (6) Use shielded cables as signal cables and power cables and run them in individual metal conduits to produce further effects.
(d)(e)(f)	When the signal cables are run in parallel with or bundled with the power cables, magnetic and static induction noises may be propagated to the signal cables to cause malfunction of the devices and the following countermeasures must be taken: (1) Install easily affected devices as far away as possible from the inverter. (2) Run easily affected signal cables as far away as possible from the inverter and its I/O cables. (3) Do not run the signal cables and power cables (inverter I/O cables) in parallel with each other and do not bundle them. (4) Use shielded cables as signal cables and power cables and run them in individual metal conduits to produce further effects.
(g)	When the power supplies of the peripheral devices are connected to the power supply of the inverter in the same line, inverter-generated noises may flow back through the power supply cables to cause malfunction of the devices and the following countermeasures must be taken: (1) Set the EMC filter ON/OFF connector of the inverter to the ON position. (Refer to page 86.) (2) Install the line noise filter (FR-BLF, FR-BSF01) to the power cables (output cables) of the inverter.
(h)	When a closed loop circuit is formed by connecting the peripheral device wiring to the inverter, leakage currents may flow through the earthing (grounding) cable of the inverter to cause the device to malfunction. In that case, disconnecting the earthing (grounding) cable from the device may stop the malfunction of the device.

- **Data line filter**

Data line filter is effective as an EMI countermeasure. Provide a data line filter for the detector cable, etc.
<Example> Data line filter : ZCAT3035-1330 (by TDK)
: ESD-SR-250 (by NEC TOKIN)
Impedance (ZCAT3035-1330)

Impedance (Ω)	
10 to 100 MHz	100 to 500 MHz
80	150

The impedance values above are reference values, and not guaranteed values.

昌昇科技有限公司
購買、維修 此手冊零組件
電話： 037-466333
Email: service@repairtw.com
Line Id: @zzzz
www.repairtw.com

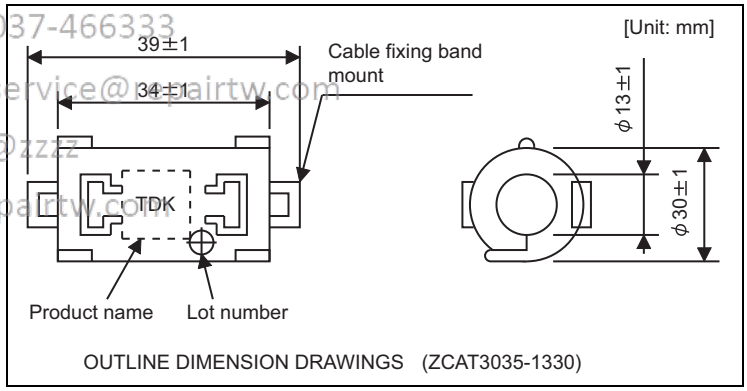

OUTLINE DIMENSION DRAWINGS (ZCAT3035-1330)

- **EMI countermeasure example**

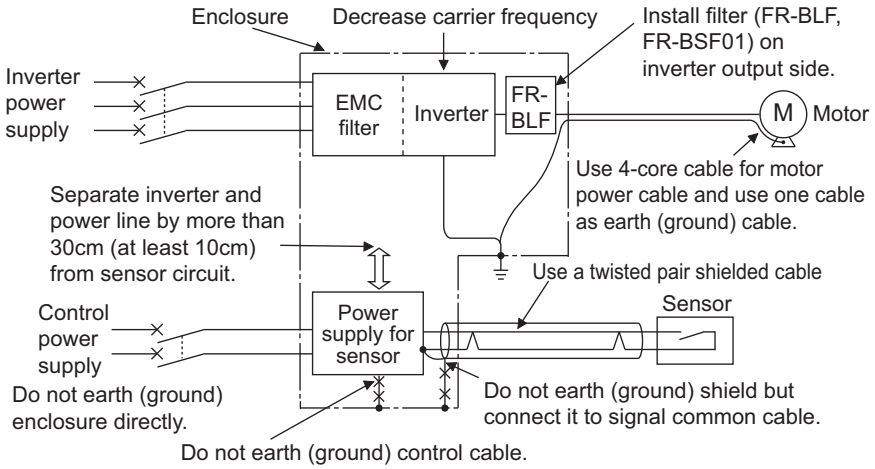

REMARKS

- For compliance with the EU EMC Directive, refer to the Instruction Manual (Startup).

3.1.3 Built-in EMC filter

This inverter is equipped with a built-in EMC filter (capacitive filter) and a common mode choke.
These filters are effective in reducing air-propagated noise on the input side of the inverter.
To enable the EMC filter, fit the EMC filter ON/OFF connector to the ON position. The FM type is initially set to "disabled" (OFF), and the CA type to "enabled" (ON).
The input side common mode choke, which is built in the FR-A820-03160(55K) or lower and FR-A840-01800(55K) or lower inverter, is always enabled regardless of the EMC filter ON/OFF connector setting.

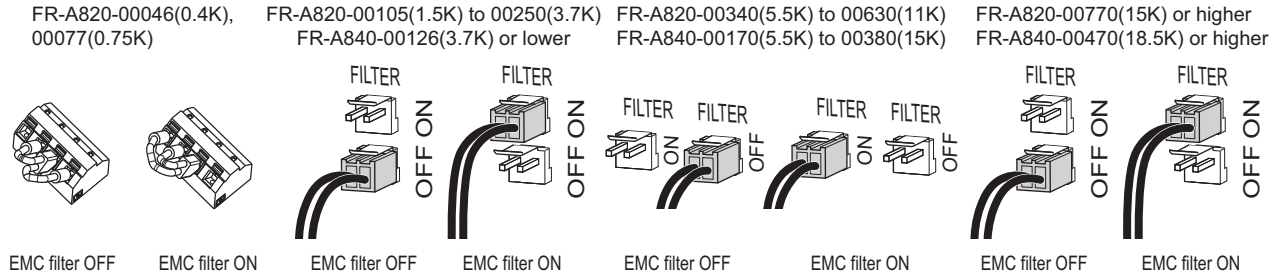

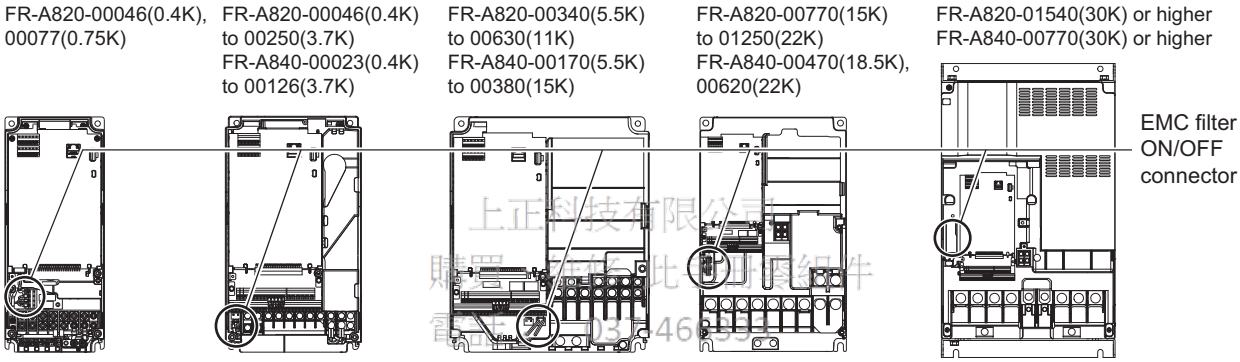

上正科技有限公司
購買前請比價與確認
電話：03-3466991
Email: service@repairtw.com
Line id: @zzzz
www.repairtw.com

<How to enable or disable the filter>

- Before removing a front cover, check to make sure that the indication of the inverter operation panel is OFF, wait for at least 10 minutes after the power supply has been switched OFF, and check that there is no residual voltage using a tester or the like.
- For FR-A820-00105(1.5K) or higher and FR-A840-00023(0.4K) or higher
  - When disconnecting the connector, push the fixing tab and pull the connector straight without pulling the cable or forcibly pulling the connector with the tab fixed.
    When installing the connector, also engage the fixing tab securely.
    (If it is difficult to disconnect the connector, use a pair of needle-nose pliers, etc.)

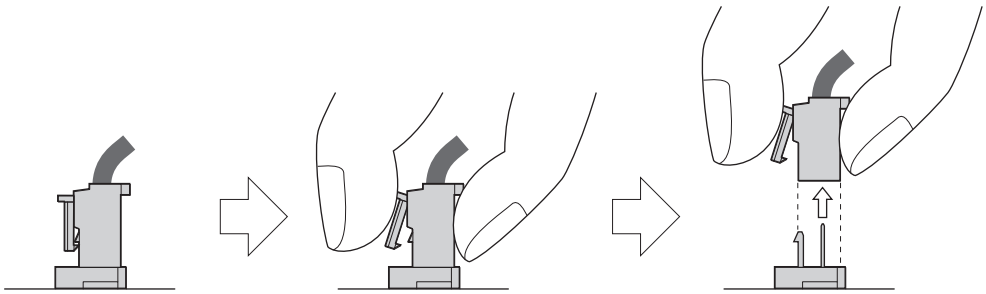

- For FR-A820-00077(0.75K) or lower
  - Remove the control circuit terminal block. (Refer to page 662)
  - Connect the shorting wire to the corresponding terminal to enable or disable the filter. Handle the terminal in the same way as the control circuit terminal block. (Refer to page 51)
  - Reinstall the control circuit terminal block as it was after switching the shortening wire.

REMARKS

- Fit the connector or shorting wire to either ON or OFF position.
- Enabling (turning ON) the EMC filter increases leakage current.(Refer to page 83.)

⚠ WARNING

⚠ While power is ON or when the inverter is running, do not open the front cover. Otherwise you may get an electric shock.

3.2 Power supply harmonics

3.2.1 Power supply harmonics

The inverter may generate power supply harmonics from its converter circuit to affect the power generator, power factor correction capacitor etc. Power supply harmonics are different from noise and leakage currents in source, frequency band and transmission path. Take the following countermeasure suppression techniques.

- The differences between harmonics and noises

Item	Harmonics	Noise
Frequency	Normally 40th to 50th degrees or less (3 kHz or less).	High frequency (several 10 kHz to 1 GHz order).
Location	To-electric channel, power impedance.	To-space, distance, wiring path,
Quantitative understanding	Theoretical calculation possible.	Random occurrence, quantitative grasping difficult.
Generated amount	Nearly proportional to the load capacity.	Changes with the current variation ratio. (Gets larger as switching speed increases.)
Affected equipment immunity	Specified by standards per equipment.	Different depending on maker's equipment specifications.
Countermeasure	Provide a reactor.	Increase distance.

上正科技有限公司
Email: service@repairtw.com
Line id: @zzzz
www.repairtw.com

- **Countermeasures**

The harmonic current generated from the inverter to the input side differs according to various conditions such as the wiring impedance, whether a reactor is used or not, and output frequency and output current on the load side.
For the output frequency and output current, we understand that this should be calculated in the conditions under the rated load at the maximum operating frequency.

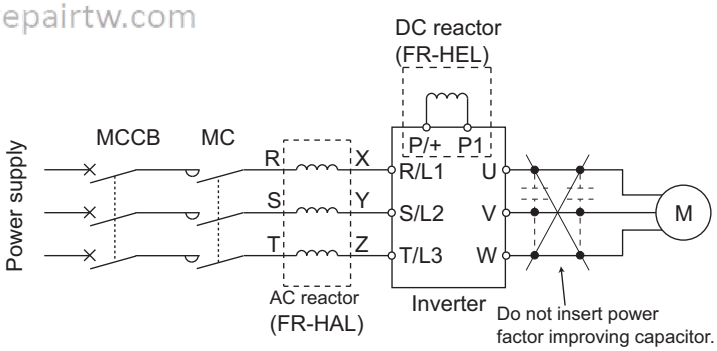

REMARKS

- The power factor improving capacitor and surge suppressor on the inverter output side may be overheated or damaged by the harmonic components of the inverter output. Also, since an excessive current flows in the inverter to activate overcurrent protection, do not provide a capacitor and surge suppressor on the inverter output side when the motor is driven by the inverter. For power factor improvement, install a reactor on the inverter input side or in the DC circuit.

3.2.2 Harmonic suppression guidelines in Japan

Harmonic currents flow from the inverter to a power receiving point via a power transformer. The Harmonic Suppression Guidelines was established to protect other consumers from these outgoing harmonic currents.
The three-phase 200 V input specifications 3.7 kW or lower were previously covered by "the Harmonic Suppression Guidelines for Household Appliances and General-purpose Products" and other models were covered by "the Harmonic Suppression Guidelines for Consumers Who Receive High Voltage or Special High Voltage". However, the transistorized inverter has been excluded from the target products covered by "the Harmonic Suppression Guidelines for Household Appliances and General-purpose Products" in January 2004 and "the Harmonic Suppression Guideline for Household Appliances and General-purpose Products" was repealed on September 6, 2004.
All capacity and all models of general-purpose inverter used by specific consumers are now covered by "the Harmonic Suppression Guidelines for Consumers Who Receive High Voltage or Special High Voltage" (hereinafter referred to as "the Specific Consumer Guidelines").
"Specific Consumer Guidelines"

This guideline sets forth the maximum harmonic currents outgoing from a high-voltage or especially high-voltage receiving consumer who will install, add or renew harmonic generating equipment. If any of the maximum values is exceeded, this guideline requires that consumer to take certain suppression measures.

Table 1 Maximum Values of Outgoing Harmonic Currents per 1kW Contract Power

Received power voltage	5th	7th	11th	13th	17th	19th	23rd	Over 23rd
6.6 kV	3.5	2.5	1.6	1.3	1.0	0.9	0.76	0.70
22 kV	1.8	1.3	0.82	0.69	0.53	0.47	0.39	0.36
33 kV	1.2	0.86	0.55	0.46	0.35	0.32	0.26	0.24

(1) Application of the specific consumer guidelines

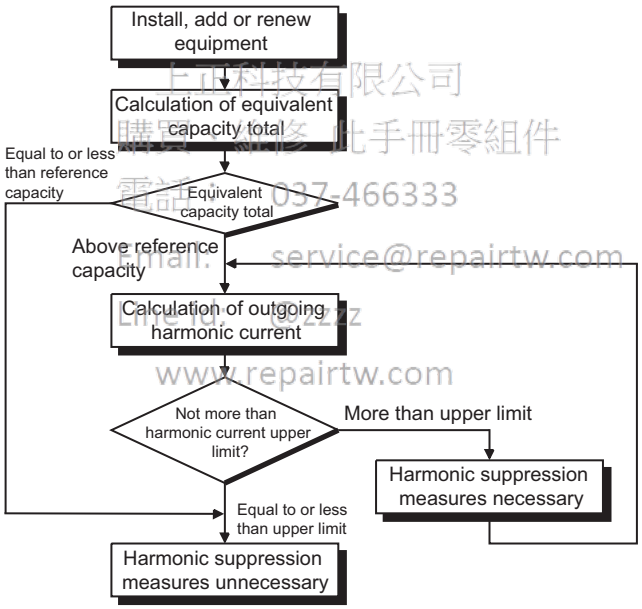

上頌科技有限公司
購買、維修 此手冊零組件
電話: 037-466333
Email: service@repairtw.com
www.repairtw.com

Table 2 Conversion factors for FR-A800 series

Classification	Circuit type		Conversion coefficient Ki
3	Three-phase bridge (Capacitor smoothing)	Without reactor	K31 = 3.4
		With reactor (AC side)	K32 = 1.8
		With reactor (DC side)	K33 = 1.8
		With reactors (AC, DC sides)	K34 = 1.4
5	Self-excitation three-phase bridge	When a high power factor converter is used	K5 = 0

Table 3 Equivalent Capacity Limits

Received power voltage	Reference capacity
6.6 kV	50 kVA
22/33 kV	300 kVA
66 kV or more	2000 kVA

Table 4 Harmonic content (Values of the fundamental current is 100%)

Reactor	5th	7th	11th	13th	17th	19th	23rd	25th
Not used	65	41	8.5	7.7	4.3	3.1	2.6	1.8
Used (AC side)	38	14.5	7.4	3.4	3.2	1.9	1.7	1.3
Used (DC side)	30	13	8.4	5.0	4.7	3.2	3.0	2.2
Used (AC, DC sides)	28	9.1	7.2	4.1	3.2	2.4	1.6	1.4

- Calculation of equivalent capacity P0 of harmonic generating equipment

  "Equivalent capacity" is the capacity of a 6-pulse converter converted from the capacity of consumer's harmonic generating equipment and is calculated by the following equation: If the sum of equivalent capacities is higher than the limit in Table 3, harmonics must be calculated with the following procedure:

  P0 = ∑ (Ki × Pi) [kVA]

  Ki: Conversion coefficient (Refer to Table 2)

  Pi: Rated capacity of harmonic generating equipment *[kVA]

  i: Number indicating the conversion circuit type

  * Rated capacity: Determined by the capacity of the applied motor and found in Table 5. The rated capacity used here is used to calculate the generated harmonic amount and is different from the power supply capacity required for actual inverter drive.

- Calculation of outgoing harmonic current

  Outgoing harmonic current = fundamental wave current (value converted from received power voltage) × operation ratio × harmonic content

  •Operation ratio: Operation ratio = actual load factor × operation time ratio during 30 minutes

  •Harmonic content: Found in Table 4.

Table 5 Rated capacities and outgoing harmonic currents of inverter-driven motors

Applicable motor (kW)	Rated current (A)		Fundamental wave current converted from 6.6 kV (mA)	Rated capacity (kVA)	Outgoing harmonic current converted from 6.6 kV (mA) (No reactor, 100% operation ratio)							
	200 V	400 V			5th	7th	11th	13th	17th	19th	23rd	25th
0.4	1.61	0.81	49	0.57	31.85	20.09	4.165	3.773	2.107	1.519	1.274	0.882
0.75	2.74	1.37	83	0.97	53.95	34.03	7.055	6.391	3.569	2.573	2.158	1.494
1.5	5.50	2.75	167	1.95	108.6	68.47	14.20	12.86	7.181	5.177	4.342	3.006
2.2	7.93	3.96	240	2.81	156.0	98.40	20.40	18.48	10.32	7.440	6.240	4.320
3.7	13.0	6.50	394	4.61	257.1	161.5	33.49	30.34	16.94	12.21	10.24	7.092
5.5	19.1	9.55	579	6.77	376.1	237.4	49.22	44.58	24.90	17.95	15.05	10.42
7.5	25.6	12.8	776	9.07	504.4	318.2	65.96	59.75	33.37	24.06	20.18	13.97
11	36.9	18.5	1121	13.1	728.7	459.6	95.29	86.32	48.20	34.75	29.15	20.18
15	49.8	24.9	1509	17.6	980.9	618.7	128.3	116.2	64.89	46.78	39.24	27.16
18.5	61.4	30.7	1860	21.8	1209	762.6	158.1	143.2	79.98	57.66	48.36	33.48
22	73.1	36.6	2220	25.9	1443	910.2	188.7	170.9	95.46	68.82	57.72	39.96
30	98.0	49.0	2970	34.7	1931	1218	252.5	228.7	127.7	92.07	77.22	53.46
37	121	60.4	3660	42.8	2379	1501	311.1	281.8	157.4	113.5	95.16	65.88
45	147	73.5	4450	52.1	2893	1825	378.3	342.7	191.4	138.0	115.7	80.10
55	180	89.9	5450	63.7	3543	2235	463.3	419.7	234.4	169.0	141.7	98.10

Applicable motor (kW)	Rated current (A)		Fundamental wave current converted from 6.6 kV (mA)	Rated capacity (kVA)	Outgoing harmonic current converted from 6.6 kV (mA) (With a DC reactor, 100% operation ratio)							
	200 V	400 V			5th	7th	11th	13th	17th	19th	23rd	25th
75	245	123	7455	87.2	2237	969	626	373	350	239	224	164
90	293	147	8909	104	2673	1158	748	445	419	285	267	196
110	357	179	10848	127	3254	1410	911	542	510	347	325	239
132	-	216	13091	153	3927	1702	1100	655	615	419	393	288
160	-	258	15636	183	4691	2033	1313	782	735	500	469	344
220	-	355	21515	252	6455	2797	1807	1076	1011	688	645	473
250	-	403	24424	286	7327	3175	2052	1221	1148	782	733	537
280	-	450	27273	319	8182	3545	2291	1364	1282	873	818	600
315	-	506	30667	359	9200	3987	2576	1533	1441	981	920	675
355	-	571	34606	405	10382	4499	2907	1730	1627	1107	1038	761
400	-	643	38970	456	11691	5066	3274	1949	1832	1247	1169	857
450	-	723	43818	512	13146	5696	3681	2191	2060	1402	1315	964
500	-	804	48727	570	14618	6335	4093	2436	2290	1559	1462	1072
560	-	900	54545	638	16364	7091	4582	2727	2564	1746	1636	1200

工正科技有限公司 購買・維修・料手机零部件 電話：037 Email: service@repairtw.com Line id: @zzz www.repairtw.com

Installation of a reactor

- Determining if a countermeasure is required
  A countermeasure for harmonics is required if the following condition is satisfied: outgoing harmonic current > maximum value per 1 kW contract power × contract power

- Harmonic suppression techniques

No.	Item	Description
1	Reactor installation (FR-HAL, FR-HEL)	Install an AC reactor (FR-HAL) on the AC side of the inverter or a DC reactor (FR-HEL) on its DC side, or install both to suppress outgoing harmonic currents.
2	High power factor converter (FR-HC2)	This converter trims the current waveform to be a sine waveform by switching the rectifier circuit (converter module) with transistors. Doing so suppresses the generated harmonic amount significantly. Connect it to the DC area of an inverter. Use the high power factor converter (FR-HC2) with the accessories that come as standard.
3	Installation of power factor improving capacitor	When used with a reactor connected in series, the power factor improving correction capacitor can absorb harmonic currents.
4	Transformer multi-phase operation	Use two transformers with a phase angle difference of 30° as in 人-Δ and Δ-Δ combinations to provide an effect corresponding to 12 pulses, reducing low-degree harmonic currents.
5	Passive filter (AC filter)	A capacitor and a reactor are used together to reduce impedances at specific frequencies. Harmonic currents are expected to be absorbed greatly by using this technique.
6	Active filter	This filter detects the current in a circuit generating a harmonic current and generates a harmonic current equivalent to a difference between that current and a fundamental wave current to suppress the harmonic current at the detection point. Harmonic currents are expected to be absorbed greatly by using this technique.

3.3 Installation of a reactor

購買、維修 此手冊零組件
電話：
Email: service@repairtw.com
www.repairtw.com

When the inverter is connected near a large-capacity power transformer (1000 kVA or more) or when a power factor correction capacitor is to be switched over, an excessive peak current may flow in the power input circuit, damaging the converter circuit. To prevent this, always install an optional AC reactor (FR-HAL).

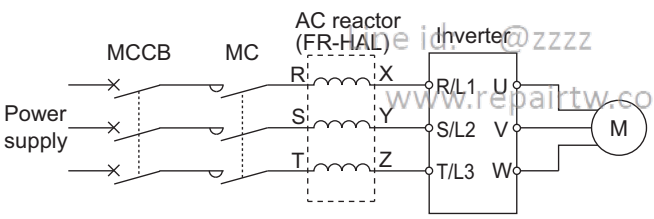

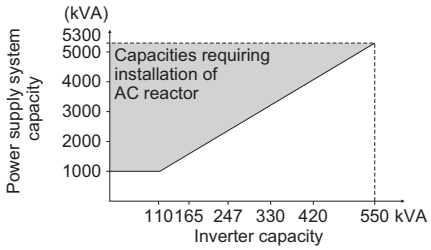

3.4 Power-OFF and magnetic contactor (MC)

(1) Inverter input side magnetic contactor (MC)

On the inverter input side, it is recommended to provide an MC for the following purposes:
(Refer to page 20 for selection.)

- To disconnect the inverter from the power supply at activation of a protective function or at malfunctioning of the driving system (emergency stop, etc.). For example, an MC prevents overheat or burnout of the brake resistor when heat capacity of the resistor is insufficient or brake regenerative transistor is damaged with short while connecting an optional brake resistor.
- To prevent any accident due to an automatic restart at power restoration after an inverter stop made by a power failure.
- To separate the inverter from the power supply to ensure safe maintenance and inspection work.

If using an MC for emergency stop during operation, select an MC regarding the inverter input side current as JEM1038-AC-3 class rated current.

REMARKS

- Since repeated inrush currents at power ON will shorten the life of the converter circuit (switching life is about 1,000,000 times), frequent starts and stops of the magnetic contactor must be avoided. Turn ON/OFF the inverter start controlling terminals (STF, STR) to run/stop the inverter.

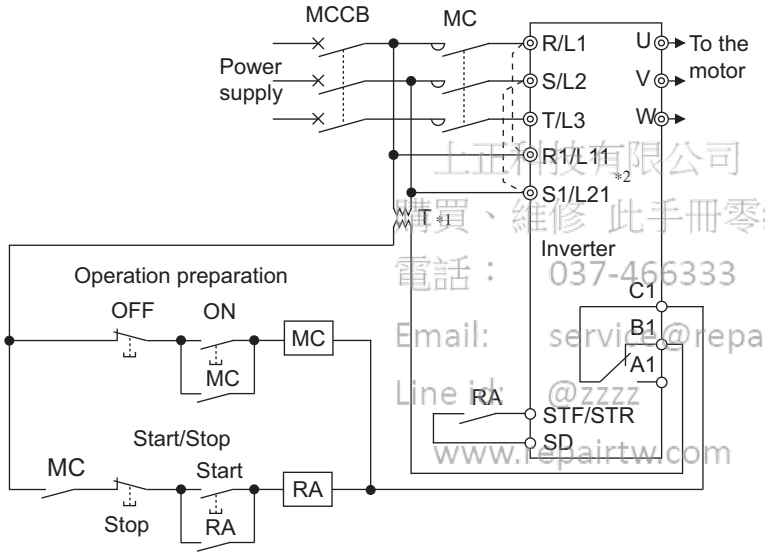

上正科技有限公司
購買、維修 此手冊零組件
電話： 037-466333
Email: service@repairtw.com
Line id @zzzz
www.repairtw.com

- **Inverter start/stop circuit example**

As shown on the left, always use the start signal (ON or OFF of STF(STR) signal) to make a start or stop.

*1 When the power supply is 400 V class, install a stepdown transformer.

*2 Connect the power supply terminals R1/L11, S1/L21 of the control circuit to the input side of the MC to hold an alarm signal when the inverter's protective circuit is a ctivated. At this time, remove jumpers across terminals R/L1 and R1/L11 and S/L2 and S1/L21. (Refer to page 54 for removal of the jumper.)

(2) Handling of the magnetic contactor on the inverter's output side

Switch the magnetic contactor between the inverter and motor only when both the inverter and motor are at a stop. When the magnetic contactor is turned ON while the inverter is operating, overcurrent protection of the inverter and such will activate. When an MC is provided to switch to a commercial power supply, for example, it is recommended to use the commercial power supply-inverter switchover function **Pr.135 to Pr.139** (Refer to page 450). (The commercial power supply operation is not available with vector control dedicated motors (SF-V5RU, SF-THY) nor with PM motors.)

(3) Handling of the manual contactor on the inverter's output side

A PM motor is a synchronous motor with high-performance magnets embedded inside. High-voltage is generated at the motor terminals while the motor is running even after the inverter power is turned OFF. In an application where the PM motor is driven by the load even after the inverter is powered OFF, a low-voltage manual contactor must be connected at the inverter's output side.

REMARKS

- Before wiring or inspection for a PM motor, confirm that the PM motor is stopped. In an application, such as fan and blower, where the motor is driven by the load, a low-voltage manual contactor must be connected at the inverter's output side, and wiring and inspection must be performed while the contactor is open. Otherwise you may get an electric shock.
- Do not open or close the contactor while the inverter is running (outputting).

3.5 Countermeasures against deterioration of the 400 V class motor insulation

In the PWM type inverter, a surge voltage attributable to wiring constants is generated at the motor terminals. Especially in a 400 V class motor, the surge voltage may deteriorate the insulation. When the 400 V class motor is driven by the inverter, consider the following countermeasures:

- **Countermeasures**

(With induction motor)

It is recommended to take one of the following countermeasures:

(1) Rectifying the motor insulation and limiting the PWM carrier frequency according to the wiring length
For the 400 V class motor, use an insulation-enhanced motor.
Specifically,
- Order a "400 V class inverter-driven insulation-enhanced motor".
- For the dedicated motor such as the constant-torque motor and low-vibration motor, use an "inverter-driven dedicated motor".
- Set **Pr.72 PWM frequency selection** as indicated below according to the wiring length.

	Wiring length		
	50 m or shorter	**50 m to 100 m**	**Longer than 100 m**
Pr.72 PWM frequency selection	15 (14.5 kHz) or lower	9 (9 kHz) or lower	4 (4 kHz) or lower

上正科技有限公司
購買、維修 此手冊零組件
電話： 037-466333
Email: service@repair.tw.com
Line id: @zzzz
www.repair.tw.com

(2) Suppressing the surge voltage on the inverter side
- For the FR-A840-01800(55K) or lower, connect the surge voltage suppression filter (FR-ASF-H/FR-BMF-H) to the output side.
- For the FR-A840-02160(75K) or higher, connect the sine wave filter (MT-BSL/BSC) to the output side.

(With PM motor)

- When the wiring length exceeds 50 m, set "9" (6 kHz) or less in **Pr.72 PWM frequency selection**.

REMARKS

- For the details of **Pr.72 PWM frequency selection**, refer to page 270. (When using an optional sine wave filter (MT-BSL/BSC), set "25" (2.5 kHz) in **Pr.72**.)
- For the details of the surge voltage suppression filter (FR-ASF-H/FR-BMF-H) and the sine wave filter (MT-BSL/BSC), refer to the Instruction Manual of each option.
- A surge voltage suppression filter (FR-ASF-H/FR-BMF-H) can be used under V/F control and Advanced magnetic flux vector control. A sine wave filter (MT-BSL/BSC) can be used under V/F control. Do not use the filters under different control modes.
- The carrier frequency is limited during PM sensorless vector control.(Refer to page 270.)

3.6 Checklist before starting operation

The FR-A800 series inverter is a highly reliable product, but incorrect peripheral circuit making or operation/handling method may shorten the product life or damage the product.
Before starting operation, always recheck the following points.

Checkpoint	Countermeasure	Refer to page	Check by user
Crimping terminals are insulated.	Use crimping terminals with insulation sleeves to wire the power supply and the motor.	-	
The wiring between the power supply (R/L1, S/L2, T/L3) and the motor (U, V, W) is correct.	Application of power to the output terminals (U, V, W) of the inverter will damage the inverter. Never perform such wiring.	37	
No wire offcuts are left from the time of wiring.	Wire offcuts can cause an alarm, failure or malfunction. Always keep the inverter clean. When drilling mounting holes in an enclosure etc., take caution not to allow chips and other foreign matter to enter the inverter.	-	
The main circuit cable gauge is correctly selected.	Use an appropriate cable gauge to suppress the voltage drop to 2% or less. If the wiring distance is long between the inverter and motor, the voltage drop in the main circuit will cause the motor torque to decrease especially during the output of a low frequency.	41	
The total wiring length is within the specified length.	Keep the total wiring length within the specified length. In long distance wiring, charging currents due to stray capacitance in the wiring may degrade the fast-response current limit operation or cause the equipment on the inverter's output side to malfunction. Pay attention to the total wiring length.	41	
Countermeasures are taken against EMI.	The input/output (main circuit) of the inverter includes high frequency components, which may interfere with the communication devices (such as AM radios) used near the inverter. In such case, activate the EMC filter (turn ON the EMC filter ON/OFF connector) to minimize interference.	86	
On the inverter's output side, there is no power factor correction capacitor, surge suppressor, or radio noise filter installed.	Such installation will cause the inverter to trip or the capacitor and surge suppressor to be damaged. If any of the above devices is connected, immediately remove it.	-	
When performing an inspection or rewiring on the product that has been energized, the operator has waited long enough after shutting off the power supply.	For a short time after the power-OFF, a high voltage remains in the smoothing capacitor, and it is dangerous. Before performing an inspection or rewiring, wait 10 minutes or longer after the power supply turns OFF, then confirm that the voltage across the main circuit terminals P/+ and N/- of the inverter is 30 VDC or less using a tester, etc.	-	
The inverter's output side has no short circuit or ground fault occurring.	• A short circuit or ground fault on the inverter's output side may damage the inverter module. • Fully check the insulation resistance of the circuit prior to inverter operation since repeated short circuits caused by peripheral circuit inadequacy or a ground fault caused by wiring inadequacy or reduced motor insulation resistance may damage the inverter module. • Fully check the to-earth (ground) insulation and phase-to-phase insulation of the inverter's output side before power-ON. Especially for an old motor or use in hostile atmosphere, make sure to check the motor insulation resistance, etc.	-	
The circuit is not configured to use the inverter's input-side magnetic contactor to start/stop the inverter frequently.	Since repeated inrush currents at power ON will shorten the life of the converter circuit, frequent starts and stops of the magnetic contactor must be avoided. Turn ON/OFF the inverter's start signals (STF, STR) to run/stop the inverter.	91	
A mechanical brake is not connected across terminals P/+ and PR.	Across terminals P/+ and PR, connect only an external brake resistor.	71	
The voltage applied to the inverter I/O signal circuits is within the specifications.	Application of a voltage higher than the permissible voltage to the inverter I/O signal circuits or opposite polarity may damage the I/O devices. Especially check the wiring to prevent the speed setting potentiometer from being connected incorrectly to short circuit the terminals 10E and 5.	45	

上洋技術有限公司 購買、維修、咨詢零部件 電話：037-466333 email：service@repairtw.com Line id：@jzzz www.repairtw.com

Checklist before starting operation

Checkpoint	Countermeasure	Refer to page	Check by user
When using the electronic bypass operation, electrical and mechanical interlocks are provided between the electronic bypass contactors MC1 and MC2.	When using a switching circuit as shown below, chattering due to mis-configured sequence or arc generated at switching may allow undesirable current to flow in and damage the inverter. Mis-wiring may also damage the inverter. (The commercial power supply operation is not available with vector control dedicated motors (SF-V5RU, SF-THY) nor with PM motors.) 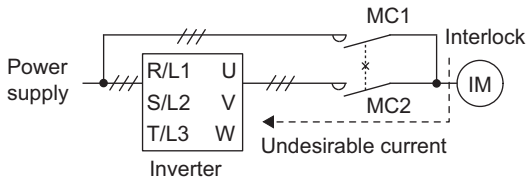 If switching to the commercial power supply operation while a failure such as an output short circuit has occurred between the magnetic contactor MC2 and the motor, the damage may further spread. If a failure has occurred between the MC2 and the motor, a protection circuit such as using the OH signal input must be provided.	450	
A countermeasure is provided for power restoration after a power failure.	If the machine must not be restarted when power is restored after a power failure, provide an MC in the inverter's input side and also make up a sequence which will not switch ON the start signal. If the start signal (start switch) remains ON after a power failure, the inverter will automatically restart as soon as the power is restored.	-	
When using vector control, the encoder is properly installed.	The encoder must be directly connected to a motor shaft without any backlash. (Real sensorless vector control, PM sensorless vector control do not require an encoder.)	62	
A magnetic contactor (MC) is installed on the inverter's input side.	On the inverter's input side, connect an MC for the following purposes: • To disconnect the inverter from the power supply at activation of a protective function or at malfunctioning of the driving system (emergency stop, etc.). • To prevent any accident due to an automatic restart at power restoration after an inverter stop made by a power failure. • To separate the inverter from the power supply to ensure safe maintenance and inspection work. If using an MC for emergency stop during operation, select an MC regarding the inverter input side current as JEM1038-AC-3 class rated current.	91	
The magnetic contactor on the inverter's output side is properly handled.	Switch the magnetic contactor between the inverter and motor only when both the inverter and motor are at a stop.	91	
When using a PM motor, a low-voltage manual contactor is installed on the inverter's output side.	When a failure occurs between the MC2 and motor, make sure to provide a protection circuit, such as using the OH signal input. In an application, such as fan and blower, where the motor is driven by the load, a low-voltage manual contactor must be connected at the inverter's output side, and wiring and inspection must be performed while the contactor is open. Otherwise you may get an electric shock.	91	
An EMI countermeasure is provided for the frequency setting signals.	If electromagnetic noise generated from the inverter causes frequency setting signal to fluctuate and the motor rotation speed to be unstable when changing the motor speed with analog signals, the following countermeasures are effective: • Do not run the signal cables and power cables (inverter I/O cables) in parallel with each other and do not bundle them. • Run signal cables as far away as possible from power cables (inverter I/O cables). • Use shielded cables. • Install a ferrite core on the signal cable (Example: ZCAT3035-1330 by TDK).	84	
A countermeasure is provided for an overload operation.	When performing frequent starts/stops by the inverter, rise/fall in the temperature of the transistor element of the inverter will repeat due to a repeated flow of large current, shortening the life from thermal fatigue. Since thermal fatigue is related to the amount of current, the life can be increased by reducing current at locked condition, starting current, etc. Reducing current may extend the service life but may also cause torque shortage, which leads to a start failure. Adding a margin to the current can eliminate such a condition. For an induction motor, use an inverter of a higher capacity (up to two ranks). For a PM motor, use an inverter and PM motor of higher capacities.	-	
The specifications and rating match the system requirements.	Make sure that the specifications and rating match the system requirements.	670	

上正科技有限公司
購買、維修 此手冊零組件
電話： 037-466332
Email: service@repairtw.com
Line id: @zzzz
www.repairtw.com

3.7 Failsafe system which uses the inverter

When a fault is detected by the protective function, the protective function activates and outputs a fault signal. However, a fault signal may not be output at an inverter's fault occurrence when the detection circuit or output circuit fails, etc. Although Mitsubishi assures the best quality products, provide an interlock which uses inverter status output signals to prevent accidents such as damage to the machine when the inverter fails for some reason. Also at the same time consider the system configuration where a failsafe from outside the inverter, without using the inverter, is enabled even if the inverter fails.

(1) Interlock method which uses the inverter status output signals

By combining the inverter output signals to provide an interlock as shown below, an inverter failure can be detected.

No.	Interlock method	Check method	Used signals	Refer to page
a	Inverter protective function operation	Operation check of an alarm contact. Circuit error detection by negative logic.	Fault output signal (ALM signal)	377
b	Inverter operating status	Operation ready signal check.	Operation ready signal (RY signal)	375
c	Inverter running status	Logic check of the start signal and running signal.	Start signal (STF signal, STR signal) Running signal (RUN signal)	375, 422
d	Inverter running status	Logic check of the start signal and output current.	Start signal (STF signal, STR signal) Output current detection signal (Y12 signal)	381, 422

(a) Checking by the output of the inverter fault signal

When the inverter's protective function activates and the inverter trips, the fault output signal (ALM signal) is output. (ALM signal is assigned to terminal A1B1C1 in the initial setting).

With this signal, check that the inverter operates properly.

In addition, negative logic can be set. (ON when the inverter is normal, OFF when the fault occurs.)

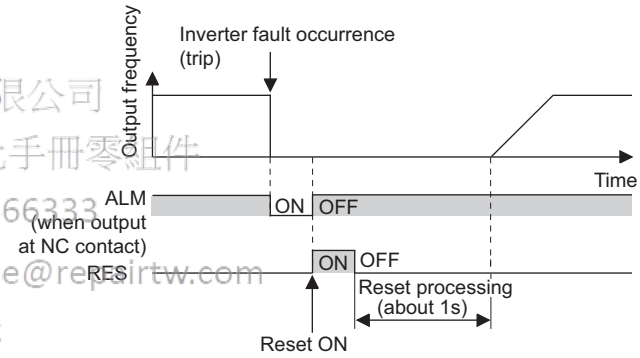

(b) Checking the inverter operating status by the inverter operation ready completion signal

Operation ready signal (RY signal) is output when the inverter power is ON and the inverter becomes operative. Check if the RY signal is output after powering ON the inverter.

(c) Checking the inverter operating status by the start signal input to the inverter and inverter running signal

The inverter running signal (RUN signal) is output when the inverter is running. (RUN signal is assigned to terminal RUN in the initial setting.)

Check if RUN signal is being output while inputting a start signal to the inverter. (STF signal is a forward rotation signal, and STR is a reverse rotation signal.) Even after the start signal is turned OFF, the RUN signal is kept output until the inverter makes the motor to decelerate and to stop. For the logic check, configure a sequence considering the inverter's deceleration time.

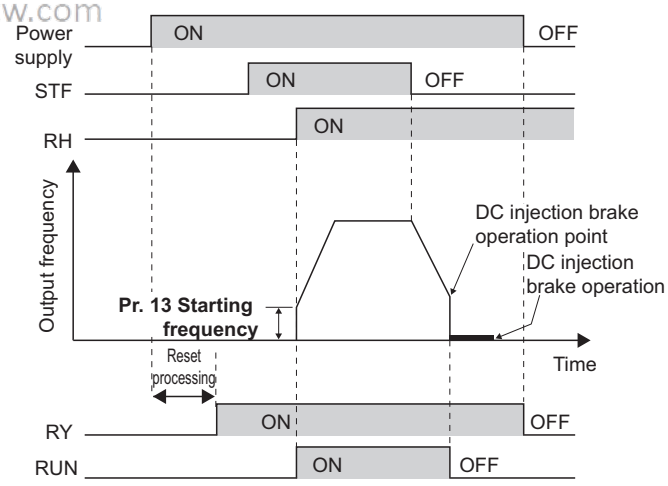

上下科技有限公司 購買、維修 此手冊零組件 電話： 03-466333 Email: service@repairtw.com Line id: @zzzz www.repairtw.com

(d) Checking the motor operating status by the start signal input to the inverter and inverter output current detection signal

The output current detection signal (Y12 signal) is output when the inverter operates and currents flows into the motor. Check if Y12 signal is being output while inputting a start signal to the inverter. (STF signal is a forward rotation signal, and STR is a reverse rotation signal.) The Y12 signal is initially set to be output at 150% rated inverter current. Adjust the level to around 20% using no load current of the motor as reference with **Pr.150 Output current detection level**. Like the inverter running signal (RUN signal), even after the start signal is turned OFF, the Y12 signal is kept output until the inverter stops the output to a decelerating motor. For the logic check, configure a sequence considering the inverter's deceleration time.

Output signal	Pr.190 to Pr.196 setting	
	Positive logic	Negative logic
ALM	99	199
RY	11	111
RUN	0	100
Y12	12	112

- When using various signals, assign the functions to **Pr.190 and Pr.196 (output terminal function selection)** referring to the table on the left.

REMARKS

- Changing the terminal assignment using **Pr.190 and Pr.196 (output terminal function selection)** may affect the other functions. Set parameters after confirming the function of each terminal.

(2) Backup method outside the inverter

Even if the interlock is provided by the inverter status signal, enough failsafe is not ensured depending on the failure status of the inverter itself. For example, if an inverter CPU fails in a system interlocked with the inverter's fault, start, and RUN signals, no fault signal will be output and the RUN signal will be kept ON because the inverter CPU is down.
Provide a speed detector to detect the motor speed and current detector to detect the motor current and consider the backup system such as performing a check as below according to the level of importance of the system.

上正科技有限公司
購買、維修 此手冊零組件
電話： 037-466333
Email: service@repairtw.com
Line id: @zzzz
www.repairtw.com

(a) Start signal and actual operation check

Check the motor running and motor current while the start signal is input to the inverter by comparing the start signal to the inverter and detected speed of the speed detector or detected current of the current detector. Note that the current is flowing through the motor while the motor coasts to stop, even after the inverter's start signal is turned OFF. For the logic check, configure a sequence considering the inverter's deceleration time. In addition, it is recommended to check the three-phase current when using the current detector.

(b) Command speed and actual operation check

Check for a gap between the actual speed and commanded speed by comparing the inverter's speed command and the speed detected by the speed detector.

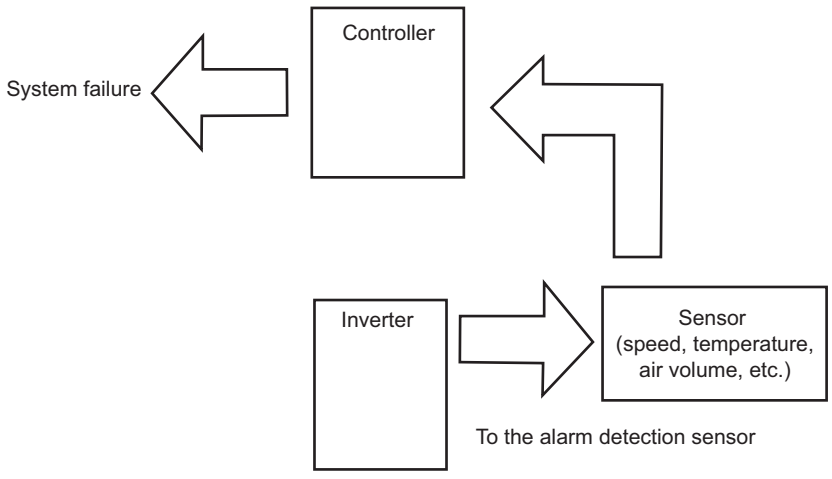

4 BASIC OPERATION

This chapter explains the "BASIC OPERATION" of this product.
Always read the instructions before using the equipment.

4.1 Operation panel (FR-DU08) 98
4.2 Monitoring the inverter status 102
4.3 Easy operation mode setting (easy setting mode) 103
4.4 Frequently-used parameters (simple mode parameters) 104
4.5 Basic operation procedure (PU operation) 106
4.6 Basic operation procedure (External operation) 111
4.7 Basic operation procedure (JOG operation) 118

上正科技有限公司
購買、維修 此手冊零組件
電話： 037-466333
Email service@repairtw.com
Line id Repair
www.repairtw.com

4.1 Operation panel (FR-DU08)

4.1.1 Components of the operation panel (FR-DU08)

To mount the operation panel (FR-DU08) on the enclosure surface, refer to page 59.

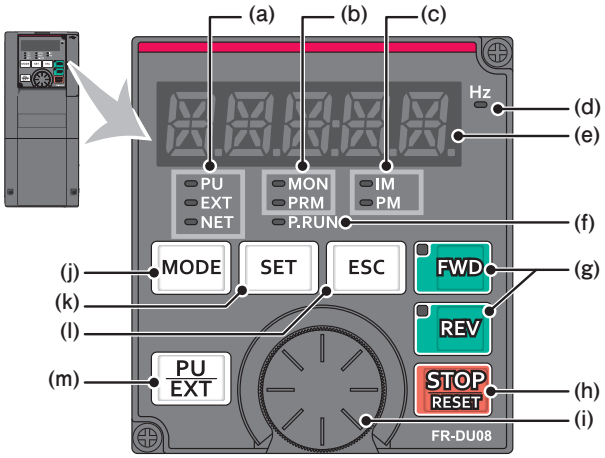

No.	Component	Name	Description
(a)	PU EXT NET	Operation mode indicator	PU: ON to indicate the PU operation mode. EXT: ON to indicate the External operation mode. (ON at power-ON in the initial setting.) NET: ON to indicate the Network operation mode. PU and EXT: ON to indicate the External/PU combined operation mode 1 or 2.
(b)	MON PRM	Operation panel status indicator	MON: ON to indicate the monitoring mode. Quickly flickers twice intermittently while the protective function is activated. Slowly flickers in the display-off mode. PRM: ON to indicate the parameter setting mode.
(c)	IM PM	Control motor indicator	IM: ON to indicate the induction motor control. PM: ON to indicate the PM sensorless vector control. The indicator flickers when test operation is selected.
(d)	Hz	Frequency unit indicator	ON to indicate frequency. (Flickers when the set frequency is displayed in the monitor.)
(e)	8.8.8.8.8.	Monitor (5-digit LED)	Shows the frequency, parameter number, etc. (Using **Pr.52**, **Pr.774 to Pr.776**, the monitored item can be changed.)
(f)	P.RUN	PLC function indicator	ON to indicate that the sequence program can be executed.
(g)	FWD REV	FWD key, REV key	FWD key: Starts forward rotation. The LED is on during forward operation. REV key: Starts reverse rotation. The LED is on during reverse operation. The LED flickers under the following conditions. • When the frequency command is not given even if the forward/reverse command is given. • When the frequency command is the starting frequency or lower. • When the MRS signal is being input.
(h)	STOP RESET	STOP/RESET key	Stops the operation commands. Resets the inverter when the protection function is activated.
(i)		Setting dial	The setting dial of the Mitsubishi inverters. The setting dial is used to change the frequency and parameter settings. Press the setting dial to perform the following operations: • To display a set frequency in the monitoring mode (the setting can be changed using **Pr.992**.) • To display the present setting during calibration • To display a fault history number in the faults history mode
(j)	MODE	MODE key	Switches to different modes. Switches to the easy setting mode by pressing simultaneously with PU EXT. Holding this key for 2 seconds locks the operation. The key lock is invalid when **Pr.161**="0 (initial setting)". (Refer to page 256.)
(k)	SET	SET key	Enters each setting. If pressed during operation, the monitored item changes. When the initial setting is set: Output frequency → Output current → Output voltage (Using **Pr.52** and **Pr.774-Pr.776**, the monitored item can be changed.)
(l)	ESC	ESC key	Goes back to the previous display. Holding this key for a longer time changes the mode back to the monitor mode.
(m)	PU EXT	PU/EXT key	Switches between the PU mode and the External operation mode. Switches to the easy setting mode by pressing simultaneously with MODE. Cancels the PU stop also.

Email: service@repairtw.com
www.repairtw.com

4.1.2 Basic operation of the operation panel

(1) Basic operation

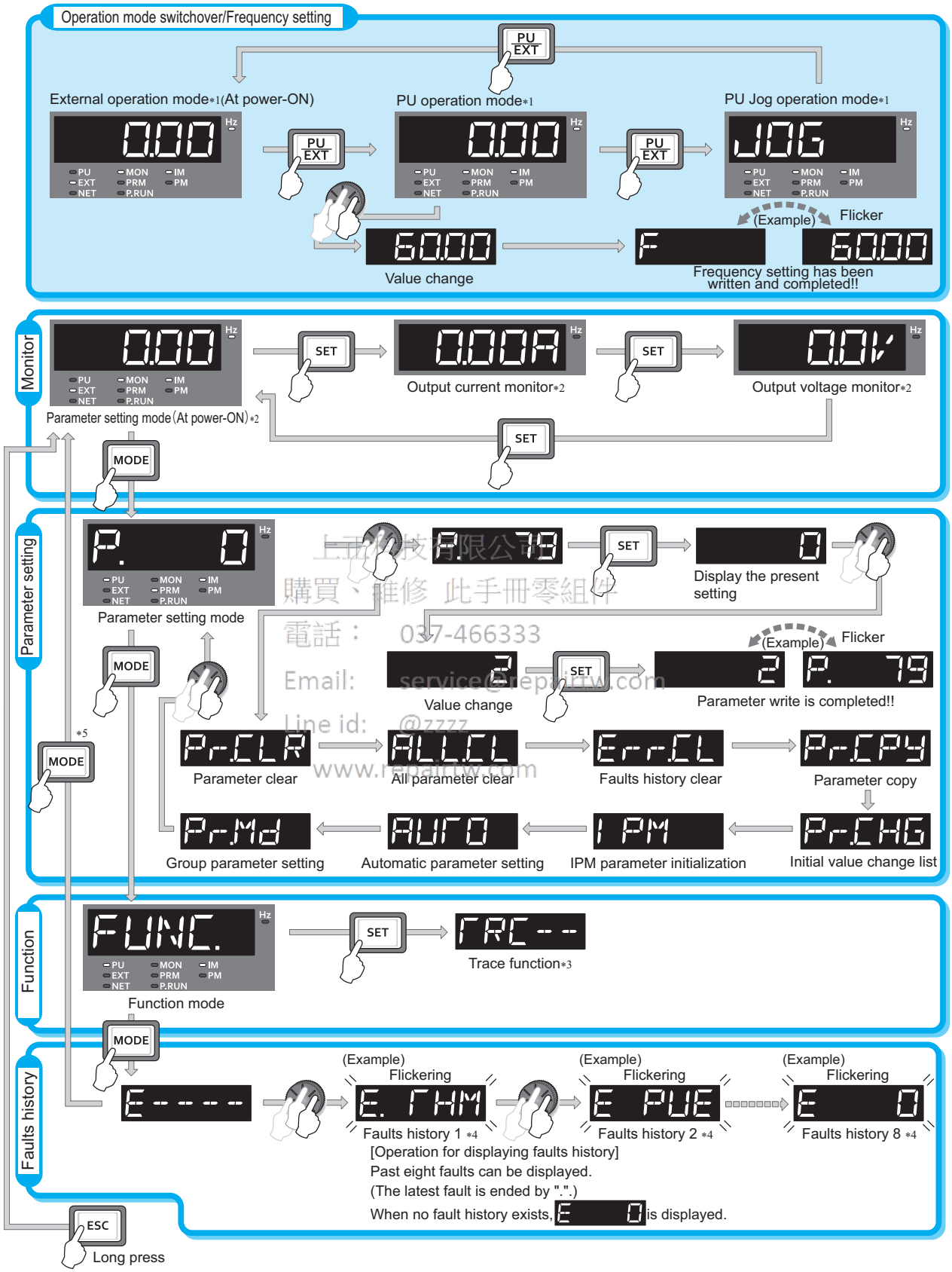

*1 For the details of operation modes, refer to page 299.

*2 Monitored items can be changed.(Refer to page 346.)

*3 For the details of the trace function, refer to page 529.

*4 For the details of faults history, refer to page 623.

*5 The USB memory mode will appear if a USB memory device is connected. (Refer to page 60.)

(2) Parameter setting mode

In the parameter setting mode, inverter functions (parameters) are set.
The following table explains the indications in the parameter setting mode.

Operation panel indication	Function name	Description	Refer to page
P.	Parameter setting mode	Under this mode, the set value of the displayed parameter number is read or changed.	101
Pr.CLR	Parameter clear	Clears and resets parameter settings to the initial values. Calibration parameters and offline auto tuning parameters are not cleared. The communication parameters are not cleared. For the details of the uncleared parameters, refer to page 691.	608
ALL.CL	Parameter all clear	Clears and resets parameter settings to the initial values. Calibration parameters and the offline auto tuning parameters are also cleared. The communication parameters are not cleared. For the details of the uncleared parameters, refer to page 691.	608
Err.CL	Faults history clear	Deletes the faults history.	619
Pr.CPY	Parameter copy	Copies the parameter settings saved in the inverter to the operation panel. The parameters copied to the operation panel can be also copied to other inverters.	609
Pr.CHG	Initial value change list	Identifies the parameters that have been changed from their initial settings.	615
IPM	IPM initialization	Changes the parameters to the settings required to drive an IPM motor (MM-CF) as a batch. Also changes the parameters back to the settings required to drive an induction motor.	169
AUTO	Automatic parameter setting	Changes parameter settings as a batch. The target parameters include communication parameters for the Mitsubishi's human machine interface (GOT) connection and the parameters for the rated frequency settings of 50 Hz/60 Hz.	264
Pr.Md	Group parameter setting	Displays parameter numbers by function groups.	144

上正科技有限公司
購買、維修 此手冊零組件
電話： 037-466333
Email: service@repairtw.com
Line id: @zzzz
www.repairtw.com

4.1.3 Correspondences between digital and actual characters

There are the following correspondences between the actual alphanumeric characters and the digital characters displayed on the operation panel:

0	1	2	3	4	5	6	7	8	9	A	B(b)	C	c	D(d)
0	1	2	3	4	5	6	7	8	9	A	b	C	c	d
E(e)	F(f)	G(g)	H(h)	I(i)	J(j)	K(k)	L(l)	M(m)	N	n	O	o	P(p)	Q(q)
E	F	G	H	I	J	K	L	M	N	n	O	o	P	Q
R	r	S(s)	T(t)	U	u	V	v	W	w	X(x)	Y(y)	Z(z)		
R	r	S	T	U	u	V	v	W	w	X	Y	Z		

4.1.4 Changing the parameter setting value

Changing example **Change the Pr.1 Maximum frequency.**

Operation

1. Screen at power-ON
The monitor display appears.

2. Changing the operation mode
Press PU/EXT to choose the PU operation mode. [PU] indicator is on.

3. Parameter setting mode
Press MODE to choose the parameter setting mode. (The parameter number read previously appears.)

4. Selecting the parameter number
Turn the dial until P.1 (Pr.1) appears. Press SET to read the present set value.
"120.00" (initial value) appears.

5. Changing the setting value
Turn the dial to change the set value to "60.00". Press SET to enter the setting.
"60.00" and "P.1" flicker alternately.

- Turn the dial to read another parameter.
- Press SET to show the setting again.
- Press SET twice to show the next parameter.
- Press MODE twice to return to the monitor display of the frequency.

上正科技有限公司
購買、維修 此手冊零組件
電話： 037-466333
Email: service@repairtw.com
Line id: @zzzz
www.repairtw.com

? Er.1 to Er.4 are displayed... Why?

☞ Er.1 appears.....Write disable error
Er.2 appears.....Write error during operation
Er.3 appears.....Calibration error
Er.4 appears.....Mode designation error
For details, refer to page 623.

POINT

When **Pr.77 Parameter write selection**="0 (initial setting)", the parameter setting change is only available while the inverter is stopped under the PU operation mode.
To enable the parameter setting change while the inverter is running or under the operation mode other than PU operation mode, change the **Pr.77** setting. (Refer to page 260)

4.2 Monitoring the inverter status

4.2.1 Monitoring of output current and output voltage

POINT

Pressing SET in the monitor mode switches the monitored item to output frequency, output current, and then to output voltage.

Operation

1. Press MODE during operation to monitor the output frequency. [Hz] indicator turns ON.
2. Press SET to monitor the output current. This operation is valid during running or stopping under any operation mode. [A] appears.
3. Press SET to monitor the output voltage. [V] appears.

REMARKS

- Other monitored items, such as output voltage and set frequency, are also available. Use **Pr.52** to change the setting. (Refer to page 346.)

4.2.2 First monitored item

The first monitored item to be displayed in the monitor mode is selectable.

To set a monitored item as the first monitored item, display a monitored item, and press SET for a while.

Changing example **Set the output current as the first monitored item.**

Operation

1. Select the monitor mode, and select the output current.
2. Press SET for a while (1 s). The output current is set as the first monitored item.
3. When the monitor mode is selected next time, the output current is monitored first.

REMARKS

- Use **Pr.774 Operation panel monitor selection 1** to change the monitored item. (Refer to page 346.)

4.2.3 Displaying the set frequency

In the PU operation mode or in the External/PU combined operation mode 1( ) (**Pr.79 Operation mode selection** ="3"), select the monitor mode, and then press the setting dial. The present set frequency is displayed.

REMARKS

- Use **Pr.992 Operation panel setting dial push monitor selection** to change the displayed indication. (Refer to page 346.)

三征科技有限公司
購買、維修此手冊零組件
電話： 037-466333
Email: service@repairtw.com
Line id: @repairtw
www.repairtw.com

4.3 Easy operation mode setting (easy setting mode)

A required combination of a start command and a frequency command can be easily selected using **Pr.79 Operation mode selection**.

Changing example **Operate with the external (STF/STR) start command and**  **frequency command.**

Operation

1. Press PU/EXT and MODE for 0.5 s.



2. Turn  until 79- - 3 (External/PU combined operation mode 1) appears. (For other settings, refer to the table below.)



3. Press SET to enter the setting. External/PU combined operation mode 1 (**Pr.79**="3") is set.

Operation panel indication	Operation method		Operation mode
	Start command	Frequency command	
Flickering 79- - 1	FWD, REV	 *1	PU operation mode
Flickering 79- - 2	External (STF, STR)	Analog voltage input	External operation mode
Flickering 79- - 3	External (STF, STR)	 *1	External/PU combined operation mode 1
Flickering 79- - 4	FWD, REV	Analog voltage input	External/PU combined operation mode 2

上正科技有限公司
購買・維修・此手冊零組件
電話: 037466333
Email: service@repairtw.com
Line id: @zzzz
www.repairtw.com

*1 To use  as a potentiometer, refer to page 256.

REMARKS

- Er 1 is displayed... Why?
  -**Pr.79** may not be included in the user group set by **Pr.160 User group read selection** ="1".
- Er 2 is displayed... Why?
  -Setting cannot be changed during operation.Turn the start command (FWD or REV, STF or STR) OFF.
- If MODE is pressed before pressing SET, the easy setting mode is terminated and the display goes back to the monitor display.If the easy setting mode is terminated while **Pr.79** ="0 (initial value)", the operation mode switches between the PU operation mode and the External operation mode. Check the operation mode.
- Reset by STOP RESET is enabled.
- The priorities of the frequency commands when **Pr.79** = "3" are "Multi-speed operation (RL/RM/RH/REX) > PID control (X14) > terminal 4 analog input (AU) > digital input from the operation panel".

4.4 Frequently-used parameters (simple mode parameters)

Parameters that are frequently used for the FR-A800 series are grouped as simple mode parameters.
When **Pr.160 User group read selection**="9999", only the simple mode parameters are displayed.
This section explains about frequently-used parameters.

4.4.1 Simple mode parameter list

For simple variable-speed operation of the inverter, the initial values of the parameters may be used as they are. Set the necessary parameters to meet the load and operational specifications. Parameter setting, change and check can be performed from the operation panel (FR-DU08).

POINT

Pr.160 User group read selection can narrow down the displayed parameters to only the simple mode parameters. (In the initial setting, all parameters are displayed.) Set **Pr.160 User group read selection** as required. (For the parameter change, refer to page 101.)

Pr.160 setting	Description
9999	Displays only the simple mode parameters.
0 (initial value)	Displays simple mode + extended parameters.
1	Displays parameters registered in the user group.

上正科技有限公司
購買、維修 此手冊零組件
電話: 037-406333
Email: service@repairtw.com
Line id: @zzzz
www.repairtw.com

Pr.	Pr. group	Name	Unit	Initial value *11 FM	Initial value *11 CA	Range	Application	Refer to page
0	G000	Torque boost	0.1%	6%*1 4%*2 3%*3 2%*4 1%*5		0 to 30%	Set this parameter to obtain a higher starting torque under V/F control. Also set this when a loaded motor cannot be driven and the warning [OL] occurs, then the inverter trips with [OC1].	577
1	H400	Maximum frequency	0.01 Hz	120 Hz*6 60 Hz*7		0 to 120 Hz	Sets the upper limit for the output frequency.	334
2	H401	Minimum frequency	0.01 Hz	0Hz		0 to 120 Hz	Sets the lower limit for the output frequency.	
3	G001	Base frequency	0.01 Hz	60 Hz	50 Hz	0 to 590 Hz	Set this parameter when the rated motor frequency is 50 Hz. Check the rating plate of the motor.	578
4	D301	Multi-speed setting (high speed)	0.01 Hz	60 Hz	50 Hz	0 to 590 Hz	Pre-sets the speeds that will be switched among by terminals.	108, 113, 319
5	D302	Multi-speed setting (middle speed)	0.01 Hz	30 Hz		0 to 590 Hz		
6	D303	Multi-speed setting (low speed)	0.01 Hz	10 Hz		0 to 590 Hz		
7	F010	Acceleration time	0.1 s	5 s*9 15 s*10		0 to 3600 s	Sets the acceleration time.	278
8	F011	Deceleration time	0.1 s	5 s*9 15 s*10		0 to 3600 s	Sets the deceleration time.	
9	H000 C103	Electronic thermal O/L relay	0.01 A*6 0.1 A*7	Rated inverter current*8		0 to 500 A*6 0 to 3600 A*7	Protects the motor from heat. Set the rated motor current.	322
79	D000	Operation mode selection	1	0		0 to 4, 6, 7	Select the start and frequency command sources.	299
125	T022	Terminal 2 frequency setting gain frequency	0.01 Hz	60 Hz	50 Hz	0 to 590 Hz	Allows the frequency at the maximum potentiometer setting (5 V in the initial setting) to be changed.	115, 400

Pr.	Pr. group	Name	Unit	Initial value *11		Range	Application	Refer to page
				FM	CA			
126	T042	Terminal 4 frequency setting gain frequency	0.01 Hz	60 Hz	50 Hz	0 to 590 Hz	Allows the frequency at the maximum current input (20 mA in the initial setting) to be changed.	117, 400
160	E440	User group read selection	1	0		0, 1, 9999	Restricts the parameters that are read by the operation panel and parameter unit.	268
998	E430	PM parameter initialization	1	0		0, 3003, 3103, 8009, 8109, 9009, 9109	Selects the PM sensorless vector control and set the parameters that are required to drive an PM motor.	169
999	E431	Automatic parameter setting	1	9999		1, 2, 10, 11, 12, 13, 20, 21, 30, 31, 9999	Changes parameter settings as a batch. The target parameters include communication parameters for the Mitsubishi's human machine interface (GOT) connection and the parameters for the rated frequency settings of 50 Hz/60 Hz.	264

*1 Initial value for the FR-A820-00077(0.75K) or lower and FR-A840-00038(0.75K) or lower.
*2 Initial value for the FR-A820-00105(1.5K) to FR-A820-00250(3.7K) and the FR-A840-00052(1.5K) to FR-A840-00126(3.7K).
*3 Initial value for the FR-A820-00340(5.5K), FR-A820-00490(7.5K), FR-A820-00340(5.5K), and FR-A840-00250(7.5K).
*4 Initial value for the FR-A820-00630(11K) to FR-A820-03160(55K), FR-A820-00630(11K) to FR-A840-01800(55K).
*5 Initial value for the FR-A820-03800(75K) or higher and FR-A840-02160(75K) or higher.
*6 For the FR-A820-03160(55K) or lower and FR-A840-01800(55K) or lower.
*7 For the FR-A820-03800(75K) or higher and FR-A840-02160(75K) or higher.
*8 The initial value for the FR-A820-00077(0.75K) or lower and FR-A840-00038(0.75K) or lower is set to the 85% of the rated inverter current.
*9 Initial value for the FR-A820-00490(7.5K) or lower and FR-A840-00250(7.5K) or lower.
*10 Initial value for the FR-A820-00630(11K) or higher and FR-A840-00310(11K) or higher.
*11 FM denotes the initial value for the FM type inverter that has the terminal FM, and CA denotes the initial value for the CA type inverter that has the terminal CA.

上順科技有限公司
購買、維修 此手冊零組件
電話： 037-466333
Email: service@repairtw.com
Line id: @zzzz
www.repairtw.com

4.5 Basic operation procedure (PU operation)

POINT

Where is the frequency command source?
-The frequency set in the frequency setting mode of the operation panel → Refer to 4.5.1. (Refer to **page 106**.)
-The setting dial used as the potentiometer → Refer to 4.5.2. (Refer to **page 107**.)
-The ON/OFF switches connected to terminals → Refer to 4.5.3. (Refer to **page 108**.)
-Voltage input signals → Refer to 4.5.4. (Refer to **page 109**.)
-Current input signals → Refer to 4.5.5. (Refer to **page 110**.)

4.5.1 Operating at a set frequency (example: operating at 30 Hz)

POINT

Use the operation panel (FR-DU08) to give a start command and a frequency command. (PU operation)

Operation panel
(FR-DU08)



上正科技有限公司
購買、維修 此手冊零組件
電話： 037-466333
Email: service@repairtw.com
Line id: @zzzz
www.repairtw.com

Operation example **Operate at 30 Hz.**

	Operation
1.	Screen at power-ON The monitor display appears.
2.	Changing the operation mode Press [PU EXT] to choose the PU operation mode. [PU] indicator is on.
3.	Setting the frequency Turn ⊛ until the target frequency, "30.00" (30.00 Hz), appears. The frequency flickers for about 5 s. While the value is flickering, press [SET] to enter the frequency. "F" and "30.00" flicker alternately. After about 3 s of flickering, the indication goes back to "0.00" (monitor display). (If [SET] is not pressed, the indication of the value goes back to "0.00" (0.00 Hz) after about 5 s of flickering.In that case, turn ⊛ again and set the frequency.)
4.	Start → acceleration → constant speed Press [FWD] or [REV] to start running. The frequency value on the indication increases in **Pr.7 Acceleration time,** and "30.00" (30.00 Hz) appears. (To change the set frequency, perform the operation in above step 3. The previously set frequency appears.)
5.	Deceleration → stop Press [STOP RESET] to stop. The frequency value on the indication decreases in **Pr.8 Deceleration time,** and the motor stops rotating with "0.00" (0.00 Hz) displayed.

REMARKS

- To display the set frequency under PU operation mode or External/PU combined operation mode 1 (**Pr.79** = "3"), press . (Refer to page 346.)
- can also be used like a potentiometer to perform operation. (Refer to page 107.)

♦Parameters referred to♦

Pr.7 Acceleration time, Pr.8 Deceleration time ☞page 278
Pr.79 Operation mode selection ☞page 299

4.5.2 Using the setting dial like a potentiometer to perform operation

POINT

Set **Pr.161 Frequency setting/key lock operation selection** ="1" (setting dial potentiometer).

Operation example **Change the frequency from 0 Hz to 60 Hz during operation**

Operation

1.	Screen at power-ON The monitor display appears.
2.	Changing the operation mode Press PU EXT to choose the PU operation mode. [PU] indicator is on.
3.	Changing the parameter setting Change **Pr.161** setting to "1". (For setting value change, refer to page 101.)
4.	Start Press FWD or REV to start the inverter operation.
5.	Setting the frequency Turn " " until "60.00" appears. The set frequency flickers. (The frequency flickers for about 5 s.) SET needs not to be pressed.

上正科技有限公司 購買、維修 此手冊零組件 電話： 037-466333 Email: service@repairtw.com Line id: @zzzz www.repairtw.com

REMARKS

- If the display changes from flickering "60.00" to "0.00", **Pr.161 Frequency setting/key lock operation selection** may be set to a value other than "1".
- Simply turning will enable frequency setting whether the inverter is running or at a stop.
- The newly-set frequency will be saved as the set frequency in EEPROM after 10 s.
- With the setting dial, the frequency can go up to the setting value of **Pr.1 Maximum frequency**. Check the **Pr.1 Maximum frequency** setting, and adjust the setting according to the application.

♦Parameters referred to♦

Pr.1 Maximum frequency ☞page 334
Pr.161 Frequency setting/key lock operation selection ☞page 256

4.5.3 Setting the frequency by switches (multi-speed setting)

POINT

- Use the operation panel (FR-DU08) (FWD or REV) to give a start command.
- Turn ON the RH, RM, or RL signal to give a frequency command. (multi-speed setting)
- Set **Pr.79 Operation mode selection**="4" (External/PU combination operation mode 2).

[Connection diagram]

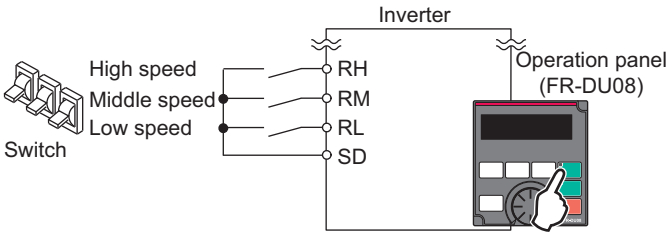

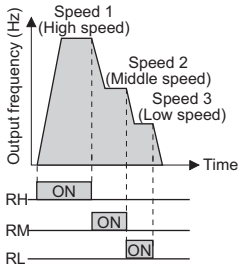

Operation example **Operate at a low-speed (10 Hz).**

Operation

1.	Screen at power-ON The monitor display appears.
2.	Changing the operation mode Set "4" in **Pr.79**. [PU] and [EXT] indicators are on. (For setting value change, refer to page 103.)
3.	Setting the frequency Turn ON the low-speed switch (RL).
4.	Start → acceleration → constant speed Press FWD or REV to start running. The frequency value on the indication increases in **Pr.7 Acceleration time**, and " 10.00 " (10.00 Hz) appears.
5.	Deceleration → stop Press STOP RESET to stop. The frequency value on the indication decreases in **Pr.8 Deceleration time,** and the motor stops rotating with " 0.00 " (0.00 Hz) displayed. Turn OFF the low-speed switch (RL).

上正科技有限公司
購買、維修 此手冊零組件
電話： 037-466333
Email: service@repairtw.com
Line id: @zzzz
www.repairtw.com

REMARKS

- The terminal RH is initially set to 60 Hz for the FM type inverter, and to 50 Hz for the CA type inverter. The terminal RM is set to 30 Hz, and the RL is set to 10 Hz. (To change, set **Pr.4, Pr.5, and Pr.6**.)
- In the initial setting, when two or more of multi-speed settings are simultaneously selected, priority is given to the set frequency of the lower signal.
  For example, when RH and RM signals turn ON, RM signal (**Pr.5**) has a higher priority.
- Maximum of 15-speed operation can be performed.

♦Parameters referred to♦

Pr.4 to Pr.6 (multi-speed setting) ☞ page 319
Pr.7 Acceleration time, Pr.8 Deceleration time ☞ page 278
Pr.79 Operation mode selection ☞ page 299

4.5.4 Setting the frequency with analog signals (voltage input)

POINT

- Use the operation panel (FR-DU08) (FWD or REV) to give a start command.
- Use the potentiometer (frequency setting potentiometer) to give a frequency command (by connecting it across terminals 2 and 5 (voltage input)).
- Set **Pr.79 Operation mode selection** = "4" (External/PU combination operation mode 2).

[Connection diagram] (The inverter supplies 5 V power to the frequency setting potentiometer (terminal 10).)

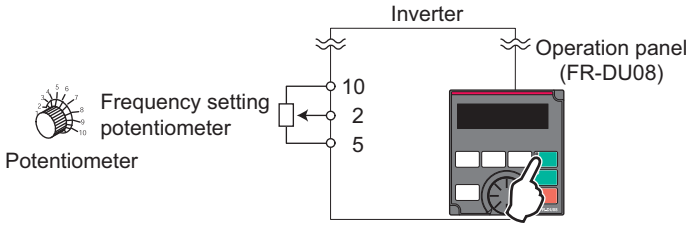

Operation example **Operate at 60 Hz.**

Operation

1.	Screen at power-ON The monitor display appears.
2.	Changing the operation mode Set "4" in **Pr.79**. [PU] and [EXT] indicators are on. (For setting value change, refer to page 101.)
3.	Start Press FWD or REV. [FWD] or [REV] flickers as no frequency command is given.
4.	Acceleration → constant speed Turn the potentiometer (frequency setting potentiometer) clockwise slowly to full. The frequency value on the indication increases in **Pr.7 Acceleration time**, and "60.00" (60.00 Hz) appears.
5.	Deceleration Turn the potentiometer (frequency setting potentiometer) counterclockwise slowly to full. The frequency value on the indication decreases in **Pr.8 Deceleration time**, and the motor stops rotating with "0.00" (0.00 Hz) displayed. [FWD] or [REV] indicator flickers.
6.	Stop Press STOP RESET. [FWD] or [REV] indicator turns OFF.

上正科技有限公司
購買、維修 此手冊零組件
電話： 037-466333
Email: service@repairtw.com
Line id: @zzzz
www.repairtw.com

REMARKS

- To change the frequency (60 Hz) at the maximum voltage input (initial value 5 V), adjust **Pr.125 Terminal 2 frequency setting gain frequency**.
- To change the frequency (0 Hz) at the minimum voltage input (initial value 0 V), adjust the **calibration parameter C2 Terminal 2 frequency setting bias frequency**.

♦Parameters referred to♦

Pr.7 Acceleration time, Pr.8 Deceleration time ☞page 278
Pr.79 Operation mode selection ☞page 299
Pr.125 Terminal 2 frequency setting gain frequency ☞page 400
C2(Pr.902) Terminal 2 frequency setting bias frequency ☞page 400

4.5.5 Using an analog signal (current input) to give a frequency command

POINT

- Use the operation panel (FR-DU08) (FWD or) REV to give a start command.
- Use the outputs from the current signal source (4 to 20 mA) to give a frequency command (by connecting it across terminals 4 and 5 (current input)).
- Turn ON the AU signal.
- Set **Pr.79 Operation mode selection** ="4" (External/PU combination operation mode 2).

[Connection diagram]

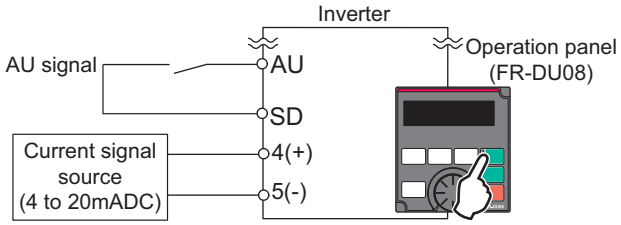

Operation example **Operate at 60 Hz.**

Operation

1.	Screen at power-ON The monitor display appears.
2.	Changing the operation mode Set "4" in **Pr.79**. [PU] and [EXT] indicators are on. (For setting value change, refer to page 101.)
3.	Terminal 4 input selection Turn ON the terminal 4 input selection signal (AU). Input to the terminal 4 is enabled.
4.	Start Press FWD or REV. [FWD] or [REV] flickers as no frequency command is given.
5.	Acceleration → constant speed Input 20 mA. The frequency value on the indication increases in **Pr.7 Acceleration time,** and "60.00" (60.00 Hz) appears.
6.	Deceleration Input 4 mA or less.The frequency value on the indication decreases in **Pr.8 Deceleration time,** and the motor stops rotating with "0.00" (0.00 Hz) displayed. [FWD] or [REV] indicator flickers.
7.	Stop Press STOP RESET. [FWD] or [REV] indicator turns OFF.

上正科技有限公司
購買、維修 此手冊零組件
電話： 037-466333
Email: service@repairtw.com
Line id: @zzzz
www.repairtw.com

REMARKS

- **Pr.184 AU terminal function selection** must be set to "4" (AU signal) (initial value).
- To change the frequency (60 Hz) at the maximum current input (initial value 20 mA), adjust **Pr.126 Terminal 4 frequency setting gain frequency**.
- To change the frequency (0 Hz) at the minimum current input (initial value 4 mA), **adjust the calibration parameter C5 Terminal 4 frequency setting bias frequency**.

♦Parameters referred to♦

Pr.7 Acceleration time, Pr.8 Deceleration time ☞page 278
Pr.79 Operation mode selection ☞page 299
Pr.126 Terminal 4 frequency setting gain frequency ☞page 400
Pr.184 AU terminal function selection ☞page 416
C5(Pr.904) Terminal 4 frequency setting bias frequency ☞page 400

4.6 Basic operation procedure (External operation)

POINT

- Where is the frequency command source?
  - The frequency set in the frequency setting mode of the operation panel → Refer to 4.6.1. (Refer to page 111.)
  - Switches (multi-speed setting) → Refer to 4.6.3. (Refer to page 114.)
  - Voltage input signals → Refer to 4.6.4. (Refer to page 115.)
  - Current input signals → Refer to 4.6.5. (Refer to page 116.)

4.6.1 Using the frequency set by the operation panel

POINT

- Switch ON the STF (STR) signal to give a start command.
- Use the operation panel (FR-DU08) ( ) to give a start command.
- Set **Pr.79** ="3" (External/PU combined operation mode 1).

[Connection diagram]

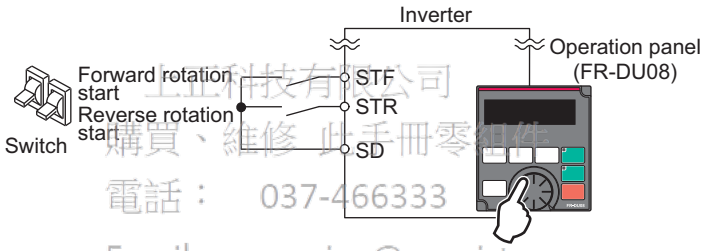

上亞科技有限公司
購買、維修 此手冊零組件
電話： 037-466333
Email: service@repairtw.com
Line id: @zzzz
www.repairtw.com

Operation example **Operate at 30 Hz.**

Operation

1. Changing the operation mode

Set "3" in **Pr.79**. [PU] and [EXT] indicators are on. (For setting value change, refer to page 101.)

2. Setting the frequency

Turn to until the target frequency, " 30.00 " (30.00 Hz), appears. The frequency flickers for about 5 s.

While the value is flickering, press SET to enter the frequency. " F " and " 30.00 " flicker alternately. After about 3 s of flickering, the indication goes back to " 0.00 " (monitor display).

(If SET is not pressed, the indication of the value goes back to " 0.00 " (0.00 Hz) after about 5 s of flickering. In that case, turn again and set the frequency.)

3. Start → acceleration → constant speed

Turn ON the start switch (STF or STR). The frequency value on the indication increases in **Pr.7 Acceleration time,** and " 30.00 " (30.00 Hz) appears. [FWD] indicator is on during the forward rotation, and [REV] indicator is on during the reverse rotation.

(To change the set frequency, perform the operation in above step 2. The previously set frequency appears.)

4. Deceleration → stop

Turn OFF the start switch (STF or STR). The frequency value on the indication decreases in **Pr.8 Deceleration time,** and the motor stops rotating with " 0.00 " (0.00 Hz) displayed.

REMARKS

- When both the forward rotation switch (STF) and the reverse rotation switch (STR) are ON, the motor cannot be started. If both are turned ON while the inverter is running, the inverter decelerates to a stop.
- **Pr.178 STF terminal function selection** must be set to "60" (or **Pr.179 STR terminal function selection** must be set to "61"). (All are initial values.)
- Setting **Pr.79 Operation mode selection**="3" also enables multi-speed operation.
- If stopped using STOP RESET on the operation panel (FR-DU08) during the External operation, the inverter enters the PU stop status. (PS appears on the operation panel.)

  To reset the PU stop status, turn OFF the start switch (STF or STR), and then press PU EXT. (Refer to **page 253**)

♦Parameters referred to♦

Pr.4 to Pr.6 (multi-speed setting) ☞**page 319**
Pr.7 Acceleration time, Pr.8 Deceleration time ☞**page 278**
Pr.178 STF terminal function selection ☞**page 416**
Pr.179 STR terminal function selection ☞**page 416**
Pr.79 Operation mode selection ☞**page 299**

上正科技有限公司
購買、維修 此手冊零組件
電話： 037-466333
Email: service@repairtw.com
Line id: @zzzz
www.repairtw.com

4.6.2 Setting the frequency by switches (multi-speed setting) (Pr.4 to Pr.6)

POINT

- Switch ON the STF (STR) signal to give a start command.
- Turn ON the RH, RM, or RL signal to give a frequency command. (Multi-speed setting)

[Connection diagram]

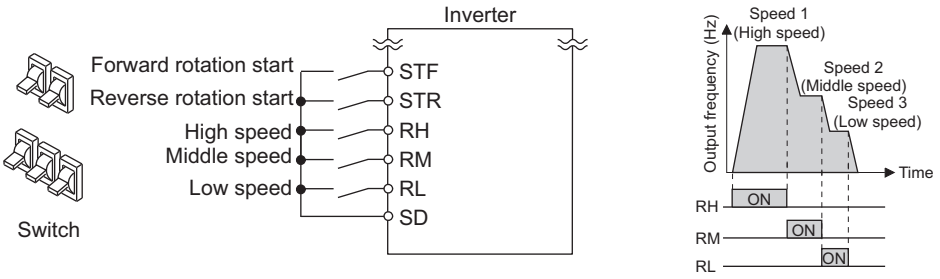

Changing example **Operate at a high-speed (60 Hz).**

Operation

1. Screen at power-ON

The monitor display appears.

2. Setting the frequency

Turn ON the high-speed switch (RH).

3. Start → acceleration → constant speed

Turn ON the start switch (STF or STR). The frequency value on the indication increases in **Pr.7 Acceleration time,** and "60.00" (60.00 Hz) appears. [FWD] indicator is on during the forward rotation, and [REV] indicator is on during the reverse rotation.

- When RM is turned ON, 30 Hz is displayed. When RL is turned ON, 10 Hz is displayed.

4. Deceleration → stop

Turn OFF the start switch (STF or STR).The frequency value on the indication decreases in **Pr.8 Deceleration time,** and the motor stops rotating with "0.00" (0.00 Hz) displayed. [FWD] or [REV] indicator turns OFF. Turn OFF the high-speed switch (RH).

上正科技有限公司
購買、維修 此手冊零組件
電話：037466333
Email: service@repairtw.com
Line id: @zzzz
www.repairtw.com

REMARKS

- When both the forward rotation switch (STF) and the reverse rotation switch (STR) are ON, the motor cannot be started. If both are turned ON while the inverter is running, the inverter decelerates to a stop.
- The terminal RH is initially set to 60 Hz for the FM type inverter, and to 50 Hz for the CA type inverter. The terminal RM is set to 30 Hz, and the RL is set to 10 Hz. (To change, set **Pr.4, Pr.5, and Pr.6**.)
- In the initial setting, when two or more of multi-speed settings are simultaneously selected, priority is given to the set frequency of the lower signal.
  For example, when RH and RM signals turn ON, RM signal (**Pr.5**) has a higher priority.
- Maximum of 15-speed operation can be performed.

♦Parameters referred to♦

Pr.4 to Pr.6 (multi-speed setting) ☞page 319
Pr.7 Acceleration time, Pr.8 Deceleration time ☞page 278

4.6.3 Setting the frequency with analog signals (voltage input)

POINT

- Switch ON the STF (STR) signal to give a start command.
- Use the potentiometer (frequency setting potentiometer) to give a frequency command. (by connecting it across terminals 2 and 5 (voltage input)).

[Connection diagram]
(The inverter supplies 5 V power to the frequency setting potentiometer (terminal 10).)

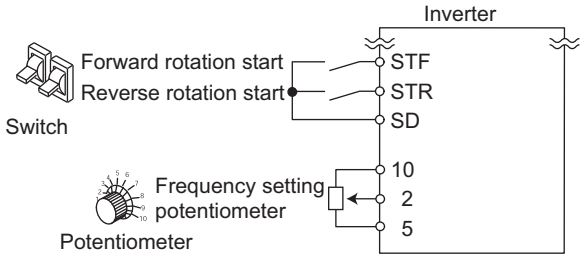

Operation example **Operate at 60 Hz.**

Operation

1.	Screen at power-ON The monitor display appears.
2.	Start Turn ON the start switch (STF or STR). [FWD] or [REV] flickers as no frequency command is given.
3.	Acceleration → constant speed Turn the potentiometer (frequency setting potentiometer) clockwise slowly to full. The frequency value on the indication increases in **Pr.7 Acceleration time**, and "60.00" (60.00 Hz) appears. [FWD] indicator is on during the forward rotation, and [REV] indicator is on during the reverse rotation.
4.	Deceleration Turn the potentiometer (frequency setting potentiometer) counterclockwise slowly to full. The frequency value on the indication decreases in **Pr.8 Deceleration time**, and the motor stops rotating with "0.00" (0.00 Hz) displayed.
5.	Stop Turn OFF the start switch (STF or STR). [FWD] or [REV] indicator turns OFF.

上正科技有限公司
購買、維修 此手冊零組件
電話： 037-466333
Email: service@repair.tw.com
Line id: @zzzz
www.repair.tw.com

REMARKS

- When both the forward rotation switch (STF) and the reverse rotation switch (STR) are ON, the motor cannot be started. If both are turned ON while the inverter is running, the inverter decelerates to a stop.
- **Pr.178 STF terminal function selection** must be set to "60" (or **Pr.179 STR terminal function selection** must be set to "61"). (All are initial values.)

♦Parameters referred to♦

Pr.7 Acceleration time, Pr.8 Deceleration time ☞page 278
Pr.178 STF terminal function selection ☞page 416
Pr.179 STR terminal function selection ☞page 416

4.6.4 Changing the frequency (60 Hz, initial value) at the maximum voltage input (5 V, initial value)

Change the maximum frequency.

Changing example With a 0 to 5 VDC input frequency setting potentiometer, change the frequency at 5 V from 60 Hz (initial value) to 50 Hz.
Adjust the setting so that the inverter outputs 50 Hz when 5 V is input.
Set "50 Hz" in **Pr.125**.

Operation

1. Parameter selection

Turn  until P. 125 **(Pr.125)** appears.

Press SET to show the present set value. (60.00 Hz)

2. Changing the maximum frequency

Turn  to change the set value to "50.00". (50.00 Hz)

Press SET to enter the setting."50.00" and "P. 125" flicker alternately.

3. Checking the mode/monitor

Press MODE three times to change to the monitor / frequency monitor.

4. Start

Turn ON the start switch (STF or STR), then turn the potentiometer (frequency setting potentiometer) clockwise slowly to full. (Refer to steps 2 and 3 in 4.6.3.)
Operate at 50 Hz.

正正科技有限公司
購買、維修、此手冊零組件
電話： 037-466333
Email: service@repairtw.com
Line id: @zzzz
www.repairtw.com

REMARKS

- To set the frequency at 0 V, use **the calibration parameter C2**.

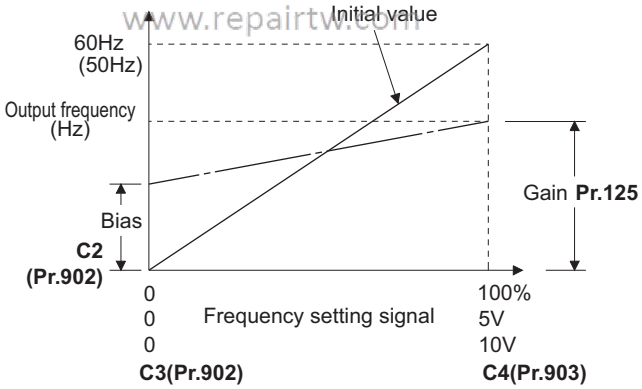

- Other adjustment methods for the frequency setting voltage gain are the following: adjustment by applying a voltage directly across terminals 2 and 5, and adjustment using a specified point without applying a voltage across terminals 2 and 5.

♦Parameters referred to♦

Pr.125 Terminal 2 frequency setting gain frequency ☞ page 400
C2(Pr.902) Terminal 2 frequency setting bias frequency ☞ page 400
C4(Pr.903) Terminal 2 frequency setting gain ☞ page 400

4.6.5 Using an analog signal (current input) to give a frequency command

POINT

- Switch ON the STF (STR) signal to give a start command.
- Turn ON the AU signal.
- Set **Pr.79 Operation mode selection**="2" (External operation mode).

[Connection diagram]

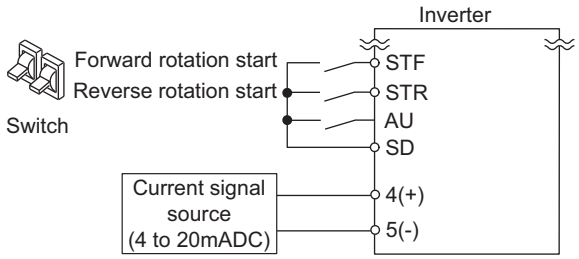

Operation example **Operate at 60 Hz.**

Operation

1.	Screen at power-ON The monitor display appears.
2.	Terminal 4 input selection Turn ON the terminal 4 input selection signal (AU). Input to the terminal 4 is enabled.
3.	Start Turn ON the start switch (STF or STR). [FWD] or [REV] flickers as no frequency command is given.
4.	Acceleration → constant speed Input 20 mA.The frequency value on the indication increases in **Pr.7 Acceleration time,** and "60.00" (60.00 Hz) appears. [FWD] indicator is on during the forward rotation, and [REV] indicator is on during the reverse rotation.
5.	Deceleration Input 4 mA or less.The frequency value on the indication decreases in **Pr.8 Deceleration time,** and the motor stops rotating with "0.00" (0.00 Hz) displayed. [FWD] or [REV] indicator flickers.
6.	Stop Turn OFF the start switch (STF or STR). [FWD] or [REV] indicator turns OFF.

上正科技有限公司
購買、維修 此手冊零組件
電話： 037-466333
Email: service@repairtw.com
www.repairtw.com

REMARKS

- When both the forward rotation switch (STF) and the reverse rotation switch (STR) are ON, the motor cannot be started. If both are turned ON while the inverter is running, the inverter decelerates to a stop.
- **Pr.184 AU terminal function selection** must be set to "4" (AU signal) (initial value).

♦Parameters referred to♦

Pr.7 Acceleration time, Pr.8 Deceleration time ☞page 278
Pr.184 AU terminal function selection ☞page 416

4.6.6 Changing the frequency (60 Hz, initial value) at the maximum current input (at 20 mA, initial value)

Change the maximum frequency.

Changing example	With a 4 to 20 mA input frequency setting potentiometer, change the frequency at 20 mA from 60 Hz (initial value) to 50 Hz. Adjust the setting so that the inverter outputs 50 Hz when 20 mA is input. Set "50 Hz" in **Pr.126**.

Operation

1. Parameter selection

Turn  until P. 126 **(Pr.126)** appears.

Press SET to show the present set value. (60.00 Hz)

2. Changing the maximum frequency

Turn  to change the set value to "50.00". (50.00 Hz)

Press SET to enter the setting. "50.00" and "P. 126" flicker alternately.

3. Checking the mode/monitor

Press MODE three times to change to the monitor / frequency monitor.

4. Start

Turn ON the start switch (STF or STR), then turn the potentiometer (frequency setting potentiometer) clockwise slowly to full. (Refer to steps 3 and 4 in 4.6.5.)

Operate at 50 Hz.

上正科技有限公司
購買、維修 此手冊零組件
電話： 037-466333
Email: service@repairtw.com
www.repairtw.com

REMARKS

- To set the frequency at 4 mA, use **the calibration parameter C5**.

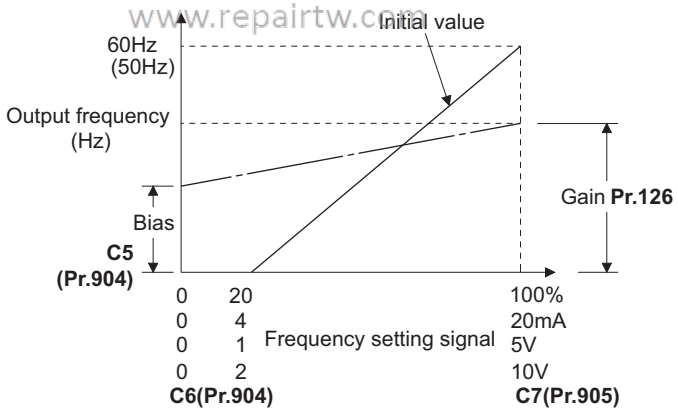

- Other adjustment methods for the frequency setting current gain are the following: adjustment by applying a current through terminals 4 and 5, and adjustment using a specified point without applying a current through terminals 4 and 5.

♦Parameters referred to♦

Pr.126 Terminal 4 frequency setting gain frequency ☞page 400
C5(Pr.904) Terminal 4 frequency setting bias frequency ☞page 400
C7(Pr.905) Terminal 4 frequency setting gain ☞page 400

4.7 Basic operation procedure (JOG operation)

4.7.1 Performing JOG operation using external signals

POINT

- Perform JOG operation only while the JOG signal is ON.
- Use **Pr.15 Jog frequency** and **Pr.16 Jog acceleration/deceleration time** for the operation.
- Set **Pr.79 Operation mode selection**="2" (External operation mode).

[Connection diagram]

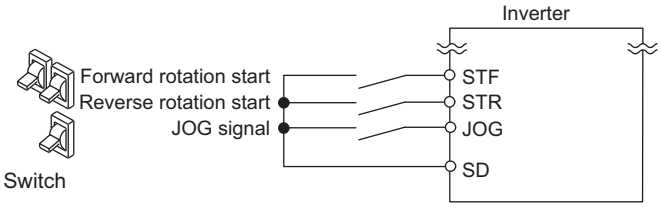

Operation example **Operate at 5 Hz.**

Operation

上正科技有限公司
購買、維修 此手冊零組件
電話： 037-466333
Email: service@repairtw.com
Line id: @zzzz
www.repairtw.com

1.	Screen at power-ON The monitor display appears.
2.	Turning ON the JOG signal Turn ON the JOG switch (JOG). The inverter is set ready for the JOG operation.
3.	Start → acceleration → constant speed Turn ON the start switch (STF or STR). The frequency value on the indication increases in **Pr.16 Jog acceleration/deceleration time,** and "5.00" (5.00 Hz) appears. [FWD] indicator is on during the forward rotation, and [REV] indicator is on during the reverse rotation.
4.	Deceleration → stop Turn OFF the start switch (STF or STR). The frequency value on the indication decreases in **Pr.16 Jog acceleration/deceleration time,** and the motor stops rotating with "0.00" (0.00 Hz) displayed. [FWD] or [REV] indicator turns OFF. Turn OFF the JOG switch (JOG).
5.	Stop Turn OFF the start switch (STF or STR). [FWD] or [REV] indicator turns OFF.

REMARKS

- To change the running frequency, change **Pr.15 Jog frequency** (initial value "5 Hz").
- To change the acceleration/deceleration time, change **Pr.16 Jog acceleration/deceleration time** (initial value "0.5 s").

♦Parameters referred to♦

Pr.15 Jog frequency ☞ page 318
Pr.16 Jog acceleration/deceleration time ☞ page 318
Pr.79 Operation mode selection ☞ page 299

4.7.2 JOG operation from the operation panel

POINT

- Operate only while FWD or REV is pressed.

Operation panel
(FR-DU08)



Operation example **Operate at 5 Hz.**

Operation

1.	Screen at power-ON The monitor display appears.
2.	Changing the operation mode Press PU EXT twice to choose the PUJOG operation mode. The monitor displays JOG, and [PU] indicator is on.
3.	Start → acceleration → constant speed Keep pressing FWD or REV. The frequency value on the indication increases in **Pr.16 Jog acceleration/deceleration time,** and "5.00" (5.00 Hz) appears.
4.	Deceleration → stop Release FWD or REV. The frequency value on the indication decreases in **Pr.16 Jog acceleration/deceleration time,** and the motor stops rotating with "0.00" (0.00 Hz) displayed.

上正科技有限公司
購買、維修 此手冊零組件
電話： 037-466333
Email: service@repairtw.com
Line id: @zzzz
www.repairtw.com

REMARKS

- To change the running frequency, change **Pr.15 Jog frequency** (initial value "5 Hz").
- To change the acceleration/deceleration time, change **Pr.16 Jog acceleration/deceleration time** (initial value "0.5 s").

♦Parameters referred to♦

Pr.15 Jog frequency ☞ page 318
Pr.16 Jog acceleration/deceleration time ☞ page 318

MEMO

上正科技有限公司
購買、維修 此手冊零組件
電話： 037-466333
Email: service@repairtw.com
Line id: @zzzz
www.repairtw.com

5 PARAMETERS

This chapter explains the function setting for use of this product.
Always read this instructions before use.

The following marks are used to indicate the controls as below. (Parameters without any mark are valid for all control.)

Mark	Control method	Applied motor
V/F	V/F control	Three-phase induction motor
Magnetic flux	Advanced magnetic flux vector control	
Sensorless	Real sensorless vector control	
Vector	Vector control	
PM	PM sensorless vector control	IPM motor

上下科技有限公司
購買、維修 此手冊零組件
電話： 037 466333
Email: service@repairtw.com
Line id: @zzz
www.repairtw.com

5.1 Parameter List

5.1.1 Parameter list (by parameter number)

For simple variable-speed operation of the inverter, the initial value of the parameters may be used as they are. Set the necessary parameters to meet the load and operational specifications. Parameter setting, change and check can be made from the operation panel (FR-DU08).

REMARKS

- Simple indicates simple mode parameters. Use **Pr.160 User group read selection** to indicate the simple mode parameters only.
- Parameter setting may be restricted in some operating statuses. Use **Pr.77 Parameter write selection** to change the setting.
- Refer to Appendix 3 (page 691) for instruction codes for communication and availability of parameter clear, all clear, and parameter copy of each parameter.

Pr.	Pr. group	Name	Setting range	Minimum setting increments	Initial value FM	Initial value CA	Refer to page	Customer setting
0	G000	Torque boost Simple	0 to 30%	0.1%	6% *1 4% *1 3% *1 2% *1 1% *1		577	
1	H400	Maximum frequency Simple	0 to 120 Hz	0.01 Hz	120 Hz *2 60 Hz *3		334	
2	H401	Minimum frequency Simple	0 to 120 Hz	0.01 Hz	0 Hz		334	
3	G001	Base frequency Simple	0 to 590 Hz	0.01 Hz	60 Hz	50 Hz	578	
4	D301	Multi-speed setting (high speed) Simple	0 to 590 Hz	0.01 Hz	60 Hz	50 Hz	319	
5	D302	Multi-speed setting (middle speed) Simple	0 to 590 Hz	0.01 Hz	30 Hz		319	
6	D303	Multi-speed setting (low speed) Simple	0 to 590 Hz	0.01 Hz	10 Hz		319	
7	F010	Acceleration time Simple	0 to 3600 s	0.1 s	5 s *4 15 s *5		278	
8	F011	Deceleration time Simple	0 to 3600 s	0.1 s	5 s *4 15 s *5		278	
9	H000 C103	Electronic thermal O/L relay Simple	0 to 500 A	0.01 A *2	Rated inverter current		322, 428, 438	
		Rated motor current Simple	0 to 3600 A	0.1 A *3				
10	G100	DC injection brake operation frequency	0 to 120 Hz, 9999	0.01 Hz	3 Hz		584	
11	G101	DC injection brake operation time	0 to 10 s, 8888	0.1 s	0.5 s		584	
12	G110	DC injection brake operation voltage	0 to 30%	0.1%	4% *6 2% *6 1% *6		584	
13	F102	Starting frequency	0 to 60 Hz	0.01 Hz	0.5 Hz		291, 292	
14	G003	Load pattern selection	0 to 5	1	0		580	
15	D200	Jog frequency	0 to 590 Hz	0.01 Hz	5 Hz		318	
16	F002	Jog acceleration/deceleration time	0 to 3600 s	0.1 s	0.5 s		318	
17	T720	MRS input selection	0, 2, 4	1	0		419	
18	H402	High speed maximum frequency	0 to 590 Hz	0.01 Hz	120 Hz *2 60 Hz *3		334	
19	G002	Base frequency voltage	0 to 1000 V, 8888, 9999	0.1 V	9999	8888	578	
20	F000	Acceleration/deceleration reference frequency	1 to 590 Hz	0.01 Hz	60 Hz	50 Hz	278	
21	F001	Acceleration/deceleration time increments	0 to 1	1	0		278	

上正科技有限公司
購買、維修 此手冊零組件
電話： 037-466333
Email: service@repairtw.com
Line Id: @zzzz
www.repairtw.com

Pr.	Pr. group	Name	Setting range	Minimum setting increments	Initial value FM	Initial value CA	Refer to page	Customer setting
22	H500	Stall prevention operation level (Torque limit level)	0 to 400%	0.1%	150%		181, 336	
23	H610	Stall prevention operation level compensation factor at double speed	0 to 200%, 9999	0.1%	9999		336	
24 to 27	D304 to D307	Multi-speed setting (4 speed to 7 speed)	0 to 590 Hz, 9999	0.01 Hz	9999		319	
28	D300	Multi-speed input compensation selection	0 to 1	1	0		319	
29	F100	Acceleration/deceleration pattern selection	0 to 6	1	0		283	
30	E300	Regenerative function selection	0 to 2, 10, 11, 20, 21, 100 to 102, 110, 111, 120, 121*11 0, 2, 10, 20, 100, 102, 110, 120*12	1	0		593	
31	H420	Frequency jump 1A	0 to 590 Hz, 9999	0.01 Hz	9999		335	
32	H421	Frequency jump 1B	0 to 590 Hz, 9999	0.01 Hz	9999		335	
33	H422	Frequency jump 2A	0 to 590 Hz, 9999	0.01 Hz	9999		335	
34	H423	Frequency jump 2B	0 to 590 Hz, 9999	0.01 Hz	9999		335	
35	H424	Frequency jump 3A	0 to 590 Hz, 9999	0.01 Hz	9999		335	
36	H425	Frequency jump 3B	0 to 590 Hz, 9999	0.01 Hz	9999		335	
37	M000	Speed display	0, 1 to 9998	1	0		344	
41	M441	Up-to-frequency sensitivity	0 to 100%	0.1%	10%		378	
42	M442	Output frequency detection	0 to 590 Hz	0.01 Hz	6 Hz		378	
43	M443	Output frequency detection for reverse rotation	0 to 590 Hz, 9999	0.01 Hz	9999		378	
44	F020	Second acceleration/deceleration time	0 to 3600 s	0.1 s	5 s		278, 503	
45	F021	Second deceleration time	0 to 3600 s, 9999	0.1 s	9999		278, 503	
46	G010	Second torque boost	0 to 30%, 9999	0.1%	9999		577	
47	G011	Second V/F (base frequency)	0 to 590 Hz, 9999	0.01 Hz	9999		578	
48	H600	Second stall prevention operation level	0 to 400%	0.1%	150%		336	
49	H601	Second stall prevention operation frequency	0 to 590 Hz, 9999	0.01 Hz	0 Hz		336	
50	M444	Second output frequency detection	0 to 590 Hz	0.01 Hz	30 Hz		378	
51	H010 C203	Second electronic thermal O/L relay Rated second motor current	0 to 500 A, 9999 *2 0 to 3600 A, 9999 *3	0.01 A 0.1 A	9999		322, 428, 438	
52	M100	Operation panel main monitor selection	0, 5 to 14, 17 to 20, 22 to 35, 38, 40 to 45, 50 to 57, 61, 62, 64, 67, 87 to 98, 100	1	0		346	
54	M300	FM/CA terminal function selection	1 to 3, 5 to 14, 17, 18, 21, 24, 32 to 34, 50, 52, 53, 61, 62, 67, 70, 87 to 90, 92, 93, 95, 97, 98	1	1		356	
55	M040	Frequency monitoring reference	0 to 590 Hz	0.01 Hz	60 Hz	50 Hz	356	
56	M041	Current monitoring reference	0 to 500 A *2 0 to 3600 A *3	0.01 A 0.1 A	Rated inverter current		356	
57	A702	Restart coasting time	0, 0.1 to 30 s, 9999	0.1 s	9999		511, 517	
58	A703	Restart cushion time	0 to 60 s	0.1 s	1 s		511	
59	F101	Remote function selection	0 to 3, 11 to 13	1	0		288	
60	G030	Energy saving control selection	0, 4, 9	1	0		582	
61	F510	Reference current	0 to 500 A, 9999 *2 0 to 3600 A, 9999 *3	0.01 A 0.1 A	9999		293, 296	

上正科技有限公司
購買、維修 此手冊零組件
電話： 037-466333
Email: service@repairtw.com
Line id: @zzzz
www.repairtw.com

Pr.	Pr. group	Name	Setting range	Minimum setting increments	Initial value FM	Initial value CA	Refer to page	Customer setting
62	F511	Reference value at acceleration	0 to 400%, 9999	0.1%	9999		293	
63	F512	Reference value at deceleration	0 to 400%, 9999	0.1%	9999		293	
64	F520	Starting frequency for elevator mode	0 to 10 Hz, 9999	0.01 Hz	9999		296	
65	H300	Retry selection	0 to 5	1	0		332	
66	H611	Stall prevention operation reduction starting frequency	0 to 590 Hz	0.01 Hz	60 Hz	50 Hz	336	
67	H301	Number of retries at fault occurrence	0 to 10, 101 to 110	1	0		332	
68	H302	Retry waiting time	0.1 to 600 s	0.1 s	1 s		332	
69	H303	Retry count display erase	0	1	0		332	
70 *13	G107	Special regenerative brake duty	0 to 100%	0.1%	0%		593	
71	C100	Applied motor	0 to 6, 13 to 16, 20, 23, 24, 30, 33, 34, 40, 43, 44, 50, 53, 54, 70, 73, 74, 330, 333, 334, 8090, 8093, 8094, 9090, 9093, 9094	1	0		424, 428, 438	
72	E600	PWM frequency selection	0 to 15 *2 0 to 6, 25 *3	1	2		270	
73	T000	Analog input selection	0 to 7, 10 to 17	1	1		391, 396	
74	T002	Input filter time constant	0 to 8	1	1		398	
75	-	Reset selection/disconnected PU detection/PU stop selection	0 to 3, 14 to 17 *2 0 to 3, 14 to 17, 100 to 103, 114 to 117 *3	1	14		252	
	E100	Reset selection	0, 1		0			
	E101	Disconnected PU detection						
	E102	PU stop selection			1			
	E107	Reset limit	0 *2 0, 1 *3	1	0			
76	M510	Fault code output selection	0 to 2	1	0		387	
77	E400	Parameter write selection	0 to 2	1	0		260	
78	D020	Reverse rotation prevention selection	0 to 2	1	0		314	
79	D000	Operation mode selection Simple	0 to 4, 6, 7	1	0		299, 307	
80	C101	Motor capacity	0.4 to 55 kW, 9999 *2 0 to 3600 kW, 9999 *3	0.01 kW *2 0.1 kW *3	9999		160, 428, 438	
81	C102	Number of motor poles	2, 4, 6, 8, 10, 12, 9999	1	9999		160, 428, 438	
82	C125	Motor excitation current	0 to 500 A, 9999 *2 0 to 3600 A, 9999 *3	0.01 A *2 0.1 A *3	9999		428	
83	C104	Rated motor voltage	0 to 1000 V	0.1 V	200 V *7 400 V *8		160, 428, 438	
84	C105	Rated motor frequency	10 to 400 Hz, 9999	0.01 Hz	9999		160, 428, 438	
89	G932	Speed control gain (Advanced magnetic flux vector)	0 to 200%, 9999	0.1%	9999		167	
90	C120	Motor constant (R1)	0 to 50 Ω, 9999 *2 0 to 400 mΩ, 9999 *3	0.001 Ω *2 0.01 mΩ *3	9999		428, 438	
91	C121	Motor constant (R2)	0 to 50 Ω, 9999 *2 0 to 400 mΩ, 9999 *3	0.001 Ω *2 0.01 mΩ *3	9999		428	
92	C122	Motor constant (L1)/d-shaft inductance (Ld)	0 to 6000mH, 9999 *2 0 to 400mH, 9999 *3	0.1 mH *2 0.01 mH *3	9999		428, 438	

上正科技有限公司
購買、維修此手冊零組件
電話： 037-466333
Email: service@repairtw.com
Line id: @zzzz
www.repairtw.com

Pr.	Pr. group	Name	Setting range	Minimum setting increments	Initial value FM	Initial value CA	Refer to page	Customer setting
93	C123	Motor constant (L2)/q-shaft inductance (Lq)	0 to 6000mH, 9999 *2 0 to 400mH, 9999 *3	0.1 mH *2 0.01 mH *3	9999		428, 438	
94	C124	Motor constant (X)	0 to 100%, 9999	0.1% *2 0.01% *3	9999		428	
95	C111	Online auto tuning selection	0 to 2	1	0		445	
96	C110	Auto tuning setting/status	0, 1, 11, 101	1	0		428, 438	
100	G040	V/F1(first frequency)	0 to 590 Hz, 9999	0.01 Hz	9999		583	
101	G041	V/F1(first frequency voltage)	0 to 1000 V	0.1 V	0 V		583	
102	G042	V/F2(second frequency)	0 to 590 Hz, 9999	0.01 Hz	9999		583	
103	G043	V/F2(second frequency voltage)	0 to 1000 V	0.1 V	0 V		583	
104	G044	V/F3(third frequency)	0 to 590 Hz, 9999	0.01 Hz	9999		583	
105	G045	V/F3(third frequency voltage)	0 to 1000 V	0.1 V	0 V		583	
106	G046	V/F4(fourth frequency)	0 to 590 Hz, 9999	0.01 Hz	9999		583	
107	G047	V/F4(fourth frequency voltage)	0 to 1000 V	0.1 V	0 V		583	
108	G048	V/F5(fifth frequency)	0 to 590 Hz, 9999	0.01 Hz	9999		583	
109	G049	V/F5(fifth frequency voltage)	0 to 1000 V	0.1 V	0 V		583	
110	F030	Third acceleration/deceleration time	0 to 3600 s, 9999	0.1 s	9999		278	
111	F031	Third deceleration time	0 to 3600 s, 9999	0.1 s	9999		278	
112	G020	Third torque boost	0 to 30%, 9999	0.1%	9999		577	
113	G021	Third V/F (base frequency)	0 to 590 Hz, 9999	0.01 Hz	9999		578	
114	H602	Third stall prevention operation level	0 to 400%	0.1%	150%		336	
115	H603	Third stall prevention operation frequency	0 to 590 Hz	0.01 Hz	0 Hz		336	
116	M445	Third output frequency detection	0 to 590 Hz	0.01 Hz	60 Hz	50 Hz	378	
117	N020	PU communication station number	0 to 31	1	0		544	
118	N021	PU communication speed	48, 96, 192, 384, 576, 768, 1152	1	192		544	
119	-	PU communication stop bit length / data length	0, 1, 10, 11	1	1		544	
	N022	PU communication data length	0, 1		0			
	N023	PU communication stop bit length	0, 1		1			
120	N024	PU communication parity check	0 to 2	1	2		544	
121	N025	Number of PU communication retries	0 to 10, 9999	1	1		544	
122	N026	PU communication check time interval	0, 0.1 to 999.8 s, 9999	0.1 s	9999		544	
123	N027	PU communication waiting time setting	0 to 150 ms, 9999	1 ms	9999		544	
124	N028	PU communication CR/LF selection	0 to 2	1	1		544	
125	T022	Terminal 2 frequency setting gain frequency *Simple*	0 to 590 Hz	0.01 Hz	60 Hz	50 Hz	400	
126	T042	Terminal 4 frequency setting gain frequency *Simple*	0 to 590 Hz	0.01 Hz	60 Hz	50 Hz	400	
127	A612	PID control automatic switchover frequency	0 to 590 Hz, 9999	0.01 Hz	9999		483	
128	A610	PID action selection	0, 10, 11, 20, 21, 40 to 43, 50, 51, 60, 61, 70, 71, 80, 81, 90, 91, 100, 101, 1000, 1001, 1010, 1011, 2000, 2001, 2010, 2011	1	0		483, 503	
129	A613	PID proportional band	0.1 to 1000%, 9999	0.1%	100%		483, 503	
130	A614	PID integral time	0.1 to 3600 s, 9999	0.1 s	1 s		483, 503	
131	A601	PID upper limit	0 to 100%, 9999	0.1%	9999		483, 503	
132	A602	PID lower limit	0 to 100%, 9999	0.1%	9999		483, 503	

上正科技有限公司
購買、維修 此手冊零組件
電話： 037-460335
Email: service@repairtw.com
Line id: @zzzz
www.repairtw.com

Pr.	Pr. group	Name	Setting range	Minimum setting increments	Initial value		Refer to page	Customer setting
					FM	CA		
133	A611	PID action set point	0 to 100%, 9999	0.01%	9999		483, 503	
134	A615	PID differential time	0.01 to 10 s, 9999	0.01 s	9999		483, 503	
135	A000	Electronic bypass sequence selection	0, 1	1	0		450	
136	A001	MC switchover interlock time	0 to 100 s	0.1 s	1 s		450	
137	A002	Start waiting time	0 to 100 s	0.1 s	0.5 s		450	
138	A003	Bypass selection at a fault	0, 1	1	0		450	
139	A004	Automatic switchover frequency from inverter to bypass operation	0 to 60 Hz, 9999	0.01 Hz	9999		450	
140	F200	Backlash acceleration stopping frequency	0 to 590 Hz	0.01 Hz	1 Hz		283	
141	F201	Backlash acceleration stopping time	0 to 360 s	0.1 s	0.5 s		283	
142	F202	Backlash deceleration stopping frequency	0 to 590 Hz	0.01 Hz	1 Hz		283	
143	F203	Backlash deceleration stopping time	0 to 360 s	0.1 s	0.5 s		283	
144	M002	Speed setting switchover	0, 2, 4, 6, 8, 10, 12, 102, 104, 106, 108, 110, 112	1	4		344	
145	E103	PU display language selection	0 to 7	1	1		254	
147	F022	Acceleration/deceleration time switching frequency	0 to 590 Hz, 9999	0.01 Hz	9999		278	
148	H620	Stall prevention level at 0 V input	0 to 400%	0.1%	150%		336	
149	H621	Stall prevention level at 10 V input	0 to 400%	0.1%	200%		336	
150	M460	Output current detection level	0 to 400%	0.1%	150%		381	
151	M461	Output current detection signal delay time	0 to 10 s	0.1 s	0 s		381	
152	M462	Zero current detection level	0 to 400%	0.1%	5%		381	
153	M463	Zero current detection time	0 to 10 s	0.01 s	0.5 s		381	
154	H631	Voltage reduction selection during stall prevention operation	0, 1, 10, 11	1	1		336	
155	T730	RT signal function validity condition selection	0, 10	1	0		420	
156	H501	Stall prevention operation selection	0 to 31, 100, 101	1	0		336	
157	M430	OL signal output timer	0 to 25 s, 9999	0.1 s	0 s		181, 336	
158	M301	AM terminal function selection	1 to 3, 5 to 14, 17, 18, 21, 24, 32 to 34, 50, 52 to 54, 61, 62, 67, 70, 87 to 90, 91 to 98	1	1		356	
159	A005	Automatic switchover frequency range from bypass to inverter operation	0 to 10 Hz, 9999	0.01 Hz	9999		450	
160	E440	User group read selection *Simple*	0, 1, 9999	1	0		268	
161	E200	Frequency setting/key lock operation selection	0, 1, 10, 11	1	0		256	
162	A700	Automatic restart after instantaneous power failure selection	0 to 3, 10 to 13	1	0		511, 517	
163	A704	First cushion time for restart	0 to 20 s	0.1 s	0 s		511	
164	A705	First cushion voltage for restart	0 to 100%	0.1%	0%		511	
165	A710	Stall prevention operation level for restart	0 to 400%	0.1%	150%		511	
166	M433	Output current detection signal retention time	0 to 10 s, 9999	0.1 s	0.1 s		381	
167	M464	Output current detection operation selection	0, 1, 10, 11	1	0		381	
168	E000	Parameter for manufacturer setting. Do not set.						
	E080							
169	E001							
	E081							
170	M020	Watt-hour meter clear	0, 10, 9999	1	9999		346	

中正科技有限公司
購買、維修 此手冊零組件
電話： 037466333
email: service@repairtw.com
Line id: @zzzz
www.repairtw.com

Pr.	Pr. group	Name	Setting range	Minimum setting increments	Initial value FM	Initial value CA	Refer to page	Customer setting
171	M030	Operation hour meter clear	0, 9999	1	9999		346	
172	E441	User group registered display/batch clear	9999, (0 to 16)	1	0		268	
173	E442	User group registration	0 to 1999, 9999	1	9999		268	
174	E443	User group clear	0 to 1999, 9999	1	9999		268	
178	T700	STF terminal function selection	0 to 20, 22 to 28, 37, 42 to 47, 50, 51, 60, 62, 64 to 74, 76 to 80, 87, 92, 93, 9999	1	60		416	
179	T701	STR terminal function selection	0 to 20, 22 to 28, 37, 42 to 47, 50, 51, 61, 62, 64 to 74, 76 to 80, 87, 92, 93, 9999	1	61		416	
180	T702	RL terminal function selection	0 to 20, 22 to 28, 37, 42 to 47, 50, 51, 62, 64 to 74, 76 to 80, 87, 92, 93, 9999	1	0		416	
181	T703	RM terminal function selection		1	1		416	
182	T704	RH terminal function selection		1	2		416	
183	T705	RT terminal function selection		1	3		416	
184	T706	AU terminal function selection		1	4		416	
185	T707	JOG terminal function selection		1	5		416	
186	T708	CS terminal function selection		1	6		416	
187	T709	MRS terminal function selection		1	24		416	
188	T710	STOP terminal function selection		1	25		416	
189	T711	RES terminal function selection		1	62		416	
190	M400	RUN terminal function selection	0 to 8, 10 to 20, 22, 25 to 28, 30 to 36, 38 to 54, 56, 57, 60, 61, 63, 64, 68, 70, 79, 84, 85, 90 to 99, 100 to 108, 110 to 116, 120, 122, 125 to 128, 130 to 136, 138 to 154, 156, 157, 160, 161, 163, 164, 168, 170, 179, 184, 185, 190 to 199, 200 to 208, 300 to 308, 9999	1	0		370	
191	M401	SU terminal function selection		1	1		370	
192	M402	IPF terminal function selection		1	2		370	
193	M403	OL terminal function selection		1	3		370	
194	M404	FU terminal function selection		1	4		370	
195	M405	ABC1 terminal function selection	0 to 8, 10 to 20, 22, 25 to 28, 30 to 36, 38 to 54, 56, 57, 60, 61, 63, 64, 68, 70, 79, 84, 85, 90, 91, 94 to 99, 100 to 108, 110 to 116, 120, 122, 125 to 128, 130 to 136, 138 to 154, 156, 157, 160, 161, 163, 164, 168, 170, 179, 184, 185, 190, 191, 194 to 199, 200 to 208, 300 to 308, 9999	1	99		370	
196	M406	ABC2 terminal function selection		1	9999		370	
232 to 239	D308 to D315	Multi-speed setting (8 speed to 15 speed)	0 to 590 Hz, 9999	0.01 Hz	9999		319	
240	E601	Soft-PWM operation selection	0, 1	1	1		270	
241	M043	Analog input display unit switchover	0, 1	1	0		400	
242	T021	Terminal 1 added compensation amount (terminal 2)	0 to 100%	0.1%	100%		396	
243	T041	Terminal 1 added compensation amount (terminal 4)	0 to 100%	0.1%	75%		396	
244	H100	Cooling fan operation selection	0, 1, 101 to 105	1	1		329	
245	G203	Rated slip	0 to 50%, 9999	0.01%	9999		602	
246	G204	Slip compensation time constant	0.01 to 10 s	0.01 s	0.5 s		602	

上正科技有限公司
購買、維修 此手冊零組件
電話： 037-466333
Email: service@repairtw.com
Line id: @zzzz
www.repairtw.com

Pr.	Pr. group	Name	Setting range	Minimum setting increments	Initial value		Refer to page	Customer setting
					FM	CA		
247	G205	Constant-power range slip compensation selection	0, 9999	1	9999		602	
248	A006	Self power management selection	0 to 2	1	0		455	
249	H101	Earth (ground) fault detection at start	0, 1	1	0		592	
250	G106	Stop selection	0 to 100 s, 1000 to 1100 s, 8888, 9999	0.1 s	9999		592	
251	H200	Output phase loss protection selection	0, 1	1	1		331	
252	T050	Override bias	0 to 200%	0.1%	50%		396	
253	T051	Override gain	0 to 200%	0.1%	150%		396	
254	A007	Main circuit power OFF waiting time	0 to 3600 s, 9999	1 s	600 s		455	
255	E700	Life alarm status display	(0 to 15)	1	0		271	
256	E701	Inrush current limit circuit life display	(0 to 100%)	1%	100%		271	
257	E702	Control circuit capacitor life display	(0 to 100%)	1%	100%		271	
258	E703	Main circuit capacitor life display	(0 to 100%)	1%	100%		271	
259	E704	Main circuit capacitor life measuring	0, 1	1	0		271	
260	E602	PWM frequency automatic switchover	0, 1	1	1		270	
261	A730	Power failure stop selection	0 to 2, 11, 12, 21, 22	1	0		523	
262	A731	Subtracted frequency at deceleration start	0 to 20 Hz	0.01 Hz	3 Hz		523	
263	A732	Subtraction starting frequency	0 to 590 Hz, 9999	0.01 Hz	60 Hz	50 Hz	523	
264	A733	Power-failure deceleration time 1	0 to 3600 s	0.1 s	5 s		523	
265	A734	Power-failure deceleration time 2	0 to 3600 s, 9999	0.1 s	9999		523	
266	A735	Power failure deceleration time switchover frequency	0 to 590 Hz	0.01 Hz	60 Hz	50 Hz	523	
267	T001	Terminal 4 input selection	0 to 2	1	0		391	
268	M022	Monitor decimal digits selection	0, 1, 9999	1	9999		346	
269	E023	Parameter for manufacturer setting. Do not set.						
270	A200	Stop-on contact/load torque high-speed frequency control selection	0 to 3, 11, 13	1	0		462, 465	
271	A201	High-speed setting maximum current	0 to 400%	0.1%	50%		465	
272	A202	Middle-speed setting minimum current	0 to 400%	0.1%	100%		465	
273	A203	Current averaging range	0 to 590 Hz, 9999	0.01 Hz	9999		465	
274	A204	Current averaging filter time constant	1 to 4000	1	16		465	
275	A205	Stop-on contact excitation current low-speed multiplying factor	50 to 300%, 9999	0.1%	9999		462	
276	A206	PWM carrier frequency at stop-on contact	0 to 9, 9999 *2 0 to 4, 9999 *3	1	9999		462	
278	A100	Brake opening frequency	0 to 30 Hz	0.01 Hz	3 Hz		457	
279	A101	Brake opening current	0 to 400%	0.1%	130%		457	
280	A102	Brake opening current detection time	0 to 2 s	0.1 s	0.3 s		457	
281	A103	Brake operation time at start	0 to 5 s	0.1 s	0.3 s		457	
282	A104	Brake operation frequency	0 to 30 Hz	0.01 Hz	6 Hz		457	
283	A105	Brake operation time at stop	0 to 5 s	0.1 s	0.3 s		457	
284	A106	Deceleration detection function selection	0, 1	1	0		457	
285	A107 / H416	Overspeed detection frequency / Speed deviation excess detection frequency	0 to 30 Hz, 9999	0.01 Hz	9999		202, 457, 603	
286	G400	Droop gain	0 to 100%	0.1%	0%		605	
287	G401	Droop filter time constant	0 to 1 s	0.01 s	0.3 s		605	
288	G402	Droop function activation selection	0 to 2, 10, 11	1	0		605	
289	M431	Inverter output terminal filter	5 to 50 ms, 9999	1 ms	9999		370	

上正科技有限公司
購買、維修、手冊零組件
電話：037-466333
Email: service@repairtw.com
Line id: @2222
www.repairtw.com

Pr.	Pr. group	Name	Setting range	Minimum setting increments	Initial value FM	Initial value CA	Refer to page	Customer setting
290	M044	Monitor negative output selection	0 to 7	1	0		346, 356	
291	D100	Pulse train I/O selection	0, 1, 10, 11, 20, 21, 100 (FM Type) 0, 1 (CA Type)	1	0		315, 356	
292	A110 F500	Automatic acceleration/deceleration	0, 1, 3, 5 to 8, 11	1	0		293, 296, 457	
293	F513	Acceleration/deceleration separate selection	0 to 2	1	0		293	
294	A785	UV avoidance voltage gain	0 to 200%	0.1%	100%		523	
295	E201	Frequency change increment amount setting	0, 0.01, 0.1, 1, 10	0.01	0		257	
296	E410	Password lock level	0 to 6, 99, 100 to 106, 199, 9999	1	9999		262	
297	E411	Password lock/unlock	(0 to 5), 1000 to 9998, 9999	1	9999		262	
298	A711	Frequency search gain	0 to 32767, 9999	1	9999		511	
299	A701	Rotation direction detection selection at restarting	0, 1, 9999	1	0		511	
331	N030	RS-485 communication station number	0 to 31(0 to 247)	1	0		544	
332	N031	RS-485 communication speed	3, 6, 12, 24, 48, 96, 192, 384, 576, 768, 1152	1	96		544	
333	-	RS-485 communication stop bit length / data length	0, 1, 10, 11	1	1		544	
	N032	PU communication data length	0, 1	1	0			
	N033	PU communication stop bit length	0, 1	1	1			
334	N034	RS-485 communication parity check selection	0 to 2	1	2		544	
335	N035	RS-485 communication retry count	0 to 10, 9999	1	1		544	
336	N036	RS-485 communication check time interval	0 to 999.8 s, 9999	0.1 s	0 s		544	
337	N037	RS-485 communication waiting time setting	0 to 150 ms, 9999	1 ms	9999		544	
338	D010	Communication operation command source	0, 1	1	0		308	
339	D011	Communication speed command source	0 to 2	1	0		308	
340	D001	Communication startup mode selection	0 to 2, 10, 12	1	0		307	
341	N038	RS-485 communication CR/LF selection	0 to 2	1	1		544	
342	N001	Communication EEPROM write selection	0, 1	1	0		541	
343	N080	Communication error count	-	1	0		560	
350 *9	A510	Stop position command selection	0, 1, 9999	1	9999		471	
351 *9	A526	Orientation speed	0 to 30 Hz	0.01 Hz	2 Hz		471	
352 *9	A527	Creep speed	0 to 10 Hz	0.01 Hz	0.5 Hz		471	
353 *9	A528	Creep switchover position	0 to 16383	1	511		471	
354 *9	A529	Position loop switchover position	0 to 8191	1	96		471	
355 *9	A530	DC injection brake start position	0 to 255	1	5		471	
356 *9	A531	Internal stop position command	0 to 16383	1	0		471	
357 *9	A532	Orientation in-position zone	0 to 255	1	5		471	
358 *9	A533	Servo torque selection	0 to 13	1	1		471	
359 *9	C141	Encoder rotation direction	0, 1, 100, 101	1	1		68, 471, 603	
360 *9	A511	16-bit data selection	0 to 127	1	0		471	
361 *9	A512	Position shift	0 to 16383	1	0		471	
362 *9	A520	Orientation position loop gain	0.1 to 100	0.1	1		471	

上正科技有限公司
購買、維修 此手冊零組件
電話： 037-466333
Email: service@repairtw.com
Line id: @zzzz
www.repairtw.com

Pr.	Pr. group	Name	Setting range	Minimum setting increments	Initial value		Refer to page	Customer setting
					FM	CA		
363 *9	A521	Completion signal output delay time	0 to 5 s	0.1 s	0.5 s		471	
364 *9	A522	Encoder stop check time	0 to 5 s	0.1 s	0.5 s		471	
365 *9	A523	Orientation limit	0 to 60 s, 9999	1 s	9999		471	
366 *9	A524	Recheck time	0 to 5 s, 9999	0.1 s	9999		471	
367 *9	G240	Speed feedback range	0 to 400 Hz, 9999	0.01 Hz	9999		603	
368 *9	G241	Feedback gain	0 to 100	0.1	1		603	
369 *9	C140	Number of encoder pulses	0 to 4096	1	1024		68, 471, 603	
374	H800	Overspeed detection level	0 to 590 Hz, 9999	0.01 Hz	9999		342	
376 *9	C148	Encoder signal loss detection enable/disable selection	0, 1	1	0		448	
380	F300	Acceleration S-pattern 1	0 to 50%	1%	0%		283	
381	F301	Deceleration S-pattern 1	0 to 50%	1%	0%		283	
382	F302	Acceleration S-pattern 2	0 to 50%	1%	0%		283	
383	F303	Deceleration S-pattern 2	0 to 50%	1%	0%		283	
384	D101	Input pulse division scaling factor	0 to 250	1	0		315	
385	D110	Frequency for zero input pulse	0 to 590 Hz	0.01 Hz	0 Hz		315	
386	D111	Frequency for maximum input pulse	0 to 590 Hz	0.01 Hz	60 Hz	50 Hz	315	
393 *9	A525	Orientation selection	0 to 2	1	0		471	
396 *9	A542	Orientation speed gain (P term)	0 to 1000	1	60		471	
397 *9	A543	Orientation speed integral time	0 to 20 s	0.001 s	0.333 s		471	
398 *9	A544	Orientation speed gain (D term)	0 to 100	0.1	1		471	
399 *9	A545	Orientation deceleration ratio	0 to 1000	1	20		471	
414	A800	PLC function operation selection	0 to 2	1	0		527	
415	A801	Inverter operation lock mode setting	0, 1	1	0		527	
416	A802	Pre-scale function selection	0 to 5	1	0		527	
417	A803	Pre-scale setting value	0 to 32767	1	1		527	
419	B000	Position command source selection	0 to 2	1	0		227, 239	
420	B001	Command pulse scaling factor numerator (electronic gear numerator)	1 to 32767	1	1		242	
421	B002	Command pulse multiplication denominator (electronic gear denominator)	1 to 32767	1	1		242	
422	B003	Position control gain	0 to 150 sec^{-1}	1 sec^{-1}	25 sec^{-1}		245	
423	B004	Position feed forward gain	0 to 100%	1%	0%		245	
424	B005	Position command acceleration/ deceleration time constant	0 to 50 s	0.001 s	0 s		242	
425	B006	Position feed forward command filter	0 to 5 s	0.001 s	0 s		245	
426	B007	In-position width	0 to 32767 pulse	1 pulse	100 pulse		244	
427	B008	Excessive level error	0 to 400K pulse, 9999	1K pulse	40K pulse		244	
428	B009	Command pulse selection	0 to 5	1	0		239	
429	B010	Clear signal selection	0, 1	1	1		239	
430	B011	Pulse monitor selection	0 to 5, 100 to 105, 1000 to 1005, 1100 to 1105, 8888, 9999	1	9999		239	
446	B012	Model position control gain	0 to 150 sec^{-1}	1 sec^{-1}	25 sec^{-1}		245	
450	C200	Second applied motor	0, 1, 3 to 6, 13 to 16, 20, 23, 24, 30, 33, 34, 40, 43, 44, 50, 53, 54, 70, 73, 74, 330, 333, 334, 8093, 8094, 9090, 9093, 9094, 9999	1	9999		424	
451	G300	Second motor control method selection	10 to 14, 20, 110 to 114, 9999	1	9999		160	

中正科技有限公司
購買、維修此手冊零組件
電話：037-466333
Email: service@repairtw.com
Line id: @zzzz
www.repairtw.com

Pr.	Pr. group	Name	Setting range	Minimum setting increments	Initial value FM	Initial value CA	Refer to page	Customer setting
453	C201	Second motor capacity	0.4 to 55 kW, 9999 *2 0 to 3600 kW, 9999 *3	0.01 kW *2 0.1 kW *3	9999		428, 438	
454	C202	Number of second motor poles	2, 4, 6, 8, 10, 12, 9999	1	9999		428, 438	
455	C225	Second motor excitation current	0 to 500 A, 9999 *2 0 to 3600 A, 9999 *3	0.01 A *2 0.1 A *3	9999		428	
456	C204	Rated second motor voltage	0 to 1000 V	0.1 V	200 V 400 V		428, 438	
457	C205	Rated second motor frequency	10 to 400 Hz, 9999	0.01 Hz	9999		428, 438	
458	C220	Second motor constant (R1)	0 to 50 Ω, 9999*2 0 to 400 mΩ, 9999 *3	0.001 Ω*2 0.01 mΩ *3	9999		428, 438	
459	C221	Second motor constant (R2)	0 to 50 Ω, 9999*2 0 to 400 mΩ, 9999 *3	0.001 Ω*2 0.01 mΩ *3	9999		428	
460	C222	Second motor constant (L1) / d-shaft inductance (Ld)	0 to 6000mH, 9999 *2 0 to 400mH, 9999 *3	0.1 mH *2 0.01 mH *3	9999		428, 438	
461	C223	Second motor constant (L2) / q-shaft inductance (Lq)	0 to 6000mH, 9999 *2 0 to 400mH, 9999 *3	0.1 mH *2 0.01 mH *3	9999		428, 438	
462	C224	Second motor constant (X)	0 to 100%, 9999	0.1% *2 0.01% *3	9999		428	
463	C210	Second motor auto tuning setting/ status	0, 1, 11, 101	1	0		428, 438	
464	B020	Digital position control sudden stop deceleration time	0 to 360 s	0.1 s	0 s		227	
465	B021	First target position lower 4 digits	0 to 9999	1	0		227	
466	B022	First target position upper 4 digits	0 to 9999	1	0		227	
467	B023	Second target position lower 4 digits	0 to 9999	1	0		227	
468	B024	Second target position upper 4 digits	0 to 9999	1	0		227	
469	B025	Third target position lower 4 digits	0 to 9999	1	0		227	
470	B026	Third target position upper 4 digits	0 to 9999	1	0		227	
471	B027	Fourth target position lower 4 digits	0 to 9999	1	0		227	
472	B028	Fourth target position upper 4 digits	0 to 9999	1	0		227	
473	B029	Fifth target position lower 4 digits	0 to 9999	1	0		227	
474	B030	Fifth target position upper 4 digits	0 to 9999	1	0		227	
475	B031	Sixth target position lower 4 digits	0 to 9999	1	0		227	
476	B032	Sixth target position upper 4 digits	0 to 9999	1	0		227	
477	B033	Seventh target position lower 4 digits	0 to 9999	1	0		227	
478	B034	Seventh target position upper 4 digits	0 to 9999	1	0		227	
479	B035	Eighth target position lower 4 digits	0 to 9999	1	0		227	
480	B036	Eighth target position upper 4 digits	0 to 9999	1	0		227	
481	B037	Ninth target position lower 4 digits	0 to 9999	1	0		227	
482	B038	Ninth target position upper 4 digits	0 to 9999	1	0		227	
483	B039	Tenth target position lower 4 digits	0 to 9999	1	0		227	
484	B040	Tenth target position upper 4 digits	0 to 9999	1	0		227	
485	B041	Eleventh target position lower 4 digits	0 to 9999	1	0		227	
486	B042	Eleventh target position upper 4 digits	0 to 9999	1	0		227	
487	B043	Twelfth target position lower 4 digits	0 to 9999	1	0		227	
488	B044	Twelfth target position upper 4 digits	0 to 9999	1	0		227	
489	B045	Thirteenth target position lower 4 digits	0 to 9999	1	0		227	
490	B046	Thirteenth target position upper 4 digits	0 to 9999	1	0		227	
491	B047	Fourteenth target position lower 4 digits	0 to 9999	1	0		227	
492	B048	Fourteenth target position upper 4 digits	0 to 9999	1	0		227	

上將科技有限公司
專業維修變頻器手冊零組件
電話： 037-466333
Email: service@repairtw.com
Line id: @repairtw
www.repairtw.com

Pr.	Pr. group	Name	Setting range	Minimum setting increments	Initial value		Refer to page	Customer setting
					FM	CA		
493	B049	Fifteenth target position lower 4 digits	0 to 9999	1	0		227	
494	B050	Fifteenth target position upper 4 digits	0 to 9999	1	0		227	
495	M500	Remote output selection	0, 1, 10, 11	1	0		384	
496	M501	Remote output data 1	0 to 4095	1	0		384	
497	M502	Remote output data 2	0 to 4095	1	0		384	
498	A804	PLC function flash memory clear	0 to 9999	1	0		527	
502	N013	Stop mode selection at communication error	0 to 3	1	0		541	
503	E710	Maintenance timer 1	0(1 to 9998)	1	0		274	
504	E711	Maintenance timer 1 warning output set time	0 to 9998, 9999	1	9999		274	
505	M001	Speed setting reference	1 to 590 Hz	0.01 Hz	60 Hz	50 Hz	344	
516	F400	S-pattern time at a start of acceleration	0.1 to 2.5 s	0.1 s	0.1 s		283	
517	F401	S-pattern time at a completion of acceleration	0.1 to 2.5 s	0.1 s	0.1 s		283	
518	F402	S-pattern time at a start of deceleration	0.1 to 2.5 s	0.1 s	0.1 s		283	
519	F403	S-pattern time at a completion of deceleration	0.1 to 2.5 s	0.1 s	0.1 s		283	
522	G105	Output stop frequency	0 to 590 Hz, 9999	0.01 Hz	9999		590	
539	N002	Modbus-RTU communication check time interval	0 to 999.8 s, 9999	0.1 s	9999		560	
547	N040	USB communication station number	0 to 31	1	0		574	
548	N041	USB communication check time interval	0 to 999.8 s, 9999	0.1 s	9999		574	
549	N000	Protocol selection	0, 1	1	0		541	
550	D012	NET mode operation command source selection	0, 1, 9999	1	9999		308	
551	D013	PU mode operation command source selection	1 to 3, 9999	1	9999		308	
552	H429	Frequency jump range	0 to 30 Hz, 9999	0.01 Hz	9999		335	
553	A603	PID deviation limit	0 to 100%, 9999	0.1%	9999		483	
554	A604	PID signal operation selection	0 to 3, 10 to 13	1	0		483	
555	E720	Current average time	0.1 to 1 s	0.1 s	1 s		275	
556	E721	Data output mask time	0 to 20 s	0.1 s	0 s		275	
557	E722	Current average value monitor signal output reference current	0 to 500 A*2	0.01 A*2	Rated inverter current		275	
			0 to 3600 A*3	0.1 A*3				
560	A712	Second frequency search gain	0 to 32767, 9999	1	9999		511	
561	H020	PTC thermistor protection level	0.5 to 30 kΩ, 9999	0.01 kΩ	9999		322	
563	M021	Energization time carrying-over times	(0 to 65535)	1	0		346	
564	M031	Operating time carrying-over times	(0 to 65535)	1	0		346	
569	G942	Second motor speed control gain	0 to 200%, 9999	0.1%	9999		167	
570	E301	Multiple rating setting	0 to 3 *11	1	2		258	
			1, 2 *12					
571	F103	Holding time at a start	0 to 10 s, 9999	0.1 s	9999		291	
573	A680 / T052	4 mA input check selection	1 to 4, 9999	1	9999		412	
574	C211	Second motor online auto tuning	0, 1	1	0		445	
575	A621	Output interruption detection time	0 to 3600 s, 9999	0.1 s	1 s		483	
576	A622	Output interruption detection level	0 to 590 Hz	0.01 Hz	0 Hz		483	
577	A623	Output interruption cancel level	900 to 1100%	0.1%	1000%		483	
592	A300	Traverse function selection	0 to 2	1	0		467	
593	A301	Maximum amplitude amount	0 to 25%	0.1%	10%		467	
594	A302	Amplitude compensation amount during deceleration	0 to 50%	0.1%	10%		467	
595	A303	Amplitude compensation amount during acceleration	0 to 50%	0.1%	10%		467	
596	A304	Amplitude acceleration time	0.1 to 3600 s	0.1 s	5 s		467	

上正科技有限公司
購買、維修此手冊零組件
電話： 037-466333
Email: service@repairtw.com
Line Id: @xxx
www.repairtw.com

Pr.	Pr. group	Name	Setting range	Minimum setting increments	Initial value FM	Initial value CA	Refer to page	Customer setting
597	A305	Amplitude deceleration time	0.1 to 3600 s	0.1 s	5 s		467	
598	H102	Undervoltage level	350 to 430 V, 9999	0.1 V	9999		330	
599	T721	X10 terminal input selection	0, 1	1	0		593	
600	H001	First free thermal reduction frequency 1	0 to 590 Hz, 9999	0.01 Hz	9999		322	
601	H002	First free thermal reduction ratio 1	0 to 100%	1%	100%		322	
602	H003	First free thermal reduction frequency 2	0 to 590 Hz, 9999	0.01 Hz	9999		322	
603	H004	First free thermal reduction ratio 2	0 to 100%	1%	100%		322	
604	H005	First free thermal reduction frequency 3	0 to 590 Hz, 9999	0.01 Hz	9999		322	
609	A624	PID set point/deviation input selection	1 to 5	1	2		483, 503	
610	A625	PID measured value input selection	1 to 5	1	3		483, 503	
611	F003	Acceleration time at a restart	0 to 3600 s, 9999	0.1 s	9999		511, 517	
639	A108	Brake opening current selection	0, 1	1	0		457	
640	A109	Brake operation frequency selection	0, 1	1	0		457	
641	A130	Second brake sequence operation selection	0, 7, 8, 9999	1	0		457	
642	A120	Second brake opening frequency	0 to 30 Hz	0.01 Hz	3 Hz		457	
643	A121	Second brake opening current	0 to 400%	0.1%	130%		457	
644	A122	Second brake opening current detection time	0 to 2 s	0.1 s	0.3 s		457	
645	A123	Second brake operation time at start	0 to 5 s	0.1 s	0.3 s		457	
646	A124	Second brake operation frequency	0 to 30 Hz	0.01 Hz	6 Hz		457	
647	A125	Second brake operation time at stop	0 to 5 s	0.1 s	0.3 s		457	
648	A126	Second deceleration detection function selection	0, 1	1	0		457	
650	A128	Second brake opening current selection	0, 1	1	0		457	
651	A129	Second brake operation frequency selection	0, 1	1	0		457	
653	G410	Speed smoothing control	0 to 200%	0.1%	0%		607	
654	G411	Speed smoothing cutoff frequency	0 to 120 Hz	0.01 Hz	20 Hz		607	
655	M530	Analog remote output selection	0, 1, 10, 11	1	0		385	
656	M531	Analog remote output 1	800 to 1200%	0.1%	1000%		385	
657	M532	Analog remote output 2	800 to 1200%	0.1%	1000%		385	
658	M533	Analog remote output 3	800 to 1200%	0.1%	1000%		385	
659	M534	Analog remote output 4	800 to 1200%	0.1%	1000%		385	
660	G130	Increased magnetic excitation deceleration operation selection	0, 1	1	0		601	
661	G131	Magnetic excitation increase rate	0 to 40%, 9999	0.1%	9999		601	
662	G132	Increased magnetic excitation current level	0 to 300%	0.1%	100%		601	
663	M060	Control circuit temperature signal output level	0 to 100°C	1°C	0°C		389	
665	G125	Regeneration avoidance frequency gain	0 to 200%	0.1%	100%		599	
668	A786	Power failure stop frequency gain	0 to 200%	0.1%	100%		523	
684	C000	Tuning data unit switchover	0, 1	1	0		428, 438	
686	E712	Maintenance timer 2	0 (1 to 9998)	1	0		274	

上正科技有限公司
購買、維修 此手冊零組件
電話： 037-466333
Email: service@repairtw.com
Line id: @zzzz
www.repairtw.com

Pr.	Pr. group	Name	Setting range	Minimum setting increments	Initial value		Refer to page	Customer setting
					FM	CA		
687	E713	Maintenance timer 2 warning output set time	0 to 9998, 9999	1	9999		274	
688	E714	Maintenance timer 3	0 (1 to 9998)	1	0		274	
689	E715	Maintenance timer 3 warning output set time	0 to 9998, 9999	1	9999		274	
690	H881	Deceleration check time	0 to 3600 s, 9999	0.1 s	1 s		203	
692	H011	Second free thermal reduction frequency 1	0 to 590 Hz, 9999	0.01 Hz	9999		322	
693	H012	Second free thermal reduction ratio 1	1 to 100%	1%	100%		322	
694	H013	Second free thermal reduction frequency 2	0 to 590 Hz, 9999	0.01 Hz	9999		322	
695	H014	Second free thermal reduction ratio 2	1 to 100%	1%	100%		322	
696	H015	Second free thermal reduction frequency 3	0 to 590 Hz, 9999	0.01 Hz	9999		322	
699	T740	Input terminal filter	5 to 50 ms, 9999	1 ms	9999		416	
702	C106	Maximum motor frequency	0 to 400 Hz, 9999	0.01 Hz	9999		438	
706	C106	Induced voltage constant (phi f)	0 to 5000 mV/(rad/s), 9999	0.1 mV/(rad/s)	9999		438	
707	C107	Motor inertia (integer)	10 to 999, 9999	1	9999		438	
711	C131	Motor Ld decay ratio	0 to 100%, 9999	0.1%	9999		438	
712	C132	Motor Lq decay ratio	0 to 100%, 9999	0.1%	9999		438	
717	C182	Starting resistance tuning compensation	0 to 200%, 9999	0.1%	9999		438	
721	C185	Starting magnetic pole position detection pulse width	0 to 6000 µs, 10000 to 16000 µs, 9999	1 µs	9999		438	
724	C108	Motor inertia (exponent)	0 to 7, 9999	1	9999		438	
725	C133	Motor protection current level	100 to 500%, 9999	0.1%	9999		438	
738	C230	Second motor induced voltage constant (phi f)	0 to 5000 mV/(rad/s), 9999	0.1 mV/(rad/s)	9999		438	
739	C231	Second motor Ld decay ratio	0 to 100%, 9999	0.1%	9999		438	
740	C232	Second motor Lq decay ratio	0 to 100%, 9999	0.1%	9999		438	
741	C282	Second starting resistance tuning compensation	0 to 200%, 9999	0.1%	9999		438	
742	C285	Second motor magnetic pole detection pulse width	0 to 6000 µs, 10000 to 16000 µs, 9999	1 µs	9999		438	
743	C206	Second motor maximum frequency	0 to 400 Hz, 9999	0.01 Hz	9999		438	
744	C207	Second motor inertia (integer)	10 to 999, 9999	1	9999		438	
745	C208	Second motor inertia (exponent)	0 to 7, 9999	1	9999		438	
746	C233	Second motor protection current level	100 to 500%, 9999	0.1%	9999		438	
747	G350	Second motor low-speed range torque characteristics	0, 9999	1	9999		173	
753	A650	Second PID action selection	0, 10, 11, 20, 21, 50, 51, 60, 61, 70, 71, 80, 81, 90, 91, 100, 101, 1000, 1001, 1010, 1011, 2000, 2001, 2010, 2011	1	0		483	
754	A652	Second PID control automatic switchover frequency	0 to 590 Hz, 9999	0.01 Hz	9999		483	
755	A651	Second PID action set point	0 to 100%, 9999	0.01%	9999		483	
756	A653	Second PID proportional band	0.1 to 1000%, 9999	0.1%	100%		483	
757	A654	Second PID integral time	0.1 to 3600 s, 9999	0.1 s	1 s		483	
758	A655	Second PID differential time	0.01 to 10 s, 9999	0.01 s	9999		483	
759	A600	PID unit selection	0 to 43, 9999	1	9999		496	
760	A616	Pre-charge fault selection	0, 1	1	0		499	
761	A617	Pre-charge ending level	0 to 100%, 9999	0.1%	9999		499	
762	A618	Pre-charge ending time	0 to 3600 s, 9999	0.1 s	9999		499	
763	A619	Pre-charge upper detection level	0 to 100%, 9999	0.1%	9999		499	
764	A620	Pre-charge time limit	0 to 3600 s, 9999	0.1 s	9999		499	
765	A656	Second pre-charge fault selection	0, 1	1	0		499	

大正科技有限公司
購買、維修 此手冊零組件
電話：03-466233
Email: service@repairtw.com
Line id: @zzzz
www.repairtw.com

Pr.	Pr. group	Name	Setting range	Minimum setting increments	Initial value		Refer to page	Customer setting
					FM	CA		
766	A657	Second pre-charge ending level	0 to 100%, 9999	0.1%	9999		499	
767	A658	Second pre-charge ending time	0 to 3600 s, 9999	0.1 s	9999		499	
768	A659	Second pre-charge upper detection level	0 to 100%, 9999	0.1%	9999		499	
769	A660	Second pre-charge time limit	0 to 3600 s, 9999	0.1 s	9999		499	
774	M101	Operation panel monitor selection 1	1 to 3, 5 to 14, 17 to 20, 22 to 35, 38, 40 to 45, 50 to 57, 61, 62, 64, 67, 87 to 98, 100, 9999	1	9999		346	
775	M102	Operation panel monitor selection 2		1	9999		346	
776	M103	Operation panel monitor selection 3		1	9999		346	
777	A681 T053	4 mA input fault operation frequency	0 to 590 Hz, 9999	0.01 Hz	9999		412	
778	A682 T054	Current input check filter	0 to 10 s	0.01 s	0 s		412	
779	N014	Operation frequency during communication error	0 to 590 Hz, 9999	0.01 Hz	9999		541	
788	G250	Low speed range torque characteristic selection	0, 9999	1	9999		173	
791	F070	Acceleration time in low-speed range	0 to 3600 s, 9999	0.1 s	9999		278	
792	F071	Deceleration time in low-speed range	0 to 3600 s, 9999	0.1 s	9999		278	
799	M520	Pulse increment setting for output power	0.1, 1, 10, 100, 1000 kWh	0.1 kWh	1 kWh		388	
800	G200	Control method selection	0 to 6, 9 to 14, 20, 100 to 106, 109 to 114, 140 to 145	1	20		160	
802	G102	Pre-excitation selection	0, 1	1	0		584	
803	G210	Constant power range torque characteristic selection	0, 1, 10, 11	1	0		181, 211	
804	D400	Torque command source selection	0, 1, 3 to 6	1	0		211	
805	D401	Torque command value (RAM)	600 to 1400%	1%	1000%		211	
806	D402	Torque command value (RAM,EEPROM)	600 to 1400%	1%	1000%		211	
807	H410	Speed limit selection	0 to 2	1	0		213	
808	H411	Forward rotation speed limit/speed limit	0 to 400 Hz	0.01 Hz	60 Hz	50 Hz	213	
809	H412	Reverse rotation speed limit/ reverse-side speed limit	0 to 400 Hz, 9999	0.01 Hz	9999		213	
810	H700	Torque limit input method selection	0, 1	1	0		181	
811	D030	Set resolution switchover	0, 1, 10, 11	1	0		181, 344	
812	H701	Torque limit level (regeneration)	0 to 400%, 9999	0.1%	9999		181	
813	H702	Torque limit level (3rd quadrant)	0 to 400%, 9999	0.1%	9999		181	
814	H703	Torque limit level (4th quadrant)	0 to 400%, 9999	0.1%	9999		181	
815	H710	Torque limit level 2	0 to 400%, 9999	0.1%	9999		181	
816	H720	Torque limit level during acceleration	0 to 400%, 9999	0.1%	9999		181	
817	H721	Torque limit level during deceleration	0 to 400%, 9999	0.1%	9999		181	
818	C112	Easy gain tuning response level setting	1 to 15	1	2		188	
819	C113	Easy gain tuning selection	0 to 2	1	0		188	
820	G211	Speed control P gain 1	0 to 1000%	1%	60%		188	
821	G212	Speed control integral time 1	0 to 20 s	0.001 s	0.333 s		188	
822	T003	Speed setting filter 1	0 to 5 s, 9999	0.001 s	9999		398	
823 *9	G215	Speed detection filter 1	0 to 0.1 s	0.001 s	0.001 s		248	
824	G213	Torque control P gain 1 (current loop proportional gain)	0 to 500%	1%	100%		219	
825	G214	Torque control integral time 1 (current loop integral time)	0 to 500 ms	0.1 ms	5 ms		219	
826	T004	Torque setting filter 1	0 to 5 s, 9999	0.001 s	9999		398	
827	G216	Torque detection filter 1	0 to 0.1 s	0.001 s	0 s		248	

上正科技有限公司
購買、維修此手冊零組件
電話： 037-466333
Email: service@repairtw.com
Line id: @2222
www.repairtw.com

Pr.	Pr. group	Name	Setting range	Minimum setting increments	Initial value FM	Initial value CA	Refer to page	Customer setting
828	G224	Model speed control gain	0 to 1000%	1%	60%		196, 245	
830	G311	Speed control P gain 2	0 to 1000%, 9999	1%	9999		188	
831	G312	Speed control integral time 2	0 to 20 s, 9999	0.001 s	9999		188	
832	T005	Speed setting filter 2	0 to 5 s, 9999	0.001 s	9999		398	
833 *9	G315	Speed detection filter 2	0 to 0.1 s, 9999	0.001 s	9999		248	
834	G313	Torque control P gain 2	0 to 500%, 9999	1%	9999		219	
835	G314	Torque control integral time 2	0 to 500 ms, 9999	0.1 ms	9999		219	
836	T006	Torque setting filter 2	0 to 5 s, 9999	0.001 s	9999		398	
837	G316	Torque detection filter 2	0 to 0.1 s, 9999	0.001 s	9999		248	
840 *9	G230	Torque bias selection	0 to 3, 24, 25, 9999	1	9999		198	
841 *9	G231	Torque bias 1	600 to 1400%, 9999	1%	9999		198	
842 *9	G232	Torque bias 2	600 to 1400%, 9999	1%	9999		198	
843 *9	G233	Torque bias 3	600 to 1400%, 9999	1%	9999		198	
844 *9	G234	Torque bias filter	0 to 5s, 9999	0.001 s	9999		198	
845 *9	G235	Torque bias operation time	0 to 5s, 9999	0.01 s	9999		198	
846 *9	G236	Torque bias balance compensation	0 to 10 V, 9999	0.1 V	9999		198	
847 *9	G237	Fall-time torque bias terminal 1 bias	0 to 400%, 9999	1%	9999		198	
848 *9	G238	Fall-time torque bias terminal 1 gain	0 to 400%, 9999	1%	9999		198	
849	T007	Analog input offset adjustment	0 to 200%	0.1%	100%		398	
850	G103	Brake operation selection	0 to 2	1	0		584	
853 *9	H417	Speed deviation time	0 to 100 s	0.1 s	1 s		202	
854	G217	Excitation ratio	0 to 100%	1%	100%		249	
858	T040	Terminal 4 function assignment	0, 1, 4, 9999	1	0		181, 336, 395	
859	C126	Torque current/Rated PM motor current	0 to 500 A, 9999 *2 0 to 3600 A, 9999 *3	0.01 A *2 0.1 A *3	9999		428, 438	
860	C226	Second motor torque current/Rated PM motor current	0 to 500 A, 9999 *2 0 to 3600 A, 9999 *3	0.01 A *2 0.1 A *3	9999		428, 438	
864	M470	Torque detection	0 to 400%	0.1%	150%		383	
865	M446	Low speed detection	0 to 590 Hz	0.01 Hz	1.5 Hz		378	
866	M042	Torque monitoring reference	0 to 400%	0.1%	150%		356	
867	M321	AM output filter	0 to 5 s	0.01 s	0.01 s		361	
868	T010	Terminal 1 function assignment	0 to 6, 9999	1	0		181, 336, 395	
869	M334	Current output filter	0 to 5 s	0.01 s	-	0.02 s	361	
870	M440	Speed detection hysteresis	0 to 5 Hz	0.01 Hz	0 Hz		378	
872	H201	Input phase loss protection selection	0, 1	1	0		331	
873 *9	H415	Speed limit	0 to 400 Hz	0.01 Hz	20 Hz		202	
874	H730	OLT level setting	0 to 400%	0.1%	150%		181	
875	H030	Fault definition	0, 1	1	0		328	
877	G220	Speed feed forward control/model adaptive speed control selection	0 to 2	1	0		196, 245	
878	G221	Speed feed forward filter	0 to 1 s	0.01 s	0 s		196	
879	G222	Speed feed forward torque limit	0 to 400%	0.1%	150%		196	
880	C114	Load inertia ratio	0 to 200 times	0.1	7		188, 196, 245	
881	G223	Speed feed forward gain	0 to 1000%	1%	0%		196	
882	G120	Regeneration avoidance operation selection	0 to 2	1	0		599	
883	G121	Regeneration avoidance operation level	300 to 800 V	0.1V	DC380 V *7 DC760 V *8		599	
884	G122	Regeneration avoidance at deceleration detection sensitivity	0 to 5	1	0		599	
885	G123	Regeneration avoidance compensation frequency limit value	0 to 590 Hz, 9999	0.01 Hz	6 Hz		599	

上正科技有限公司
購買、維修 此手冊零組件
電話： 03-4561133
Email: service@repair.tw.com
Line id: @szzzz
www.repair.tw.com

Pr.	Pr. group	Name	Setting range	Minimum setting increments	Initial value		Refer to page	Customer setting
					FM	CA		
886	G124	Regeneration avoidance voltage gain	0 to 200%	0.1%	100%		599	
888	E420	Free parameter 1	0 to 9999	1	9999		264	
889	E421	Free parameter 2	0 to 9999	1	9999		264	
891	M023	Cumulative power monitor digit shifted times	0 to 4, 9999	1	9999		346, 365	
892	M200	Load factor	30 to 150%	0.1%	100%		365	
893	M201	Energy saving monitor reference (motor capacity)	0.1 to 55 kW *2 0 to 3600 kW *3	0.01 kW *2 0.1 kW *3	Rated inverter capacity		365	
894	M202	Control selection during commercial power-supply operation	0 to 3	1	0		365	
895	M203	Power saving rate reference value	0, 1, 9999	1	9999		365	
896	M204	Power unit cost	0 to 500, 9999	0.01	9999		365	
897	M205	Power saving monitor average time	0 to 1000 h, 9999	1 h	9999		365	
898	M206	Power saving cumulative monitor clear	0, 1, 10, 9999	1	9999		365	
899	M207	Operation time rate (estimated value)	0 to 100%, 9999	0.1%	9999		365	
C0 (900) *10	M310	FM/CA terminal calibration	-	-	-		361	
C1 (901) *10	M320	AM terminal calibration	-	-	-		361	
C2 (902) *10	T200	Terminal 2 frequency setting bias frequency	0 to 590 Hz	0.01 Hz	0 Hz		400	
C3 (902) *10	T201	Terminal 2 frequency setting bias	0 to 300%	0.1%	0%		400	
125 (903) *10	T202	Terminal 2 frequency setting gain frequency	0 to 590 Hz	0.01 Hz	60 Hz	50 Hz	400	
C4 (903) *10	T203	Terminal 2 frequency setting gain	0 to 300%	0.1%	100%		400	
C5 (904) *10	T400	Terminal 4 frequency setting bias frequency	0 to 590 Hz	0.01 Hz	0 Hz		400	
C6 (904) *10	T401	Terminal 4 frequency setting bias	0 to 300%	0.1%	20%		400	
126 (905) *10	T402	Terminal 4 frequency setting gain frequency	0 to 590 Hz	0.01 Hz	60 Hz	50 Hz	400	
C7 (905) *10	T403	Terminal 4 frequency setting gain	0 to 300%	0.1%	100%		400	
C12 (917) *10	T100	Terminal 1 bias frequency (speed)	0 to 590 Hz	0.01 Hz	0 Hz		400	
C13 (917) *10	T101	Terminal 1 bias (speed)	0 to 300%	0.1%	0%		400	
C14 (918) *10	T102	Terminal 1 gain frequency (speed)	0 to 590 Hz	0.01 Hz	60 Hz	50 Hz	400	

上正科技有限公司
購買、維修 此手冊零組件
電話： 037-466333
Email: service@repairtw.com
Line id: @zzzz
www.repairtw.com

Pr.	Pr. group	Name	Setting range	Minimum setting increments	Initial value		Refer to page	Customer setting
					FM	CA		
C15 (918) *10	T103	Terminal 1 gain (speed)	0 to 300%	0.1%	100%		400	
C16 (919) *10	T110	Terminal 1 bias command (torque/ magnetic flux)	0 to 400%	0.1%	0%		406	
C17 (919) *10	T111	Terminal 1 bias (torque/magnetic flux)	0 to 300%	0.1%	0%		406	
C18 (920) *10	T112	Terminal 1 gain command (torque/ magnetic flux)	0 to 400%	0.1%	150%		406	
C19 (920) *10	T113	Terminal 1 gain (torque/magnetic flux)	0 to 300%	0.1%	100%		406	
C8 (930) *10	M330	Current output bias signal	0 to 100%	0.1%	-	0%	361	
C9 (930) *10	M331	Current output bias current	0 to 100%	0.1%	-	0%	361	
C10 (931) *10	M332	Current output gain signal	0 to 100%	0.1%	-	100%	361	
C11 (931) *10	M333	Current output gain current	0 to 100%	0.1%	-	100%	361	
C38 (932) *10	T410	Terminal 4 bias command (torque/ magnetic flux)	0 to 400%	0.1%	0%		406	
C39 (932) *10	T411	Terminal 4 bias (torque/magnetic flux)	0 to 300%	0.1%	20%		406	
C40 (933) *10	T412	Terminal 4 gain command (torque/ magnetic flux)	0 to 400%	0.1%	150%		406	
C41 (933) *10	T413	Terminal 4 gain (torque/magnetic flux)	0 to 300%	0.1%	100%		406	
C42 (934) *10	A630	PID display bias coefficient	0 to 500, 9999	0.01	9999		496	
C43 (934) *10	A631	PID display bias analog value	0 to 300%	0.1%	20%		496	
C44 (935) *10	A632	PID display gain coefficient	0 to 500, 9999	0.01	9999		496	
C45 (935) *10	A633	PID display gain analog value	0 to 300%	0.1%	100%		496	
977	E302	Input voltage mode selection	0, 1	1	0		259	
989	E490	Parameter copy alarm release	10 *2 100 *3	1	10 *2 100 *3		609	
990	E104	PU buzzer control	0, 1	1	1		254	
991	E105	PU contrast adjustment	0 to 63	1	58		254	

上正科技有限公司
購買、維修 此手冊零組件
電話： 037-466333
Email: service@repairtw.com
Line id: @zzzz
www.repairtw.com

Pr.	Pr. group	Name	Setting range	Minimum setting increments	Initial value		Refer to page	Customer setting
					FM	CA		
992	M104	Operation panel setting dial push monitor selection	0 to 3, 5 to 14, 17 to 20, 22 to 35, 38, 40 to 45, 50 to 57, 61, 62, 64, 67, 87 to 98, 100	1	0		346	
994	G403	Droop break point gain	0.1 to 100%, 9999	0.1%	9999		605	
995	G404	Droop break point torque	0.1 to 100%	0.1%	100%		605	
997	H103	Fault initiation	0 to 255, 9999	1	9999		330	
998	E430	PM parameter initialization Simple	0, 3003, 3103, 8009, 8109, 9009, 9109	1	0		169	
999	E431	Automatic parameter setting Simple	1, 2, 10, 11, 12, 13, 20, 21, 9999	1	9999		264	
1002	C150	Lq tuning target current adjustment coefficient	50 to 150%, 9999	0.1%	9999		438	
1003	G601	Notch filter frequency	0, 8 to 1250 Hz	1 Hz	0		204	
1004	G602	Notch filter depth	0 to 3	1	0		204	
1005	G603	Notch filter width	0 to 3	1	0		204	
1006	E020	Clock (year)	2000 to 2099	1	2000		251	
1007	E021	Clock (month, day)	1/1 to 12/31	1	101		251	
1008	E022	Clock (hour, minute)	0:00 to 23:59	1	0		251	
1020	A900	Trace operation selection	0 to 4	1	0		529	
1021	A901	Trace mode selection	0 to 2	1	0		529	
1022	A902	Sampling cycle	0 to 9	1	2		529	
1023	A903	Number of analog channels	1 to 8	1	4		529	
1024	A904	Sampling auto start	0, 1	1	0		529	
1025	A905	Trigger mode selection	0 to 4	1	0		529	
1026	A906	Number of sampling before trigger	0 to 100%	1%	90%		529	
1027	A910	Analog source selection (1ch)	1 to 3, 5 to 14, 17 to 20, 22 to 24, 32 to 35, 40 to 42, 52 to 54, 61, 62, 64, 67, 70, 87 to 98, 201 to 213, 222 to 227, 230 to 232, 235 to 238	1	201		529	
1028	A911	Analog source selection (2ch)			202		529	
1029	A912	Analog source selection (3ch)			203		529	
1030	A913	Analog source selection (4ch)			204		529	
1031	A914	Analog source selection (5ch)			205		529	
1032	A915	Analog source selection (6ch)			206		529	
1033	A916	Analog source selection (7ch)			207		529	
1034	A917	Analog source selection (8ch)			208		529	
1035	A918	Analog trigger channel	1 to 8	1	1		529	
1036	A919	Analog trigger operation selection	0, 1	1	0		529	
1037	A920	Analog trigger level	600 to 1400	1	1000		529	
1038	A930	Digital source selection (1ch)	1 to 255	1	1		529	
1039	A931	Digital source selection (2ch)			2		529	
1040	A932	Digital source selection (3ch)			3		529	
1041	A933	Digital source selection (4ch)			4		529	
1042	A934	Digital source selection (5ch)			5		529	
1043	A935	Digital source selection (6ch)			6		529	
1044	A936	Digital source selection (7ch)			7		529	
1045	A937	Digital source selection (8ch)			8		529	
1046	A938	Digital trigger channel	1 to 8	1	1		529	
1047	A939	Digital trigger operation selection	0, 1	1	0		529	
1048	E106	Display-off waiting time	0 to 60 min	1 min	0		255	
1049	E110	USB host reset	0, 1	1	0		628	
1072	A310	DC brake judgment time for vibration control operation	0 to 10 s	0.1 s	3 s		469	
1073	A311	Vibration control operation selection	0, 1	1	0		469	

上正科技有限公司
購買、維修此手冊零組件
電話： 037-466333
Email: service@repairtw.com
Line Id: @2222
www.repairtw.com

Pr.	Pr. group	Name	Setting range	Minimum setting increments	Initial value		Refer to page	Customer setting
					FM	CA		
1074	A312	Vibration suppression frequency	0.05 to 3 Hz, 9999	0.001 Hz	1 Hz		469	
1075	A313	Vibration suppression depth	0 to 3	1	0		469	
1076	A314	Vibration suppression width	0 to 3	1	0		469	
1077	A315	Rope length	0.1 to 50 m	0.1 m	1 m		469	
1078	A316	Trolley weight	1 to 50000 Kg	1 Kg	1 Kg		469	
1079	A317	Load weight	1 to 50000 Kg	1 Kg	1 Kg		469	
1103	F040	Deceleration time at emergency stop	0 to 3600 s	0.1 s	5 s		278	
1106	M050	Torque monitor filter	0 to 5 s, 9999	0.01 s	9999		346	
1107	M051	Running speed monitor filter	0 to 5 s, 9999	0.01 s	9999		346	
1108	M052	Excitation current monitor filter	0 to 5 s, 9999	0.01 s	9999		346	
1113	H414	Speed limit method selection	0 to 2, 10, 9999	1	0		213	
1114	D403	Torque command reverse selection	0, 1	1	1		211	
1115	G218	Speed control integral term clear time	0 to 9998 ms	1 ms	0 s		188	
1116	G206	Constant output range speed control P gain compensation	0 to 100%	0.1%	0%		188	
1117	G261	Speed control P gain 1 (per-unit system)	0 to 300, 9999	0.01	9999		188	
1118	G361	Speed control P gain 2 (per-unit system)	0 to 300, 9999	0.01	9999		188	
1119	G262	Model speed control gain (per-unit system)	0 to 300, 9999	0.01	9999		196	
1121	G260	Per-unit speed control reference frequency	0 to 400 Hz	0.01 Hz	120 Hz *2		188	
					60 Hz *3			
1134	A605	PID upper limit manipulated value	0 to 100%	0.1%	100%		503	
1135	A606	PID lower limit manipulated value	0 to 100%	0.1%	100%		503	
1136	A670	Second PID display bias coefficient	0 to 500, 9999	0.01	9999		496	
1137	A671	Second PID display bias analog value	0 to 300%	0.1%	20%		496	
1138	A672	Second PID display gain coefficient	0 to 500, 9999	0.01	9999		496	
1139	A673	Second PID display gain analog value	0 to 300%	0.1%	100%		496	
1140	A664	Second PID set point/deviation input selection	1 to 5	1	2		483	
1141	A665	Second PID measured value input selection	1 to 5	1	3		483	
1142	A640	Second PID unit selection	0 to 43, 9999	1	9999		483	
1143	A641	Second PID upper limit	0 to 100%, 9999	0.1%	9999		483	
1144	A642	Second PID lower limit	0 to 100%, 9999	0.1%	9999		483	
1145	A643	Second PID deviation limit	0 to 100%, 9999	0.1%	9999		483	
1146	A644	Second PID signal operation selection	0 to 3, 10 to 13	1	0		483	
1147	A661	Second output interruption detection time	0 to 3600 s, 9999	0.1 s	1		483	
1148	A662	Second output interruption detection level	0 to 590 Hz	0.01 Hz	0 Hz		483	
1149	A663	Second output interruption cancel level	900 to 1100%	0.1%	1000%		483	
1150 to 1199	A810 to A859	PLC function user parameters 1 to 50	0 to 65535	1	0		527	
1220	B100	Target position/speed selection	0 to 2	1	0		710	
1221	B101	Start command edge detection selection	0, 1	1	0		227	
1222	B120	First positioning acceleration time	0.01 to 360 s	0.01 s	5 s		227	
1223	B121	First positioning deceleration time	0.01 to 360 s	0.01 s	5 s		227	
1224	B122	First positioning dwell time	0 to 20000 ms	1 ms	0 ms		227	

上正科技有限公司
購買、維修 此手冊零組件
電話： 037-466333
Email: service@repairtw.com
Line id: @2222
www.repairtw.com

Pr.	Pr. group	Name	Setting range	Minimum setting increments	Initial value		Refer to page	Customer setting
					FM	CA		
1225	B123	First positioning sub-function	0, 1, 10, 11, 100, 101, 110, 111	1	10		227	
1226	B124	Second positioning acceleration time	0.01 to 360 s	0.01 s	5 s		227	
1227	B125	Second positioning deceleration time	0.01 to 360 s	0.01 s	5 s		227	
1228	B126	Second positioning dwell time	0 to 20000 ms	1 ms	0 ms		227	
1229	B127	Second positioning sub-function	0, 1, 10, 11, 100, 101, 110, 111	1	10		227	
1230	B128	Third positioning acceleration time	0.01 to 360 s	0.01 s	5 s		227	
1231	B129	Third positioning deceleration time	0.01 to 360 s	0.01 s	5 s		227	
1232	B130	Third positioning dwell time	0 to 20000 ms	1 ms	0 ms		227	
1233	B131	Third positioning sub-function	0, 1, 10, 11, 100, 101, 110, 111	1	10		227	
1234	B132	Fourth positioning acceleration time	0.01 to 360 s	0.01 s	5 s		227	
1235	B133	Fourth positioning deceleration time	0.01 to 360 s	0.01 s	5 s		227	
1236	B134	Fourth positioning dwell time	0 to 20000 ms	1 ms	0 ms		227	
1237	B135	Fourth positioning sub-function	0, 1, 10, 11, 100, 101, 110, 111	1	10		227	
1238	B136	Fifth positioning acceleration time	0.01 to 360 s	0.01 s	5 s		227	
1239	B137	Fifth positioning deceleration time	0.01 to 360 s	0.01 s	5 s		227	
1240	B138	Fifth positioning dwell time	0 to 20000 ms	1 ms	0 ms		227	
1241	B139	Fifth positioning sub-function	0, 1, 10, 11, 100, 101, 110, 111	1	10		227	
1242	B140	Sixth positioning acceleration time	0.01 to 360 s	0.01 s	5 s		227	
1243	B141	Sixth positioning deceleration time	0.01 to 360 s	0.01 s	5 s		227	
1244	B142	Sixth positioning dwell time	0 to 20000 ms	1 ms	0 ms		227	
1245	B143	Sixth positioning sub-function	0, 1, 10, 11, 100, 101, 110, 111	1	10		227	
1246	B144	Seventh positioning acceleration time	0.01 to 360 s	0.01 s	5 s		227	
1247	B145	Seventh positioning deceleration time	0.01 to 360 s	0.01 s	5 s		227	
1248	B146	Seventh positioning dwell time	0 to 20000 ms	1 ms	0 ms		227	
1249	B147	Seventh positioning sub-function	0, 1, 10, 11, 100, 101, 110, 111	1	10		227	
1250	B148	Eighth positioning acceleration time	0.01 to 360 s	0.01 s	5 s		227	
1251	B149	Eighth positioning deceleration time	0.01 to 360 s	0.01 s	5 s		227	
1252	B150	Eighth positioning dwell time	0 to 20000 ms	1 ms	0 ms		227	
1253	B151	Eighth positioning sub-function	0, 1, 10, 11, 100, 101, 110, 111	1	10		227	
1254	B152	Ninth positioning acceleration time	0.01 to 360 s	0.01 s	5 s		227	
1255	B153	Ninth positioning deceleration time	0.01 to 360 s	0.01 s	5 s		227	
1256	B154	Ninth positioning dwell time	0 to 20000 ms	1 ms	0 ms		227	
1257	B155	Ninth positioning sub-function	0, 1, 10, 11, 100, 101, 110, 111	1	10		227	
1258	B156	Tenth positioning acceleration time	0.01 to 360 s	0.01 s	5 s		227	
1259	B157	Tenth positioning deceleration time	0.01 to 360 s	0.01 s	5 s		227	
1260	B158	Tenth positioning dwell time	0 to 20000 ms	1 ms	0 ms		227	
1261	B159	Tenth positioning sub-function	0, 1, 10, 11, 100, 101, 110, 111	1	10		227	
1262	B160	Eleventh positioning acceleration time	0.01 to 360 s	0.01 s	5 s		227	
1263	B161	Eleventh positioning deceleration time	0.01 to 360 s	0.01 s	5 s		227	
1264	B162	Eleventh positioning dwell time	0 to 20000 ms	1 ms	0 ms		227	
1265	B163	Eleventh positioning sub-function	0, 1, 10, 11, 100, 101, 110, 111	1	10		227	

上正科技有限公司
購買、維修 外手冊零組件
電話：037466533
Email: service@mpidtw.com
line id @zzzz
www.repairtw.com

Pr.	Pr. group	Name	Setting range	Minimum setting increments	Initial value FM	Initial value CA	Refer to page	Customer setting
1266	B164	Twelfth positioning acceleration time	0.01 to 360 s	0.01 s	5 s		227	
1267	B165	Twelfth positioning deceleration time	0.01 to 360 s	0.01 s	5 s		227	
1268	B166	Twelfth positioning dwell time	0 to 20000 ms	1 ms	0 ms		227	
1269	B167	Twelfth positioning sub-function	0, 1, 10, 11, 100, 101, 110, 111	1	10		227	
1270	B168	Thirteenth positioning acceleration time	0.01 to 360 s	0.01 s	5 s		227	
1271	B169	Thirteenth positioning deceleration time	0.01 to 360 s	0.01 s	5 s		227	
1272	B170	Thirteenth positioning dwell time	0 to 20000 ms	1 ms	0 ms		227	
1273	B171	Thirteenth positioning sub-function	0, 1, 10, 11, 100, 101, 110, 111	1	10		227	
1274	B172	Fourteenth positioning acceleration time	0.01 to 360 s	0.01 s	5 s		227	
1275	B173	Fourteenth positioning deceleration time	0.01 to 360 s	0.01 s	5 s		227	
1276	B174	Fourteenth positioning dwell time	0 to 20000 ms	1 ms	0 ms		227	
1277	B175	Fourteenth positioning sub-function	0, 1, 10, 11, 100, 101, 110, 111	1	10		227	
1278	B176	Fifteenth positioning acceleration time	0.01 to 360 s	0.01 s	5 s		227	
1279	B177	Fifteenth positioning deceleration time	0.01 to 360 s	0.01 s	5 s		227	
1280	B178	Fifteenth positioning dwell time	0 to 20000 ms	1 ms	0 ms		227	
1281	B179	Fifteenth positioning sub-function	0, 10, 100, 110	1	10		227	
1282	B180	Home position return method selection	0 to 6	1	4		227	
1283	B181	Home position return speed	0 to 30 Hz	0.01 Hz	2 Hz		227	
1284	B182	Home position return creep speed	0 to 10 Hz	0.01 Hz	0.5 Hz		227	
1285	B183	Home position shift amount lower 4 digits	0 to 9999	1	0		227	
1286	B184	Home position shift amount upper 4 digits	0 to 9999	1	0		227	
1287	B185	Travel distance after proximity dog ON lower 4 digits	0 to 9999	1	2048		227	
1288	B186	Travel distance after proximity dog ON upper 4 digits	0 to 9999	1	0		227	
1289	B187	Home position return stopper torque	0 to 200%	0.1%	40%		227	
1290	B188	Home position return stopper waiting time	0 to 10 s	0.1 s	0.5 s		227	
1292	B190	Position control terminal input selection	0, 1	1	0		227	
1293	B191	Roll feeding mode selection	0, 1	1	0		227	
1294	B192	Position detection lower 4 digits	0 to 9999	1	0		244	
1295	B193	Position detection upper 4 digits	0 to 9999	1	0		244	
1296	B194	Position detection selection	0 to 2	1	0		244	
1297	B195	Position detection hysteresis width	0 to 32767	1	0		244	
1300 to 1343, 1350 to 1359	N500 to N543, N550 to N559	Communication option parameters. For details, refer to the Instruction Manual of the option.						
Pr.CLR		Parameter clear	(0), 1	1	0		608	
ALL.CL		All parameter clear	(0), 1	1	0		608	
Err.CL		Fault history clear	(0), 1	1	0		619	
Pr.CPY		Parameter copy	(0), 1 to 3	1	0		609	
Pr.CHG		Initial value change list	—	1	0		615	
IPM		IPM initialization	0, 3003	1	0		169	

上正科技有限公司
購買、維修 此手冊零組件
電話： 037-466333
Email: service@repairtw.com
Line id: @zzzz
www.repairtw.com

Pr.	Pr. group	Name	Setting range	Minimum setting increments	Initial value		Refer to page	Customer setting
					FM	CA		
AUTO		Automatic parameter setting	—	—	—		264	
Pr.MD		Group parameter setting	(0), 1, 2	1	0		144	

∗1 Differ according to capacities.
6%: FR-A820-00077(0.75K) or lower, FR-A840-00038(0.75K) or lower
4%: FR-A820-00105(1.5K) to FR-A820-00250(3.7K), FR-A840-00052(1.5K) to FR-A840-00126(3.7K)
3%: FR-A820-00340(5.5K), FR-A820-00490(7.5K), FR-A840-00170(5.5K), FR-A840-00250(7.5K)
2%: FR-A820-00630(11K) to FR-A820-03160(55K), FR-A840-00310(11K) to FR-A840-01800(55K)
1%: FR-A820-03800(75K) or higher, FR-A840-02160(75K) or higher
∗2 The setting range or initial value for the FR-A820-03160(55K) or lower and FR-A840-01800(55K) or lower.
∗3 The setting range or initial value for the FR-A820-03800(75K) or higher and FR-A840-02160(75K) or higher.
∗4 The initial value for the FR-A820-00490(7.5K) or lower and FR-A840-00250(7.5K) or lower.
∗5 The initial value for the FR-A820-00630(11K) or higher and FR-A840-00310(11K) or higher.
∗6 Differ according to capacities.
4%: FR-A820-00490(7.5K) or lower, FR-A840-00250(7.5K) or lower
2%: FR-A820-00630(11K) to FR-A820-03160(55K), FR-A840-00310(11K) to FR-A840-01800(55K)
1%: FR-A820-03800(75K) or higher, FR-A840-02160(75K) or higher
∗7 The value for the 200 V class.
∗8 The value for the 400 V class.
∗9 Setting can be made only when the FR-A8AP is mounted.
∗10 The parameter number in parentheses is the one for use with the parameter unit (FR-PU07).
∗11 The setting range for the standard model.
∗12 The setting range for the IP55 compatible model.
∗13 The setting is available for the standard model only.

上正科技有限公司
購買、維修 此手冊零組件
電話： 037-466333
Email: service@repairtw.com
Line id: @zzzz
www.repairtw.com

5.1.2 Group parameter display

Parameter numbers can be changed to grouped parameter numbers.
Parameters are grouped by their functions. The related parameters can be set easily.

(1) Changing to the grouped parameter numbers

Pr.MD setting value	Description
0	Default parameter display method
1	Parameter display by parameter number
2	Parameter display by function group

Operation

1. Screen at power-ON
The monitor display appears.

2. Parameter setting mode
Press [MODE] to choose the parameter setting mode. (The parameter number read previously appears.)

3. Selecting the parameter number
Turn  until "PrMd" (parameter display method) appears.
Press [SET]. "0" (initial value) will appear.

4. Changing to the group parameter display
Turn  to change the set value to "2" (group parameter display). Press [SET] to select the group parameter setting.
"2" and "PrMd" flicker alternately after the setting is completed.

上正科技有限公司
購買、維修 此手冊零組件
電話： 037-466333
Email: service@repairtw.com
Line id: @zzzz
www.repairtw.com

(2) Changing parameter settings in the group parameter display

Changing example | Change the **P.H400(Pr.1) Maximum frequency**.

Operation

1. Screen at power-ON
The monitor display appears.

2. Changing the operation mode
Press [PU/EXT] to choose the PU operation mode. [PU] indicator is on.

3. Parameter setting mode
Press [MODE] to choose the parameter setting mode. (The parameter number read previously appears.)

4. Parameter group selection
Press [ESC] several times until "PH0 . ." appears. Parameter groups can now be selected.

5. Parameter group selection
Turn  until "PH4 . ." (protective function parameter 4) appears. Press [SET] to display "PH4 - - - -" and make the group parameters of the protective function parameter 4 selectable.

6. Parameter selection
Turn  until "PH400" (**P.H400 Maximum frequency**) appears. Press [SET] to read the present set value.
" 120.00 " (initial value) appears.

7. Changing the setting value
Turn  to change the set value to "60.00". Press [SET] to enter the setting. "60.00" and "PH400" flicker alternately after the setting is completed.

5.1.3 Parameter list (by function group)

◆ E: Environment setting parameters

Parameters that set the inverter operation characteristics.

Pr. group	Pr.	Name	Refer to page
E000	168	Parameter for manufacturer setting. Do not set.	
E001	169	Parameter for manufacturer setting. Do not set.	
E020	1006	Clock (year)	251
E021	1007	Clock (month, day)	251
E022	1008	Clock (hour, minute)	251
E023	269	Parameter for manufacturer setting. Do not set.	
E080	168	Parameter for manufacturer setting. Do not set.	
E081	169	Parameter for manufacturer setting. Do not set.	
E100	75	Reset selection	252
E101	75	Disconnected PU detection	252
E102	75	PU stop selection	252
E103	145	PU display language selection	254
E104	990	PU buzzer control	254
E105	991	PU contrast adjustment	254
E106	1048	Display-off waiting time	255
E107	75	Reset limit	252
E110	1049	USB host reset	628
E200	161	Frequency setting/key lock operation selection	256
E201	295	Frequency change increment amount setting	257
E300	30	Regenerative function selection	593
E301	570	Multiple rating setting	258
E302	977	Input voltage mode selection	259
E400	77	Parameter write selection	260
E410	296	Password lock level	262
E411	297	Password lock/unlock	262
E420	888	Free parameter 1	264
E421	889	Free parameter 2	264
E430	998	PM parameter initialization Simple	169
E431	999	Automatic parameter setting Simple	264
E440	160	User group read selection Simple	268
E441	172	User group registered display/batch clear	268
E442	173	User group registration	268
E443	174	User group clear	268
E490	989	Parameter copy alarm release	609
E600	72	PWM frequency selection	270
E601	240	Soft-PWM operation selection	270
E602	260	PWM frequency automatic switchover	270
E700	255	Life alarm status display	271
E701	256	Inrush current limit circuit life display	271
E702	257	Control circuit capacitor life display	271
E703	258	Main circuit capacitor life display	271
E704	259	Main circuit capacitor life measuring	271
E710	503	Maintenance timer 1	274
E711	504	Maintenance timer 1 warning output set time	274
E712	686	Maintenance timer 2	274
E713	687	Maintenance timer 2 warning output set time	274
E714	688	Maintenance timer 3	274
E715	689	Maintenance timer 3 warning output set time	274
E720	555	Current average time	275
E721	556	Data output mask time	275
E722	557	Current average value monitor signal output reference current	275

◆ F: Setting of acceleration/deceleration time and acceleration/deceleration pattern

Parameters that set the motor acceleration/deceleration characteristics.

Pr. group	Pr.	Name	Refer to page
F000	20	Acceleration/deceleration reference frequency	278
F001	21	Acceleration/deceleration time increments	278
F002	16	Jog acceleration/deceleration time	318
F003	611	Acceleration time at a restart	511, 517
F010	7	Acceleration time Simple	278
F011	8	Deceleration time Simple	278
F020	44	Second acceleration/deceleration time	278, 503
F021	45	Second deceleration time	278, 503
F022	147	Acceleration/deceleration time switching frequency	278
F030	110	Third acceleration/deceleration time	278
F031	111	Third deceleration time	278
F040	1103	Deceleration time at emergency stop	278
F070	791	Acceleration time in low-speed range	278
F071	792	Deceleration time in low-speed range	278
F100	29	Acceleration/deceleration pattern selection	283
F101	59	Remote function selection	288
F102	13	Starting frequency	291, 292
F103	571	Holding time at a start	291
F200	140	Backlash acceleration stopping frequency	283
F201	141	Backlash acceleration stopping time	283
F202	142	Backlash deceleration stopping frequency	283
F203	143	Backlash deceleration stopping time	283
F300	380	Acceleration S-pattern 1	283
F301	381	Deceleration S-pattern 1	283
F302	382	Acceleration S-pattern 2	283
F303	383	Deceleration S-pattern 2	283
F400	516	S-pattern time at a start of acceleration	283
F401	517	S-pattern time at a completion of acceleration	283
F402	518	S-pattern time at a start of deceleration	283
F403	519	S-pattern time at a completion of deceleration	283
F500	292	Automatic acceleration/deceleration	293, 296, 457
F510	61	Reference current	293, 296
F511	62	Reference value at acceleration	293
F512	63	Reference value at deceleration	293
F513	293	Acceleration/deceleration separate selection	293

上証科技有限公司
購買、維修 此手冊零組件
電話： 07-4665
Email: service@repairtw.com
Line id: @zzzz
www.repairtw.com

Pr. group	Pr.	Name	Refer to page
F520	64	Starting frequency for elevator mode	296

◆ D: Operation command and frequency command

Parameters that specify the inverter's command source, and parameters that set the motor driving frequency and torque.

Pr. group	Pr.	Name	Refer to page
D000	79	Operation mode selection Simple	299, 307
D001	340	Communication startup mode selection	307
D010	338	Communication operation command source	308
D011	339	Communication speed command source	308
D012	550	NET mode operation command source selection	308
D013	551	PU mode operation command source selection	308
D020	78	Reverse rotation prevention selection	314
D030	811	Set resolution switchover	181, 344
D100	291	Pulse train I/O selection	315, 356
D101	384	Input pulse division scaling factor	315
D110	385	Frequency for zero input pulse	315
D111	386	Frequency for maximum input pulse	315
D200	15	Jog frequency	318
D300	28	Multi-speed input compensation selection	319
D301	4	Multi-speed setting (high speed) Simple	319
D302	5	Multi-speed setting (middle speed) Simple	319
D303	6	Multi-speed setting (low speed) Simple	319
D304 to D307	24 to 27	Multi-speed setting (4 speed to 7 speed)	319
D308 to D315	232 to 239	Multi-speed setting (8 speed to 15 speed)	319
D400	804	Torque command source selection	211
D401	805	Torque command value (RAM)	211
D402	806	Torque command value (RAM,EEPROM)	211
D403	1114	Torque command reverse selection	211

◆ H: Protective function parameter

Parameters to protect the motor and the inverter.

Pr. group	Pr.	Name	Refer to page
H000	9	Electronic thermal O/L relay Simple	322, 428, 438
H001	600	First free thermal reduction frequency 1	322
H002	601	First free thermal reduction ratio 1	322
H003	602	First free thermal reduction frequency 2	322
H004	603	First free thermal reduction ratio 2	322
H005	604	First free thermal reduction frequency 3	322
H010	51	Second electronic thermal O/L relay	322, 428, 438
H011	692	Second free thermal reduction frequency 1	322
H012	693	Second free thermal reduction ratio 1	322
H013	694	Second free thermal reduction frequency 2	322
H014	695	Second free thermal reduction ratio 2	322
H015	696	Second free thermal reduction frequency 3	322
H020	561	PTC thermistor protection level	322
H030	875	Fault definition	328
H100	244	Cooling fan operation selection	329
H101	249	Earth (ground) fault detection at start	592
H102	598	Undervoltage level	330
H103	997	Fault initiation	330
H200	251	Output phase loss protection selection	331
H201	872	Input phase loss protection selection	331
H300	65	Retry selection	332
H301	67	Number of retries at fault occurrence	332
H302	68	Retry waiting time	332
H303	69	Retry count display erase	332
H400	1	Maximum frequency Simple	334
H401	2	Minimum frequency Simple	334
H402	18	High speed maximum frequency	334
H410	807	Speed limit selection	213
H411	808	Forward rotation speed limit/speed limit	213
H412	809	Reverse rotation speed limit/reverse-side speed limit	213
H414	1113	Speed limit method selection	213
H415	873 *1	Speed limit	202
H416	285	Speed deviation excess detection frequency	202, 457, 603
H417	853 *1	Speed deviation time	202
H420	31	Frequency jump 1A	335
H421	32	Frequency jump 1B	335
H422	33	Frequency jump 2A	335
H423	34	Frequency jump 2B	335
H424	35	Frequency jump 3A	335
H425	36	Frequency jump 3B	335
H429	552	Frequency jump range	335
H500	22	Stall prevention operation level (Torque limit level)	181, 336
H501	156	Stall prevention operation selection	336
H600	48	Second stall prevention operation level	336
H601	49	Second stall prevention operation frequency	336
H602	114	Third stall prevention operation level	336
H603	115	Third stall prevention operation frequency	336
H610	23	Stall prevention operation level compensation factor at double speed	336
H611	66	Stall prevention operation reduction starting frequency	336
H620	148	Stall prevention level at 0 V input	336
H621	149	Stall prevention level at 10 V input	336
H631	154	Voltage reduction selection during stall prevention operation	336
H700	810	Torque limit input method selection	181
H701	812	Torque limit level (regeneration)	181
H702	813	Torque limit level (3rd quadrant)	181
H703	814	Torque limit level (4th quadrant)	181
H710	815	Torque limit level 2	181
H720	816	Torque limit level during acceleration	181
H721	817	Torque limit level during deceleration	181
H730	874	OLT level setting	181

上正科技有限公司
購買、維修 此手冊參照作
電話： 037-466333
Email: service@repairtw.com
Line id: @zzzz
www.repairtw.com

Pr. group	Pr.	Name	Refer to page
H800	374	Overspeed detection level	342
H881	690	Deceleration check time	203

◆ M: Monitor display and monitor output signal

Parameters regarding the inverter's operating status. These parameters are used to set the monitors and output signals.

Pr. group	Pr.	Name	Refer to page
M000	37	Speed display	344
M001	505	Speed setting reference	344
M002	144	Speed setting switchover	344
M020	170	Watt-hour meter clear	346
M021	563	Energization time carrying-over times	346
M022	268	Monitor decimal digits selection	346
M023	891	Cumulative power monitor digit shifted times	346, 365
M030	171	Operation hour meter clear	346
M031	564	Operating time carrying-over times	346
M040	55	Frequency monitoring reference	356
M041	56	Current monitoring reference	356
M042	866	Torque monitoring reference	356
M043	241	Analog input display unit switchover	400
M044	290	Monitor negative output selection	346, 356
M050	1106	Torque monitor filter	346
M051	1107	Running speed monitor filter	346
M052	1108	Excitation current monitor filter	346
M060	663	Control circuit temperature signal output level	389
M100	52	Operation panel main monitor selection	346
M101	774	Operation panel monitor selection 1	346
M102	775	Operation panel monitor selection 2	346
M103	776	Operation panel monitor selection 3	346
M104	992	Operation panel setting dial push monitor selection	346
M200	892	Load factor	365
M201	893	Energy saving monitor reference (motor capacity)	365
M202	894	Control selection during commercial power-supply operation	365
M203	895	Power saving rate reference value	365
M204	896	Power unit cost	365
M205	897	Power saving monitor average time	365
M206	898	Power saving cumulative monitor clear	365
M207	899	Operation time rate (estimated value)	365
M300	54	FM/CA terminal function selection	356
M301	158	AM terminal function selection	356
M310	C0 (900) *2	FM/CA terminal calibration	361
M320	C1 (901) *2	AM terminal calibration	361
M321	867	AM output filter	361
M330	C8 (930) *2	Current output bias signal	361
M331	C9 (930) *2	Current output bias current	361
M332	C10 (931) *2	Current output gain signal	361
M333	C11 (931) *2	Current output gain current	361
M334	869	Current output filter	361
M400	190	RUN terminal function selection	370
M401	191	SU terminal function selection	370
M402	192	IPF terminal function selection	370
M403	193	OL terminal function selection	370
M404	194	FU terminal function selection	370
M405	195	ABC1 terminal function selection	370
M406	196	ABC2 terminal function selection	370
M430	157	OL signal output timer	181, 336
M431	289	Inverter output terminal filter	370
M433	166	Output current detection signal retention time	381
M440	870	Speed detection hysteresis	378
M441	41	Up-to-frequency sensitivity	378
M442	42	Output frequency detection	378
M443	43	Output frequency detection for reverse rotation	378
M444	50	Second output frequency detection	378
M445	116	Third output frequency detection	378
M446	865	Low speed detection	378
M460	150	Output current detection level	381
M461	151	Output current detection signal delay time	381
M462	152	Zero current detection level	381
M463	153	Zero current detection time	381
M464	167	Output current detection operation selection	381
M470	864	Torque detection	383
M500	495	Remote output selection	384
M501	496	Remote output data 1	384
M502	497	Remote output data 2	384
M510	76	Fault code output selection	387
M520	799	Pulse increment setting for output power	388
M530	655	Analog remote output selection	385
M531	656	Analog remote output 1	385
M532	657	Analog remote output 2	385
M533	658	Analog remote output 3	385
M534	659	Analog remote output 4	385

◆ T: Multi-function input terminal parameters

Parameters for the input terminals where inverter commands are received through.

Pr. group	Pr.	Name	Refer to page
T000	73	Analog input selection	391, 396
T001	267	Terminal 4 input selection	391
T002	74	Input filter time constant	398
T003	822	Speed setting filter 1	398
T004	826	Torque setting filter 1	398
T005	832	Speed setting filter 2	398
T006	836	Torque setting filter 2	398
T007	849	Analog input offset adjustment	398
T010	868	Terminal 1 function assignment	181, 336, 395
T021	242	Terminal 1 added compensation amount (terminal 2)	396

上正科技有限公司
購買、維修此手機專線
電話：037-466222
email: service@repairtw.com
Line Id: @zzz
www.repairtw.com

Pr. group	Pr.	Name	Refer to page
T022	125	Terminal 2 frequency setting gain frequency Simple	400
T040	858	Terminal 4 function assignment	181, 336, 395
T041	243	Terminal 1 added compensation amount (terminal 4)	396
T042	126	Terminal 4 frequency setting gain frequency Simple	400
T050	252	Override bias	396
T051	253	Override gain	396
T052	573	4 mA input check selection	412
T053	777	4 mA input fault operation frequency	412
T054	778	Current input check filter	412
T100	C12 (917) *2	Terminal 1 bias frequency (speed)	400
T101	C13 (917) *2	Terminal 1 bias (speed)	400
T102	C14 (918) *2	Terminal 1 gain frequency (speed)	400
T103	C15 (918) *2	Terminal 1 gain (speed)	400
T110	C16 (919) *2	Terminal 1 bias command (torque/ magnetic flux)	406
T111	C17 (919) *2	Terminal 1 bias (torque/magnetic flux)	406
T112	C18 (920) *2	Terminal 1 gain command (torque/ magnetic flux)	406
T113	C19 (920) *2	Terminal 1 gain (torque/magnetic flux)	406
T200	C2 (902) *2	Terminal 2 frequency setting bias frequency	400
T201	C3 (902) *2	Terminal 2 frequency setting bias	400
T202	125 (903) *2	Terminal 2 frequency setting gain frequency	400
T203	C4 (903) *2	Terminal 2 frequency setting gain	400
T400	C5 (904) *2	Terminal 4 frequency setting bias frequency	400
T401	C6 (904) *2	Terminal 4 frequency setting bias	400
T402	126 (905) *2	Terminal 4 frequency setting gain frequency	400
T403	C7 (905) *2	Terminal 4 frequency setting gain	400
T410	C38 (932) *2	Terminal 4 bias command (torque/ magnetic flux)	406
T411	C39 (932) *2	Terminal 4 bias (torque/magnetic flux)	406
T412	C40 (933) *2	Terminal 4 gain command (torque/ magnetic flux)	406
T413	C41 (933) *2	Terminal 4 gain (torque/magnetic flux)	406
T700	178	STF terminal function selection	416
T701	179	STR terminal function selection	416
T702	180	RL terminal function selection	416
T703	181	RM terminal function selection	416
T704	182	RH terminal function selection	416
T705	183	RT terminal function selection	416
T706	184	AU terminal function selection	416
T707	185	JOG terminal function selection	416
T708	186	CS terminal function selection	416
T709	187	MRS terminal function selection	416
T710	188	STOP terminal function selection	416
T711	189	RES terminal function selection	416
T720	17	MRS input selection	419
T721	599	X10 terminal input selection	593
T730	155	RT signal function validity condition selection	420
T740	699	Input terminal filter	416

◆ C: Motor constant parameters

Parameters for the applied motor setting.

Pr. group	Pr.	Name	Refer to page
C000	684	Tuning data unit switchover	428, 438
C100	71	Applied motor	424, 428, 438
C101	80	Motor capacity	160, 428, 438
C102	81	Number of motor poles	160, 428, 438
C103	9	Rated motor current Simple	322, 428, 438
C104	83	Rated motor voltage	160, 428, 438
C105	84	Rated motor frequency	160, 428, 438
C106	702	Maximum motor frequency	438
C106	706	Induced voltage constant (phi f)	438
C107	707	Motor inertia (integer)	438
C108	724	Motor inertia (exponent)	438
C110	96	Auto tuning setting/status	428, 438
C111	95	Online auto tuning selection	445
C112	818	Easy gain tuning response level setting	188
C113	819	Easy gain tuning selection	188

上正科技有限公司
購買、維修 此手冊零組件
電話： 037-466333
Email: service@repairtw.com
Line id: @zzzz
www.repairtw.com

Pr. group	Pr.	Name	Refer to page
C114	880	Load inertia ratio	188, 196, 245
C120	90	Motor constant (R1)	428, 438
C121	91	Motor constant (R2)	428
C122	92	Motor constant (L1)/d-shaft inductance (Ld)	428, 438
C123	93	Motor constant (L2)/q-shaft inductance (Lq)	428, 438
C124	94	Motor constant (X)	428
C125	82	Motor excitation current	428
C126	859	Torque current/Rated PM motor current	428, 438
C131	711	Motor Ld decay ratio	438
C132	712	Motor Lq decay ratio	438
C133	725	Motor protection current level	438
C140	369 *1	Number of encoder pulses	68, 471, 603
C141	359 *1	Encoder rotation direction	68, 471, 603
C148	376 *1	Encoder signal loss detection enable/ disable selection	448
C150	1002	Lq tuning target current adjustment coefficient	438
C182	717	Starting resistance tuning compensation	438
C185	721	Starting magnetic pole position detection pulse width	438
C200	450	Second applied motor	424
C201	453	Second motor capacity	428, 438
C202	454	Number of second motor poles	428, 438
C203	51	Rated second motor current	322, 428, 438
C204	456	Rated second motor voltage	428, 438
C205	457	Rated second motor frequency	428, 438
C206	743	Second motor maximum frequency	438
C207	744	Second motor inertia (integer)	438
C208	745	Second motor inertia (exponent)	438
C210	463	Second motor auto tuning setting/ status	428, 438
C211	574	Second motor online auto tuning	445
C220	458	Second motor constant (R1)	428, 438
C221	459	Second motor constant (R2)	428
C222	460	Second motor constant (L1) / d-shaft inductance (Ld)	428, 438
C223	461	Second motor constant (L2) / q-shaft inductance (Lq)	428, 438
C224	462	Second motor constant (X)	428
C225	455	Second motor excitation current	428
C226	860	Second motor torque current/Rated PM motor current	428, 438
C230	738	Second motor induced voltage constant (phi f)	438
C231	739	Second motor Ld decay ratio	438
C232	740	Second motor Lq decay ratio	438
C233	746	Second motor protection current level	438
C282	741	Second starting resistance tuning compensation	438
C285	742	Second motor magnetic pole detection pulse width	438

◆ A: Application parameters

Parameters to set a specific application.

Pr. group	Pr.	Name	Refer to page
A000	135	Electronic bypass sequence selection	450
A001	136	MC switchover interlock time	450
A002	137	Start waiting time	450
A003	138	Bypass selection at a fault	450
A004	139	Automatic switchover frequency from inverter to bypass operation	450
A005	159	Automatic switchover frequency range from bypass to inverter operation	450
A006	248	Self power management selection	455
A007	254	Main circuit power OFF waiting time	455
A100	278	Brake opening frequency	457
A101	279	Brake opening current	457
A102	280	Brake opening current detection time	457
A103	281	Brake operation time at start	457
A104	282	Brake operation frequency	457
A105	283	Brake operation time at stop	457
A106	284	Deceleration detection function selection	457
A107	285	Overspeed detection frequency	202, 457, 603
A108	639	Brake opening current selection	457
A109	640	Brake operation frequency selection	457
A110	292	Automatic acceleration/deceleration	293, 296, 457
A120	642	Second brake opening frequency	457
A121	643	Second brake opening current	457
A122	644	Second brake opening current detection time	457
A123	645	Second brake operation time at start	457
A124	646	Second brake operation frequency	457
A125	647	Second brake operation time at stop	457
A126	648	Second deceleration detection function selection	457
A128	650	Second brake opening current selection	457
A129	651	Second brake operation frequency selection	457
A130	641	Second brake sequence operation selection	457
A200	270	Stop-on contact/load torque high-speed frequency control selection	462, 465
A201	271	High-speed setting maximum current	465
A202	272	Middle-speed setting minimum current	465
A203	273	Current averaging range	465
A204	274	Current averaging filter time constant	465
A205	275	Stop-on contact excitation current low-speed multiplying factor	462
A206	276	PWM carrier frequency at stop-on contact	462
A300	592	Traverse function selection	467
A301	593	Maximum amplitude amount	467
A302	594	Amplitude compensation amount during deceleration	467
A303	595	Amplitude compensation amount during acceleration	467
A304	596	Amplitude acceleration time	467
A305	597	Amplitude deceleration time	467
A310	1072	DC brake judgment time for vibration control operation	469

上正科技有限公司
購買、維修 此手冊零組件
電話： 07-466333
Email: service@repairtw.com
Line id: @zzz
www.repairtw.com

Pr. group	Pr.	Name	Refer to page
A311	1073	Vibration control operation selection	469
A312	1074	Vibration suppression frequency	469
A313	1075	Vibration suppression depth	469
A314	1076	Vibration suppression width	469
A315	1077	Rope length	469
A316	1078	Trolley weight	469
A317	1079	Load weight	469
A510	350 *1	Stop position command selection	471
A511	360 *1	16-bit data selection	471
A512	361 *1	Position shift	471
A520	362 *1	Orientation position loop gain	471
A521	363 *1	Completion signal output delay time	471
A522	364 *1	Encoder stop check time	471
A523	365 *1	Orientation limit	471
A524	366 *1	Recheck time	471
A525	393 *1	Orientation selection	471
A526	351 *1	Orientation speed	471
A527	352 *1	Creep speed	471
A528	353 *1	Creep switchover position	471
A529	354 *1	Position loop switchover position	471
A530	355 *1	DC injection brake start position	471
A531	356 *1	Internal stop position command	471
A532	357 *1	Orientation in-position zone	471
A533	358 *1	Servo torque selection	471
A542	396 *1	Orientation speed gain (P term)	471
A543	397 *1	Orientation speed integral time	471
A544	398 *1	Orientation speed gain (D term)	471
A545	399 *1	Orientation deceleration ratio	471
A600	759	PID unit selection	496
A601	131	PID upper limit	483, 503
A602	132	PID lower limit	483, 503
A603	553	PID deviation limit	483
A604	554	PID signal operation selection	483
A605	1134	PID upper limit manipulated value	503
A606	1135	PID lower limit manipulated value	503
A610	128	PID action selection	483, 503
A611	133	PID action set point	483, 503
A612	127	PID control automatic switchover frequency	483
A613	129	PID proportional band	483, 503
A614	130	PID integral time	483, 503
A615	134	PID differential time	483, 503
A616	760	Pre-charge fault selection	499
A617	761	Pre-charge ending level	499
A618	762	Pre-charge ending time	499
A619	763	Pre-charge upper detection level	499
A620	764	Pre-charge time limit	499
A621	575	Output interruption detection time	483
A622	576	Output interruption detection level	483
A623	577	Output interruption cancel level	483
A624	609	PID set point/deviation input selection	483, 503
A625	610	PID measured value input selection	483, 503
A630	C42 (934) *2	PID display bias coefficient	496
A631	C43 (934) *2	PID display bias analog value	496
A632	C44 (935) *2	PID display gain coefficient	496
A633	C45 (935) *2	PID display gain analog value	496
A640	1142	Second PID unit selection	483
A641	1143	Second PID upper limit	483
A642	1144	Second PID lower limit	483
A643	1145	Second PID deviation limit	483
A644	1146	Second PID signal operation selection	483
A650	753	Second PID action selection	483
A651	755	Second PID action set point	483
A652	754	Second PID control automatic switchover frequency	483
A653	756	Second PID proportional band	483
A654	757	Second PID integral time	483
A655	758	Second PID differential time	483
A656	765	Second pre-charge fault selection	499
A657	766	Second pre-charge ending level	499
A658	767	Second pre-charge ending time	499
A659	768	Second pre-charge upper detection level	499
A660	769	Second pre-charge time limit	499
A661	1147	Second output interruption detection time	483
A662	1148	Second output interruption detection level	483
A663	1149	Second output interruption cancel level	483
A664	1140	Second PID set point/deviation input selection	483
A665	1141	Second PID measured value input selection	483
A670	1136	Second PID display bias coefficient	496
A671	1137	Second PID display bias analog value	496
A672	1138	Second PID display gain coefficient	496
A673	1139	Second PID display gain analog value	496
A680	573	4 mA input check selection	412
A681	777	4 mA input fault operation frequency	412
A682	778	Current input check filter	412
A700	162	Automatic restart after instantaneous power failure selection	511, 517
A701	299	Rotation direction detection selection at restarting	511
A702	57	Restart coasting time	511, 517
A703	58	Restart cushion time	511
A704	163	First cushion time for restart	511
A705	164	First cushion voltage for restart	511
A710	165	Stall prevention operation level for restart	511
A711	298	Frequency search gain	511
A712	560	Second frequency search gain	511
A730	261	Power failure stop selection	523

上正科技有限公司
購買、維修 此為參考圖片
電話：037-466333
Email: service@repairtw.com
Line id: @zzz
www.repairtw.com

Pr. group	Pr.	Name	Refer to page
A731	262	Subtracted frequency at deceleration start	523
A732	263	Subtraction starting frequency	523
A733	264	Power-failure deceleration time 1	523
A734	265	Power-failure deceleration time 2	523
A735	266	Power failure deceleration time switchover frequency	523
A785	294	UV avoidance voltage gain	523
A786	668	Power failure stop frequency gain	523
A800	414	PLC function operation selection	527
A801	415	Inverter operation lock mode setting	527
A802	416	Pre-scale function selection	527
A803	417	Pre-scale setting value	527
A804	498	PLC function flash memory clear	527
A810 to A859	1150 to 1199	PLC function user parameters 1 to 50	527
A900	1020	Trace operation selection	529
A901	1021	Trace mode selection	529
A902	1022	Sampling cycle	529
A903	1023	Number of analog channels	529
A904	1024	Sampling auto start	529
A905	1025	Trigger mode selection	529
A906	1026	Number of sampling before trigger	529
A910	1027	Analog source selection (1ch)	529
A911	1028	Analog source selection (2ch)	529
A912	1029	Analog source selection (3ch)	529
A913	1030	Analog source selection (4ch)	529
A914	1031	Analog source selection (5ch)	529
A915	1032	Analog source selection (6ch)	529
A916	1033	Analog source selection (7ch)	529
A917	1034	Analog source selection (8ch)	529
A918	1035	Analog trigger channel	529
A919	1036	Analog trigger operation selection	529
A920	1037	Analog trigger level	529
A930	1038	Digital source selection (1ch)	529
A931	1039	Digital source selection (2ch)	529
A932	1040	Digital source selection (3ch)	529
A933	1041	Digital source selection (4ch)	529
A934	1042	Digital source selection (5ch)	529
A935	1043	Digital source selection (6ch)	529
A936	1044	Digital source selection (7ch)	529
A937	1045	Digital source selection (8ch)	529
A938	1046	Digital trigger channel	529
A939	1047	Digital trigger operation selection	529

◆ B: Position control parameters

Parameters for the position control setting.

Pr. group	Pr.	Name	Refer to page
B000	419	Position command source selection	227, 239
B001	420	Command pulse scaling factor numerator (electronic gear numerator)	242
B002	421	Command pulse multiplication denominator (electronic gear denominator)	242
B003	422	Position control gain	245
B004	423	Position feed forward gain	245
B005	424	Position command acceleration/ deceleration time constant	242
B006	425	Position feed forward command filter	245
B007	426	In-position width	244
B008	427	Excessive level error	244
B009	428	Command pulse selection	239
B010	429	Clear signal selection	239
B011	430	Pulse monitor selection	239
B012	446	Model position control gain	245
B020	464	Digital position control sudden stop deceleration time	227
B021	465	First target position lower 4 digits	227
B022	466	First target position upper 4 digits	227
B023	467	Second target position lower 4 digits	227
B024	468	Second target position upper 4 digits	227
B025	469	Third target position lower 4 digits	227
B026	470	Third target position upper 4 digits	227
B027	471	Fourth target position lower 4 digits	227
B028	472	Fourth target position upper 4 digits	227
B029	473	Fifth target position lower 4 digits	227
B030	474	Fifth target position upper 4 digits	227
B031	475	Sixth target position lower 4 digits	227
B032	476	Sixth target position upper 4 digits	227
B033	477	Seventh target position lower 4 digits	227
B034	478	Seventh target position upper 4 digits	227
B035	479	Eighth target position lower 4 digits	227
B036	480	Eighth target position upper 4 digits	227
B037	481	Ninth target position lower 4 digits	227
B038	482	Ninth target position upper 4 digits	227
B039	483	Tenth target position lower 4 digits	227
B040	484	Tenth target position upper 4 digits	227
B041	485	Eleventh target position lower 4 digits	227
B042	486	Eleventh target position upper 4 digits	227
B043	487	Twelfth target position lower 4 digits	227
B044	488	Twelfth target position upper 4 digits	227
B045	489	Thirteenth target position lower 4 digits	227
B046	490	Thirteenth target position upper 4 digits	227
B047	491	Fourteenth target position lower 4 digits	227
B048	492	Fourteenth target position upper 4 digits	227
B049	493	Fifteenth target position lower 4 digits	227
B050	494	Fifteenth target position upper 4 digits	227
B100	1220	Target position/speed selection	710
B101	1221	Start command edge detection selection	227
B120	1222	First positioning acceleration time	227
B121	1223	First positioning deceleration time	227
B122	1224	First positioning dwell time	227
B123	1225	First positioning sub-function	227
B124	1226	Second positioning acceleration time	227
B125	1227	Second positioning deceleration time	227
B126	1228	Second positioning dwell time	227
B127	1229	Second positioning sub-function	227
B128	1230	Third positioning acceleration time	227
B129	1231	Third positioning deceleration time	227
B130	1232	Third positioning dwell time	227
B131	1233	Third positioning sub-function	227
B132	1234	Fourth positioning acceleration time	227

上正科技有限公司
購買、維修此手冊零組件
電話： 037-466333
Email: service@repairtw.com
Line id: @zzz
www.repairtw.com

Pr. group	Pr.	Name	Refer to page
B133	1235	Fourth positioning deceleration time	227
B134	1236	Fourth positioning dwell time	227
B135	1237	Fourth positioning sub-function	227
B136	1238	Fifth positioning acceleration time	227
B137	1239	Fifth positioning deceleration time	227
B138	1240	Fifth positioning dwell time	227
B139	1241	Fifth positioning sub-function	227
B140	1242	Sixth positioning acceleration time	227
B141	1243	Sixth positioning deceleration time	227
B142	1244	Sixth positioning dwell time	227
B143	1245	Sixth positioning sub-function	227
B144	1246	Seventh positioning acceleration time	227
B145	1247	Seventh positioning deceleration time	227
B146	1248	Seventh positioning dwell time	227
B147	1249	Seventh positioning sub-function	227
B148	1250	Eighth positioning acceleration time	227
B149	1251	Eighth positioning deceleration time	227
B150	1252	Eighth positioning dwell time	227
B151	1253	Eighth positioning sub-function	227
B152	1254	Ninth positioning acceleration time	227
B153	1255	Ninth positioning deceleration time	227
B154	1256	Ninth positioning dwell time	227
B155	1257	Ninth positioning sub-function	227
B156	1258	Tenth positioning acceleration time	227
B157	1259	Tenth positioning deceleration time	227
B158	1260	Tenth positioning dwell time	227
B159	1261	Tenth positioning sub-function	227
B160	1262	Eleventh positioning acceleration time	227
B161	1263	Eleventh positioning deceleration time	227
B162	1264	Eleventh positioning dwell time	227
B163	1265	Eleventh positioning sub-function	227
B164	1266	Twelfth positioning acceleration time	227
B165	1267	Twelfth positioning deceleration time	227
B166	1268	Twelfth positioning dwell time	227
B167	1269	Twelfth positioning sub-function	227
B168	1270	Thirteenth positioning acceleration time	227
B169	1271	Thirteenth positioning deceleration time	227
B170	1272	Thirteenth positioning dwell time	227
B171	1273	Thirteenth positioning sub-function	227
B172	1274	Fourteenth positioning acceleration time	227
B173	1275	Fourteenth positioning deceleration time	227
B174	1276	Fourteenth positioning dwell time	227
B175	1277	Fourteenth positioning sub-function	227
B176	1278	Fifteenth positioning acceleration time	227
B177	1279	Fifteenth positioning deceleration time	227
B178	1280	Fifteenth positioning dwell time	227
B179	1281	Fifteenth positioning sub-function	227
B180	1282	Home position return method selection	227
B181	1283	Home position return speed	227
B182	1284	Home position return creep speed	227
B183	1285	Home position shift amount lower 4 digits	227
B184	1286	Home position shift amount upper 4 digits	227
B185	1287	Travel distance after proximity dog ON lower 4 digits	227
B186	1288	Travel distance after proximity dog ON upper 4 digits	227
B187	1289	Home position return stopper torque	227
B188	1290	Home position return stopper waiting time	227
B190	1292	Position control terminal input selection	227
B191	1293	Roll feeding mode selection	227
B192	1294	Position detection lower 4 digits	244
B193	1295	Position detection upper 4 digits	244
B194	1296	Position detection selection	244
B195	1297	Position detection hysteresis width	244

◆ N: Operation via communication and its settings

Parameters for communication operation. These parameters set the communication specifications and operation.

Pr. group	Pr.	Name	Refer to page
N000	549	Protocol selection	541
N001	342	Communication EEPROM write selection	541
N002	539	Modbus-RTU communication check time interval	560
N013	502	Stop mode selection at communication error	541
N014	779	Operation frequency during communication error	541
N020	117	PU communication station number	544
N021	118	PU communication speed	544
N022	119	PU communication data length	544
N023	119	PU communication stop bit length	544
N024	120	PU communication parity check	544
N025	121	Number of PU communication retries	544
N026	122	PU communication check time interval	544
N027	123	PU communication waiting time setting	544
N028	124	PU communication CR/LF selection	544
N030	331	RS-485 communication station number	544
N031	332	RS-485 communication speed	544
N032	333	PU communication data length	544
N033	333	PU communication stop bit length	544
N034	334	RS-485 communication parity check selection	544
N035	335	RS-485 communication retry count	544
N036	336	RS-485 communication check time interval	544
N037	337	RS-485 communication waiting time setting	544
N038	341	RS-485 communication CR/LF selection	544
N040	547	USB communication station number	574
N041	548	USB communication check time interval	574
N080	343	Communication error count	560
N500 to N543, N550 to N559	1300 to 1343, 1350 to 1359	Communication option parameters. For details, refer to the Instruction Manual of the option.	

上品科技有限公司
購買、維修 此手冊零組件
電話：037-466333
Email: service@repairtw.com
Line id: @zzzz
www.repairtw.com

◆ G: Control Parameter

Parameters for motor control.

Pr. group	Pr.	Name	Refer to page
G000	0	Torque boost Simple	577
G001	3	Base frequency Simple	578
G002	19	Base frequency voltage	578
G003	14	Load pattern selection	580
G010	46	Second torque boost	577
G011	47	Second V/F (base frequency)	578
G020	112	Third torque boost	577
G021	113	Third V/F (base frequency)	578
G030	60	Energy saving control selection	582
G040	100	V/F1(first frequency)	583
G041	101	V/F1(first frequency voltage)	583
G042	102	V/F2(second frequency)	583
G043	103	V/F2(second frequency voltage)	583
G044	104	V/F3(third frequency)	583
G045	105	V/F3(third frequency voltage)	583
G046	106	V/F4(fourth frequency)	583
G047	107	V/F4(fourth frequency voltage)	583
G048	108	V/F5(fifth frequency)	583
G049	109	V/F5(fifth frequency voltage)	583
G100	10	DC injection brake operation frequency	584
G101	11	DC injection brake operation time	584
G102	802	Pre-excitation selection	584
G103	850	Brake operation selection	590
G105	522	Output stop frequency	590
G106	250	Stop selection	592
G107	70	Special regenerative brake duty	593
G110	12	DC injection brake operation voltage	584
G120	882	Regeneration avoidance operation selection	599
G121	883	Regeneration avoidance operation level	599
G122	884	Regeneration avoidance at deceleration detection sensitivity	599
G123	885	Regeneration avoidance compensation frequency limit value	599
G124	886	Regeneration avoidance voltage gain	599
G125	665	Regeneration avoidance frequency gain	599
G130	660	Increased magnetic excitation deceleration operation selection	601
G131	661	Magnetic excitation increase rate	601
G132	662	Increased magnetic excitation current level	601
G200	800	Control method selection	160
G203	245	Rated slip	602
G204	246	Slip compensation time constant	602
G205	247	Constant-power range slip compensation selection	602
G206	1116	Constant output range speed control P gain compensation	188
G210	803	Constant power range torque characteristic selection	181, 211
G211	820	Speed control P gain 1	188
G212	821	Speed control integral time 1	188
G213	824	Torque control P gain 1 (current loop proportional gain)	219
G214	825	Torque control integral time 1 (current loop integral time)	219
G215	823 *1	Speed detection filter 1	248
G216	827	Torque detection filter 1	248
G217	854	Excitation ratio	249
G218	1115	Speed control integral term clear time	188
G220	877	Speed feed forward control/model adaptive speed control selection	196, 245
G221	878	Speed feed forward filter	196
G222	879	Speed feed forward torque limit	196
G223	881	Speed feed forward gain	196
G224	828	Model speed control gain	196, 245
G230	840 *1	Torque bias selection	198
G231	841 *1	Torque bias 1	198
G232	842 *1	Torque bias 2	198
G233	843 *1	Torque bias 3	198
G234	844 *1	Torque bias filter	198
G235	845 *1	Torque bias operation time	198
G236	846 *1	Torque bias balance compensation	198
G237	847 *1	Fall-time torque bias terminal 1 bias	198
G238	848 *1	Fall-time torque bias terminal 1 gain	198
G240	367 *1	Speed feedback range	603
G241	368 *1	Feedback gain	603
G250	788	Low speed range torque characteristic selection	173
G260	1121	Per-unit speed control reference frequency	188
G261	1117	Speed control P gain 1 (per-unit system)	188
G262	1119	Model speed control gain (per-unit system)	196
G300	451	Second motor control method selection	160
G311	830	Speed control P gain 2	188
G312	831	Speed control integral time 2	188
G313	834	Torque control P gain 2	219
G314	835	Torque control integral time 2	219
G315	833 *1	Speed detection filter 2	248
G316	837	Torque detection filter 2	248
G350	747	Second motor low-speed range torque characteristics	173
G361	1118	Speed control P gain 2 (per-unit system)	188
G400	286	Droop gain	605
G401	287	Droop filter time constant	605
G402	288	Droop function activation selection	605
G403	994	Droop break point gain	605
G404	995	Droop break point torque	605
G410	653	Speed smoothing control	607
G411	654	Speed smoothing cutoff frequency	607
G601	1003	Notch filter frequency	204
G602	1004	Notch filter depth	204
G603	1005	Notch filter width	204
G932	89	Speed control gain (Advanced magnetic flux vector)	167
G942	569	Second motor speed control gain	167

*1 Setting can be made only when the FR-A8AP is mounted.
*2 The parameter number in parentheses is the one for use with the parameter unit (FR-PU07).

正正科技有限公司
購買、維修 此手冊專家
電話： 037-466333
Email: service@repairtw.com
Line id: @zzzz
www.repairtw.com

5.2 Control method

V/F control (initial setting), Advanced magnetic flux vector control, Real sensorless vector control, vector control, and PM sensorless vector control are available with this inverter.

(1) V/F control

- It controls the frequency and voltage so that the ratio of frequency (F) to voltage (V) is constant while changing the frequency.

(2) Advanced magnetic flux vector control

- This control performs vector calculation and divide the inverter's output current into an excitation current and into a torque current. The frequency and the voltage are then compensated to flow the motor current that meets the load torque. This control methods improves the torque generation at a low speed. The output frequency is further compensated (slip compensation) to bring the actual motor speed closer to the commanded speed. This function is useful when the load fluctuates are severe.

POINT

Advanced magnetic flux vector control requires the following conditions.
If the conditions are not satisfied, select V/F control. Otherwise, malfunctions such as insufficient torque, uneven rotation may occur.

- For the motor capacity, the rated motor current should be equal to or less than the rated inverter current. (It must be 0.4 kW or higher.)
  Using a motor with the rated current substantially lower than the rated inverter current will cause torque ripples, etc. and degrade the speed and torque accuracies. As a reference, select the motor with the rated motor current that is about 40% or higher of the rated inverter current.
- The motor described in the table below is used.

Motor	Condition
Mitsubishi standard motor (SF-JR)	Offline auto tuning is not required
Mitsubishi high-efficiency motor (SF-HR)	
Mitsubishi constant-torque motor (SF-JRCA 4P, SF-HRCA)	
Mitsubishi high-performance energy-saving motor (SF-PR)	
Other motors (other manufacturers, SF-TH, etc.)	Offline auto tuning is required

上正科技有限公司
購買、維修 此手冊零組件
電話： 037-466333
Email: service@repairtw.com
Line id: @zzzz
www.repairtw.com

- Single-motor operation (one motor to one inverter) is preformed.
- The wiring length from inverter to motor is 30 m or less. (When the wiring length exceeds 30 m, perform offline auto tuning in a wired state.)
- A sine wave filter (MT-BSL/BSC) is not used.

(3) Real sensorless vector control

- The motor speed estimation enables the speed control and the torque control to control currents more accurately. When a high-accuracy, fast-response control is needed, select Real sensorless vector control, and perform offline auto tuning.
- This control method can be applied for the following purposes:
  - To minimize the speed fluctuation even at a severe load fluctuation
  - To generate a low speed torque
  - To prevent machine from damage due to a too large torque (torque limit)
  - To perform the torque control

POINT

The Real sensorless vector control requires the following conditions.
If the conditions are not satisfied, select V/F control. Otherwise, malfunctions such as insufficient torque, uneven rotation may occur.

- For the motor capacity, the rated motor current should be equal to or less than the rated inverter current. (It must be 0.4 kW or higher.)
  Using a motor with the rated current substantially lower than the rated inverter current will cause torque ripples, etc. and degrade the speed and torque accuracies. As a reference, select the motor with the rated motor current that is about 40% or higher of the rated inverter current.
- Offline auto tuning is performed.
  Offline auto tuning is necessary under Real sensorless vector control even when the Mitsubishi motor is used.
- Single-motor operation (one motor to one inverter) is preformed.
- A surge voltage suppression filter (FR-ASF/FR-BMF) or sine wave filter (MT-BSL/BSC) is not used.

(4) Vector control

- When FR-A8AP is mounted, full-scale vector control operation can be performed using a motor with encoder. Fast response/high accuracy speed control (zero speed control, servo lock), torque control, and position control can be performed.
- What is vector control?
  Vector control has excellent control characteristic compared to V/F control and other controls. The control characteristic of the vector control is equal to those of DC machines.
  This control method can be applied for the following purposes:
  - To minimize the speed fluctuation even at a severe load fluctuation
  - To generate a low speed torque
  - To prevent machine from damage due to a too large torque (torque limit)
  - To perform torque control or position control
  - To control the torque at a servo-lock status (motor shaft stopped status)

上正科技有限公司
購買 維修 此手冊零組件
電話： 037-466333
Email: service@repairtw.com
Line Id: @222z
www.repairtw.com

POINT

Vector control requires the following conditions.
When the conditions are not satisfied, malfunctions such as insufficient torque, uneven rotation may occur.

- For the motor capacity, the rated motor current should be equal to or less than the rated inverter current. (It must be 0.4 kW or higher.)
  Using a motor with the rated current substantially lower than the rated inverter current will cause torque ripples, etc. and degrade the speed and torque accuracies. As a reference, select the motor with the rated motor current that is about 40% or higher of the rated inverter current.
- The motor described in the table below is used.

Motor	Condition
Vector control dedicated motor (SF-V5RU 1500 r/min series)	Offline auto tuning is not required
Mitsubishi standard motor with encoder (SF-JR)	
Mitsubishi high-efficiency motor with encoder (SF-HR)	
Mitsubishi constant-torque motor with encoder (SF-JRCA 4P, SF-HRCA)	
Other motors (motors other than SF-V5RU 1500 r/min series, other manufactures' motors, etc.)	Offline auto tuning is required

- Single-motor operation (one motor to one inverter) is preformed.
- The wiring length from inverter to motor is 30 m or less. (When the wiring length exceeds 30 m, perform offline auto tuning in a wired state.)
- A surge voltage suppression filter (FR-ASF/FR-BMF) or sine wave filter (MT-BSL/BSC) is not used.

(5) PM sensorless vector control

- Highly efficient motor control and highly accurate motor speed control can be performed by using the inverter with a PM (permanent magnet embedded) motor, which is more efficient than an induction motor.
- The motor speed is calculated based on the output voltage and current from the inverter. It does not require a speed detector such as an encoder. The inverter drives the PM motor with the least required current when a load is applied in order to achieve the highest motor efficiency.
- Performing the IPM parameter initialization makes the IPM motor MM-CF ready for the PM sensorless vector control.

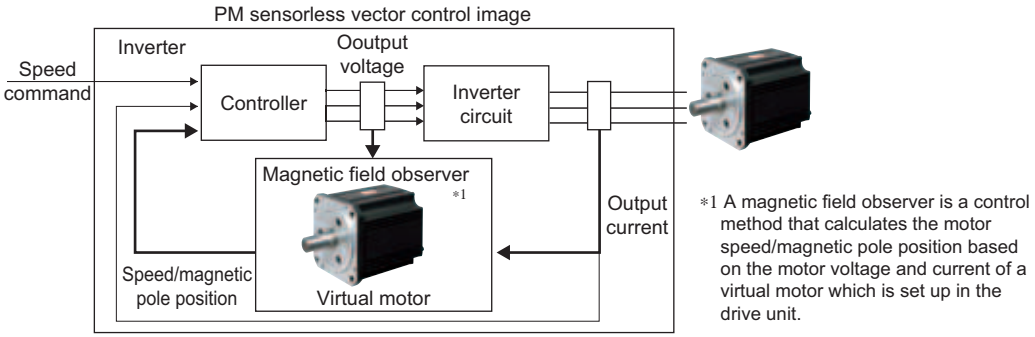

*1 A magnetic field observer is a control method that calculates the motor speed/magnetic pole position based on the motor voltage and current of a virtual motor which is set up in the drive unit.

POINT

- The PM sensorless vector control requires the following conditions.
- The motor used are described in the table below.

Motor	Condition
Mitsubishi IPM motor (MM-CF)	Offline auto tuning is not required
IPM motor (other than MM-CF), SPM motor	Offline auto tuning is required

- For the motor capacity, the rated motor current should be equal to or less than the rated inverter current. (It must be 0.4 kW or higher.)
  Using a motor with the rated current substantially lower than the rated inverter current will cause torque ripples, etc. and degrade the speed and torque accuracies. As a reference, select the motor with the rated motor current that is about 40% or higher of the rated inverter current.
- Single-motor operation (one motor to one inverter) is preformed.
- The overall wiring length with the motor is 100 m or less. (Refer to page 43.) (Even with the IPM motor MM-CF, when the wiring length exceeds 30 m, perform offline auto tuning.)
- A surge voltage suppression filter (FR-ASF/FR-BMF) or sine wave filter (MT-BSL/BSC) is not used.

上正科技有限公司
購買、維修 此手冊零組件
電話：037-466888
Email: service@repairtw.com
Line id: @zzzz
www.repairtw.com

5.2.1 Vector control and Real sensorless vector control

Vector control is one of the control techniques for driving an induction motor. To help explain vector control, the fundamental equivalent circuit of an induction motor is shown below:

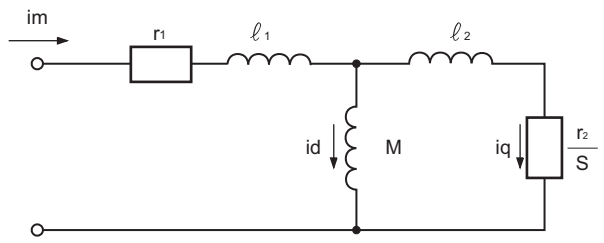

r1: Primary resistance
r2: Secondary resistance
ℓ1: Primary leakage inductance
ℓ2: Secondary leakage inductance
M: Mutual inductance
S: Slip
id: Excitation current
iq: Torque current
im: Motor current

In the above diagram, currents flowing in the induction motor can be classified into a current id (excitation current) for making a magnetic flux in the motor and a current iq (torque current) for causing the motor to develop torque.

In vector control, the voltage and output frequency are calculated to control the motor so that the excitation current and torque current flow to the optimum as described below:

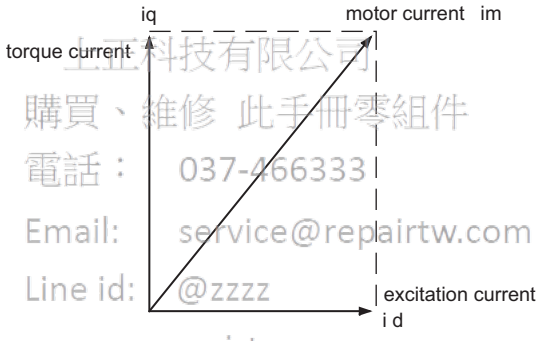

上亞科技有限公司
購買、維修 此手冊零組件
電話： 037-466333
Email: service@repairtw.com
Line id: @zzzz
www.repairtw.com

- The excitation current is controlled to place the internal magnetic flux of the motor in the optimum status.
- The torque command value is derived so that the difference between the motor speed command and the actual speed (speed estimated value for Real sensorless vector control) obtained from the encoder connected to the motor shaft is zero. Torque current is controlled so that torque as set in the torque command is developed.

Motor-generated torque (TM), slip angular velocity (ωs) and the motor's secondary magnetic flux (Φ2) can be found by the following calculation:

$T_M \propto \Phi_2 \cdot iq$

$\Phi_2 = M \cdot id$

$$\omega = \frac{r2}{L2} \cdot \frac{iq}{id}$$

where, L2: secondary inductance

$L2 = \ell_2 + M$

Vector control provides the following advantages:

- Excellent control characteristics when compared to V/F control and other control techniques, achieving the control characteristics equal to those of DC machines.
- Applicable to fast response applications with which induction motors were previously regarded as difficult to use. Applications requiring a wide variable-speed range from extremely low speed to high speed, frequent acceleration/deceleration operations, continuous four-quadrant operations, etc.
- Allows torque control.
- Allows servo-lock torque control which generates a torque in the motor shaft while stopped. (Not available under Real sensorless vector control.)

Block diagram of Real sensorless vector control

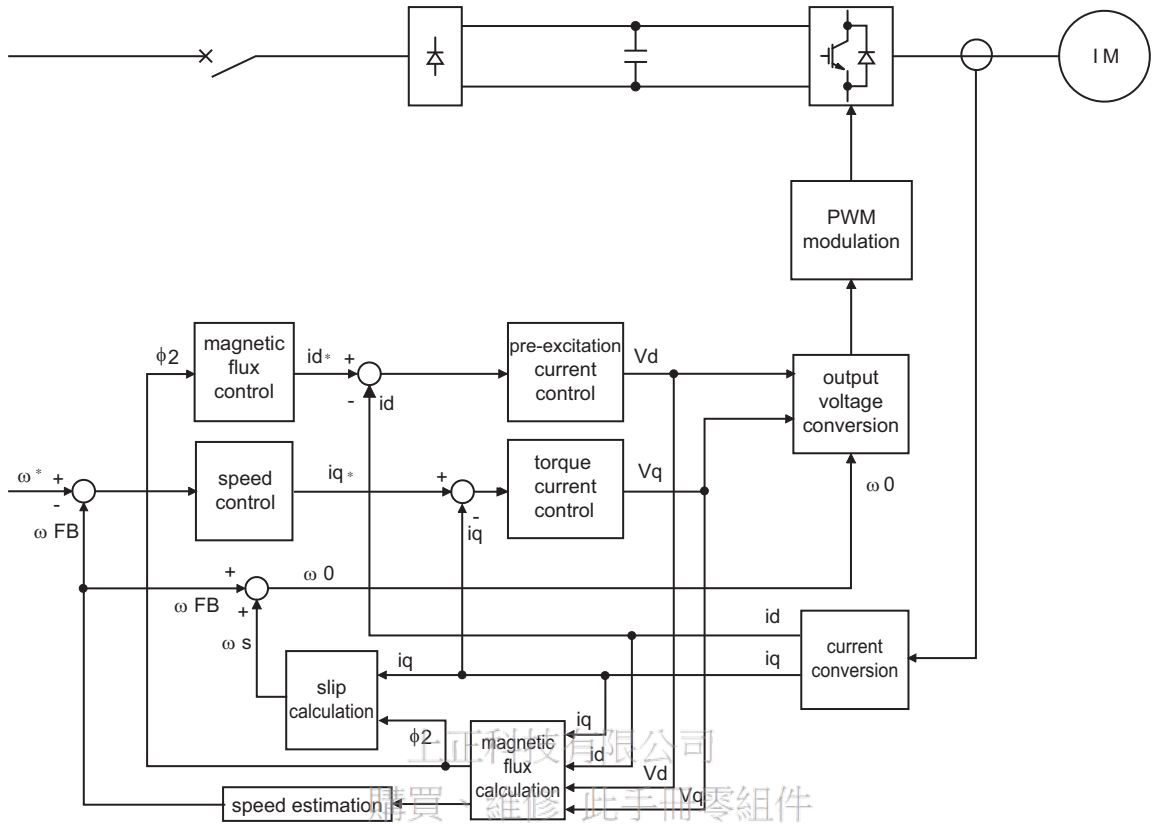

上祺科技有限公司
購買、維修此手冊零組件
電話： 037-466333
Email: service@repairtw.com
Line id: @zzzz
www.repairtw.com

Block diagram of Vector control

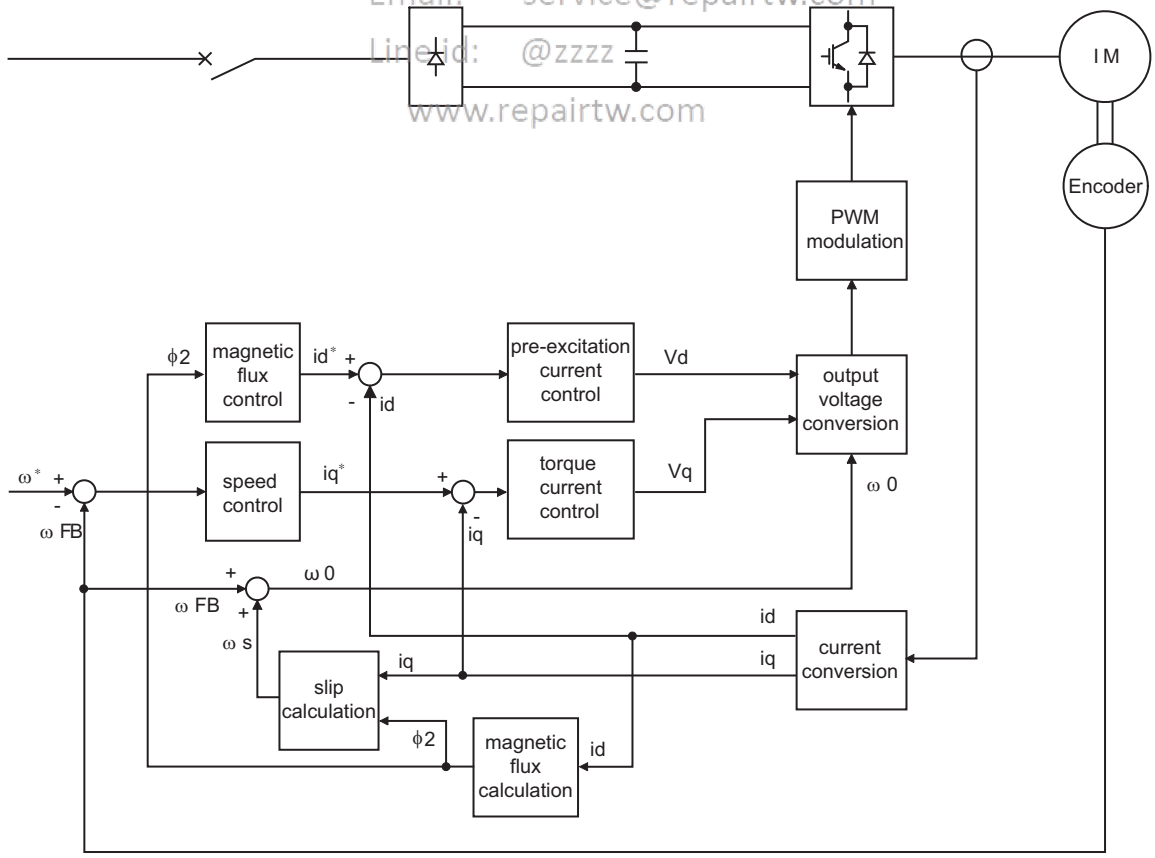

(1) Speed control

Speed control operation is performed to zero the difference between the speed command (ω^*) and actual rotation value detected by encoder (ω_{FB}). At this time, the motor load is found and its result is transferred to the torque current controller as a torque current command (i_q^*).

(2) Torque current control

A voltage (V_q) is calculated to flow a current (i_q) which is identical to the torque current command (i_q^*) found by the speed controller.

(3) Magnetic flux control

The magnetic flux (Φ_2) of the motor is derived from the excitation current (id). The excitation current command (i_d^*) is calculated to use that motor magnetic flux (Φ_2) as a predetermined magnetic flux.

(4) Excitation current control

A voltage (V_d) is calculated to flow a current (i_d) which is identical to the excitation current command (i_d^*).

(5) Output frequency calculation

Motor slip (ω_s) is calculated on the basis of the torque current value (i_q) and magnetic flux (Φ_2). The output frequency (ω_0) is found by adding that slip (ω_s) to the feedback (ω_{FB}) found by a feedback from the encoder.

The above results are used to make PWM modulation and run the motor.

上正科技有限公司
購買、維修 此手冊零組件
電話： 037-466333
Email: service@repairtw.com
Line id: @zzzz
www.repairtw.com

5.2.2 Changing the control method

Set the control method and control mode.

V/F control, Advanced magnetic flux vector control, Real sensorless vector control, Vector control, and PM sensorless vector control are the control methods available for selection.

The control modes are speed control, torque control, and position control.

These are set when selecting Advanced magnetic flux vector control, Real sensorless vector control, Vector control, and PM sensorless vector control. Select a control mode from speed control mode, torque control mode and position control mode under Real sensorless vector control or vector control. The initial setting is V/F control.

When using an IPM motor MM-CF, simply performing the IPM parameter initialization enables the PM sensorless vector control and selects the speed control and position control.

- Select a control method and control mode by using **Pr.800 (Pr.451) Control method selection**.
- The control mode can be switched using the mode switching signal (MC).

Pr.	Name	Initial value	Setting range	Description	
71 C100	**Applied motor**	0*1	0 to 6, 13 to 16, 20, 23, 24, 30, 33, 34, 40, 43, 44, 50, 53, 54, 70, 73, 74, 330, 333, 334, 8090, 8093, 8094, 9090, 9093, 9094	By selecting a standard motor or constant-torque motor, the thermal characteristic and motor constant of each motor are set.	
80 C101	**Motor capacity**	9999	0.4 to 55 kW*1	Set the applied motor capacity.	
			0 to 3600 kW*2		
			9999	V/F control	
81 C102	**Number of motor poles**	9999	2, 4, 6, 8, 10, 12	Set the number of motor poles.	
			9999	V/F control	
83 C104	**Rated motor voltage**	200/400V*3	0 to 1000 V	Set the rated motor voltage (V).	
84 C105	**Rated motor frequency**	9999	10 to 400Hz	Set the rated motor frequency (Hz).	
			9999	The setting value of **Pr.3 Base frequency** is used. *4	
800 G200	**Control method selection**	20	0 to 6	Vector control	
			9	Vector control test operation	
			10 to 12	Real sensorless vector control	
			13, 14	PM sensorless vector control	
			20	V/F control (Advanced magnetic flux vector control)	
			100 to 106	Vector control	Fast-response operation
			109	Vector control, PM sensorless vector control test operation	
			110 to 112	Real sensorless vector control	
			113, 114	PM sensorless vector control	
451 G300	**Second motor control method selection**	9999	10 to 12	Real sensorless vector control	
			13, 14	PM sensorless vector control	
			20	V/F control (Advanced magnetic flux vector control)	
			110 to 112	Real sensorless vector control	Fast-response operation
			113, 114	PM sensorless vector control	
			9999	The setting value of **Pr.800 Control method selection** is used.	

*1 For theFR-A820-03160(55K) or lower, and theFR-A840-01800(55K)or lower.

*2 For theFR-A820-03800(75K) or higher and theFR-A840-02160(75K)or higher.

*3 The initial value differs according to the voltage class. (200V class/400V class)

*4 When the IPM motor MM-CF is selected by **Pr.71 Applied motor**, the rated frequency of the MM-CF is used. When a PM motor other than the MM-CF is selected by **Pr.71**, 75 Hz (for the motor capacity 15 kW or lower) or 100 Hz (18.5 kW or higher) is used.

上正科技有限公司
購買、維修 此手冊零組件
電話: 037-466333
Email: service@repairtw.com
Line id: @zzzz
www.repairtw.com

(1) Setting the motor capacity and the number of motor poles (Pr.80, Pr.81)

- Motor specifications (the motor capacity and the number of motor poles) must be set to select Advanced magnetic flux vector control, Real sensorless vector control or vector control.
- Set the motor capacity (kW) in **Pr.80 Motor capacity** and set the number of motor poles in **Pr.81 Number of motor poles**.

REMARKS

- Setting the number of motor poles in **Pr.81** changes the **Pr.144 Speed setting switchover** setting automatically. (Refer to page 344.)

(2) Selection of control method and control mode

- Select the inverter control method from V/F control, Advanced magnetic flux vector control (speed control), Real sensorless vector control (speed control, torque control), vector control (speed control, torque control, and position control), and PM sensorless vector control (speed control, position control).

<table>
<tr><th>Pr.80 (Pr.453), Pr.81 (Pr.454)</th><th>Pr.71 (Pr,450)</th><th>Pr.800 setting value</th><th>Pr.451 setting value</th><th>Control method</th><th>Control mode</th><th>Remarks</th></tr>
<tr><td rowspan="20">Other than 9999</td><td rowspan="13">Induction motor</td><td>0, 100</td><td>—</td><td rowspan="6">Vector control*1</td><td>Speed control</td><td>—</td></tr>
<tr><td>1, 101</td><td>—</td><td>Torque control</td><td>—</td></tr>
<tr><td>2, 102</td><td>—</td><td>Speed control/torque control switchover</td><td>MC signal ON: torque control
MC signal OFF: speed control</td></tr>
<tr><td>3, 103</td><td>—</td><td>Position control</td><td>—</td></tr>
<tr><td>4, 104</td><td>—</td><td>Speed control/position control switchover</td><td>MC signal ON: position control
MC signal OFF: speed control</td></tr>
<tr><td>5, 105</td><td>—</td><td>Position control/torque control switchover</td><td>MC signal ON: torque control
MC signal OFF: position control</td></tr>
<tr><td>6, 106</td><td>—</td><td>Torque control (variable-current limiter control)</td><td>—</td></tr>
<tr><td>9, 109</td><td>—</td><td colspan="2">Vector control test operation</td><td></td></tr>
<tr><td>10, 13, 14, 110, 113, 114</td><td rowspan="3">Real sensorless vector control</td><td>Speed control</td><td>—</td></tr>
<tr><td>11, 111</td><td>Torque control</td><td>—</td></tr>
<tr><td>12, 112</td><td>Speed control/torque control switchover</td><td>MC signal ON: torque control
MC signal OFF: speed control</td></tr>
<tr><td>20 (initial value)</td><td>20</td><td>Advanced magnetic flux vector control</td><td>Speed control</td><td>—</td></tr>
<tr><td rowspan="4">IPM motor (MM-CF)</td><td>9, 109</td><td>—</td><td colspan="3">PM sensorless vector control test operation</td></tr>
<tr><td colspan="2">13, 113</td><td rowspan="3">PM sensorless vector control</td><td>Position control*3</td><td>—</td></tr>
<tr><td colspan="2">14, 114</td><td>Speed control/position control switchover*3</td><td>MC signal ON: position control
MC signal OFF: speed control</td></tr>
<tr><td colspan="2">Other than 9, 13, 14, 109, 113 and 114</td><td>Speed control</td><td>—</td></tr>
<tr><td rowspan="2">IPM/SPM motor</td><td>9</td><td>—</td><td colspan="3">PM sensorless vector control test operation</td></tr>
<tr><td colspan="2">Other than 9, 109</td><td>PM sensorless vector control</td><td>Speed control</td><td>—</td></tr>
<tr><td>—</td><td>—</td><td>9999 (initial value)</td><td colspan="3">V/F control or Advanced magnetic flux vector control</td></tr>
<tr><td>9999*2</td><td>—</td><td colspan="2">—</td><td colspan="3">V/F control</td></tr>
</table>

上正科技有限公司
購買、維修 此手冊要細件
電話： 037-466338
Email: service@repairtw.com
Line id: @2222
www.repairtw.com

*1 Advanced magnetic flux vector control if FR-A8AP (option) is not installed.

*2 V/F control when **Pr.80** or **Pr.81** is "9999", regardless of the **Pr.800** setting. When **Pr.71** is set to the IPM motor MM-CF, PM sensorless vector control is enabled even if **Pr.80**≠ "9999" or **Pr.81**="9999".

*3 Setting **Pr.788 (Pr.747)**="0" (low-speed range torque characteristic disabled) selects speed control.

(3) Selecting the fast-response operation (Pr.800 = "100 to 106, 109 to 114")

- Setting **Pr.800** = "any of 100 to 106 or 109 to 114" selects the fast-response operation. The fast-response operation is available during vector control, Real sensorless vector control, and PM sensorless vector control.

Control method	Speed response	
	Fast-response operation Pr.800 = "100 to 106, 109 to 114"	Normal-response operation Pr.800 = "0 to 6, 9 to 14"
Vector control	130 Hz at maximum	50 Hz at maximum
Real sensorless vector control	50 Hz at maximum*1	20 Hz at maximum*2
		10 Hz at maximum*3
PM sensorless vector control	50 Hz at maximum	30 Hz at maximum

*1 When driving a 3.7 kW no-load motor.

*2 For the FR-A820-03160(55K) or lower andFR-A840-01800(55K) or lower.

*3 For the FR-A820-03800(75K) or higher and FR-A840-02160(75K) or higher.

REMARKS

- During fast-response operation, the carrier frequency is always 4 kHz. (Refer to page 270.)
- E.THT is more likely to occur when fast-response operation is set at the SLD or LD rating.

(4) Vector control test operation, PM sensorless vector control test operation (Pr.800="9, 109")

- Test operation in the speed control is available without connecting a motor.
  The speed calculation changes to track the speed command, and such speed changes can be checked on the operation panel or by outputting it as analog signals to the terminal FM, AM, or CA.

REMARKS

- Since current is not detected and voltage is not output, monitors related to current and voltage such as output current and output voltage, etc. and output signals do not function.
- For speed calculation, speed is calculated in consideration of **Pr.880 Load inertia ratio**.
- Since current synchronization operation occurs during PM sensorless vector control, the output frequency becomes the same value as the command frequency.

上正科技有限公司
購買、維修 此手冊零組件
電話： 037-466333
Email: service@repairtw.com
Line id: @zzzz
www.repairtw.com

(5) Valid I/O signals for test run

- For the available I/O signals during test run, refer to table below.

1) **Input terminal function selection (Pr.178 to Pr.189)**

Signal name	Function
RL	Low-speed operation command
	Remote setting (setting clear)
	Stop-on-contact selection 0
RM	Middle-speed operation command
	Remote setting (deceleration)
RH	High-speed operation command
	Remote setting (acceleration)
RT	Second function selection
	Stop-on-contact selection 1
AU	Terminal 4 input selection
JOG	Jog operation selection
CS	Selection of automatic restart after instantaneous power failure, flying start
	Electronic bypass function
OH	External thermal relay input *1
REX	15-speed selection
X9	Third function selection
X10	Inverter run enable signal
X11	FR-HC2 connection, instantaneous power failure detection
X12	PU operation external interlock

Signal name	Function
X13	External DC injection brake operation start
X14	PID control valid terminal
X16	PU/External operation switchover
X19	Load torque high-speed frequency
X20	S-pattern acceleration/ deceleration C switchover
LX	Pre-excitation/servo ON
MRS	Output stop
	Electronic bypass function
STOP	Start self-holding selection
TL	Torque limit selection
X37	Traverse function selection
X44	P/PI control switchover *1
TRG	Trace trigger input
TRC	Trace sampling start/end
SQ	Sequence start
STF	Forward rotation command
STR	Reverse rotation command
RES	Inverter reset
X64	PID forward/reverse action switchover
X65	PU/NET operation switchover

Signal name	Function
X66	External/NET operation switchover
X67	Command source switchover
NP	Simple position pulse train sign
CLR	Simple position droop pulse clear
X70	DC feeding operation permission
X71	DC feeding cancel
X72	PID integral value reset
X73	Second PID P control switchover
X74	Magnetic flux decay output shutoff signal
X76	Proximity dog
X77	Pre-charge end command
X78	Second pre-charge end command
X79	Second PID forward/reverse action switchover
X80	Second PID control valid terminal
X87	Sudden stop
X92	Emergency stop

*1 Enabled only during the vector control test operation.

2) **Output terminal function selection (Pr.190 to Pr.196)**

Signal name	Function
RUN	Inverter running
SU	Up to frequency
IPF	Instantaneous power failure/ undervoltage
OL	Overload warning
FU	Output frequency detection
FU2	Second output frequency detection
FU3	Third output frequency detection
RBP	Regenerative brake pre-alarm
PU	PU operation mode
RY	Inverter operation ready
Y12	Output current detection
Y13	Zero current detection
FDN	PID lower limit
FUP	PID upper limit
RL	PID forward/reverse rotation output
MC1	Electronic bypass MC1
MC2	Electronic bypass MC2
MC3	Electronic bypass MC3
FAN	Fan fault output
FIN	Heatsink overheat pre-alarm
Y30	Forward rotation output (for FR-A8AP)
Y31	Reverse rotation output (for FR-A8AP)
RY2	Operation ready 2
LS	Low speed detection
TU	Torque detection

Signal name	Function
Y40	Trace status
FB	Speed detection
FB2	Second speed detection
FB3	Third speed detection
RUN2	Inverter running 2
RUN3	Inverter running and start command is ON
Y46	During deceleration at occurrence of power failure (retained until release)
PID	During PID control activated
Y48	PID deviation limit
Y49	During pre-charge operation
Y50	During second pre-charge operation
Y51	Pre-charge time over
Y52	Second pre-charge time over
Y53	Pre-charge level over
Y54	Second pre-charge level over
IPM	During PM sensorless vector control
Y64	During retry
EV	24 V external power supply operation
SLEEP	PID output interruption
Y79	Pulse train output of output power
RDY	Position control preparation ready
Y85	DC current feeding
Y86	Control circuit capacitor life

Signal name	Function
Y87	Main circuit capacitor life
Y88	Cooling fan life
Y89	Inrush current limit circuit life
Y90	Life alarm
Y91	Fault output 3
Y92	Energy saving average value updated timing
Y93	Current average monitor signal
ALM2	Fault output 2
Y95	Maintenance timer signal
REM	Remote output
ER	Alarm output 2
LF	Alarm
ALM	Fault
FDN2	Second PID lower limit
FUP2	Second PID upper limit
RL2	Second PID forward/reverse rotation output
PID2	Second During PID control activated
SLEEP2	During second PID output shutoff
Y205	Second PID deviation limit
Y206	Cooling fan operation command signal
Y207	Control circuit temperature signal
PS	PU stopped signal

上正科技有限公司
購買、維修 此手冊零組件
電話： 037-460333
Email: service@repairtw.com
Line id: @zzzz
www.repairtw.com

♦ **Parameters referred to** ♦

Pr.178 to Pr.189 (input terminal function selection) ☞ **page 416**
Pr.190 to Pr.196 (output terminal function selection) ☞ **page 370**

(6) Valid/invalid status of monitor outputs during the test run

○ : Valid
× : Invalid (always displays 0)
Δ : Displays accumulated value before the test
— : Not monitored

Types of monitor	DU/PU Monitor display	FM/AM/CA Output
Output frequency	○	○
Fault display	○	—
Frequency setting value	○	○
Running speed	○	○
Converter output voltage	○	○
Electric thermal relay load factor	× *2	× *2
Output current peak value	× *2	× *2
Converter output voltage peak value	○	○
Load meter	○	○
Cumulative energization time	○	—
Reference voltage output	—	○
Actual operation time	○	—
Cumulative power	Δ	—
Trace status	○	×
Station number (RS-485 terminals)	○	—
Station number (PU connector)	○	—
Station number (CC-Link)	○	—
Energy saving effect	○	○
Cumulative energy saving	Δ	—
PID set point	○	○
PID measured value	○	○
PID deviation	○	○*3
Input terminal status	○	—
Output terminal status	○	—
Option input terminal status	○	—

Types of monitor	DU/PU Monitor display	FM/AM/CA Output
Option output terminal status	○	—
Motor thermal load factor	○*4	○*4
Inverter thermal load factor	○*4	○*4
PTC thermistor value	○	—
PID measured value 2	○	○
Remote output 1	○	○
Remote output 2	○	○
Remote output 3	○	○
Remote output 4	○	○
PID manipulated amount	○	○*3
Second PID set point	○	○
Second PID measured value	○	○
Second PID deviation	○	○*3
Second PID measured value 2	○	○
Second PID manipulated amount	○	○*3
Dancer main speed setting	○	○

*1 Different output interface (operation panel, parameter unit, terminal FM/CA or terminal AM) can output different monitored items. For details, refer to page 356.
*2 When the operation is switched to the test run, "0" is displayed. When PM sensorless vector control is selected again after a test run, the output current peak value and the electronic thermal relay load factor from the last operation are displayed.
*3 The monitored status can be output via the terminal AM only.
*4 When the operation is switched to the test run, accumulated thermal value is reduced by considering the output current is "0".

上正科技有限公司
購買、維修 此手冊零組件
電話：037-466333
Email: service@repairtw.com
Line id: @zzzz
www.repairtw.com

♦ Parameters referred to ♦

Pr.52 Operation panel main monitor selection page 346
Pr.158 AM terminal function selection page 356

(7) Changing the control method with external terminals (RT signal, X18 signal)

- Control method (V/F control, Advanced magnetic flux vector control, Real sensorless vector control, Vector control,) can be switched among using external terminals.
  The control method can be either switched using the Second function selection (RT) signal or the V/F switchover (X18) signal.
- When using the RT signal, set the second motor in **Pr.450 Second applied motor** and set the second motor's control method in **Pr.451 Second motor control method selection**. Turning ON the RT signal enables the second function, enabling the switchover of the control method.
- When using the X18 signal, turning ON the X18 signal switches the presently-selected control method (Advanced magnetic flux vector control, Real sensorless vector control, vector control) to the V/F control. At this time, the second functions including electronic thermal characteristic are not changed. Use this method to switch the control method for one motor. (To switch the second functions, use the RT signal.)
  To input the X18 signal, set "18" in any of **Pr.178 to Pr.189 (input terminal function selection)** to assign the function.

First motor control method	Second motor control method (RT signal-ON)	Pr.450 setting value	Pr.453, Pr.454 setting value	Pr.451 setting value
V/F control	V/F control	9999	—	—
		—	—	9999
		—	9999*2	—
	Advanced magnetic flux vector control	Induction motor	Other than 9999	20
	Real sensorless vector control			10 to 14
	PM sensorless vector control	IPM/SPM motor		Other than 9999
Advanced magnetic flux vector control Real sensorless vector control Vector control PM sensorless vector control *1	Same control as the first motor*1	9999	—	—
	V/F control	—	9999*2	—
	Advanced magnetic flux vector control	Induction motor	Other than 9999	20, 9999
	Real sensorless vector control			10 to 14
	PM sensorless vector control	IPM/SPM motor		Other than 9999

昌昇科技有限公司
購買、維修 此手冊零組件
電話：037-466333
email: service@repairtw.com
Line id: @zzz
www.repairtw.com

*1 Turning the X18 signal ON while **Pr.81** ="12, 14, 16, 18, or 20" selects V/F control. If the X18 signal is unassigned, RT signal performs the same function; Turning ON the RT signal selects V/F control.

*2 V/F control when **Pr.453** or **Pr.454** is set to "9999" regardless of the **Pr.451** setting. When **Pr.450** is set to the IPM motor MM-CF, PM sensorless vector control is enabled even if **Pr.453** ≠ "9999" or **Pr.454** = "9999".

REMARKS

- RT signal is assigned to the terminal RT in the initial status. Set "3" in one of **Pr.178 to Pr.189 (input terminal function selection)** to assign the RT signal to another terminal.
- The RT signal is a second function selection signal. The RT signal also enables other second functions. (Refer to **page 420**.)
- The control method could be changed by external terminals (RT signal, X18 signal) while the inverter is stopped. If a signal is switched during the operation, the control method changes after the inverter stops.

(8) Changing the control mode with external terminals (MC signal)

- To use ON/OFF of the MC signal to switch the control mode, set **Pr.800** or **Pr.451**. Refer to page 161 and set **Pr.800** or **Pr.451**.
  To input the MC signal, set "26" in any of **Pr.178 to Pr.189 (input terminal function selection)** to assign the function.
- When using an analog input terminal (terminal 1, 4) for torque limit and torque command, switching of the control mode changes the terminal function as shown below.
- Functions of the terminal 1 under different control modes

Pr.868 setting	Speed control/torque control switchover*1		Speed control/position control switchover*2		Position control/torque control switchover*3	
	Speed control (MC signal-OFF)	Torque control (MC signal-ON)	Speed control (MC signal-OFF)	Position control (MC signal-ON)	Position control (MC signal-OFF)	Torque control (MC signal-ON)
0 (initial value)	Speed setting assistance	Speed limit assistance	Speed setting assistance	—	—	Speed setting assistance
1	Magnetic flux command *4	Magnetic flux command *4	Magnetic flux command*4	Magnetic flux command*4	Magnetic flux command	Magnetic flux command
2	Regenerative torque limit (**Pr.810**=1)	—	Regenerative torque limit (**Pr.810**=1)	Regenerative torque limit (**Pr.810**=1)	Regenerative torque limit (**Pr.810**=1)	—
3	—	Torque command (**Pr.804**=0)	—	—	—	Torque command (**Pr.804**=0)
4	Torque limit (**Pr.810**=1)	Torque command (**Pr.804**=0)	Torque limit (**Pr.810**=1)	Torque limit (**Pr.810**=1)	Torque limit (**Pr.810**=1)	Torque command (**Pr.804**=0)
5	—	Forward/reverse rotation speed limit (**Pr.807**=2)	—	—	—	Forward/reverse rotation speed limit (**Pr.807**=2)
6	—	—	Torque bias*4	—	—	—
9999	—	—	—	—	—	—

- Functions of the terminal 4 under different control modes

Pr.858 setting	Speed control/torque control switchover*1		Speed control/position control switchover*2		Position control/torque control switchover*3	
	Speed control (MC signal-OFF)	Torque control (MC signal-ON)	Speed control (MC signal-OFF)	Position control (MC signal-ON)	Position control (MC signal-OFF)	Torque control (MC signal-ON)
0 (initial value)	Speed command (AU signal-ON)	Speed limit (AU signal-ON)	Speed command (AU signal-ON)	—	—	Speed limit (AU signal-ON)
1	Magnetic flux command *4*5	Magnetic flux command *4*5	Magnetic flux command *4*5	Magnetic flux command *4*5	Magnetic flux command *5	Magnetic flux command *5
4	Torque limit (**Pr.810**=1) *6	—	Torque limit (**Pr.810**=1) *6	Torque limit (**Pr.810**=1) *6	Torque limit (**Pr.810**=1) *6	—
9999	—	—	—	—	—	—

*1 Real sensorless vector control (**Pr.800**="12"), vector control (**Pr.800**="2")
*2 Vector control (**Pr.800**="4"), PM sensorless vector control (**Pr.800**="14")
*3 Vector control (**Pr.800**="5")
*4 Enabled under vector control
*5 Disabled when **Pr.868**="1".
*6 Disabled when **Pr.868**="4".
— : No function

REMARKS

- Switching between the speed control and the torque control is always enabled regardless of the motor status: in a stop, in running, or in DC injection brake (during pre-excitation).
- During operation, switching between speed control and position control or between torque control and position control occurs when the output frequency reaches **Pr.865 Low speed detection** or lower with no position command provided.
- Changing the terminal assignment using **Pr.178 to Pr.189 (input terminal function selection)** may affect the other functions. Set parameters after confirming the function of each terminal.

♦ Parameters referred to ♦

Pr.178 to Pr.189 (input terminal function selection) ☞ page 416
Pr.450 Second applied motor ☞ page 424
Pr.804 Torque command source selection ☞ page 211
Pr.807 Speed limit selection ☞ page 213
Pr.810 Torque limit input method selection ☞ page 181
Pr.858 Terminal 4 function assignment, Pr.868 Terminal 1 function assignment ☞ page 395

上正科技有限公司
購買、維修 此手冊零組件
電話： 037-466553
Email: service@repairtw.com
Line id: @zzzz
www.repairtw.com

5.2.3 Selecting the Advanced magnetic flux vector control Magnetic flux

POINT

To use the Advanced magnetic flux vector control, set the motor capacity, the number of motor poles, and the motor type using **Pr.80** and **Pr.81**.

(1) Advanced magnetic flux vector control

Perform secure wiring. (Refer to page 33.)

↓

Make the motor setting. **(Pr.71)**

Motor		Pr.71 setting*1	Remarks
Mitsubishi standard motor Mitsubishi high-efficiency motor	SF-JR	0 (initial value) (3, 4)	
	SF-JR 4P 1.5 kW or lower	20	
	SF-HR	40	
	Others	0 (3)	Offline auto tuning is required.*2
Mitsubishi constant-torque motor	SF-JRCA 4P	1	
	SF-HRCA	50	
	Other (SF-JRC, etc.)	1 (13)	Offline auto tuning is required.*2
Mitsubishi high-performance energy-saving motor	SF-PR	70	
Other manufacturer's standard motor	—	0 (3)	Offline auto tuning is required.*2
Other manufacturer's constant-torque motor	—	1 (13)	Offline auto tuning is required.*2

*1 For the other setting values of **Pr.71**, refer to page 424.

*2 For offline auto tuning, refer to page 428.

士正科技有限公司
購買、維修 此手冊零組件
電話： 037-466333
Email: service@repairtw.com
www.repairtw.com

↓

Set the motor overheat protection. **(Pr.9)** (Refer to page 322)

↓ Set the rated motor current (A) in **Pr.9 Electronic thermal O/L relay**.

Setting the motor capacity and the number of motor poles. **(Pr.80, Pr.81)** (Refer to page 160.)

↓ Set the motor capacity (kW) in **Pr.80 Motor capacity**, and set the number of motor poles in **Pr.81 Number of motor poles**. (V/F control is performed when the setting is "9999" (initial value).)

Set the rated motor voltage and frequency. **(Pr.83, Pr.84)** (Refer to page 428.)

↓ Set the rated motor voltage (V) in **Pr.83 Rated motor voltage**, and set the rated motor frequency (Hz) in **Pr.84 Rated motor frequency**.

Set the operation command. (Refer to page 299.)

↓ Select the start command and speed command.

Test run

As required

- Perform offline auto tuning. **(Pr.96)** (Refer to page 428.)
- Select the online auto tuning. **(Pr.95)** (Refer to page 445.)

REMARKS

- To perform driving in a better accuracy, perform offline auto tuning, then set the online auto tuning, and select Real sensorless vector control.
- Under this control, rotations are more likely to be uneven than under V/F control. (This control method is not suitable for grinder, wrapping machine, etc., which require even rotation at a low speed.)
- For FR-A820-03160(55K) or lower and FR-A840-01800(55K) or lower, the operation with a surge voltage suppression filter (FR-ASF-H/FR-BMF-H) installed between the inverter and the motor may reduce the output torque.
- The optional sine wave filter (MT-BSL/BSC) cannot be used between the inverter and the motor.
- Changing the terminal assignment using **Pr.178 to Pr.189 (input terminal function selection)** may affect the other functions. Set parameters after confirming the function of each terminal.

(2) Keeping the motor speed constant when the load fluctuates (speed control gain)

Pr.	Name	Initial value	Setting range	Description
89 **G932**	**Speed control gain (Advanced magnetic flux vector)**	9999	0 to 200%	Makes adjustments to keep the motor speed constant during variable load operation under Advanced magnetic flux vector control. The reference value is 100%.
			9999	The gain set by **Pr.71.** (The gain set in accordance with the motor.)
569 **G942**	**Second motor speed control gain**	9999	0 to 200%	Makes adjustments to keep the second motor speed constant during variable load operation under Advanced magnetic flux vector control. The reference value is 100%.
			9999	The gain set by **Pr.450.** (The gain set in accordance with the motor.)

上正科技有限公司
購買、維修 此手冊零組件
電話： 037-466333
Email: service@repairtw.com
line id: @zzzz
www.repairtw.com

- Use **Pr.89** to keep the motor speed constant during variable load operation.
  (This parameter is useful to make adjustments on the motor speed after replacing a conventional model with an FR-A800 series model.)

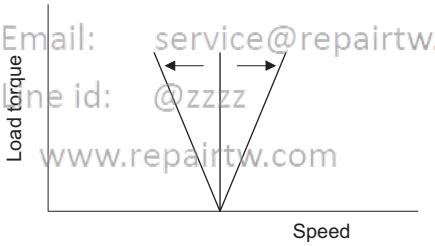

(3) Driving two motors under Advanced magnetic flux vector control

- Turning ON the Second function selection (RT) signal enables the second motor operation.
- Set a second motor in **Pr.450 Second applied motor**. (In the initial setting, "9999 (no second motor)" is selected. Refer to page 424.)

Function	RT signal ON (second motor)	RT signal OFF (first motor)
Applied motor	Pr.450	Pr.71
Motor capacity	Pr.453	Pr.80
Number of motor poles	Pr.454	Pr.81
Speed control gain (Advanced magnetic flux vector)	Pr.569	Pr.89
Control method selection	Pr.451	Pr.800

REMARKS

- The RT signal is a second function selection signal. The RT signal also enables other second functions. (Refer to page 420.)
  RT signal is assigned to the terminal RT in the initial status. Set "3" in any of **Pr.178 to Pr.189 (input terminal function selection)** to assign the RT signal to another terminal.
- Changing the terminal assignment using **Pr.178 to Pr.189 (input terminal function selection)** may affect the other functions. Set parameters after confirming the function of each terminal.

♦ Parameters referred to ♦

Pr.71, Pr.450 Applied motor ☞page 424

Pr.800, Pr.451 Control method selection ☞page 160

5.2.4 Selecting the PM sensorless vector control PM

(1) Selecting the PM sensorless vector control by performing parameter initialization on the operation panel (1 PM)

POINT

- The parameters required to drive an MM-CF IPM motor are automatically changed as a batch. (Refer to page 171.)
- [PM] on the operation panel (FR-DU08) is on when the PM sensorless vector control is set.

Operation example **Initialize the parameter settings for an MM-CF IPM motor by selecting IPM parameter initialization on the operation panel.**

	Operation
1.	Screen at power-ON The monitor display appears.
2.	Changing the operation mode Press PU/EXT to choose the PU operation mode. [PU] indicator is on.
3.	Parameter setting mode MODE [PU] indicator is on. [PRM] indicator is on.
4.	IPM parameter initialization Turn dial until 1 PM (IPM parameter initialization) appears.
5.	Setting value display Press SET to read the present set value. "0" (initial value) appears.
6.	Changing the setting value Turn dial to change the set value to "3003", then press SET. "3003" and "1 PM" flicker alternately. The setting is completed.

上正科技有限公司
購買・維修 此手冊零組件
電話： 037-466333
Email: service@repairtw.com
Line id: @zzzz
www.repairtw.com

Setting	Description
0	Parameter settings for an induction motor
3003	Parameter settings for an IPM motor MM-CF (rotations per minute)

REMARKS

- If parameters are initialized for a PM motor in the IPM initialization mode, the **Pr.998 PM parameter initialization** setting is automatically changed.
- In the initial parameter setting, the capacity same as the inverter capacity is set in **Pr.80 Motor capacity**. To use a motor capacity that is one rank lower than the inverter capacity, set **Pr.80 Motor capacity** by selecting the mode on the operation panel.
- To set a speed or to display monitored items in frequency, **Pr.998**. (Refer to page 170.)

(2) Initializing the parameters required for the PM sensorless vector control (Pr.998)

- PM parameter initialization sets parameters required for driving an IPM motor MM-CF.
- The offline auto tuning enables the operation with an IPM motor other than MM-CF and with SPM motors.
- Two MM-CF IPM parameter initialization methods are available; setting **Pr.998 PM parameter initialization**, and selecting I PM(IPM parameter initialization) mode on the operation panel.

Pr.	Name	Initial value	Setting range	Description	
998 E430	**PM parameter initialization**	0	0	Parameter settings for an induction motor (frequency)	The parameter settings required to drive an induction motor are set.
			3003	For IPM motor MM-CF. Parameter setting (rotations per minute)	The parameters settings required to drive an IPM motor are set.
			3103	For IPM motor MM-CF. Parameter setting (frequency)	
			8009	The parameters settings required to drive an IPM motor other than MM-CF are set. (rotations per minute)(after tunning)	The parameters settings required to drive an IPM motor are set. (Set **Pr.71 Applied motor** and perform offline auto tuning in advance. (Refer to page 438.))
			8109	The parameters settings required to drive an IPM motor other than MM-CF are set. (frequency)(after tunning)	
			9009	The parameters settings required to drive an SPM motor are set. (rotations per minute)(after tunning)	The parameters settings required to drive an SPM motor are set. (Set **Pr.71 Applied motor** and perform offline auto tuning in advance. (Refer to page 438.))
			9109	The parameters settings required to drive an SPM motor are set. (frequency)(after tunning)	

上正科技有限公司
購買、維修 此手冊零組件
電話： 037-466333
Email: service@repairtw.com
Line id: @zzzz
www.repairtw.com

- To use a motor capacity that is one rank lower than the inverter capacity, set **Pr.80 Motor capacity** before performing IPM parameter initialization.
- When **Pr.998**="3003, 8009, or 9009", the monitor is displayed and the frequency is set using the motor rotations per minute. To use frequency to display or set, set **Pr. 998**="3103, 8109, or 9109".
- Set **Pr.998**="0" to change the PM sensorless vector control parameter settings to the parameter settings required to drive an induction motor.
- When using an IPM motor other than MM-CF, set **Pr.998** ="8009, 8109, 9009, or 9109". The setting can be made after performing offline auto tuning.

REMARKS

- Make sure to set **Pr.998** before setting other parameters. If the **Pr.998** setting is changed after setting other parameters, some of those parameters will be initialized too. (Refer to "(3) PM parameter initialization list" for the parameters that are initialized.)
- To change back to the parameter settings required to drive an induction motor, perform parameter clear or all parameter clear
- If the setting of **Pr.998 PM parameter initialization** is changed between "3003, 8009, 9009 (rotations per minute)" ⇔ "3103, 8109, 9109 (frequency)", the target parameters are respectively set to their initial values. The purpose of **Pr.998** is not to change the display units. Use **Pr.144 Speed setting switchover** to change the display units between rotations per minute and frequency. **Pr.144** enables switching of display units between rotations per minute and frequency without initializing the parameter settings.

(3) IPM parameter initialization list

- The parameter settings in the following table are changed to the settings required to perform PM sensorless vector control by selecting PM sensorless vector control with the IPM parameter initialization mode on the operation panel or with **Pr.998 PM parameter initialization**.
- Performing parameter clear or all parameter clear sets back the parameter settings to the settings required to drive an induction motor.

Pr.	Name	Pr.998	Setting						Setting increments	
			Induction motor		PM motor (rotations per minute)		PM motor (frequency)			
			0 (initial value)		3003 (MM-CF)	8009 9009 (other than MM-CF)	3103 (MM-CF)	8109 9109 (other than MM-CF)	3003, 8009, 9009	0, 3103, 8109, 9109
			FM	CA						
1	Maximum frequency		120 Hz*1 / 60 Hz*2		3000 r/min	Maximum motor frequency*8	200 Hz	Maximum motor frequency*8	1 r/min	0.01 Hz
4	Multi-speed setting (high speed)		60 Hz	50 Hz	2000 r/min	**Pr.84**	133.33 Hz	**Pr.84**	1 r/min	0.01 Hz
9	Electronic thermal O/L relay		Rated inverter current		Rated motor current (Refer to page 674.)	—	Rated motor current (Refer to page 674.)	—	0.01 A*1 / 0.1 A*2	
13	Starting frequency		0.5 Hz		8 r/min*5	**Pr.84** ×10%	0.5 Hz*6	**Pr.84** ×10%	1 r/min	0.01 Hz
15	Jog frequency		5 Hz		200 r/min	**Pr.84** ×10%	13.33 Hz	**Pr.84** ×10%	1 r/min	0.01 Hz
18	High speed maximum frequency		120 Hz*1 / 60 Hz*2		3000 r/min	—	200 Hz	—	1 r/min	0.01 Hz
20	Acceleration/deceleration reference frequency		60 Hz	50 Hz	2000 r/min	**Pr.84**	133.33 Hz	**Pr.84**	1 r/min	0.01 Hz
22	Stall prevention operation level		150%*7		150%*7				0.1%	
37	Speed display		0		0				1	
55	Frequency monitoring reference		60 Hz	50 Hz	2000 r/min	**Pr.84**	133.33 Hz	**Pr.84**	1 r/min	0.01 Hz
56	Current monitoring reference		Rated inverter current		Rated motor current (Refer to page 674.)	**Pr.859**	Rated motor current (Refer to page 674.)	**Pr.859**	0.01 A*1 / 0.1 A*2	
71	Applied motor		0		330*3	—	330*3	—	1	
80	Motor capacity		9999		Motor capacity (MM-CF)*4	—	Motor capacity (MM-CF)*4	—	0.01 kW*1 / 0.1 kW*2	
81	Number of motor poles		9999		8*4	—	8*4	—	1	
84	Rated motor frequency		9999		2000 r/min	—	133.33 Hz	—	1 r/min	0.01 Hz
116	Third output frequency detection		60 Hz	50 Hz	2000 r/min	**Pr.84**	133.33 Hz	**Pr.84**	1 r/min	0.01 Hz
125 (903)	Terminal 2 frequency setting gain frequency		60 Hz	50 Hz	2000 r/min	**Pr.84**	133.33 Hz	**Pr.84**	1 r/min	0.01 Hz
126 (905)	Terminal 4 frequency setting gain frequency		60 Hz	50 Hz	2000 r/min	**Pr.84**	133.33 Hz	**Pr.84**	1 r/min	0.01 Hz
144	Speed setting switchover		4		108	**Pr.81** +100	8	**Pr.81**	1	
240	Soft-PWM operation selection		1		0				1	
263	Subtraction starting frequency		60 Hz	50 Hz	2000 r/min	**Pr.84**	133.33 Hz	**Pr.84**	1 r/min	0.01 Hz
266	Power failure deceleration time switchover frequency		60 Hz	50 Hz	2000 r/min	**Pr.84**	133.33 Hz	**Pr.84**	1 r/min	0.01 Hz
374	Overspeed detection level		9999		3150 r/min	Maximum motor frequency +10 Hz*8	210 Hz	Maximum motor frequency +10 Hz*8	1 r/min	0.01 Hz

昌祥科技有限公司 購買、維修 此手冊零組件 電話: 0937466335 Email: service@repairtw.com line id: @xmx www.repairtw.com

Control method

Pr.	Name	Pr.998	Setting						Setting increments	
			Induction motor		PM motor (rotations per minute)		PM motor (frequency)			
			0 (initial value)		3003 (MM-CF)	8009 9009 (other than MM-CF)	3103 (MM-CF)	8109 9109 (other than MM-CF)	3003, 8009, 9009	0, 3103, 8109, 9109
			FM	CA						
386	Frequency for maximum input pulse		60 Hz	50 Hz	2000 r/min	**Pr.84**	133.33 Hz	**Pr.84**	1 r/min	0.01 Hz
505	Speed setting reference		60 Hz	50 Hz	133.33 Hz	**Pr.84**	133.33 Hz	**Pr.84**	0.01 Hz	
557	Current average value monitor signal output reference current		Rated inverter current		Rated motor current (Refer to page 674.)	**Pr.859**	Rated motor current (Refer to page 674.)	**Pr.859**	0.01 A*1	
									0.1 A*2	
820	Speed control P gain 1		60%		30%				1%	
821	Speed control integral time 1		0.333 s		0.333 s				0.001 s	
824	Torque control P gain 1 (current loop proportional gain)		100%		100%				1%	
825	Torque control integral time 1 (current loop integral time)		5 ms		20 ms				0.1 ms	
870	Speed detection hysteresis		0 Hz		8 r/min		0.5 Hz		1 r/min	0.01 Hz
885	Regeneration avoidance compensation frequency limit value		6 Hz		200 r/min	**Pr.84** ×10%	13.33 Hz	**Pr.84** ×10%	1 r/min	0.01 Hz
893	Energy saving monitor reference (motor capacity)		Rated inverter capacity		Motor capacity **(Pr.80)**				0.01 kW*1	
									0.1 kW*2	
C14 (918)	Terminal 1 gain frequency (speed)		60 Hz	50 Hz	2000 r/min	**Pr.84**	133.33 Hz	**Pr.84**	1 r/min	0.01 Hz
1121	Per-unit speed control reference frequency		120 Hz*1		3000 r/min	Maximum motor frequency*8	200 Hz	Maximum motor frequency*8	1 r/min	0.01 Hz
			60 Hz*2							

—: Not changed

上正科技有限公司
購買、維修 此手冊零組件
電話：037-466333
Email: service@repairtw.com
line id: @zzzz
www.repairtw.com

*1 Initial value for the FR-A820-03160(55K) or lower and FR-A840-01800(55K) or lower.
*2 Initial value for the FR-A820-03800(75K) or higher and FR-A840-02160(75K) and higher.
*3 Setting **Pr.71 Applied motor** ="333, 334, 8093, 8094, 9093, or 9094" does not change the **Pr.71** setting.
*4 When a value other than "9999" is set, the set value is not changed.
*5 200 r/min when **Pr.788 Low speed range torque characteristic selection** = "0".
*6 13.33 Hz when **Pr.788 Low speed range torque characteristic selection** = "0".
*7 110% for SLD, 120% for LD, 150% for ND, and 200% for HD (Refer to **Pr.570 Multiple rating setting** page 258.)
*8 The **Pr.702 Maximum motor frequency** is used as the maximum motor frequency. When **Pr.702** ="9999 (initial value)", the **Pr.84 Rated motor frequency** is used as the maximum motor frequency.

REMARKS

If IPM parameter initialization is performed in rotations per minute (**Pr.998** = "3003, 8009, or 9009"), the parameters not listed in the table and the monitored items are also set and displayed in rotations per minute.

5.2.5 Low-speed range torque characteristics PM

The torque characteristics in a low-speed range under PM sensorless vector control can be changed.

Pr.	Name	Initial value	Setting range	Operation
788 G250	Low speed range torque characteristic selection	9999	0	Disables the low-speed range torque characteristic (current synchronization operation).
			9999*1	Enables the low-speed range torque characteristic (high frequency superposition control)
747 G350	Second motor low-speed range torque characteristics	9999	0	Disables the low-speed range torque characteristic (current synchronization operation).
			9999*1	Enables the low-speed range torque characteristic (high frequency superposition control) while the RT signal is ON.

*1 The low-speed range high-torque characteristic (current synchronization operation) is disabled for PM motors other than MM-CF, even if "9999" is set.

(1) When the low-speed range torque characteristic is enabled (Pr.788="9999" initial value)

- The high frequency superposition control provides enough torque in the low-speed range operation.
- The low-speed range high-torque characteristic is only valid with an MM-CF motor.

(2) When the low-speed range high-torque characteristic is disabled (Pr.788="0")

- The current synchronization operation reduces much motor noise compared with the high frequency superposition control.
- The torque in a low-speed range is low. Use this setting for an operation with light start-up load.

(3) Low-speed range high-torque characteristic is set for the second motor (Pr.747)

- Use **Pr.747 Second motor low-speed range torque characteristics** to switch the torque characteristic according to the application or to switch among motors connected to one inverter.
- The **Pr.747** becomes valid when the RT signal turns ON.

上亚科技有限公司
購買、維修、出租、回收
電話：057-466333
Email: service@repairtw.com
Line id: @zzzz
www.repairtw.com

REMARKS

- Position control under PM sensorless vector control is not available when the current synchronization operation is selected. Zero speed and servo lock are also disabled during current synchronization operation.
- For torque characteristics, refer to page 675.
- RT signal is assigned to the terminal RT in the initial status. Set "3" in any of **Pr.178 to Pr.189 (input terminal function selection)** to assign the RT signal to another terminal.
- Changing the terminal assignment using **Pr.178 to Pr.189 (input terminal function selection)** may affect the other functions. Set parameters after confirming the function of each terminal.

♦ **Parameters referred to** ♦

Pr.178 to Pr.189 (input terminal function selection) ☞page 416

5.3 Speed control under Real sensorless vector control, vector control, PM sensorless vector control

Purpose	Parameter to set			Refer to page
To limit the torque during speed control	Torque limit	P.H500, P.H700 to P.H703, P.H710, P.H720, P.H721, P.H730, P.T010, P.T040, P.G210	Pr.22, Pr.803, Pr.810, Pr.812 to Pr.817, Pr.858, Pr.868, Pr.874	181
To adjust the gain for speed control	Easy gain tuning Gain adjustment	P.C112 to P.C114, P.G206, P.G211, P.G212, P.G218, P.G260, P.G261, P.G311, P.G312, P.G361	Pr.818 to Pr.821, Pr.830, Pr.831, Pr.880, Pr.1115 to Pr.1118, Pr.1121	188
To improve the motor trackability for the speed command changes	Speed feed forward control, model adaptive speed control	P.G220 to P.G224, P.G262, P.C114	Pr.828, Pr.877 to Pr.881, Pr.1119	196
To stabilize the speed detection signal	Speed detection filter	P.G215, P.G315	Pr.823, Pr.833	248
To make starting torque start-up faster	Torque bias	P.G230 to P.G238	Pr.840 to Pr.848	202
To avoid motor overrunning	Speed deviation excess detection, speed limit, deceleration check	P.H415 to P.H417, P.H881	Pr.285, Pr.853, Pr.873, Pr.690	202
To avoid mechanical resonance	Notch filter	P.G601 to P.G603	Pr.1003 to Pr.1005	204
To adjust the gain during PM sensorless vector control	Speed control gain adjustment	P.G211, P.G212	Pr.820, Pr.821	188

上正科技有限公司
購買、維修 此手冊零組件
電話: 037-466333
Email: service@repairtw.com
www.repairtw.com

Speed control performs control so that the speed command and the actual motor rotation speed match.

Speed control under Real sensorless vector control, vector control, PM sensorless vector control

(1) Control block diagram

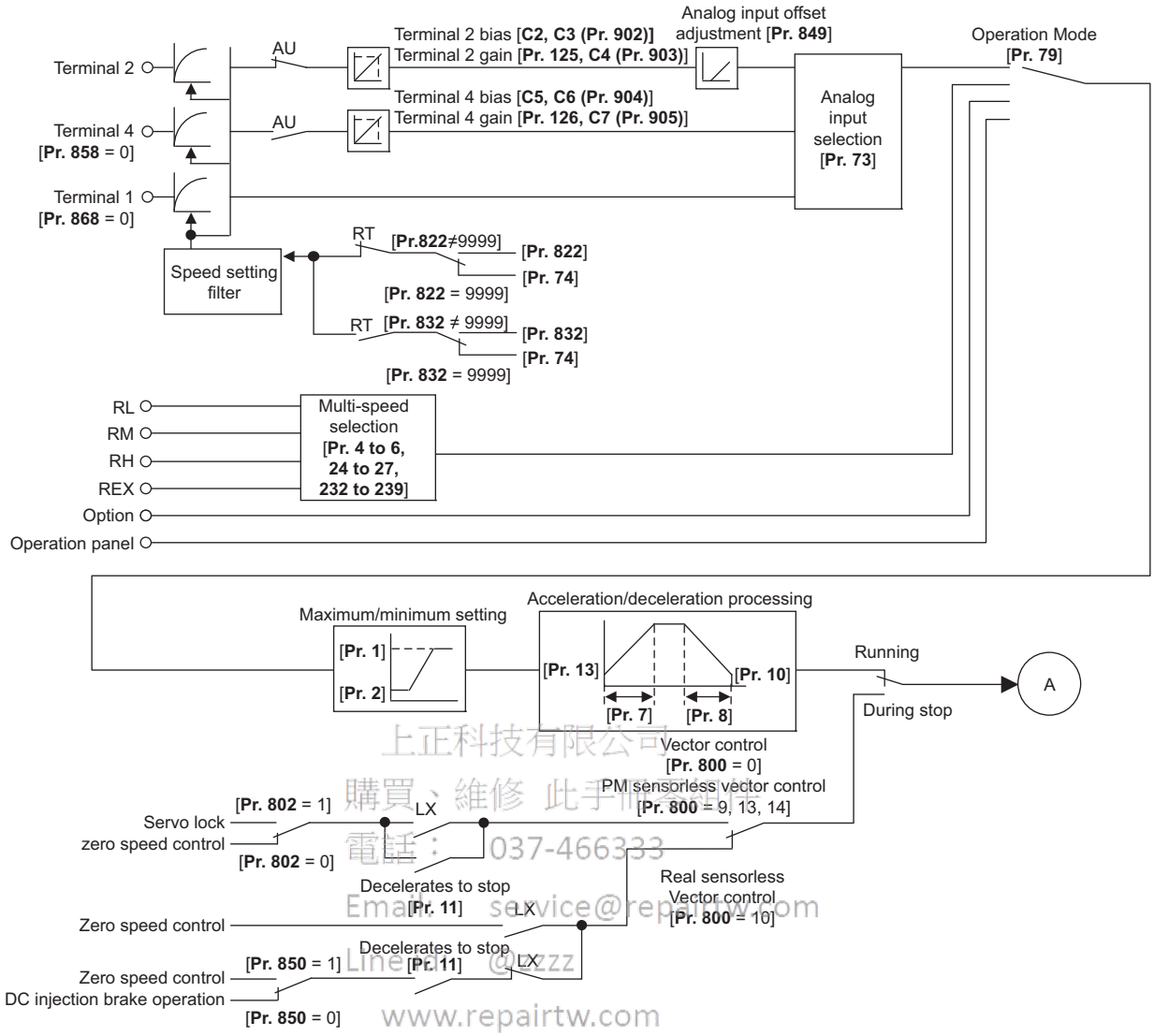

上正科技有限公司
購買、維修 此手冊零組件
電話： 037-466333
Email: service@repairtw.com
Line id: @zzz
www.repairtw.com

5

Speed control under Real sensorless vector control, vector control, PM sensorless vector control

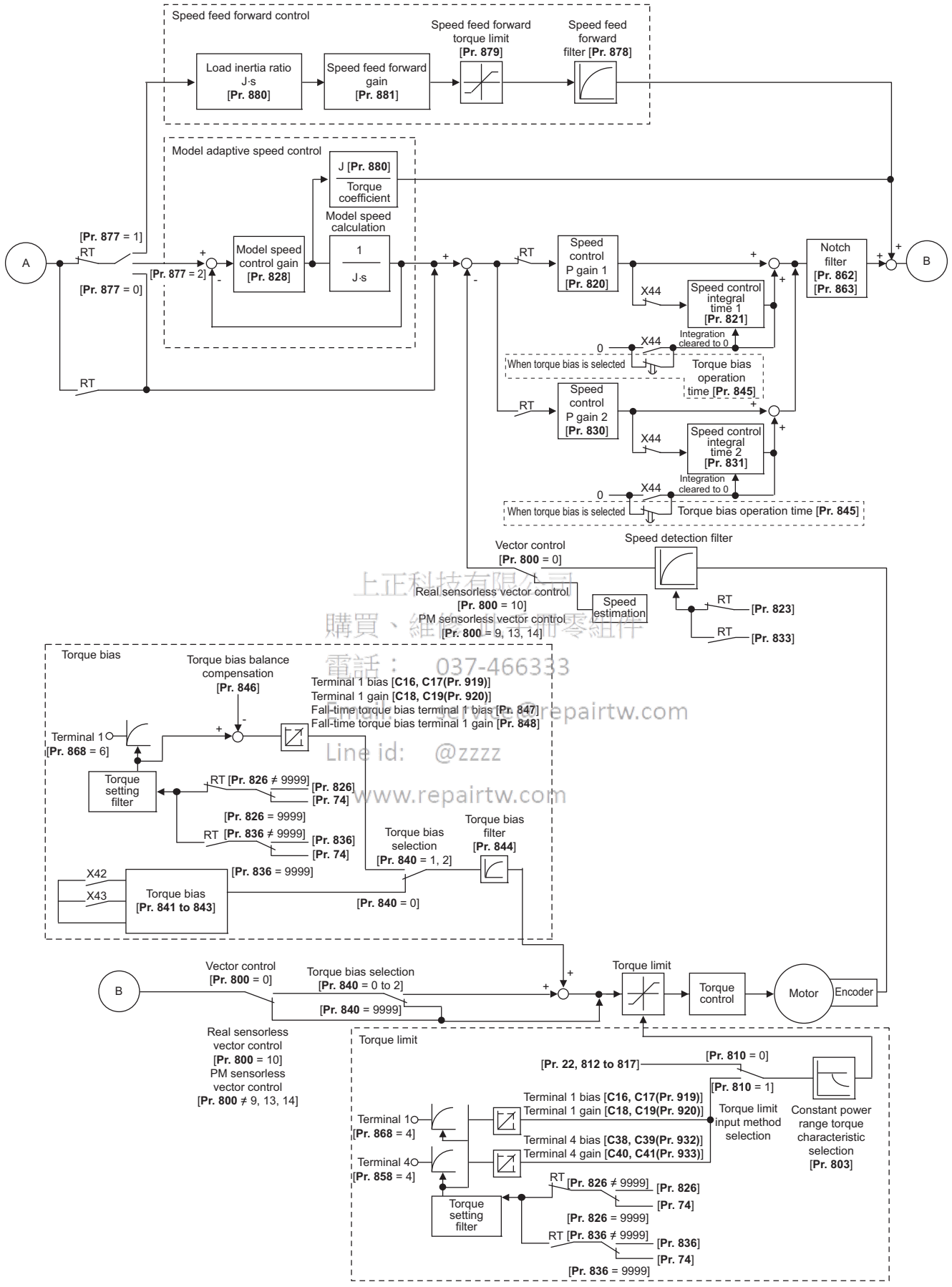

上正科技有限公司
購買、維修變頻器零組件
電話： 037-466333
Email: service@repairtw.com
Line id: @zzzz
www.repairtw.com

5.3.1 Setting procedure of Real sensorless vector control (speed control) Sensorless

Perform secure wiring. (page 33)

↓

Set the motor. **(Pr.71)** (Refer to page 424.)

↓ Set **Pr.71 Applied motor** to "3" (standard motor) or "13" (constant-torque motor).

Set the overheat protection of the motor. **(Pr.9)** (Refer to page 322.)

↓ Set the rated motor current (A) in **Pr.9 Electronic thermal O/L relay**.

Set the motor capacity and number of motor poles. **(Pr.80, Pr.81)** (Refer to page 160.)

↓ Set the motor capacity (kW) in **Pr.80 Motor capacity**, and set the number of motor poles in **Pr.81 Number of motor poles**. (V/F control is performed when the setting is "9999" (initial value).)

Set the rated motor voltage and the rated motor frequency. **(Pr.83, Pr.84)** (Refer to page 428.)

↓ Set the rated motor voltage (V) in **Pr.83 Rated motor voltage**, and set the rated motor frequency (Hz) in **Pr.84 Rated motor frequency**.

Select the control method. **(Pr.800)** (Refer to page 160.)

↓ Select **Pr.800**="10" (speed control) or "12" (speed/torque switchover) to enable speed control.

Set the operation command. (Refer to page 299.)

↓ Select the start command and speed command.

Set the torque limit. **(Pr.810)** (Refer to page 181.)

↓

Perform offline auto tuning. **(Pr.96)** (Refer to page 428.)

↓

Test run

As required

- Select online auto tuning. **(Pr.95)** (Refer to page 445.)
- Easy gain tuning (Refer to page 190.)
- Adjusting the speed control gain manually (Refer to page 191.)

REMARKS

- During Real sensorless vector control, offline auto tuning must be performed properly before starting operations.
- The speed command setting range under Real sensorless vector control is 0 to 400 Hz.
- The carrier frequency is limited during Real sensorless vector control. (Refer to page 270.)
- Torque control is not available in a low-speed (about 10 Hz or lower) regenerative range, or with a low speed and light load (about 5 Hz or lower and rated torque about 20% or lower). The vector control must be selected.
- Performing pre-excitation (LX signal and X13 signal) under torque control may start the motor running at a low speed even when the start signal (STF or STR) is not input. The motor may run also at a low speed when the speed limit value = 0 with a start command input. It must be confirmed that the motor running will not cause any safety problem before performing pre-excitation.
- Switching between the forward rotation command (STF) and reverse rotation command (STR) must not be performed during operations under torque control. An overcurrent trip (E.OC[]) or opposite rotation deceleration fault (E.11) will occur.
- When performing continuous operations under Real sensorless vector control in FR-A820-00250(3.7K) or lower or FR-A840-00126(3.7K) or lower, the speed fluctuation increases when the value is 20 Hz or less, and in the low-speed range of less than 1 Hz, there may be torque shortage.
- If starting may occur while the motor is coasting under Real sensorless vector control, the frequency search must be set for the automatic restart after instantaneous power failure function (**Pr.57** ≠ "9999", **Pr.162** = "10"). (Refer to page 511.)
- When Real sensorless vector control is applied, there may not be enough torque provided in the ultra low-speed range of about 2 Hz or lower. Generally, the speed control range is as follows.
  For power driving, 1:200 (2, 4 or 6 poles) (available at 0.3 Hz or higher when the rating is 60 Hz), 1:30 (8 or 10 poles) (available at 60 Hz or higher when the rating is 60 Hz).
  For regenerative driving, 1:12 (2 to 10 poles) (available at 5 Hz or higher when the rating is 60 Hz).

上下料機台原廠人員 購買 維修 耗材 零組件 電話： 037-466333 Email: service@repairtw.com www.repairtw.com

5.3.2 Setting procedure of vector control (speed control) Vector

Perform secure wiring.
(Refer to page 65.)

↓ Install FR-A8AP (option).

Set the applied motor and encoder.
(Pr.71, Pr.359, Pr.369) (Refer to page 68.)

↓ Set **Pr.71 Applied motor, Pr.359 Encoder rotation direction** and **Pr.369 Number of encoder pulses** according to the applied motor and encoder.

Set the overheat protection of the motor. **(Pr.9)**
(Refer to page 322.)

↓ Set the rated motor current (A) in **Pr.9 Electronic thermal O/L relay**. When using the SF-V5RU or a motor equipped with a thermal sensor, set **Pr.9** = "0A".

Set the motor capacity and number of motor poles.
(Pr.80, Pr.81) (Refer to page 160.)

↓ Set the motor capacity (kW) in **Pr.80 Motor capacity**, and set the number of motor poles in **Pr.81 Number of motor poles**. (V/F control is performed when the setting is "9999" (initial value).)

Set the rated motor voltage and the rated motor frequency.
(Pr.83, Pr.84) (Refer to page 68.)

↓ Set the rated motor voltage (V) in **Pr.83 Rated motor voltage**, and set the rated motor frequency (Hz) in **Pr.84 Rated motor frequency**.

Select the control method. **(Pr.800)** (Refer to page 160.)

↓ Select **Pr.800**="0" (speed control), "2" (speed/torque switchover) or "4" (speed/position switchover) to enable speed control.

Set the operation command. (Refer to page 299.)

↓ Select the start command and speed command.

Set the torque limit. **(Pr.810)**
(Refer to page 181.)

↓

Test run

上正科技有限公司
購買、維修 此手冊零組件
電話 037-466399
Email: service@repairtw.com
Line id: @zzzz
www.repairtw.com

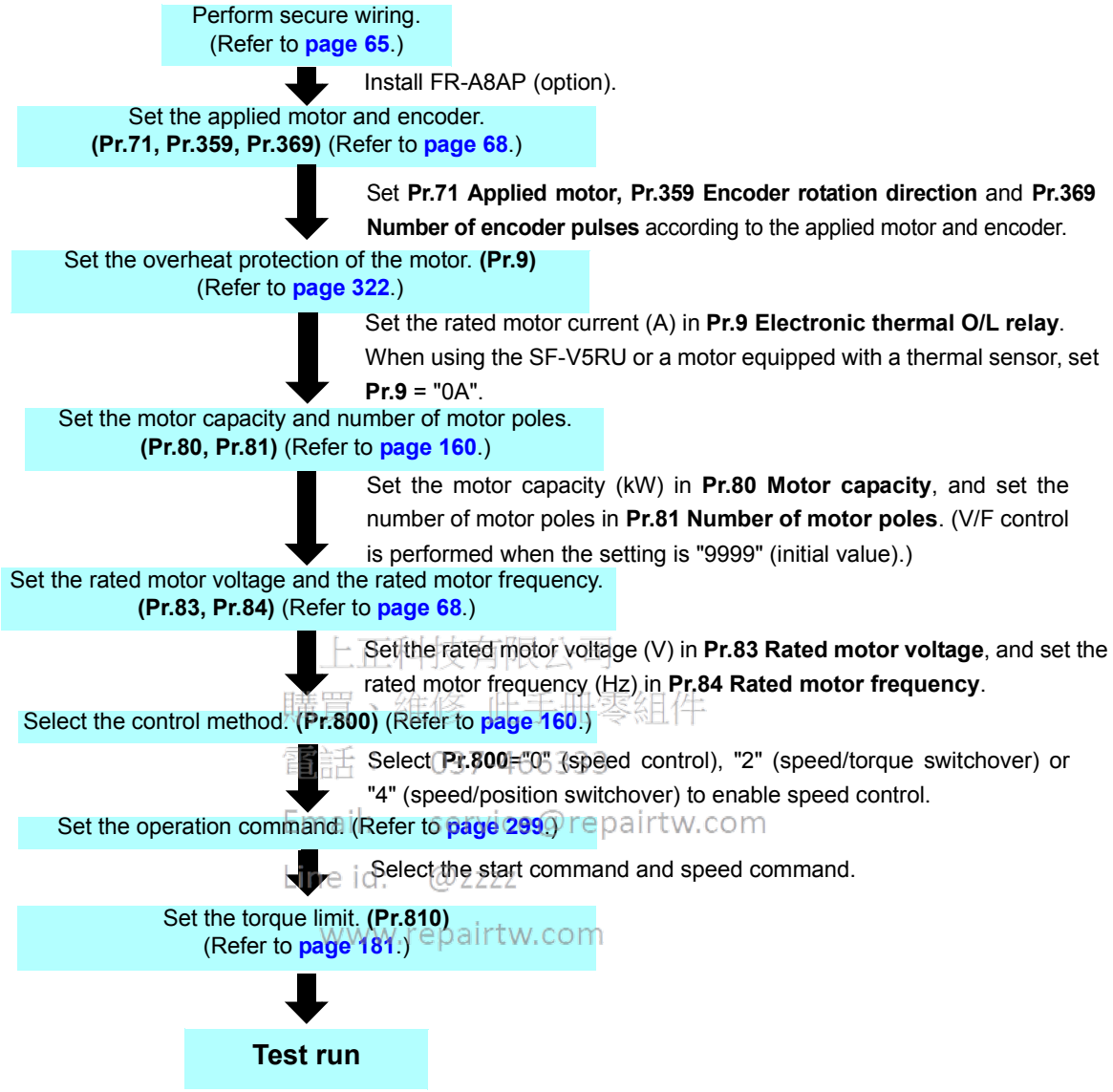

As required

- Perform offline auto tuning. **(Pr.96)** (Refer to page 428.)
- Select online auto tuning. **(Pr.95)** (Refer to page 445.)
- Easy gain tuning (Refer to page 190.)
- Adjusting the speed control gain manually (Refer to page 191.)

REMARKS

- The speed command setting range under vector control is 0 to 400 Hz.
- The carrier frequency is limited during vector control. (Refer to page 271.)

5.3.3 Setting procedure of PM sensorless vector control (speed control) PM

This inverter is set for a general-purpose motor in the initial setting. Follow the following procedure to change the setting for the PM sensorless vector control.

Driving an MM-CF IPM motor

Perform IPM parameter initialization. (Refer to page 169.)

Set "3003 or 3103" in **Pr.998 PM parameter initialization** (IPM parameter initial settings).
Setting value "3003": parameter settings for MM-CF IPM motor (rotations per minute)
Setting value "3103": parameter settings for MM-CF IPM motor (frequencies)

Driving a PM motor other than MM-CF

Set the motor. **(Pr.71, Pr.80, Pr.81, and so on)** (Refer to page 424.)

Set "8093 (IPM motor other than MM-CF)" or "9093 (SPM motor)" in **Pr.71 Applied motor**, the motor capacity (kW) in **Pr.80 Motor capacity**, and the number of poles in **Pr.81 Number of motor poles**. Refer to page 160 for other parameters. (Setting "9999 (initial value)" in **Pr.80 or Pr.81** selects V/F control.)

Perform offline auto tuning for a PM motor. **(Pr.96)** (Refer to page 438.)

Set "1" (offline auto tuning without rotating motor (for other than MM-CF)) in **Pr.96**, and perform tuning.

Configure the initial setting for the PM sensorless vector control using **Pr.998**. (Refer to page 170.)

When the setting for the PM motor is selected in **Pr.998 PM parameter initialization**, the PM sensorless vector control is selected.
[PM] on the operation panel (FR-DU08) is lit when the PM sensorless vector control is set.
"8009": Parameter (rotations per minute) settings for an IPM motor other than MM-CF
"8109": Parameter (frequency) settings for an IPM motor other than MM-CF
"9009": Parameter (rotations per minute) settings for an SPM motor
"9109": Parameter (frequency) settings for an SPM motor

Set parameters such as the acceleration/deceleration time and multi-speed setting.

Set parameters such as the acceleration/deceleration time and multi-speed setting as required.

Set the operation command. (Refer to page 299.)

Select the start command and speed command.

Test run

As required for MM-CF

- Perform offline auto tuning for a PM motor. (Refer to page 438.)

上正科技有限公司 購買、維修 此手冊零組件 電話: 0974165333 Email: service@sanpintw.com Line id: @zzzz www.sanpintw.com

REMARKS

- To change to the PM sensorless vector control, perform PM parameter initialization at first. If parameter initialization is performed after setting other parameters, some of those parameters will be initialized too. (Refer to **page 171** for the parameters that are initialized.)
- To use a motor capacity that is one rank lower than the inverter capacity, set **Pr.80 Motor capacity** before performing PM parameter initialization.
- The speed setting range for an MM-CF IPM motor is between 0 and 200 Hz.
- The carrier frequency is limited during PM sensorless vector control. (Refer to **page 270**.)
- Constant-speed operation cannot be performed in the low-speed range of 200 r/min or less under current synchronization operation. (Refer to **page 173**.)
- During PM sensorless vector control, the RUN signal is output about 100 ms after turning ON the start command (STF, STR). The delay is due to the magnetic pole detection.
- During PM sensorless vector control, the automatic restart after instantaneous power failure function operates only when an MM-CF IPM motor is connected.
  When a built-in brake or a regeneration unit is used, the frequency search may not be available at 2200 r/min or higher. The restart operation cannot be performed until the motor speed drops to a frequency where the frequency search is available.

上正科技有限公司
購買、維修 此手冊零組件
電話： 037-466333
Email: service@repairtw.com
Line id: @zzzz
www.repairtw.com

5.3.4 Setting the torque limit level under speed control Sensorless Vector PM

During speed control under Real sensorless vector control, vector control and PM sensorless vector control, the output torque is limited to prevent it from exceeding a specified value.
The torque limit level can be set in a range of 0 to 400%. The TL signal can be used to switch between two types of torque limit.
The torque limit level can be selected by setting it with a parameter, or by using analog input terminals (terminals 1, 4). Also, the torque limit levels of forward rotation (power driving/regenerative driving) and reverse rotation (power driving/regenerative driving) can be set individually.

Pr.	Name	Initial value	Setting range	Description	
22 **H500**	**Stall prevention operation level (Torque limit level)**	150/200%*1	0 to 400%	Set the torque limit level in percentage with regards to the rated torque as 100%.	
157 **M430**	**OL signal output timer**	0 s	0 to 25 s	Set the OL signal output start time at the activation of torque limit operation.	
			9999	No OL signal output	
803 **G210**	**Constant power range torque characteristic selection**	0	0	Torque rise in low-speed range	In constant-power range, constant motor output limit
			1	Constant torque in low-speed range	In constant-power range, constant torque limit
			10	Constant torque in low-speed range	In constant-power range, constant motor output limit
			11	Torque rise in low-speed range	In constant-power range, constant torque limit
810 **H700**	**Torque limit input method selection**	0	0	Internal torque limit (Torque limited by parameter settings.)	
			1	External torque limit (Torque limited by terminals 1 and 4.)	
811 **D030**	**Set resolution switchover**	0	0	Speed setting, running speed monitor increments 1 r/min	Torque limit setting increments 0.1%
			1	Speed setting, running speed monitor increments 0.1 r/min	
			10	Speed setting, running speed monitor increments 1 r/min	Torque limit setting increments 0.01%
			11	Speed setting, running speed monitor increments 0.1 r/min	
812 **H701**	**Torque limit level (regeneration)**	9999	0 to 400%	Set the torque limit level for forward rotation regenerative driving.	
			9999	Limit using **Pr.22** or the analog terminal values.	
813 **H702**	**Torque limit level (3rd quadrant)**	9999	0 to 400%	Set the torque limit level for reverse rotation power driving.	
			9999	Limit using **Pr.22** or the analog terminal values.	
814 **H703**	**Torque limit level (4th quadrant)**	9999	0 to 400%	Set the torque limit level for reverse rotation regenerative driving.	
			9999	Limit using **Pr.22** or the analog terminal values.	
815 **H710**	**Torque limit level 2**	9999	0 to 400%	When the torque limit selection (TL) signal is ON, **Pr.815** is the torque limit value regardless of **Pr.810**.	
			9999	The torque limit selected in **Pr.810** is valid.	
816 **H720**	**Torque limit level during acceleration**	9999	0 to 400%	Set the torque limit value during acceleration.	
			9999	The same torque limit as constant speed.	
817 **H721**	**Torque limit level during deceleration**	9999	0 to 400%	Set the torque limit value during deceleration.	
			9999	The same torque limit as constant speed.	
858 **T040**	**Terminal 4 function assignment**	0	0, 4, 9999	The torque limit level can be changed with setting value "4" and the signal to terminal 4.	
868 **T010**	**Terminal 1 function assignment**	0	0 to 6, 9999	The torque limit level can be changed with setting value "4" and the signal to terminal 1.	
874 **H730**	**OLT level setting**	150%	0 to 400%	A trip can be set for when the torque limit is activated and the motor stalls. Set the output at which to activate the trip.	

*1 When changing from V/F control or Advanced magnetic flux vector control to Real sensorless vector control or vector control in FR-A820-00250(3.7K) or lower or FR-A840-00126(3.7K) or lower, 150% changes to 200%.

上正科技有限公司
購買、維修 此手冊圖檔
電話： 037-466333
Email: service@repairtw.com
Line id: @zzzz
www.repairtw.com

REMARKS

- The lower limit for the torque limit level under Real sensorless vector control is set to 30% even if a value lower than 30% is set.
- When the low-speed range high-torque characteristic is disabled under PM sensorless vector control (**Pr.788**="0"), the torque limit is not activated in a low-speed range with a rated frequency of less than 10%.

(1) Block diagram of torque limit

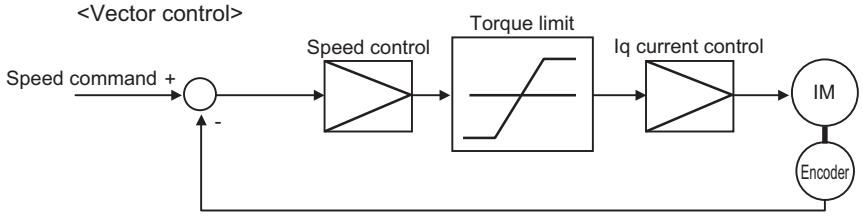

(2) Selecting the torque limit input method (Pr.810)

- Use **Pr.810 Torque limit input method selection** to select which method to use to limit the output torque during speed control.

Pr.810 setting	Torque limit input method	Operation
0 (Initial value)	Internal torque limit	Perform the torque limit operation using the parameter **(Pr.22, Pr.812 to Pr.814)** settings. If changing the torque limit parameters via communication is enabled, the torque limit input can be performed via communication.
1	External torque limit	Torque limit using analog voltage (current) to terminal 1 or terminal 4 is valid.

(3) Torque limit level using parameter settings (Pr.810 = "0", Pr.812 to Pr.814)

- In the initial value, a limit is applied to all quadrants with **Pr.22 Stall prevention operation level (Torque limit level)**.
- To set individually for each quadrant, use **Pr.812 Torque limit level (regeneration)**, **Pr.813 Torque limit level (3rd quadrant)**, **Pr.814 Torque limit level (4th quadrant)**. When "9999" is set, **Pr.22** setting is regarded as torque limit level in all the quadrants.

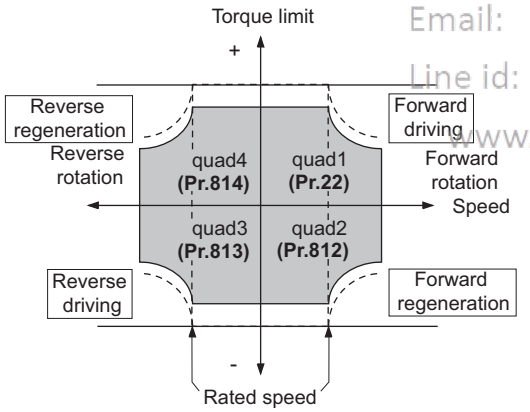

正正科技有限公司
購買、維修 此手冊零組件
電話： 037-468333
Email: service@repairtw.com
Line id: @zzzz
www.repairtw.com

(4) Torque limit level using analog input (terminals 1, 4) (Pr.810 = "1", Pr.858, Pr.868)

- The torque is limited with the analog input of terminal 1 or terminal 4.
- Torque limit using analog input is valid with a limit value lower than the internal torque limit **(Pr.22, Pr.812 to Pr.814)**. (If the torque limit using analog input exceeds the internal torque limit, the internal torque limit is valid.)
- When inputting the torque limit value from terminal 1, set **Pr.868 Terminal 1 function assignment**="4". When inputting from terminal 4, set Terminal 4 function assignment="4".
- When **Pr.858**="4" and **Pr.868**="2", the torque for regenerative driving is limited with the terminal 1 analog input, and the torque for power driving is limited with the terminal 4 analog input.

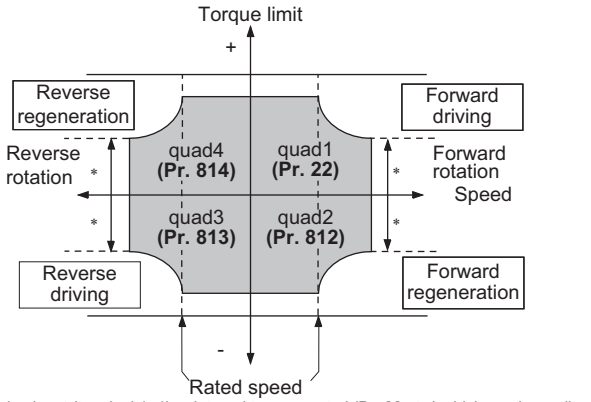

∗ Analog input (terminal 1, 4) or internal torque control (**Pr. 22** etc.) whichever is smaller

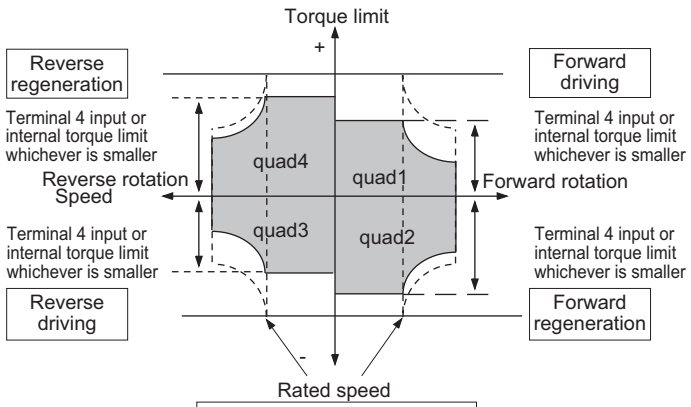

When **Pr. 858**=4, **Pr. 868**=2

- The torque limit using analog input can be corrected with **Calibration parameters C16 (Pr.919) to C19 (Pr.920), and C38 (Pr.932) to C41 (Pr.933)**. (Refer to page 406.)

上証科技有限公司
購買、維修 此手冊零組件
電話: 037-466338
Email: service@repairtw.com
Line id: @zzzz
www.repairtw.com

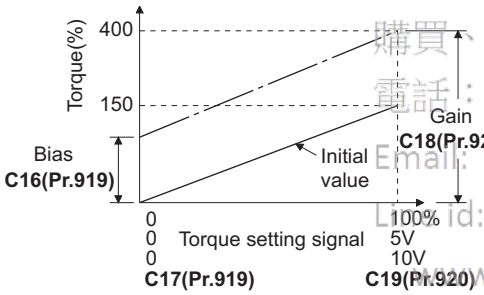

Calibration example of terminal 1

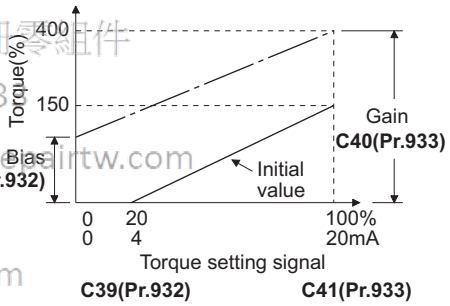

Calibration example of terminal 4

REMARKS

- When inputting an analog signal to the terminal 1, input a positive voltage (0 V to +10 V (+5 V)).
  When a negative voltage (0 V to -10 V (-5 V)) is input, the torque limit value set by the analog signal becomes "0".

Speed control under Real sensorless vector control, vector control, PM sensorless vector control

- Functions of terminals 1 and 4 by control (—: no function)

Pr.858 setting value*1	Terminal 4 function	Pr.868 setting*2	Terminal 1 function
0 (Initial value)	Speed command (AU signal-ON)	0 (Initial value)	Speed setting auxiliary
		1*4	Magnetic flux command*4
		2	—
		3	—
		4	Torque limit (**Pr.810** =1)
		5	—
		6*4	Torque bias (**Pr.840**=1 to 3)*4
		9999	—
1*4	Magnetic flux command*4	0 (Initial value)	Speed setting auxiliary
	—*3	1*4	Magnetic flux command*4
	Magnetic flux command*4	2	—
		3	—
		4	Torque limit (**Pr.810** =1)
		5	—
		6*4	Torque bias (**Pr.840**=1 to 3)*4
		9999	—
4*2	Torque limit (**Pr.810** =1)	0 (Initial value)	Speed setting auxiliary
		1*4	Magnetic flux command*4
	Power driving torque limit (**Pr.810**1)	2	Regenerative driving torque limit (**Pr.810**= 1)
	Torque limit (**Pr.810** =1)	3	—
	—*3	4	Torque limit (**Pr.810** =1)
	Torque limit (**Pr.810** =1)	5	—
		6*4	Torque bias (**Pr.840**=1 to 3)*4
		9999	—
9999	—	—	—

上正科技有限公司
購買、維修 此手冊零組件
電話： 037-466333
Email: service@repairtw.com
Line id: @zzzz
www.repairtw.com

*1 When **Pr.868** ≠ "0", the other functions of terminal 1 (auxiliary input, override function, PID control) do not operate.

*2 When **Pr.858** ≠ "0", PID control and speed commands using terminal 4 do not operate even when the AU signal is ON.

*3 When both **Pr.858** and **Pr.868** are "1" (magnetic flux command) or "4" (torque limit), the function of terminal 1 has higher priority, and terminal 4 does not function.

*4 Valid when FR-A8AP (option) is installed and vector control is selected.

(5) Second torque limit level (TL signal, Pr.815)

- For **Pr.815 Torque limit level 2**, when the Torque limit selection (TL) signal is ON, the setting value of **Pr.815** is the limit value regardless of the setting of **Pr.810 Torque limit input method selection**.
- To assign the TL signal, set "27" in any of **Pr.178 to Pr.189 (input terminal function selection)**.

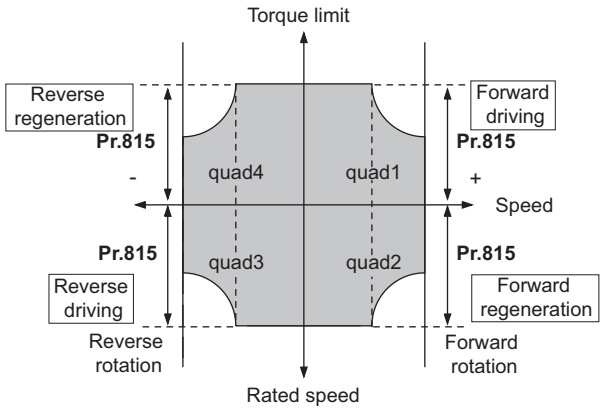

REMARKS

- Changing the terminal assignment using **Pr.178 to Pr.189 (input terminal function selection)** may affect the other functions. Set parameters after confirming the function of each terminal.

(6) Setting the torque limit values during acceleration/deceleration individually (Pr.816, Pr.817)

- The torque limit during acceleration and deceleration can be set individually.
  Torque limit using the setting values of **Pr.816 Torque limit level during acceleration** and **Pr.817 Torque limit level during deceleration** is shown below.
- If 1 s elapses while the difference between the set speed and rotation speed is within ±2 Hz, the torque limit level during acceleration/deceleration (**Pr.816** or **Pr.817**) changes to the torque control level during constant speed (**Pr.22**).
- When the difference between the set speed and rotation speed is -2 Hz or less, the torque limit level during deceleration (**Pr.817**) activates.

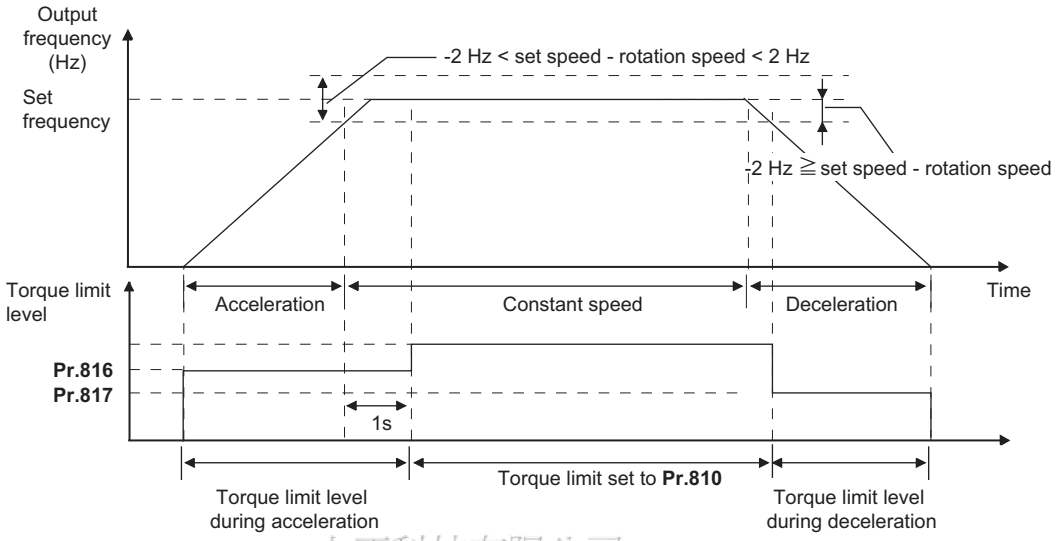

上正科技有限公司
購買、維修 此手冊零組件
電話： 037-466333
Email: service@repairtw.com
Line ID: @zzzz
www.repairtw.com

(7) Changing the setting increments of the torque limit level (Pr.811)

- The setting increments of **Pr.22 Torque limit level** and **Pr.812 to Pr.817** (torque limit level) can be changed to 0.01% by setting **Pr.811 Set resolution switchover**="10, 11".

Pr.811 setting	Speed setting, running speed monitor increments from PU, RS-485 communication, communication options*1	Torque limit setting increments Pr.22, Pr.812 to Pr.817
0	1 r/min	0.1%
1	0.1 r/min	
10	1 r/min	0.01%
11	0.1 r/min	

*1 For the change of the speed setting increments using a communication option, refer to the Instruction Manual of the communication option.

REMARKS

- The internal resolution of the torque limit is 0.024% ($100/2^{12}$), and fractions below this resolution are rounded off.
- When Real sensorless vector control is selected, fractions below a resolution equivalent to 0.1% are rounded off even if **Pr.811**="10, 11" is set.
- For details on changing the speed setting increments, refer to **page 344**.

(8) Changing the torque characteristic of the constant-output range (Pr.803)

- In torque limit operations under Real sensorless vector control or vector control, the torque characteristic in a low-speed range and constant-output range can be changed.

Pr.803 setting	Torque characteristic in low-speed range	Torque characteristic in constant-output range
0	Torque rise *1	Constant motor output
1	Constant torque	Constant torque
10	Constant torque	Constant motor output
11	Torque rise *1	Constant torque

*1 Valid only under Real sensorless vector control.

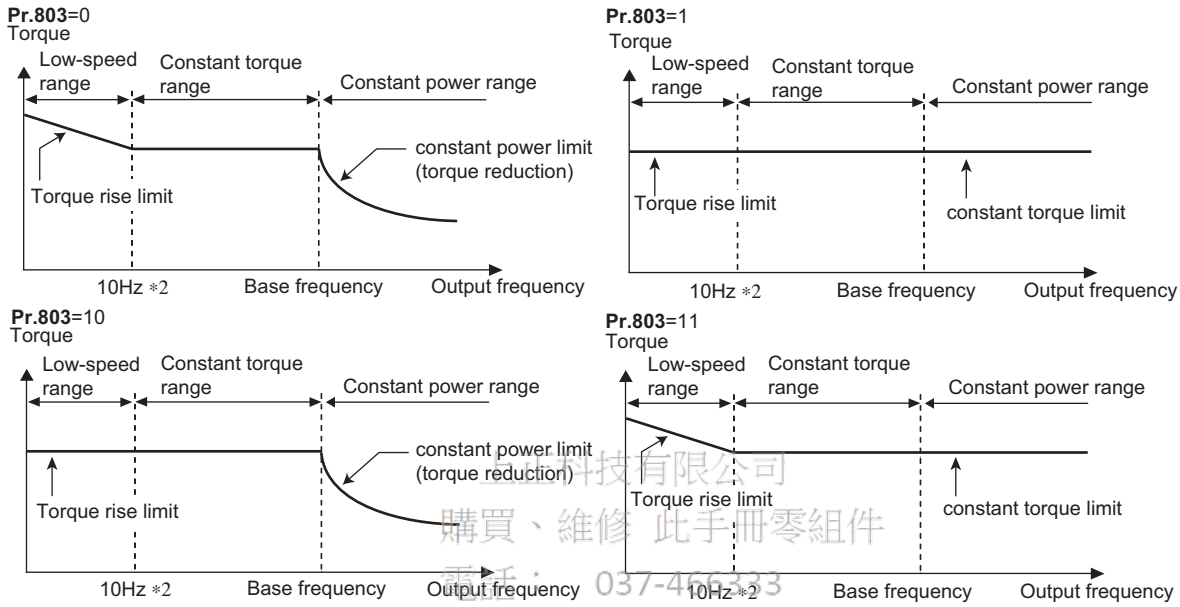

*2 Differs by the motor. (30 Hz for the SF-HR/SF-HRCA 3.7 kW to 7.5 kW, 18.5 kW, and 22 kW. 20 Hz for the 30 kW to 55 kW.)

三菱科技有限公司
購買、維修 此手冊零組件
電話： 037-466333
Email: service@repairtw.com
Line id: @zzzz
www.repairtw.com

(9) Trip during torque limit operation (Pr.874)

- A trip can be set for when the torque limit is activated and the motor stalls.
- When a high load is applied and the torque limit is activated under speed control or position control, the motor stalls. At this time, if a state where the rotation speed is lower than the value set in **Pr.865 Low speed detection** and the output torque exceeds the level set in **Pr.874 OLT level setting** continues for 3 s, Stall prevention stop (E.OLT) is activated and the inverter output is shut off.

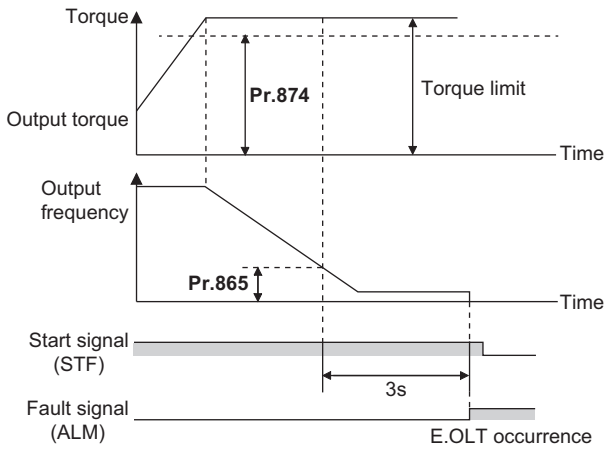

REMARKS

- Under V/F control or Advanced magnetic flux vector control, if the output frequency drops to 0.5 Hz due to the stall prevention operation and this state continues for 3 s, a fault indication (E.OLT) appears, and the inverter output is shut off. This operation is activated regardless of the **Pr.874** setting.
- This fault does not occur under torque control.

(10) Adjusting the stall prevention operation signal and output timing (OL signal, Pr.157)

- If the output torque exceeds the torque limit level and the torque limit is activated, the stall prevention operation signal (OL signal) is turned ON for 100 ms or longer. When the output torque drops to the torque limit level or lower, the output signal also turns OFF.
- **Pr.157 OL signal output timer** can be used to set whether to output the OL signal immediately, or whether to output it after a certain time period has elapsed.

Pr.157 setting	Description
0 (Initial value)	Output immediately.
0.1 to 25	Output after the set time (s).
9999	Not output.

- The OL signal is also output during the regeneration avoidance operation oL (overvoltage stall).

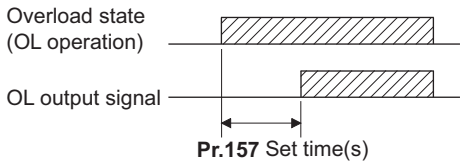

REMARKS

- OL signal is assigned to the terminal OL in the initial setting. The OL signal can also be assigned to other terminals by setting "3 (positive logic) or 103 (negative logic)" in any of **Pr.190 to Pr.196 (output terminal function selection)**.
- Changing the terminal assignment using **Pr.190 to Pr.196 (output terminal function selection)** may affect the other functions. Set parameters after confirming the function of each terminal.

上正科技有限公司
購買、維修 此手冊零組件
電話： 037-466333
Email: service@repairtw.com
Line id: @zzzz
www.repairtw.com

♦ Parameters referred to ♦

Pr.22 Stall prevention operation level ☞ page 336
Pr.178 to Pr.189 (input terminal function selection) ☞ page 416
Pr.190 to Pr.196 (output terminal function selection) ☞ page 370
Pr.840 Torque bias selection ☞ page 198
Pr.865 Low speed detection ☞ page 378

5.3.5 Performing high-accuracy, fast-response control (gain adjustment for Real sensorless vector control, vector control and PM sensorless vector control) Sensorless Vector PM

The load inertia ratio (load moment of inertia) for the motor is calculated in real time from the torque command and rotation speed during motor driving by the vector control. Because the optimum gain for speed control and position control is set automatically from the load inertia ratio and the response level, the work required for gain adjustment is reduced. (Easy gain tuning)
If the load inertia ratio cannot be calculated due to load fluctuations, or under Real sensorless vector control or PM sensorless vector control, the control gain can be set automatically by entering the load inertia ratio manually.
Manual gain adjustment is useful for achieving optimum machine performance or improving unfavorable conditions, such as vibration and acoustic noise during operation with high load inertia or gear backlash.

Pr.	Name	Initial value	Setting range	Description
818 C112	Easy gain tuning response level setting	2	1 to 15	Set the response level. 1 (slow-response) to 15 (fast-response)
819 C113	Easy gain tuning selection	0	0	No easy gain tuning
			1	Gain is calculated with load calculation (This function is valid under vector control.)
			2	Gain is calculated with load **(Pr.880)** manual input
820 G211	Speed control P gain 1	60%	0 to 1000%	The proportional gain during speed control is set. (Setting this parameter higher improves the trackability for speed command changes. It also reduces the speed fluctuation caused by external disturbance.)
821 G212	Speed control integral time 1	0.333 s	0 to 20 s	The integral time during speed control is set. (Setting this parameter lower shortens the return time to the original speed when the speed fluctuates due to external disturbance.)
830 G311	Speed control P gain 2	9999	0 to 1000%	Second function of **Pr.820** (valid when RT signal is ON)
			9999	The **Pr.820** setting is applied to the operation.
831 G312	Speed control integral time 2	9999	0 to 20 s	Second function of **Pr.821** (valid when RT signal is ON)
			9999	The **Pr.821** setting is applied to the operation.
880 C114	Load inertia ratio	7-fold	0 to 200-fold	Set the load inertia ratio for the motor.
1115 G218	Speed control integral term clear time	0 ms	0 to 9998 ms	Set time until the integral term is reduced and cleared after P control switching.
1116 G206	Constant output range speed control P gain compensation	0%	0 to 100%	Set a compensation amount of the speed control P gain in the constant output range (rated speed or higher).
1117 G261	Speed control P gain 1 (per-unit system)	9999	0 to 300	Set a proportional gain under speed control in the per-unit system.
			9999	The **Pr.820** setting is applied to the operation.
1118 G361	Speed control P gain 2 (per-unit system)	9999	0 to 300	Second function of **Pr.1117** (valid when RT signal ON)
			9999	The **Pr.1117** setting is applied to the operation.
1121 G260	Per-unit speed control reference frequency	120 Hz*1	0 to 400 Hz	Set the speed at 100% when setting speed control P gain or model speed control gain in the per-unit system.
		60 Hz*2		

*1 The value for the FR-A820-03160(55K) or lower and FR-A840-01800(55K) or lower.
*2 The value for the FR-A820-03800(75K) or higher and FR-A840-02160(75K) or higher.

上正科技有限公司
購買、維修此手冊設備請
電話：037-466133
Email: service@repairtw.com
Line id: @zzzz
www.repairtw.com

Speed control under Real sensorless vector control, vector control, PM sensorless vector control

(1) Block diagram of easy gain tuning function

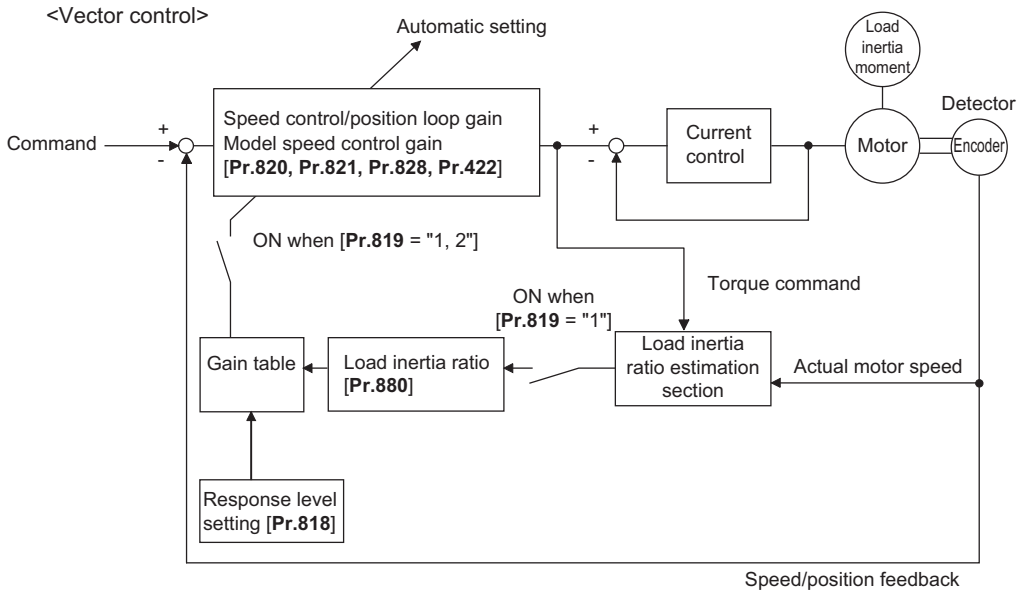

REMARKS

- Easy gain tuning is valid for the first motor. When applying the second motor (RT signal is ON), tuning is not performed.

(2) Execution procedure for easy gain tuning (Pr.819 = "1" Load inertia ratio automatic calculation)

上正科技有限公司
購買、維修、此手冊零組件
電話： 037-466333
Email: service@repairtw.com
Line id: @zzzz
www.repairtw.com

Easy gain tuning (load inertia ratio automatic calculation) is only valid in the speed control and position control modes of vector control. It is invalid under torque control, V/F control, Advanced magnetic flux vector control, Real sensorless vector control, and PM sensorless vector control.

1) Set the response level in **Pr.818 Easy gain tuning response level setting**.

Pr. 818 setting	1	2	3	4	5	6	7	8	9	10	11	12	13	14	15
Response level	Slow response							Middle response							Fast response
Guideline of mechanical resonance frequency (Hz)	8	10	12	15	18	22	28	34	42	52	64	79	98	122	150
Inverter application	Large conveyor; General machine tool, conveyor; Arm robot; Precision machine tool														

2) The load inertia ratio is calculated during acceleration/deceleration, and from this value and the value of **Pr.818 Easy gain tuning response level setting**, the gain for each control is set automatically. **Pr.880 Load inertia ratio** is used as the initial value of the load inertia ratio when performing tuning. During tuning, the calculated value is set in **Pr.880**.
The calculation of the load inertia ratio may take excessive time or otherwise not be performed properly if the following conditions are not satisfied.
•The time in acceleration/deceleration driving until 1500 r/min is reached in 5 s or less.
•The rotation speed in driving is 150 r/min or higher.
•The acceleration/deceleration torque is 10% or higher.
•No sudden external disturbances during acceleration/deceleration.
•The load inertia ratio is about 30-fold or lower.
•No gear backlash or belt sagging.

3) Press FWD or REV to calculate the continuous load inertia ratio, or calculate the gain.
(The operation command during External operation is the STF or STR signal.)

(3) Execution procedure for easy gain tuning (Pr.819 = "2" Load inertia ratio manual input)

Easy gain tuning (load inertia ratio manual input) is valid in the speed control mode under Real sensorless vector control, the speed control and position control modes under vector control, and the speed control mode under PM sensorless vector control.

1) Set the load inertia ratio for the motor in **Pr.880 Load inertia ratio**.
2) Set "2" (easy gain tuning enabled) in **Pr.819 Easy gain tuning selection**. When set, **Pr.820 Speed control P gain 1** and **Pr.821 Speed control integral time 1** are set automatically.
   Operation is performed with the adjusted gain from the next operation.
3) Perform a test run, and set the response level in **Pr.818 Easy gain tuning response level setting**. Setting this parameter higher improves the trackability for commands, but setting it too high causes vibration. (The response level can be adjusted during operation when **Pr.77 Parameter write selection** ="2" (parameters can be written during operation).)

REMARKS

- When **Pr.819**="1, 2" is set, even if the **Pr.819** setting value is returned to "0" after tuning is performed, the data that was set in each parameter is retained in the tuning results.
- If good precision cannot be obtained even after executing easy gain tuning, because of external disturbances or other reasons, perform fine adjustment manually. At this time, set the setting value of **Pr.819** to "0" (no easy gain tuning).

(4) Parameters set automatically by easy gain tuning

The following table shows the relationship between the easy gain tuning function and gain adjustment parameters.

	Easy gain tuning selection (Pr.819) setting		
	0	**1**	**2**
Pr.880 Load inertia ratio	Manual input	a) The inertia calculation result (RAM) using easy gain tuning is displayed. b) The parameter is set at the following times. • Every hour after turning ON the power • When **Pr.819** is set to a value other than "1" • After changing to a control other than vector control (such as V/F control) using **Pr.800** c) Write (manual input) is available only during a stop.	Manual input
Pr.820 Speed control P gain 1 **Pr.821 Speed control integral time 1** **Pr.828 Model speed control gain** **Pr.422 Position control gain** **Pr.446 Model position control gain**	Manual input	a) The tuning result (RAM) is displayed. b) The parameter is set at the following times. • Every hour after turning ON the power • When **Pr.819** is set to a value other than "1" • After changing to a control other than vector control (such as V/F control) using **Pr.800** c) Write (manual input) is not available	a) Gain is calculated when **Pr.819** is set to "2", and the result is set in the parameter. b) When read, the tuning result (parameter setting value) is displayed. c) Write (manual input) is not available

上正科技有限公司
購買、維修 此手冊零組件
電話： 037-466333
Email: service@repairtw.com
Line id: @zzzz
www.repairtw.com

REMARKS

- If easy gain tuning is executed at an inertia equal to or higher than the specified value under vector control, a fault such as hunting may occur. Also, if the motor shaft is fixed by the servo lock or position control, the bearing may be damaged. In this case, do not perform easy gain tuning. Adjust the gain manually.
- The load inertia ratio is only calculated under vector control.

(5) Adjusting the speed control gain manually (Pr.819 = "0" No easy gain tuning)

- The speed control gain can be adjusted for the conditions such as abnormal machine vibration, acoustic noise, slow response, and overshoot.
- **Pr.820 Speed control P gain 1**="60% (initial value)" is equivalent to 120 rad/s (speed response of a single motor). (Equivalent to the half the rad/s value during Real sensorless vector control or with the FR-A820-03800(75K) or higher and FR-A840-02160(75K) or higher during vector control.) Setting this parameter higher speeds up the response, but setting this too high causes vibration and acoustic noise.
- Setting **Pr.821 Speed control integral time 1** lower shortens the return time to the original speed during speed fluctuation, but setting it too low causes overshoot.

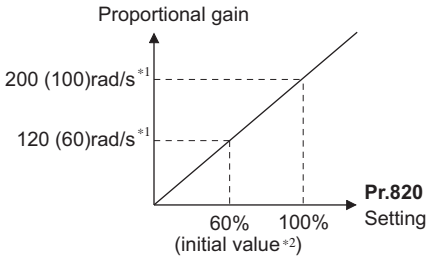

*1 The value in parentheses is applicable during Real sensorless vector control or with the FR-A820-03800(75K) or higher and FR-A840-02160(75K) or higher during vector control.

*2 Performing PM parameter initialization changes the settings. (Refer to page 170.)

- Actual speed gain is calculated as below when load inertia is applied.

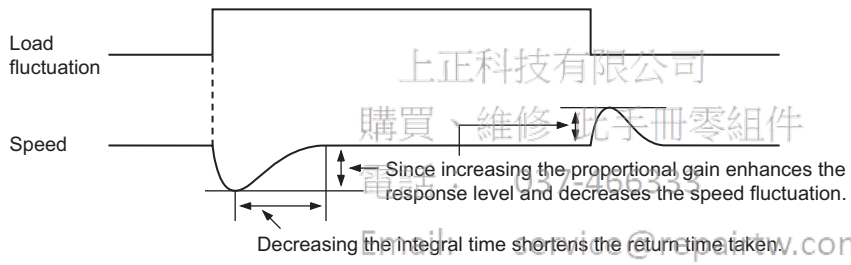

上正科技有限公司
購買、維修 此手冊零組件
電話: 937-466333
Email: service@repairtw.com
Line id: @zzzz
www.repairtw.com

$$\text{Actual speed gain} = \text{Speed gain of a single motor} \times \frac{JM}{JM + JL}$$

JM: Motor inertia
JL: Load inertia converted as the motor axis inertia

- Adjust in the following procedure:

1) Change the **Pr.820** setting while checking the conditions.
2) If it cannot be adjusted well, change **Pr.821** setting, and perform 1) again.

No.	Movement / condition	Adjustment method	
1	Load inertia is high.	Set **Pr.820** and **Pr.821** higher.	
		Pr.820	If acceleration is slow, raise the setting by 10%s and then set the value to 0.8 to 0.9 × the setting immediately before vibration/noise starts occurring.
		Pr.821	If overshoots occur, raise the setting by double the setting and then set the value to 0.8 to 0.9 × the setting where overshoots stop occurring.
2	Vibration or acoustic noise are generated from machines.	Set **Pr.820** lower and **Pr.821** higher.	
		Pr.820	Lower the setting by 10%s and then set the value to 0.8 to 0.9 × the setting immediately before vibration/noise starts occurring.
		Pr.821	If overshoots occur, raise the setting by double the setting and then set the value to 0.8 to 0.9 × the setting where overshoots stop occurring.
3	Response is slow.	Set **Pr.820** higher.	
		Pr.820	If acceleration is slow, raise the setting by 5%s and then set the value to 0.8 to 0.9 × the setting immediately before vibration/noise starts occurring.
4	Return time (response time) is long.	Set **Pr.821** lower.	
		Lower **Pr.821** by half the current setting and then set the value to 0.8 to 0.9 × the setting immediately before overshoots or unstable movements stop occurring.	
5	Overshoots or unstable movements occur.	Set **Pr.821** higher.	
		Raise **Pr.821** by double the current setting and then set the value to 0.8 to 0.9 × the setting immediately before overshoots or unstable movements stop occurring.	

REMARKS

- When adjusting the gain manually, set **Pr.819 Easy gain tuning selection** to "0" (no easy gain tuning) (initial value).
- **Pr.830 Speed control P gain 2** and **Pr.831 Speed control integral time 2** are valid when terminal RT is ON. In this case, replace them for **Pr.820** and **Pr.821** in the description above.

(6) When using a multi-pole motor (8 poles or more)

- If the motor inertia is known, set **Pr.707 Motor inertia (integer)** and **Pr.724 Motor inertia (exponent)**. (Refer to page 428.)
- Under Real sensorless vector control or vector control, adjust **Pr.820 Speed control P gain 1** and **Pr.824 Torque control P gain 1 (current loop proportional gain)** to suit the motor, by referring to the following methods.
- Setting the parameter of **Pr.820 Speed control P gain 1** higher speeds up the response, but setting this too high causes vibration and acoustic noise.
- Setting the parameter of **Pr.824 Torque control P gain 1 (current loop proportional gain)** too low causes current ripple, and a noise synchronous with this will be emitted from the motor.
- Adjustment method:

No.	Movement / condition	Adjustment method
1	Motor rotation speed in the low-speed range is unstable.	**Pr.820 Speed control P gain 1** must be set higher according to the motor inertia. For multi-pole motors, because the inertia of the motor itself tends to be large, first perform broad adjustment to improve the unstable movements, and then perform fine adjustment by referring to the response level based on this setting. Also, for vector control, gain adjustment appropriate for the inertia can be easily performed by using easy gain tuning (**Pr.819**=1).
2	Rotation speed trackability is poor.	Set **Pr.820 Speed control P gain 1** higher. Raise the setting by 10%s and set a value that satisfies the following condition: The setting immediately before vibration/noise starts occurring × 0.8 to 0.9. If it cannot be adjusted well, double **Pr.821 Speed control integral time 1** and perform the adjustment of **Pr.820** again.
3	Large fluctuation of the rotation speed relative to load fluctuation.	
4	Torque shortage or motor backlash occurs when starting or passing a low-speed range under Real sensorless vector control.	Set the speed control gain higher. (The same as No.1.) If this cannot be prevented through gain adjustment, raise **Pr.13 Starting frequency** for a fault that occurs when starting, or shorten the acceleration time and avoid continuous operation in a low-speed range.
5	Unusual vibration, noise and overcurrent of the motor or machine occurs.	Set **Pr.824 Torque control P gain 1 (current loop proportional gain)** lower. Lower the setting by 10%s and set a value that satisfies the following condition: The setting immediately before the condition improves × 0.8 to 0.9.
6	Overcurrent or overspeed (E.OS) occurs when starting under Real sensorless vector control.	

(7) Compensating the speed control P gain in the constant output range (Pr.1116)

- In the constant output range (rated speed or higher), the response of speed control is reduced due to weak field. Thus, the speed control P gain is needed to be compensated using **Pr.1116 Constant output range speed control P gain compensation**.
- In **Pr.1116**, set a compensation amount for the doubled rated speed regarding the speed control P gain at the rated speed or lower as 100%.
  (Speed control P gain at rated speed or higher) = (Speed control P gain at rated speed or lower) × (100% + compensation amount)
  Compensation amount = **Pr.1116** / Rated speed × (Speed - Rated speed)

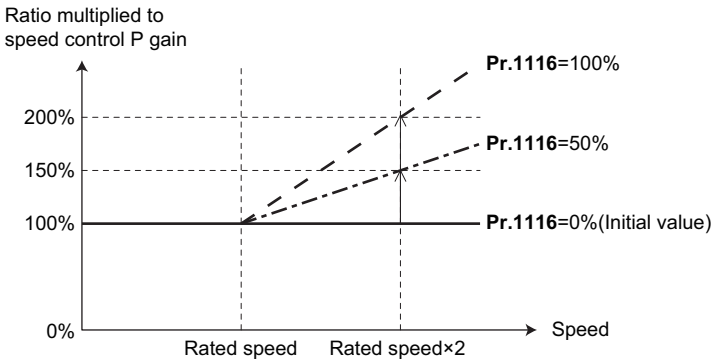

(8) Setting the speed control P gain in the per-unit system (Pr.1117, Pr.1118, Pr.1121)

- The speed control P gain can be set in the per-unit (pu) system.
- In the per-unit system:
  When "1" is set, the torque (Iq) command is 100% (rated Iq) at the 100% speed deviation.
  When "10" is set, the torque (Iq) command is 10% (rated Iq) at the 10% speed deviation.
  Set the 100% speed in **Pr.1121 Per-unit speed control reference frequency**.
- The speed control P gain becomes as follows according to **Pr.1117 Speed control P gain 1 (per-unit system)**, **Pr.1118 Speed control P gain 2 (per-unit system)**, and the RT signal.

Pr.1117	Pr.1118	Pr.830	RT signal	Speed control P gain
9999	9999	—	OFF	**Pr.820**
		9999	ON	**Pr.820**
		Other than 9999	ON	**Pr.830**
Other than 9999	9999	—	—	**Pr.1117**
9999	Other than 9999	—	OFF	**Pr.820**
			ON	**Pr.1118**
Other than 9999	Other than 9999	—	OFF	**Pr.1117**
			ON	**Pr.1118**

REMARKS

- The per-unit system setting is available only under Real sensorless vector control or vector control.
- When the speed control P gain or model speed control gain is set in the per-unit system, the easy gain tuning selection (**Pr.819**="1 or 2") becomes invalid.

(9) Switching over P/PI control (Pr.1115, X44 signal)

- In speed control under Real sensorless vector control or vector control, whether or not to add the integral time (I) when performing gain adjustment with P gain and integral time can be performed with the P/PI control switchover signal (X44).
  When X44 signal is OFF..... PI control
  When X44 signal is ON..... P control
- To input the X44 signal, set "44" in any of **Pr.178 to Pr.189 (input terminal function selection)** to assign the function to a terminal.
- When the X44 signal is turned ON, integration is stopped and the accumulated integral term is reduced and cleared according to **Pr.1115 Speed control integral term clear time**. Shock at P/PI control switchover is absorbed.
  In **Pr.1115**, set time when the integral term is reduced from 100% to 0% regarding the rated torque current (Iq) as 100%.
  Turning OFF the X44 signal resumes the integral operation.

[Function block diagram]

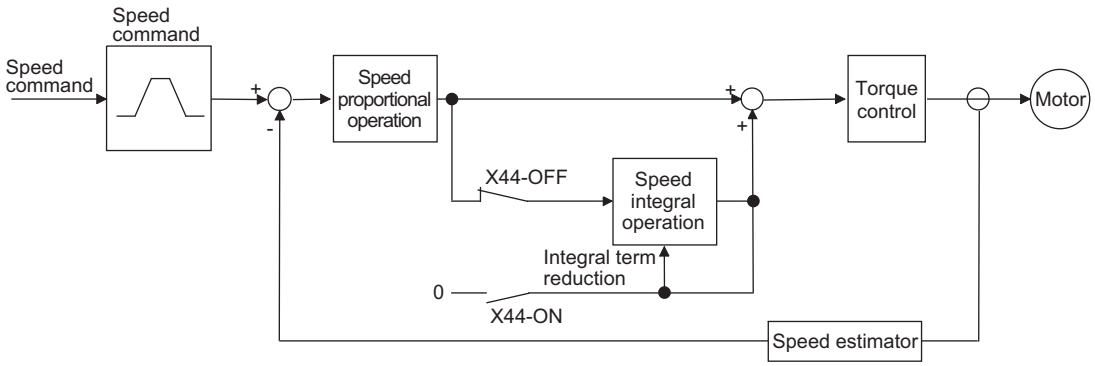

REMARKS

- Changing the terminal assignment using **Pr.178 to Pr.189 (input terminal function selection)** may affect the other functions. Set parameters after confirming the function of each terminal.

工正科技有限公司 購買、維修 此主机零组件 電話：037-466333 Email: service@repairtw.com Line id: @zzzz www.repairtw.com

5.3.6 Troubleshooting in the speed control

Sensorless Vector PM

No.	Condition	Cause	Countermeasure
1	The motor does not rotate. (Vector control)	• Motor wiring is incorrect.	• Check the wiring. Set V/F control (set **Pr.80 Motor capacity** or **Pr.81 Number of motor poles** to "9999") and check the motor rotation direction. For SF-V5RU (1500 r/min series), set **Pr.19 Base frequency voltage** to "170 V (340 V)" when the value is 3.7 kW or lower, and set it to "160 V (320 V)" when the value is higher, and set **Pr.3 Base frequency** to "50 Hz". 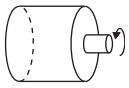 When a forward signal is input, rotation in the counterclockwise direction as viewed from the motor shaft direction is correct. (Clockwise rotation means that the phase sequence of the inverter secondary side wiring is different.)
		• Encoder type selection switch (FR-A8AP (option)) is incorrect.	• Check the encoder specifications. Check the encoder type selection switch of differential/complementary (FR-A8AP (option)).
		• Wiring of encoder is incorrect.	• When using the system where the motor shaft can be rotated by an external force other than the motor without any safety troubles, rotate the motor counterclockwise and check if FWD is indicated. If REV is indicated, the phase sequence of the encoder is incorrect. Check the wiring, and set **Pr.359 Encoder rotation direction** in accordance with the motor specification. (Refer to **page 62**.) If the clockwise direction is forward as viewed from the motor shaft side, set **Pr.359**="0". If the counterclockwise direction is forward as viewed from the motor shaft side, set **Pr.359**="1".
		• The setting of **Pr.369 Number of encoder pulses** and the number of encoder pulses used are different.	• If the parameter setting value is lower than the number of encoder pulses used, the motor will not rotate. Set **Pr.369** correctly.
		• Encoder power specifications are incorrect. Alternatively, power is not input.	• Check the encoder power specifications (5 V/12 V/15 V/24 V), and input the external power supply. When the encoder output is the differential line driver type, only 5 V can be input. Make the voltage of the external power supply the same as the encoder output voltage, and connect the external power supply between PG and SD.
2	Motor does not run at the correct speed. (Command speed and actual speed differ.)	• Speed command from the controller is different from the actual speed. The speed command is affected by noise.	• Check that the speed command sent from the controller is correct. (Take EMC measures.) • Set **Pr.72 PWM frequency selection** lower.
		• The command speed and the speed recognized by the inverter are different.	• Adjust the bias and gain **(Pr.125, Pr.126, C2 to C7, C12 to C15)** of the speed command again.
		• The setting for the number of encoder pulses is incorrect.	• Check the setting of **Pr.369 Number of encoder pulses**. (Vector control)
3	The speed does not accelerate to the command speed.	• Torque shortage. The torque limit is operating.	• Raise the torque limit. (Refer to the torque limit for speed control on **page 181**.) • Increase the capacity.
		• Only P (proportional) control is performed.	• Speed deviation occurs under P (proportional) control when the load is heavy. Select PI control.

上正科技有限公司
購買、維修 此手冊零組件
電話： 037-466333
Email: service@repairtw.com
Line id: @zzzz
www.repairtw.com

Speed control under Real sensorless vector control, vector control, PM sensorless vector control

No.	Condition	Cause	Countermeasure
4	Motor speed fluctuates.	• Speed command varies.	• Check that the speed command sent from the controller is correct. (Take EMC measures.) • Set **Pr.72 PWM frequency selection** lower. • Set **Pr.822 Speed setting filter 1** higher. (page 398)
		• Torque shortage.	• Raise the torque limit. (Refer to the torque limit for speed control on page 181.)
		• Speed control gain is not suitable for the machine. (Resonance occurs.)	• Perform easy gain tuning. • Adjust **Pr.820 Speed control P gain 1** and **Pr.821 Speed control integral time 1**. • Perform speed feed forward control or model adaptive speed control.
5	Hunting (vibration or acoustic noise) occurs in the motor or the machine.	• Speed control gain is too high.	• Perform easy gain tuning. • Set **Pr.820 Speed control P gain 1** lower and **Pr.821 Speed control integral time 1** higher. • Perform speed feed forward control or model adaptive speed control.
		• Torque control gain is too high.	• Set **Pr.824 Torque control P gain 1 (current loop proportional gain)** lower.
		• Motor wiring is incorrect.	• Check the wiring.
6	Acceleration/ deceleration time is different from the setting.	• Torque shortage.	• Raise the torque limit. (Refer to the torque limit for speed control on page 181.) • Perform speed feed forward control.
		• Load inertia is too high.	• Set acceleration/deceleration time suitable for the load.
7	Machine movement is unstable.	• Speed control gain is not suitable for the machine.	• Perform easy gain tuning. • Adjust **Pr.820** and **Pr.821**. • Perform speed feed forward control or model adaptive speed control.
		• Response is slow because of the inverter's acceleration/deceleration time setting.	• Set the optimum acceleration/deceleration time.
8	Rotation ripple occurs during the low-speed operation.	• High carrier frequency is affecting the motor rotation.	• Set **Pr.72 PWM frequency selection** lower.
		• Speed control gain is too low.	• Set **Pr.820 Speed control P gain 1** higher.

上正科技有限公司
購買 維修 此手冊零組件
電話: 037-466333
Email: service@repairtw.com
Line id: @z222
www.repairtw.com

♦ Parameters referred to ♦

Pr.3 Base frequency, Pr.19 Base frequency voltage ☞ page 578

Pr.72 PWM frequency selection ☞ page 270

Pr.80 Motor capacity, Pr.81 Number of motor poles ☞ page 160

Pr.125 Terminal 2 frequency setting gain frequency, Pr.126 Terminal 4 frequency setting gain frequency ☞ page 400

Pr.359 Encoder rotation direction, Pr.369 Number of encoder pulses ☞ page 62

Pr.822 Speed setting filter 1 ☞ page 398

Pr.824 Torque control P gain 1 (current loop proportional gain) ☞ page 219

5.3.7 Speed feed forward control and model adaptive speed control Sensorless Vector PM

- Speed feed forward control or model adaptive speed control can be selected using parameter settings.
  Under speed feed forward control, the motor trackability for speed command changes can be improved.
  Under model adaptive speed control, the speed trackability and the response level to motor external disturbance torque can be adjusted individually.

Pr.	Name	Initial value	Setting range	Description
828 G224	**Model speed control gain**	60%	0 to 1000%	Set the gain for the model speed controller.
877 G220	**Speed feed forward control/model adaptive speed control selection**	0	0	Perform normal speed control.
			1	Perform speed feed forward control.
			2	Model adaptive speed control becomes valid.
878 G221	**Speed feed forward filter**	0 s	0 to 1 s	Set the primary delay filter for the result of the speed feed forward calculated from the speed command and load inertia ratio.
879 G222	**Speed feed forward torque limit**	150%	0 to 400%	Set a maximum limit for the speed feed forward torque.
880 C114	**Load inertia ratio**	7-fold	0 to 200-fold	Set the load inertia ratio for the motor.
881 G223	**Speed feed forward gain**	0%	0 to 1000%	Set the calculation result for speed feed forward as the gain.
1119 G262	**Model speed control gain (per-unit system)**	9999	0 to 300	Set the gain for the model speed controller in the per-unit system.
			9999	The **Pr.828** setting is applied to the operation.
1121 G260	**Per-unit speed control reference frequency**	120 Hz*1	0 to 400 Hz	Set the speed at 100% when setting speed control P gain or model speed control gain in the per-unit system.
		60 Hz*2		

*1 The value for the FR-A820-03160(55K) or lower and FR-A840-01800(55K) or lower.
*2 The value for the FR-A820-03800(75K) or higher and FR-A840-02160(75K) or higher.

上正科技有限公司
購買、維修 此手冊零組件
電話： 037-466333
Email: service@repairtw.com
Line id: @zzz
www.repairtw.com

POINT

When using model adaptive speed control, use the data obtained from the easy gain tuning for **Pr.828 Model speed control gain** setting. Make the setting with easy gain tuning (at the same time). (Refer to page 188.)

(1) Speed feed forward control (Pr.877 = "1")

- When the load inertia ratio is set in **Pr.880**, the required torque for the set inertia is calculated according to the acceleration and deceleration commands, and the torque is generated quickly.
- When the speed feed forward gain is 100%, the calculation result for speed feed forward is applied as is.
- If the speed command changes suddenly, the torque is increased by the speed feed forward calculation. The maximum limit for the speed feed forward torque is set in **Pr.879**.
- The speed feed forward result can also be lessened with a primary delay filter in **Pr.878**.

[Block diagram]

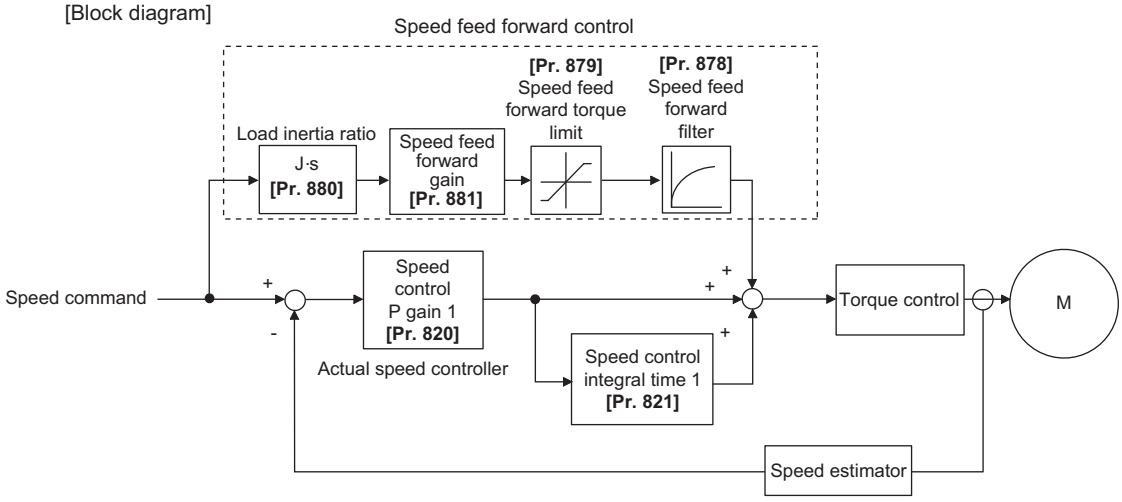

REMARKS

- The speed feed forward control is enabled for the first motor.
- Even if the driven motor is switched to the second motor while **Pr.877**= "1", the second motor is operated as **Pr.877**="0".
- Under PM sensorless vector control, this function is available when low-speed range high-torque characteristic is enabled by **Pr.788 Low speed range torque characteristic selection**="9999 (initial value)". (Refer to page 173.)

(2) Model adaptive speed control (Pr.877 = "2", Pr.828, Pr.1119)

- The model speed of the motor is calculated, and the feedback is applied to the speed controller on the model side. Also, this model speed is set as the command of the actual speed controller.
- The inertia ratio of **Pr.880** is used when the speed controller on the model side calculates the torque current command value.
- The torque current command of the speed controller on the model side is added to the output of the actual speed controller, and set as the input of the iq current control.
  Pr.828 is used for the speed control on the model side (P control), and first gain **Pr.820** is used for the actual speed controller.
- The model speed control gain can be set in the per-unit (pu) system in **Pr.1119**.
- In the per-unit system:
  When "1" is set, the torque (Iq) command is 100% (rated Iq) at the 100% speed deviation.
  When "10" is set, the torque (Iq) command is 10% (rated Iq) at the 10% speed deviation.
  Set the 100% speed in **Pr.1121 Per-unit speed control reference frequency**.

[Block diagram]

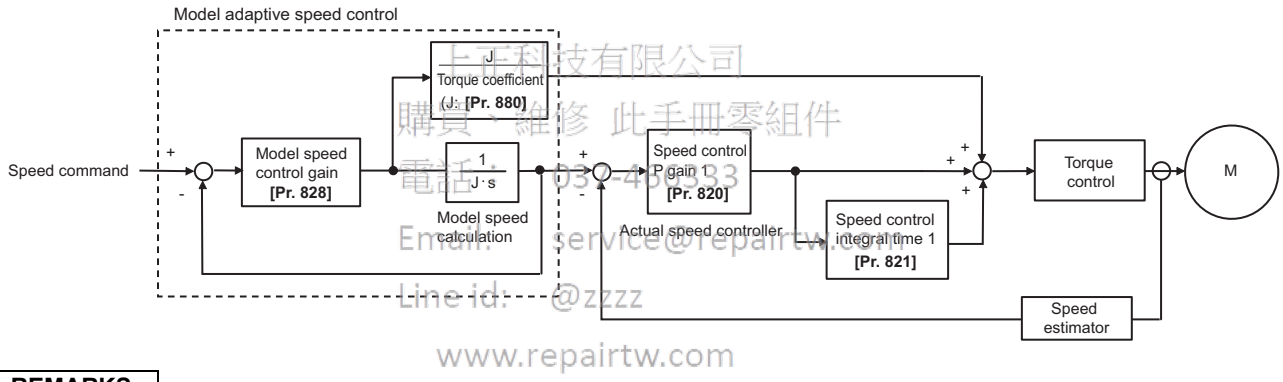

上正科技有限公司
購買、維修 此手冊零組件
電話: 03-4603333
Email: service@repairtw.com
Line id: @zzzz
www.repairtw.com

REMARKS

- The model adaptive speed control is enabled for the first motor.
- Even if the driven motor is switched to the second motor while **Pr.877** ="2", the second motor is operated as **Pr.877** ="0".
- Under PM sensorless vector control, the notch filter is available when low-speed range high-torque characteristic is enabled by **Pr.788 Low speed range torque characteristic selection**="9999 (initial value)". (Refer to page 173.)
- Under model adaptive speed control, because the appropriate gain values for the model and actual loop sections are based on the response that was set for easy gain tuning, when raising the response level, **Pr.818 Easy gain tuning response level setting** must be re-evaluated (raised).

(3) Combining with easy gain tuning

- The following table shows the relationship between speed feed forward and model adaptive speed control, and the easy gain tuning function.

	Easy gain tuning selection (Pr.819) setting		
	0	1	2
Pr.880 Load inertia ratio	Manual input	The inertia ratio value calculated by easy gain tuning is displayed. Manual input is available only during a stop.	Manual input
Pr.820 Speed control P gain 1	Manual input	The tuning result is displayed. Write is not available.	The tuning result is displayed. Write is not available.
Pr.821 Speed control integral time 1	Manual input	The tuning result is displayed. Write is not available.	The tuning result is displayed. Write is not available.
Pr.828 Model speed control gain	Manual input	The tuning result is displayed. Write is not available.	The tuning result is displayed. Write is not available.
Pr.881 Speed feed forward gain	Manual input	Manual input	Manual input

♦ Parameters referred to ♦

Pr.820 Speed control P gain 1, Pr.830 Speed control P gain 2 ☞ page 188
Pr.821 Speed control integral time 1, Pr.831 Speed control integral time 2 ☞ page 188
Pr.788 Low speed range torque characteristic selection ☞ page 173

5.3.8 Torque bias Vector

The torque bias function can be used to make the starting torque start-up faster. At this time, the motor starting torque can be adjusted with a contact signal or analog signal.

Pr.	Name	Initial value	Setting range	Description
840 G230	Torque bias selection	9999	0	Set the torque bias amount using contact signals (X42, X43) in **Pr.841 to Pr.843**.
			1	Set the torque bias amount using terminal 1 in any of **C16 to C19**. (When the squirrel cage rises during forward motor rotation.)
			2	Set the torque bias amount using terminal 1 in any of **C16 to C19**. (When the squirrel cage rises during reverse motor rotation.)
			3	The torque bias amount using terminal 1 can be set automatically in **C16 to C19** and **Pr.846** according to the load.
			24	Torque bias command via PROFIBUS-DP communication (FR-A8NP) (-400% to 400%)
			25	Torque bias command via PROFIBUS-DP communication (FR-A8NP) (-327.68% to 327.67%)
			9999	No torque bias, rated torque 100%
841 G231	Torque bias 1	9999	600 to 999%	Negative torque bias amount (-400% to -1%)
842 G232	Torque bias 2		1000 to 1400%	Positive torque bias amount (0 to 400%)
843 G233	Torque bias 3		9999	No torque bias setting
844 G234	Torque bias filter	9999	0 to 5 s	The time until the torque starts up.
			9999	The same operation as 0 s.
845 G235	Torque bias operation time	9999	0 to 5 s	The time for retaining the torque of the torque bias amount.
			9999	The same operation as 0 s.
846 G236	Torque bias balance compensation	9999	0 to 10 V	Set the voltage for the balanced load.
			9999	The same operation as 0 V.
847 G237	Fall-time torque bias terminal 1 bias	9999	0 to 400%	The bias value setting in the torque command.
			9999	The same as during rising **(C16, C17 (Pr.919))**.
848 G238	Fall-time torque bias terminal 1 gain	9999	0 to 400%	The gain value setting in the torque command.
			9999	The same as during rising **(C18, C19 (Pr.920))**.

The parameters above can be set when FR-A8AP (option) is installed.

上正科技有限公司
購買、維修 此手冊零組件
電話： 037-466555
Email: service@repairtw.com
Line id: @zzzz
www.repairtw.com

(1) Block diagram

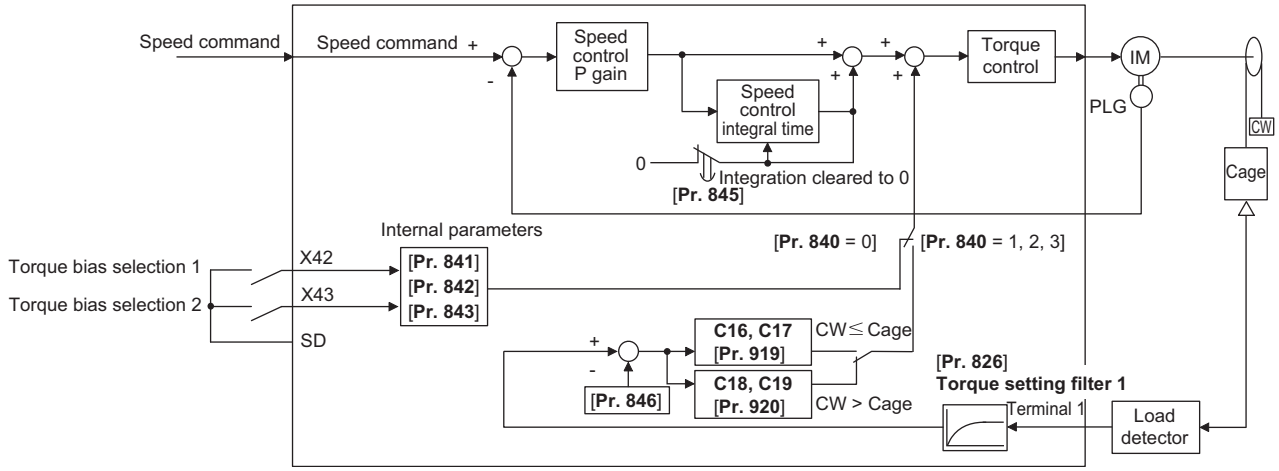

(2) Setting the torque bias amount using contact input (Pr.840="0", Pr.841 to Pr.843)

- Select the torque bias amount shown in the table below using the corresponding contact signal combination.
- To input the X42 signal, set "42" in any of **Pr.178 to Pr.189 (input terminal function selection)** to assign the function to a terminal, and to input the X43 signal, set "43".

Torque bias selection 1 (X42)	Torque bias selection 2 (X43)	Torque bias amount
OFF	OFF	0%
ON	OFF	**Pr.841** -400% to +400% (Setting value: 600 to 1400%)
OFF	ON	**Pr.842** -400% to +400% (Setting value: 600 to 1400%)
ON	ON	**Pr.843** -400% to +400% (Setting value: 600 to 1400%)

- When **Pr.841**=1025, the torque bias is 25%. When **Pr.842**=975, the torque bias is -25%. When **Pr.843**=925, the torque bias is -75%.

REMARKS

- Changing the terminal assignment using **Pr.178 to Pr.189 (input terminal function selection)** may affect the other functions. Set parameters after confirming the function of each terminal.

(3) Setting the torque bias amount using terminal 1 (Pr.840 ="1, 2", Pr.847, Pr.848)

- Calculate the torque bias from the load input to terminal 1 as shown in the diagram below, and then apply the torque bias.
- To set the torque bias amount with a voltage input to terminal 1, set **Pr.868 Terminal 1 function assignment** ="6".
- The torque bias amount (**Pr.847**) and gain amount (**Pr.848**) when descending (reverse motor rotation when the **Pr.840** setting is "1", forward motor rotation when the setting is "2") can be set in a range of 0 to 400%. When **Pr.847 or Pr.848** ="9999", the setting is the same for both descending and ascending (**C16 to C19**).

上正科技有限公司
購買、維修 此手冊零組件
電話： 037-466333
Email: service@repairtw.com
Line id: @3337
www.repairtw.com

Pr.840 Setting	When ascending	When descending
1	**(Forward motor rotation)** 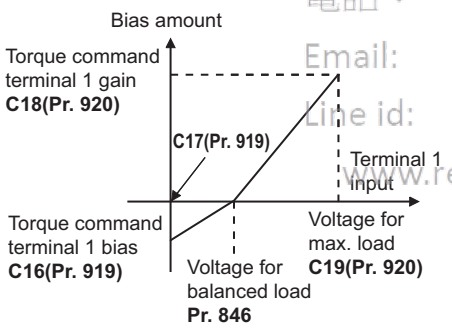	**(Reverse motor rotation)** 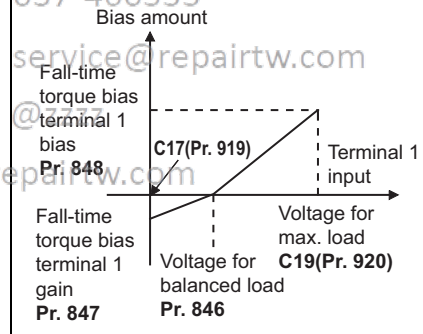
2	**(Reverse motor rotation)** 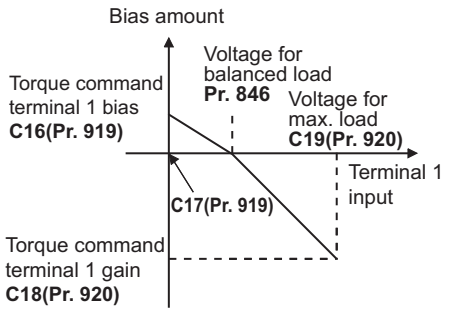	**(Forward motor rotation)** 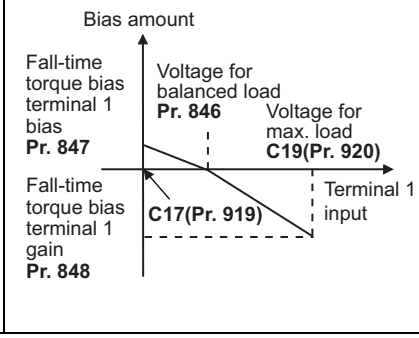

REMARKS

- Input 0 to 10 V (torque command) to the terminal 1 that is used for the torque bias function. Any negative input voltage is regarded as 0 V.

(4) Setting the torque bias amount automatically using terminal 1 (Pr.840="3", Pr.846)

- The settings of **C16 Terminal 1 bias command (torque/magnetic flux), C17 Terminal 1 bias (torque/magnetic flux), C18 Terminal 1 gain command (torque/magnetic flux), C19 Terminal 1 gain (torque/magnetic flux)** and **Pr.846 Torque bias balance compensation** can be set automatically according to the load.
- To set the torque bias amount with a voltage input to terminal 1, set **Pr.868 Terminal 1 function assignment**="6".
- Set the terminal 1 to accept inputs of load detection voltage, set "3" in **Pr.840 Torque bias selection**, and adjust the parameter settings following the procedures below.

Setting **C16, C17 (Pr.919)**

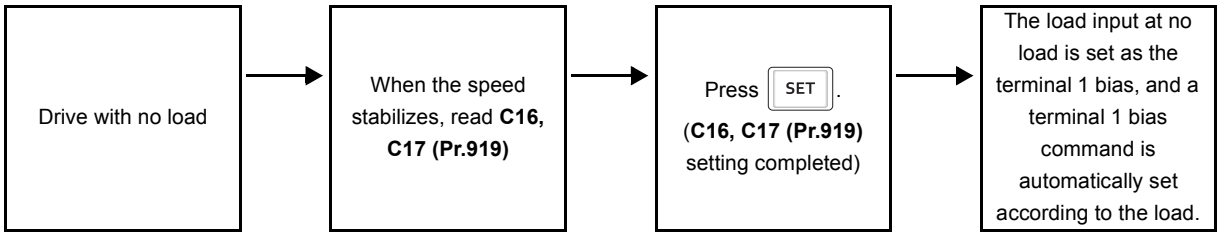

Setting **C18, C19 (Pr.920)**

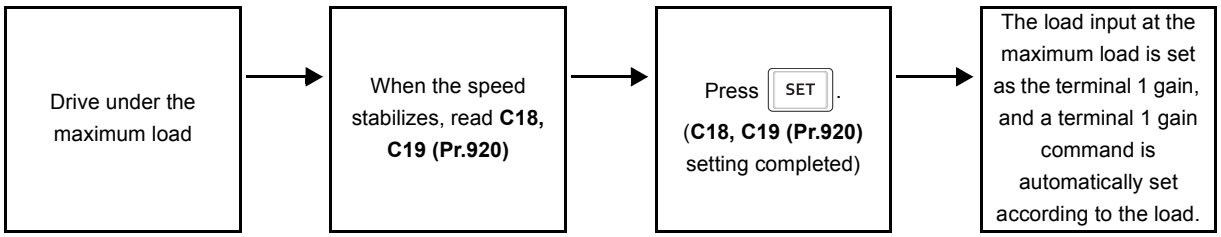

Setting **Pr.846**



上正科技有限公司
購買、維修 此手冊零組件
電話： 037-466383
Email: service@repairtw.com
Line id: @zzzz
www.repairtw.com

REMARKS

- To perform a torque bias operation after the automatic setting is completed, set **Pr.840** to "1" or "2".

(5) Torque bias command via PROFIBUS-DP communication (Pr.840 = "24 or 25")

- A torque bias command value can be set using the FR-A8NP (PROFIBUS-DP communication).

Pr.840 setting	Torque bias command input	Setting range	Setting increments
24	Torque bias command by the buffer memory of PROFIBUS (REF1 to 7)	600 to 1400 (-400% to 400%)	1%
25	Torque bias command by the buffer memory of PROFIBUS (REF1 to 7)	-32768 to 32767 (complement of 2) (-327.68% to 327.67%)	0.01%

REMARKS

- For the details of FR-A8NP setting, refer to the Instruction Manual of FR-A8NP.

(6) Torque bias operation (Pr.844, Pr.845)

- The torque start-up can be made slower by setting **Pr.844 Torque bias filter** ≠ "9999". The torque start-up operation at this time is the time constant of the primary delay filter.
- Set the time for continuing the output torque simply by using the command value for the torque bias in **Pr.845 Torque bias operation time**.

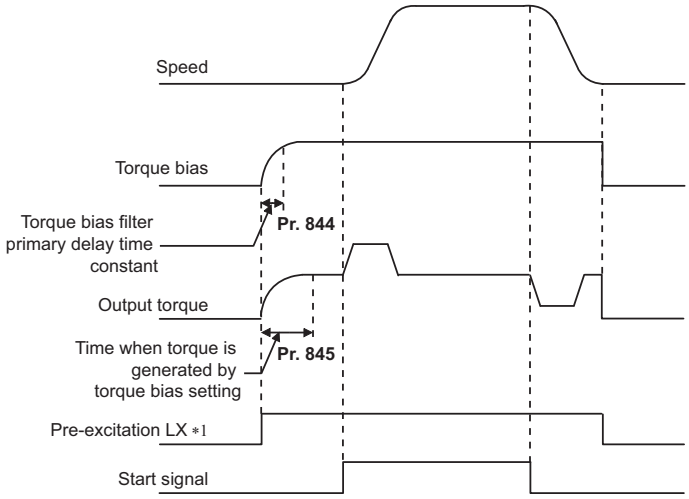

*1 When pre-excitation is not performed, the torque bias functions at the same time as the start signal.

REMARKS

- When torque bias is enabled and **Pr.868** ="6", terminal 1 operates as a torque command instead of a frequency setting auxiliary. When override compensation is selected using **Pr.73 Analog input selection** and terminal 1 is the main speed, no main speed (main speed=(0Hz) is set.
- Changing the terminal assignment using **Pr.178 to Pr.189 (input terminal function selection)** may affect the other functions. Set parameters after confirming the function of each terminal.

上正科技有限公司
購買、維修 此手冊零組件
電話： 037-466333
Email: service@repairtw.com
Line Id: @2222
www.repairtw.com

♦ Parameters referred to ♦

Pr.73 Analog input selection ☞ page 391

Pr.178 to Pr.189 (input terminal function selection) ☞ page 416

C16 to C19 (Pr.919, Pr.920) (torque setting voltage (current) bias/gain) ☞ page 406

5.3.9 Avoiding motor overrunning Vector

Motor overrunning due to excessive load torque or an error in the setting of the number of encoder pulses can be avoided.

Pr.	Name	Initial value	Setting range	Description
285 H416	Speed deviation excess detection frequency *1	9999	0 to 30 Hz	Set the speed deviation excess detection frequency (difference between the actual rotation speed and speed command value) at which the protective function (E.OSD) activates.
			9999	No speed deviation excess
853 *2 H417	Speed deviation time	1 s	0 to 100 s	Set the time from when the speed deviation excess state is entered to when the protective function (E.OSD) activates.
873 *2 H415	Speed limit	20 Hz	0 to 400 Hz	Set the frequency limit with the set frequency + **Pr.873** value.
690 H881	Deceleration check time	1 s	0 to 3600 s	Set the time required to shut off output due to deceleration check after the start signal is OFF.
			9999	No deceleration check

*1 This is the overspeed detection frequency under encoder feedback control. (Refer to page 603.)

*2 These parameters are available when FR-A8AP (option) is installed.

(1) Speed deviation excess detection (Pr.285, Pr.853)

- A trip can be set for when the deviation between the set frequency and actual rotation speed is large, such as when the load torque is excessive.
- When the difference (absolute value) between the speed command value and actual rotation speed in speed control under vector control is equal to higher than the setting value in **Pr.285 Speed deviation excess detection frequency** for a continuous time equal to or longer than the setting value in **Pr.853 Speed deviation time**, **Speed deviation excess detection** (E.OSD) activates to shut off the inverter output.

上正科技有限公司
購買、維修此手冊零組件
電話： 037-466333
Email: service@repairtw.com
Line Id: @zzzz
www.repairtw.com

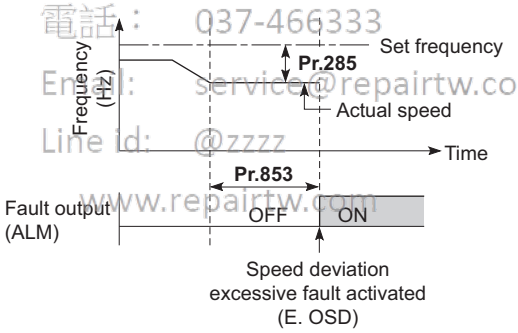

(2) Speed limit (Pr.873)

- This function prevents overrunning even when the setting value for the number of encoder pulses and the value of the actual number of pulses are different. When the setting value for the number of encoder pulses is lower than the actual number of pulses, because the motor may increase speed, the output frequency is limited with the frequency of (set frequency + **Pr.873**).

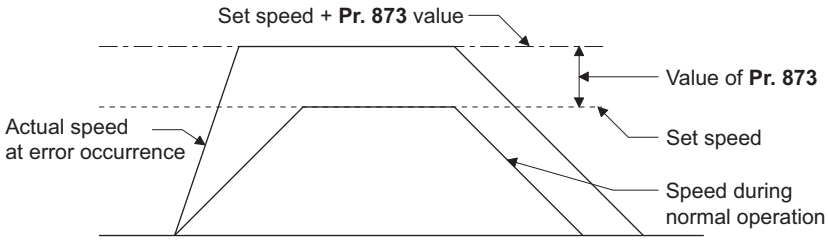

REMARKS

- When the automatic restart after instantaneous power failure function is selected (**Pr.57 Restart coasting time** ≠ "9999") and the setting value for the number of encoder pulses is lower than the actual number of pulses, the output speed is limited with the synchronous speed of the value of **Pr.1 Maximum frequency** + **Pr.873**.
- When a regenerative driving torque limit is applied and the speed limit function activates, the output torque may drop suddenly. Also, when the speed limit function activates during pre-excitation operation, output phase loss (E.LF) may occur.
  If the setting for the number of encoder pulses is confirmed as correct, it is recommended that **Pr.873** be set to the maximum value (400 Hz).
- Even if the set frequency is lowered after inverter operation, the speed limit value is not lowered. During deceleration, the speed is limited at frequency command value + **Pr.873**.

(3) Deceleration check (Pr.690)

- When performing a deceleration stop on the motor, accidental acceleration can cause the inverter to trip. This can prevent a malfunction due to an incorrect encoder pulse setting, when the motor has stopped.
- When the difference between the actual motor speed and the speed command value exceeds 2 Hz after the start signal (STF, STR) is OFF, the deceleration check will start.
- If the motor has not decelerated in the time period between the start signal (STF, STR) OFF and the **Pr.690** setting, the protective function (E.OSD) is activated to trip the inverter.

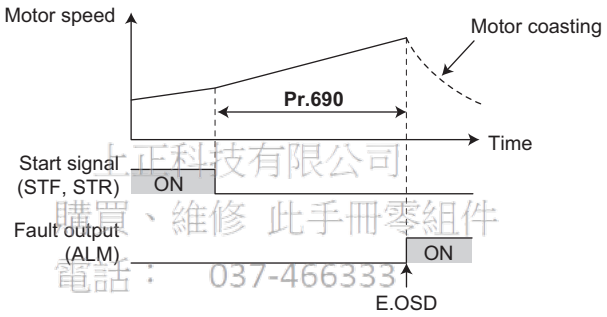

上正科技有限公司
購買、維修 此手冊零組件
電話： 037-466333
Email: service@repairtw.com
Line id: @3333
www.repairtw.com

REMARKS

- The deceleration check is enabled in the speed control of the vector control.
- If the protective function (E.OSD) operates due to deceleration check, check whether the **Pr.369 Number of encoder pulses** setting is correct.

♦ Parameters referred to ♦

Pr.285 Overspeed detection frequency ☞page 603

Pr.369 Number of encoder pulses ☞page 68

5.3.10 Notch filter Sensorless Vector PM

The response level of speed control in the resonance frequency band of mechanical systems can be lowered to avoid mechanical resonance.

Pr.	Name	Initial value	Setting range	Description
1003 G601	Notch filter frequency	0	0	No notch filter
			8 to 1250 Hz	Set the frequency for the center of gain attenuation.
1004 G602	Notch filter depth	0	0 to 3	0 (Deep) → 3 (Shallow)
1005 G603	Notch filter width	0	0 to 3	0 (Narrow) → 3 (Wide)

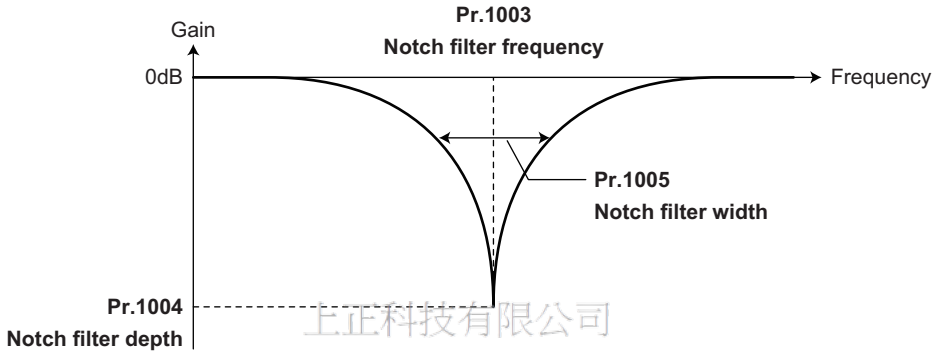

上正科技有限公司
購買、維修 此手冊零組件
電話： 037-466333
Email: service@repairtw.com
Line id: @rpc
www.repairtw.com

(1) Pr.1003 Notch filter frequency

- This sets the frequency for the center when attenuating the gain. If the mechanical resonance frequency is unknown, lower the notch frequency in order from the highest. The point where the resonance is smallest is the optimum setting for the notch frequency.
- The mechanical characteristics can be assessed in advance with a machine analyzer that uses FR Configurator2. This enables the required notch frequency to be determined.

(2) Pr.1004 Notch filter depth

- A deeper notch depth has a greater effect in reducing mechanical resonance, but because the phase delay is larger, vibration may increase. Adjust by starting from the shallowest value.

Setting	3	2	1	0
Depth	Shallow	→	←	Deep
Gain	-4dB	-8dB	-14dB	-40dB

(3) Pr.1005 Notch filter width

- This sets the width of the frequency to which to apply the notch filter. The setting can be adjusted according to the width of the frequency range to be excluded.
- If the width is too wide, the response level of speed control will drop, and the system may become unstable.

REMARKS

- If a value higher than 500 Hz is set in **Pr.1003** while the response speed is normal (**Pr.800** = any of "0 to 5 and 9 to 14"), the inverter operates at 500 Hz.

♦ Parameters referred to ♦

Pr.788 Low speed range torque characteristic selection ☞ page 173
Pr.800 Control method selection ☞ page 160

5.4 Torque control under Real sensorless vector control and vector control

Purpose	Parameter to set			Refer to page
To selection the torque command source and to set the torque command value	Torque command	P.D400 to P.D402, P.G210	Pr.803 to Pr.806	211
To prevent the motor from overspeeding	Speed limit	P.H410 to P.H412	Pr.807 to Pr.809	213
To raise precision of torque control	Torque control gain adjustment	P.G213, P.G214, P.G313, P.G314	Pr.824, Pr.825, Pr.834, Pr.835	219
To stabilize torque detection signal	Torque detection filter	P.G216, P.G316	Pr.827, Pr.837	248

5.4.1 Torque control

- Under torque control, the operation is controlled to output the commanded torque.
- Motor rotation speed is steady when the motor output torque and load torque are balanced.
  Thus, motor speed during torque control is determined by the load.
- Under torque control, motor speed accelerates so motor output torque does not exceed motor load. In order to prevent the motor from overspeeding, set a speed limit. (Speed control is performed instead of torque control during speed limit.)
- If speed limit is not set, speed limit value setting is regarded as 0 Hz and torque control is not enabled.

(1) Block diagram

上正科技有限公司
購買、維修 此手冊零組件
電話：037-466333
Email: service@repairtw.com
Line id: @zzzz
www.repairtw.com

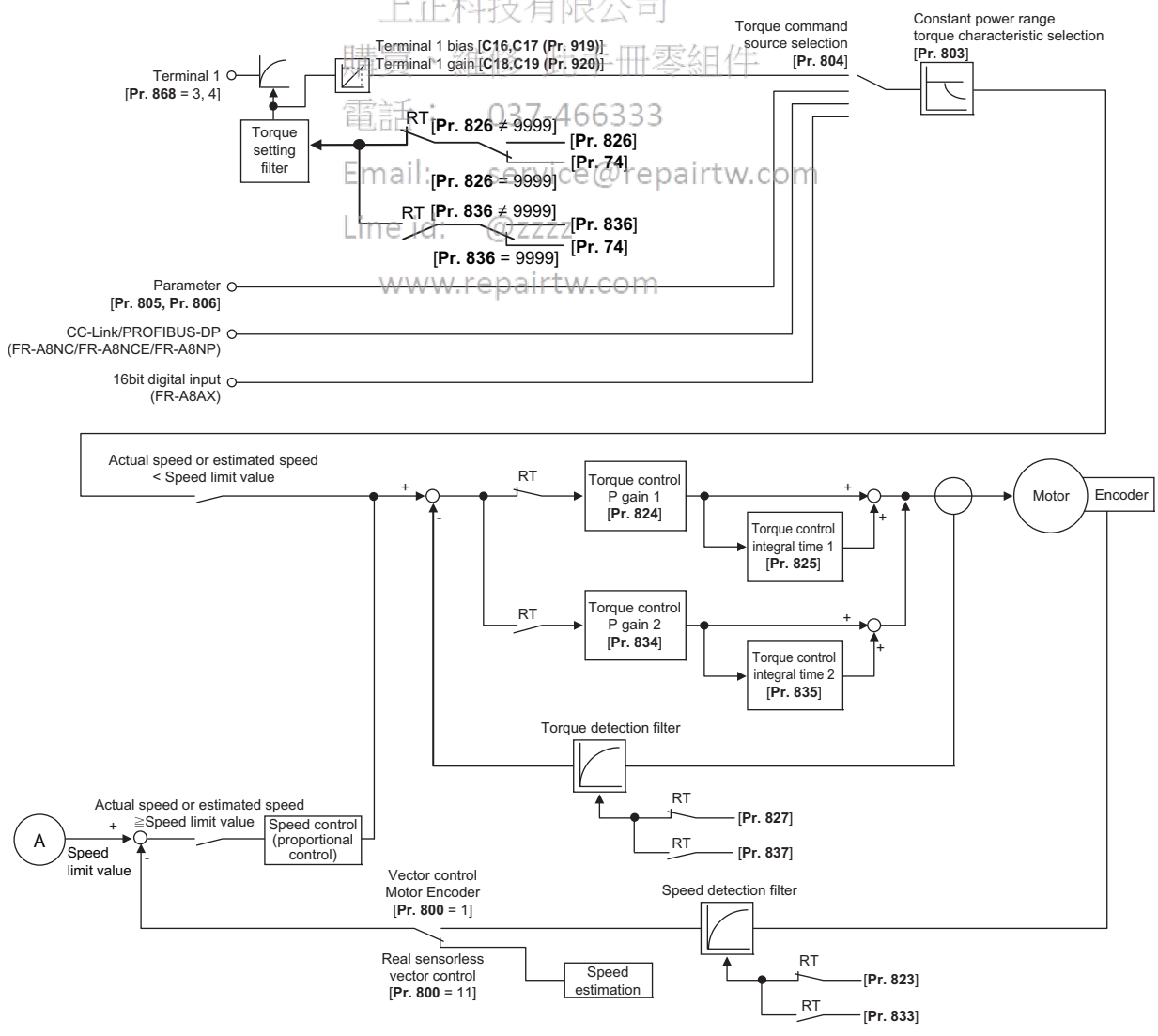

Torque control under Real sensorless vector control and vector control

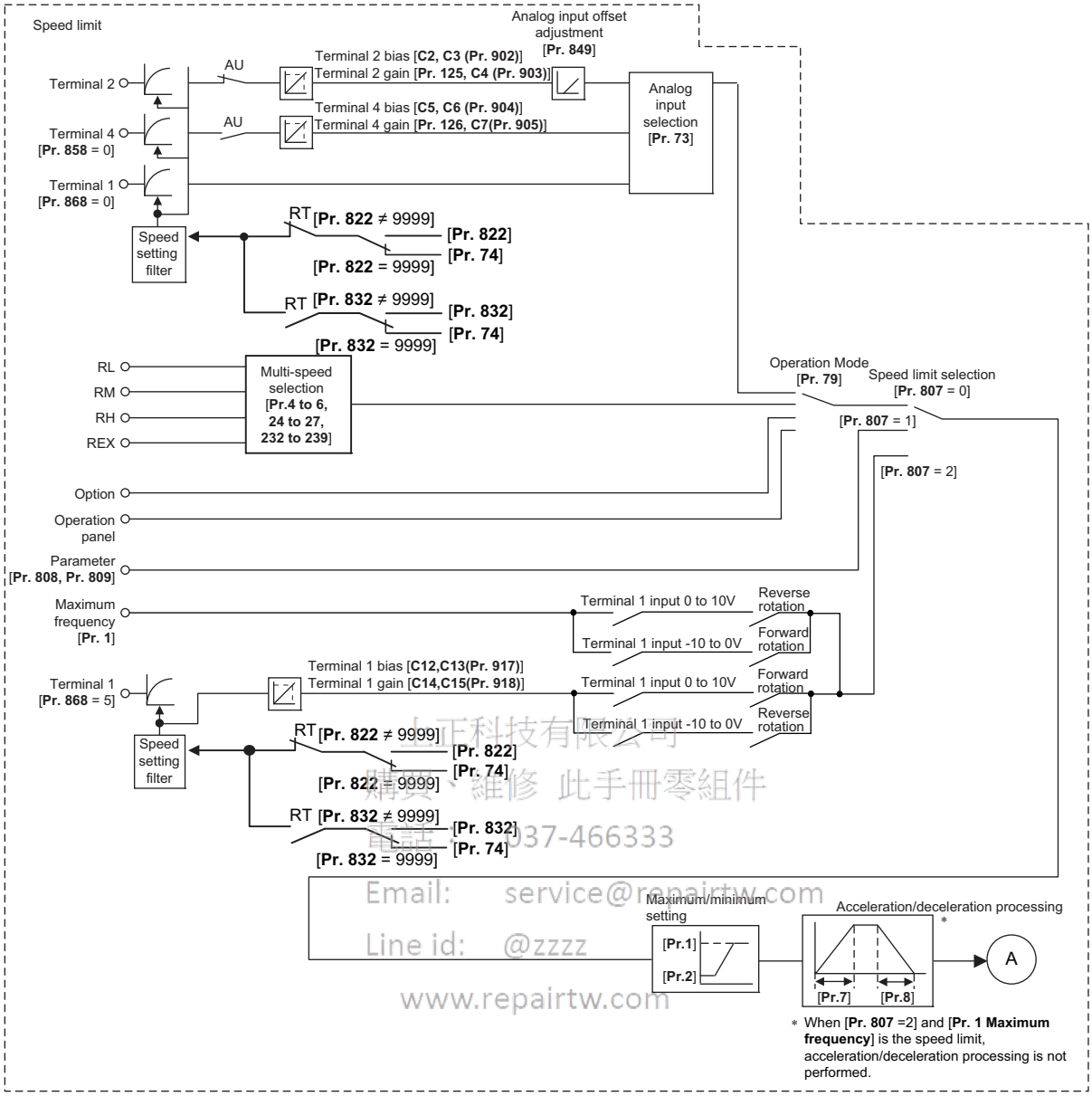

上正科技有限公司
購買、維修 此手冊零組件
電話: 037-466333
Email: service@repairtw.com
Line id: @zzzz
www.repairtw.com

(2) Operation transition

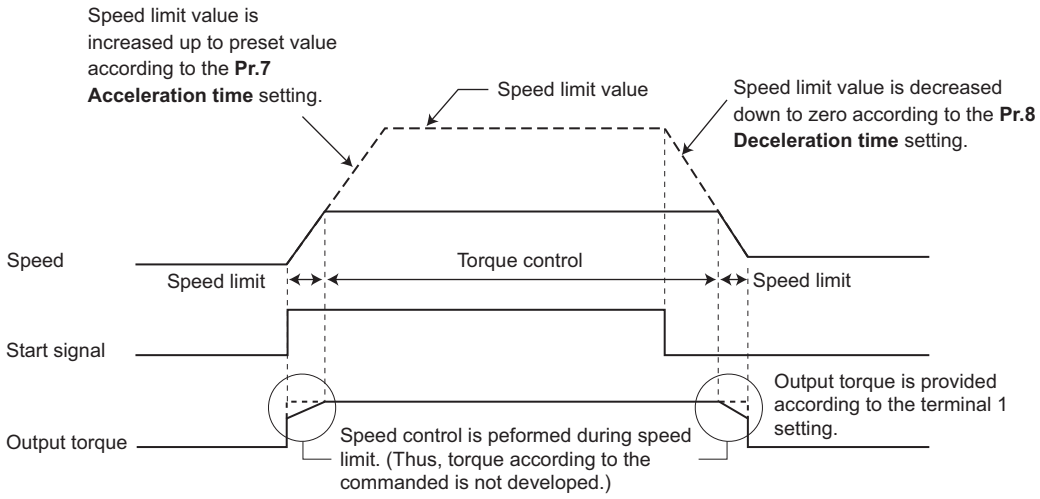

- If the setting value of **Pr.7** and **Pr.8** is "0", turning OFF the start signal enables speed control, and the output torque is controlled by the torque limit value.

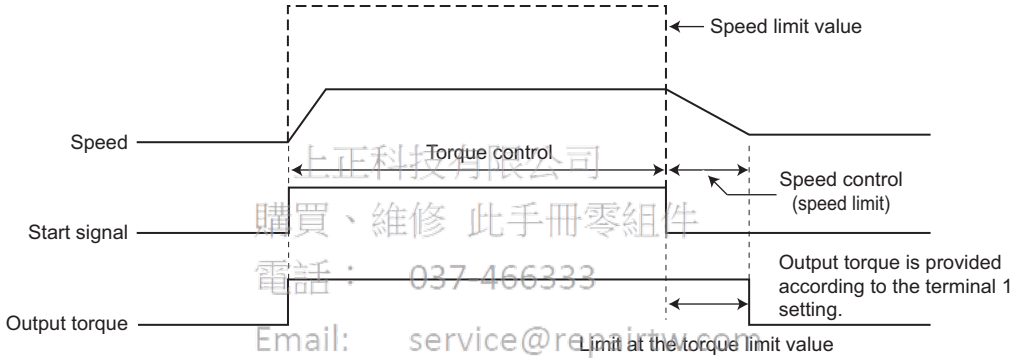

上正科技有限公司
購買、維修 此手冊零組件
電話： 037-466333
Email: service@repairtw.com
Line id: @zzz
www.repairtw.com

Item	Description	
Start signal	External operation	STF, STR signal
	PU operation	FWD or REV on the operation panel or FR-PU07.
Torque command	Selects the torque command input method and inputs the torque command.	
Speed limit	Selects the speed limit input method and inputs a speed limit value.	

(3) Operation example (when Pr.804="0")

Torque control is possible when actual rotation speed does not exceed the speed limit value.
When the actual speed reaches or exceeds the speed limit value, speed limit is activated, torque control is stopped and speed control (proportional control) is performed.
The following diagram indicates operation relative to analog input command from the terminal 1.

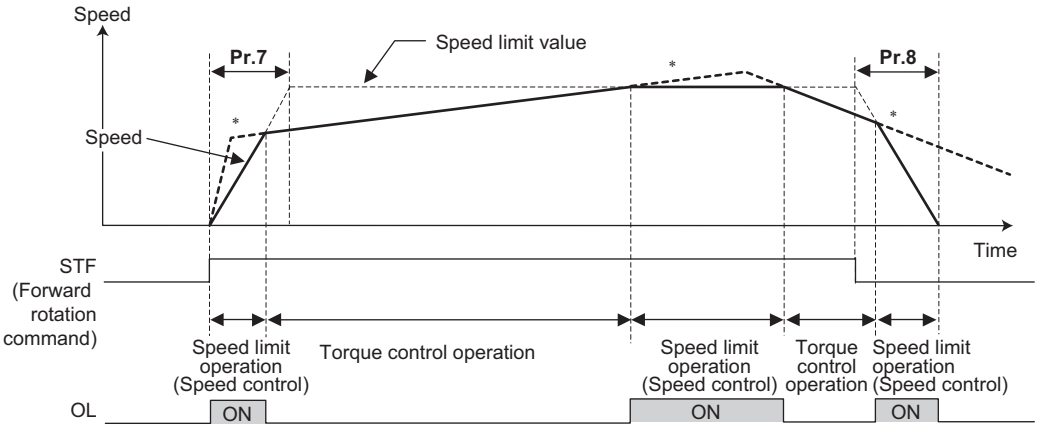

*When the speed limit activates, torque according to the commanded is not developed.

1) At STF signal ON, the speed limit value is raised in accordance with the setting of **Pr.7**.
2) Speed control is performed when the actual speed exceeds the speed limit value.
3) At STF signal OFF, the speed limit value is lowered in accordance with the setting of **Pr.8**.
4) Under torque control, the actual operation speed is a constant speed when the torque command and load torque are balanced.
5) The direction of motor torque generation is determined by a combination of the input torque command polarity and the start signal, as given in the following table.

上正科技有限公司
購買、維修 此手冊零組件
電話： 037-466333
Email: service@repairtw.com
Line id: @zzzz
www.repairtw.com

Polarity of torque command	Torque generation direction	
	STF signal ON	STR signal ON
+ torque command	Forward direction (forward power driving / reverse regenerative driving)	Reverse direction (forward regenerative driving / reverse power driving)
- torque command	Reverse direction (forward regenerative driving / reverse power driving)	Forward direction (forward power driving / reverse regenerative driving)

REMARKS

- Once the speed limit is activated, speed control is performed and internal torque limit (**Pr.22 Torque limit level**) is enabled. (Initial value) In this case, it may not be possible to return to torque control.
  Torque limit should be external torque limit (terminals 1 and 4). (Refer to page 181.)
- Under torque control, the undervoltage avoidance function (**Pr.261**="11" or "12"), which is one of the power failure deceleration stop function, is invalid.
  When **Pr.261**="11 (12)", the operation is performed in the same manner as if **Pr.261**="1 (2)".
- Under torque control, perform linear acceleration/deceleration (**Pr.29**="0 (initial value)"). The inverter's protective function may operate for non-linear acceleration/deceleration patterns. (Refer to page 283.)
- Performing pre-excitation (LX signal and X13 signal) under torque control (Real sensorless vector control) may start the motor running at a low speed even when the start command (STF or STR) is not input The motor may run also at a low speed when the speed limit value=0 with a start command input. It must be confirmed that the motor running will not cause any safety problem before performing pre-excitation.

5.4.2 Setting procedure of Real sensorless vector control (torque control) Sensorless

Perform secure wiring.
(Refer to page 33.)

↓

Make the motor setting. (Pr.71)
(Refer to page 424.)

↓ Set "0 (standard motor)" or "1 (constant-torque motor)" in **Pr.71 Applied motor**.

Set the motor overheat protection. (Pr.9)
(Refer to page 322.)

↓ Set the rated motor current (A) in **Pr.9 Electronic thermal O/L relay**.

Set the motor capacity and the number of motor poles.
(Pr.80, Pr.81) (Refer to page 160.)

↓ Set the motor capacity (kW) in **Pr.80 Motor capacity**, and set the number of motor poles in **Pr.81 Number of motor poles**. (V/F control is performed when the setting is "9999" (initial value).)

Set the rated motor voltage and frequency.
(Pr.83, Pr.84) (Refer to page 428)

↓ Set the rated motor voltage (V) in **Pr.83 Rated motor voltage**, and set the rated motor frequency (Hz) in **Pr.84 Rated motor frequency**

Select the control method. (Pr.800) (Refer to page 160)

↓ Enable torque control by setting **Pr.800 Control method selection**="11" (torque control) or "12" (speed/torque switch) and torque control becomes valid.

Set the torque command. (Pr.804)
(Refer to page 211.)

↓

Set the speed limit. (Pr.807)
(Refer to page 213.)

↓

Perform offline auto tuning. (Pr.96)
(Refer to page 428.)

↓

Test run

正科技有限公司
購買、維修 此手冊零組件
電話: 037-456333
Email: service@repairtw.com
Line id: @zzzz
www.repairtw.com

As required

- Select online auto tuning. (**Pr.95**) (Refer to page 445.)
- Adjusting the torque control gain manually (Refer to page 219)

REMARKS

- During Real sensorless vector control, offline auto tuning must be performed properly before starting operations.
- The carrier frequency is limited during Real sensorless vector control. (Refer to page 270.)
- Torque control cannot be performed for low-speed regenerative driving and low-speed light load. Vector control must be selected.
- Performing pre-excitation (LX signal and X13 signal) under torque control may start the motor running at a low speed even when the start signal (STF or STR) is not input. The motor may run also at a low speed when the speed limit value = 0 with a start command input. It must be confirmed that the motor running will not cause any safety problem before performing pre-excitation.
- Switching between the forward rotation command (STF) and reverse rotation command (STR) must not be performed during operations under torque control. Otherwise, an overcurrent trip (E.OC[]) or opposite rotation deceleration fault (E.11) will occur.
- When performing continuous operations under Real sensorless vector control in FR-A820-00250(3.7K) or lower or FR-A840-00126(3.7K) or lower, the speed fluctuation increases at 20 Hz or less, and in the low-speed range of less than 1 Hz, there may be torque shortage. In such case, make a stop once and start again to improve the operating condition.
- If starting may occur while the motor is coasting under Real sensorless vector control, the frequency search must be set for the automatic restart after instantaneous power failure function (**Pr.57**≠"9999", **Pr.162**="10").
- When Real sensorless vector control is applied, not enough torque may be provided in the ultra low-speed range of about 2 Hz or lower. Generally, the speed control range is as follows.
  For power driving, 1:200 (2, 4 or 6 poles) (available at 0.3 Hz or higher when the rating is 60 Hz), 1:30 (8 or 10 poles) (available at 2 Hz or higher when the rating is 60 Hz).
  For regenerative driving, 1:12 (2 to 10 poles) (available at 5 Hz or higher when the rating is 60 Hz).

5.4.3 Setting procedure for vector control (torque control) Vector

Perform secure wiring.
(Refer to page 65.)

Install FR-A8AP (option).

Set motor and encoder.
(Pr.71, Pr.359, Pr.369)

Set **Pr.71 Applied motor**, **Pr.359 Encoder rotation direction** or **Pr.369 Number of encoder pulses** according to the motor and encoder used. (Refer to page 68.)

Set the overheat protection of the motor. (Pr.9)
(Refer to page 322.)

Set the rated motor current (A) in **Pr.9 Electronic thermal O/L relay**. When using the SF-V5RU or a motor equipped with a thermal sensor, set **Pr.9** = "0A".

Set the motor capacity and the number of motor poles.
(Pr.80, Pr.81) (Refer to page 160.)

Set the motor capacity (kW) in **Pr.80 Motor capacity**, and set the number of motor poles in **Pr.81 Number of motor poles.** (V/F control is performed when the setting is "9999" (initial value).)

Set the rated motor voltage and frequency.
(Pr.83, Pr.84) (Refer to page 68)

Set the rated motor voltage (V) in **Pr.83 Rated motor voltage**, and set the rated motor frequency (Hz) in **Pr.84 Rated motor frequency.**

Select the control method. (Pr.800) (Refer to page 160)

Select **Pr.800 Control method selection**="1 (torque control)", "2(speed/torque switch)", or "5(position torque switch)" to enable torque control.

Set the torque command. (Pr.804)
(Refer to page 211.)

Set the speed limit. (Pr.807)
(Refer to page 213.)

Test run

上市科技有限公司
購買、維修 此手冊零組件
電話： 037-466333
Email: service@repairtw.com
Line id: @zzzz
www.repairtw.com

As required

- Perform offline auto tuning. (**Pr.96**) (Refer to page 428)
- Select online auto tuning. (**Pr.95**) (Refer to page 445.)
- Adjusting the torque control gain manually (Refer to page 219)

REMARKS

- The carrier frequency is limited during vector control. (Refer to page 271.)

5.4.4 Torque command Sensorless Vector

For torque control, the torque command source can be selected.

Pr.	Name	Initial value	Setting range	Description	
803 G210	**Constant power range torque characteristic selection**	0	0	Constant motor output command	In the torque command setting, select torque command for the constant output area.
			1	Constant torque command	
804 D400	**Torque command source selection**	0	0	Torque command based on the analog input to the terminal 1	Speed limit by **Pr.807** setting
			1	Torque command (-400% to 400%) by the parameter setting (**Pr.805** or **Pr.806**)	
			3	Torque command via CC-Link communication (FR-A8NC/FR-A8NCE) Torque command via PROFIBUS-DR communication (FR-A8NP)	Speed limit by **Pr.808** or **Pr.809** setting
			4	12/16-bit digital input (FR-A8AX)	Speed limit by **Pr.807** setting
			5	Torque command via CC-Link communication (FR-A8NC/FR-A8NCE)	Speed limit by **Pr.808** or **Pr.809** setting
			6	Torque command via PROFIBUS-DR communication (FR-A8NP)	Speed limit by **Pr.807** setting
805 D401	**Torque command value (RAM)**	1000%	600 to 1400%	Writes the torque command value in RAM. Regards 1000% as 0%, and set torque command by an offset of 1000%.	
806 D402	**Torque command value (RAM,EEPROM)**	1000%	600 to 1400%	Writes the torque command value in RAM and EEPROM. Regards 1000% as 0%, and set torque command by an offset of 1000%.	
1114 D403	**Torque command reverse selection**	1	0	Not reversed	Select whether to reverse the torque command polarity or not when the reverse rotation command (STR) is turned ON.
			1	Reversed	

上正科技有限公司
購買 維修 此手冊零組件
電話： 037-466333
Email: service@repairtw.com
Line id: @zzzz
www.repairtw.com

(1) Control block diagram

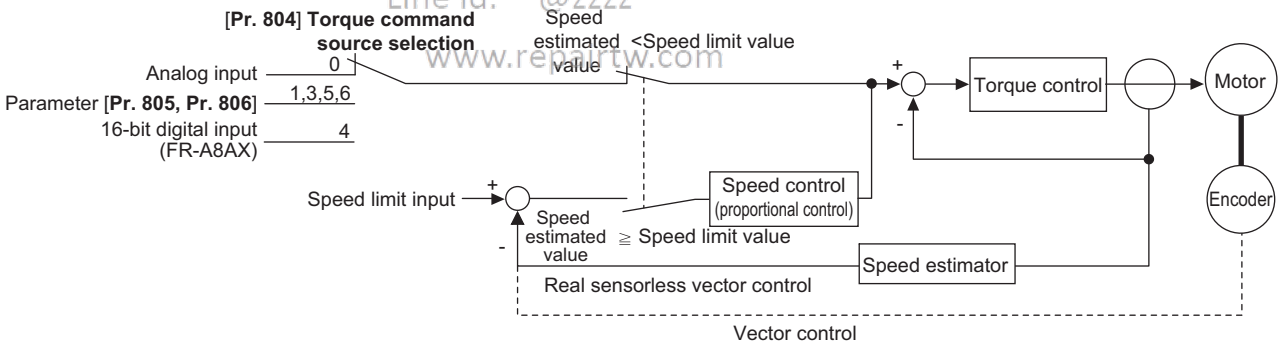

(2) Torque command by analog input (terminal 1) (Pr.804="0 (initial value)")

- Torque commands are given using voltage (current) input to the terminal 1.
- Set **Pr.868 Terminal 1 function assignment**="3, 4" to use the terminal 1 for torque command inputs.
- Torque commands given using analog inputs can be calibrated by **calibration parameters C16 (Pr.919) to C19 (Pr.920)** (Refer to page 406.)

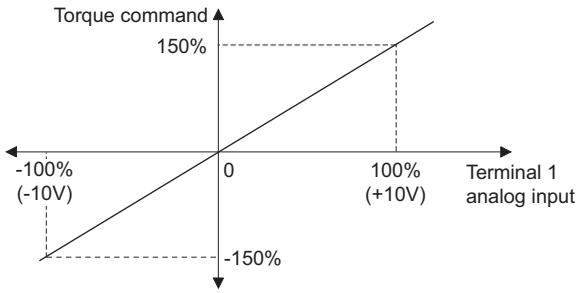

Torque control under Real sensorless vector control and vector control

(3) Torque command by parameter (Pr.804="1")

- Torque command values can be set by setting **Pr.805 Torque command value (RAM)** and **Pr.806 Torque command value (RAM,EEPROM)**.
- For **Pr.805** or **Pr.806**, regard 1000% as 0%, and set torque command by offset from 1000%.
  The following diagram shows relation between the **Pr.805** or **Pr.806** setting and the actual torque command value.
- To change torque command value frequently, write in **Pr.805**. If values are written in Pr.806 frequently, EEPROM life is shortened.
- When FR-A8NCE (CC-Link IE Field communication option) is mounted, torque command from FR-A8NCE is enabled.

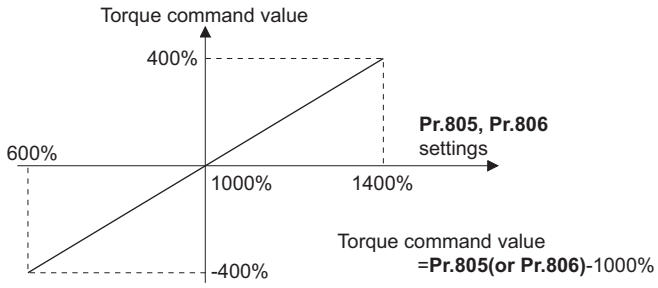

REMARKS

- When the torque command is set by **Pr.805** (RAM), powering OFF the inverter will erase the changed parameter value. Therefore,the parameter set value will be the one saved by **Pr.806** (EEPROM) when the power is turned back on.
- If providing torque command by parameter setting, set the speed limit value properly to prevent overspeeding. (Refer to page 213.)

(4) Torque command via CC-Link communication or PROFIBUS-DR communication (Pr.804="3, 5, or 6")

- Torque command values can be set via FR-A8NC (CC-Link communication option), FR-A8NCE (CC-Link IE Field communication option), or FR-A8NP (PROFIBUS-DR communication option).
- When **Pr.804**="3 or 5", **Pr.807 Speed limit selection** is disabled and **Pr.808 Forward rotation speed limit/speed limit** and **Pr.809 Reverse rotation speed limit/reverse-side speed limit** are enabled for speed limit.
- For the FR-A8NC, **Pr.807** is enabled when the extended cyclic setting of CC-Link communication is four times or eight times. For the FR-A8NCE, **Pr.807** is always enabled.

上正科技有限公司
購買、維修 此手冊零組件
電話： 037-466333
Email: service@repairtw.com
Line id: @zzzz
www.repairtw.com

Pr.804 setting	Torque command input			Setting range	Setting increments
	FR-A8NC	FR-A8NCE	FR-A8NP		
1	Torque command by **Pr.805, Pr.806**∗1	Same operation as the setting value "3"	Torque command by **Pr.805, Pr.806**∗1	600 to 1400 (-400% to 400%)	1%
3	Torque command by **Pr.805, Pr.806**∗1				
	Torque command by remote register (RWw1 or RWwC)	Torque command by remote register (RWw2 or RWw3)	Torque command by the buffer memory of PROFIBUS-DP (REF1 to 7)		
5	Torque command by **Pr.805, Pr.806**∗1			-32768 to 32767 (complement of 2) (-327.68% to 327.67%)∗2	0.01%∗2
	Torque command by remote register (RWw1 or RWwC)	Torque command by remote register (RWw2 or RWw3)	Torque command by the buffer memory of PROFIBUS-DP (REF1 to 7)		
6	Torque command by **Pr.805, Pr.806**∗1	Same operation as setting value "5"	Torque command by **Pr.805, Pr.806**∗1		

∗1 Can also be set from operation panel or parameter unit.

∗2 Setting range if set by operation panel or parameter unit is "673 to 1327 (-327% to 327%)"; setting increment is 1%.

REMARKS

- For the details of FR-A8NC, FR-A8NCE, FR-A8NP setting, refer to the Instruction Manual for the respective communication options.

(5) Torque command by 16-bit digital input (Pr.804="4")

- Execute torque command by 12-bit or 16-bit digital input using FR-A8AX (plug-in option).

REMARKS

- For the details of FR-A8AX setting, refer to the Instruction Manual of FR-A8AX.

(6) Modifying the torque characteristics in the constant output area (Pr.803)

- Because of the motor characteristics, torque is reduced at base frequency or higher. To generate a certain amount of torque at base frequency or higher, use **Pr.803 Constant power range torque characteristic selection**="1 or 11".
- Under torque control, the torque generated in the low-speed range is constant regardless of **Pr.803** setting.

Pr.803 setting	Torque characteristic in the constant output range
0 (initial value), 10	Constant motor output
1, 11	Constant torque

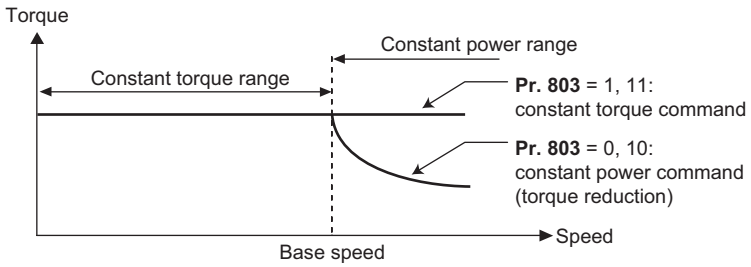

(7) Reverse selection of the torque command (Pr.1114)

- Whether the torque command polarity is reversed or not when the reverse rotation command (STR) is turned ON can be selected using **Pr.1114 Torque command reverse selection**.

Pr.1114 setting	Torque command polarity at STR signal ON (sign)
0	Not reversed
1 (initial value)	Reversed

上正科技有限公司
購買、維修 此手冊零組件
電話： 037-466333
Email: service@repairtw.com
Line Id: @zzzz
www.repairtw.com

♦ **Parameters referred to** ♦

Pr.868 Terminal 1 function assignment ☞ page 395
Calibration parameter C16 (Pr.919) to C19 (Pr.920) (terminal 1 bias, gain torque) ☞ page 406

5.4.5 Speed limit Sensorless Vector

When operating under torque control, motor overspeeding may occur if the load torque drops to a value less than the torque command value, etc. Set the speed limit value to prevent overspeeding.
If the actual speed exceeds the speed limit value, the control method switches from torque control to speed control, preventing overspeeding.

Pr.	Name	Initial value FM	Initial value CA	Setting range	Description
807 H410	Speed limit selection	0		0	Uses the speed command during speed control as the speed limit.
				1	Sets speed limits for forward and reverse directions individually by using **Pr.808** and **Pr.809**.
				2	Forward/reverse rotation speed limit. Applies speed limit by analog voltage input to the terminal 1. Speed limit for forward/reverse side is switched by its polarity.
808 H411	Forward rotation speed limit/ speed limit	60Hz	50Hz	0 to 400 Hz	Sets the forward side speed limit.
809 H412	Reverse rotation speed limit/ reverse-side speed limit	9999		0 to 400 Hz	Sets the reverse side speed limit.
				9999	**Pr.808** setting value is effective.
1113 H414	Speed limit method selection	0		9999	Speed limit mode 1
				0	Speed limit mode 2
				1	Speed limit mode 3
				2	Speed limit mode 4
				10	X93-OFF: Speed limit mode 3 X93-ON: Speed limit mode 4

Torque control under Real sensorless vector control and vector control

(1) Speed limit method selection (Pr.1113)

Pr.1113 setting	Speed limit method	Speed limit value
9999	Speed limit mode 1	Forward rotation speed limit **Pr.807**=0: Speed commend under speed control **Pr.807**=1: **Pr.808** **Pr.807**=2: Analog input at analog input of 0 to 10 V **Pr.1** at analog input of -10 to 0 V Reverse rotation speed limit **Pr.807**=0: Speed commend under speed control **Pr.807**=1: **Pr.809** (**Pr.808** when **Pr.809**="9999") **Pr.807**=2: **Pr.1** at analog input of 0 to 10 V Analog input at analog input of -10 to 0 V
0 (initial value)	Speed limit mode 2	Speed limit **Pr.807**=0 or 2: Speed commend under speed control **Pr.807**=1: **Pr.808** Reverse-side speed limit **Pr.809** (**Pr.808** when **Pr.809**="9999")
1	Speed limit mode 3	
2	Speed limit mode 4	
10	Switching by external terminals	X93-OFF: Speed limit mode 3 X93-ON: Speed limit mode 4

(2) Control block diagram (Speed limit mode 1)

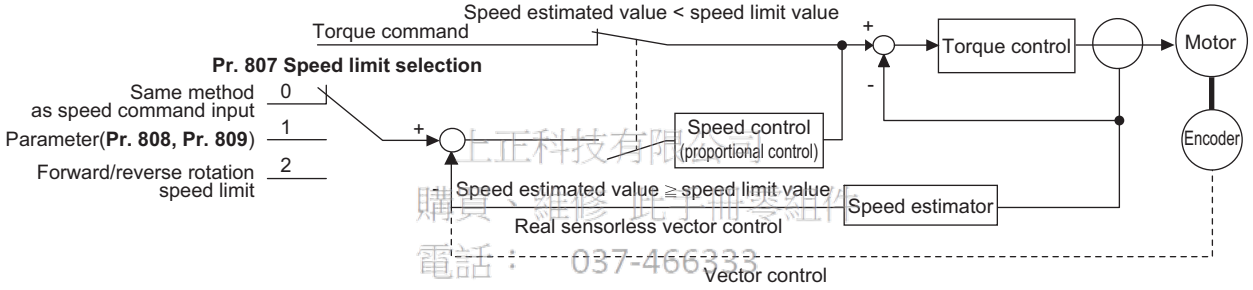

上正科技有限公司
購買、維修 此手冊委組件
電話： 037-466333
Email: service@repairtw.com
Line id: @xxx
www.repairtw.com

(3) Using the speed command during speed control (Pr.1113="9999", Pr.807="0").

- Speed limit is set by the same method as speed setting during speed control. (Speed setting by PU (FR-DU08/FR-PU07), multi-speed setting, plug-in option, etc.)
- At turn-ON of the start signal, the speed limit is raised from 0 Hz in accordance with the **Pr.7 Acceleration time**. At turn-OFF of the start signal, the speed limit is lowered from the speed at that point to the **Pr.10 DC injection brake operation frequency** in accordance with the **Pr.8 Deceleration time**. Then the motor is stopped.

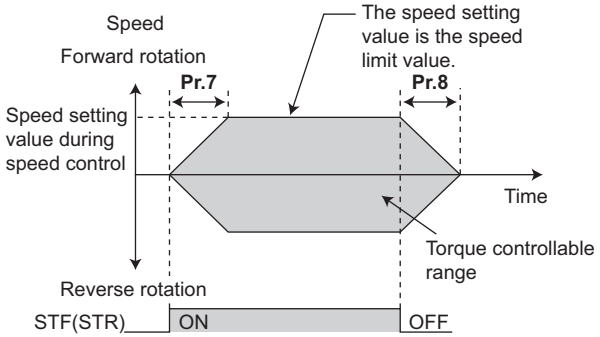

REMARKS

- The second and third acceleration/deceleration time can be set.
- When the speed limit command is larger than the **Pr.1 Maximum frequency** setting value, speed limit value becomes the **Pr.1** setting value. When the speed limit command is smaller than **Pr.2 Minimum frequency** setting value, speed limit value becomes the **Pr.2** setting value. Also when the speed limit command is smaller than the **Pr.13 Starting frequency**, the speed limit value becomes 0 Hz.
- To perform speed limit by analog input, calibrate analog input terminals 1, 2 and 4. (Refer to page 400.)
- To use analog inputs to perform speed control, turn the external signals (RH, RM, RL) OFF. If any of the external signals (RH, RM, RL) are ON, speed limit by multi-speed is enabled.

(4) Setting separately for forward and reverse rotation (Pr.1113="9999", Pr.807="1", Pr.808, Pr.809)

- Set the speed limit by **Pr.808 Forward rotation speed limit/speed limit** for forward rotation, and by **Pr.809 Reverse rotation speed limit/reverse-side speed limit** for reverse rotation.
- When **Pr.809**="9999(initial value)", speed limit is determined by the setting value of **Pr.808** for both forward and reverse rotations.

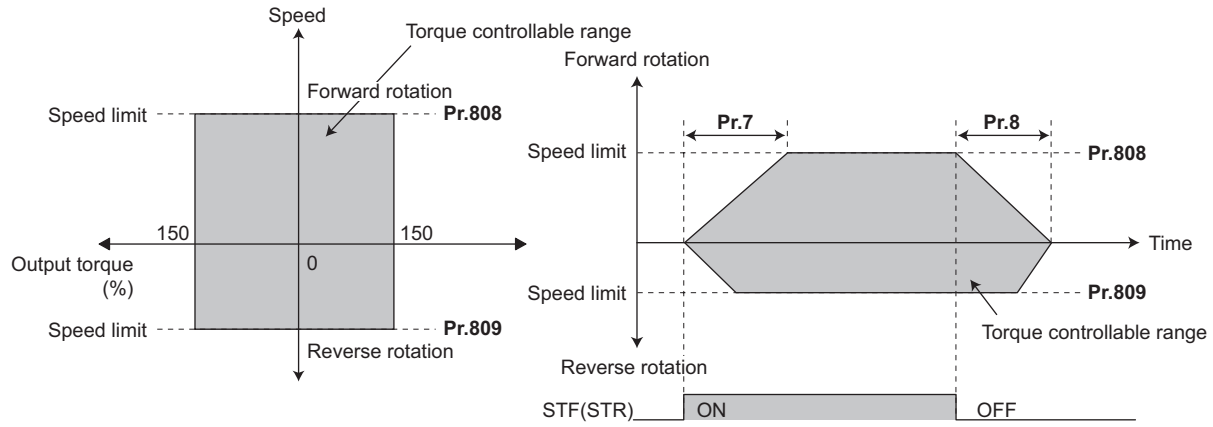

(5) Forward/reverse rotation speed limit using analog input (Pr.1113="9999", Pr.807="2")

- When performing speed limit by analog inputs to terminal 1, speed limit can be switched between forward and reverse rotation by its voltage polarity.
- When **Pr.868 Terminal 1 function assignment**="5", forward/reverse speed limit is enabled.
- If 0 to 10 V is input, forward rotation speed limit is applied. Reverse rotation speed limit at this time is the value of **Pr.1 Maximum frequency**.
- If -10 to 0 V is input, reverse rotation speed limit is applied. Forward rotation speed limit at this time is the value of **Pr.1**.
- Upper speed limit is the value of **Pr.1** for both forward and reverse rotations.

正正科技有限公司
購買、維修此手冊零組件
電話： 037-466333
Email: service@repairtw.com
Line id: @zzzz
www.repairtw.com

●When terminal 1 input is "-10 to 0V"

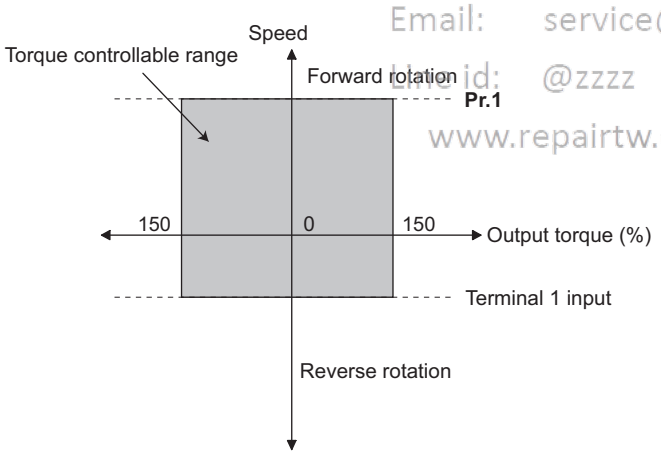

●When terminal 1 input is "0 to 10V"

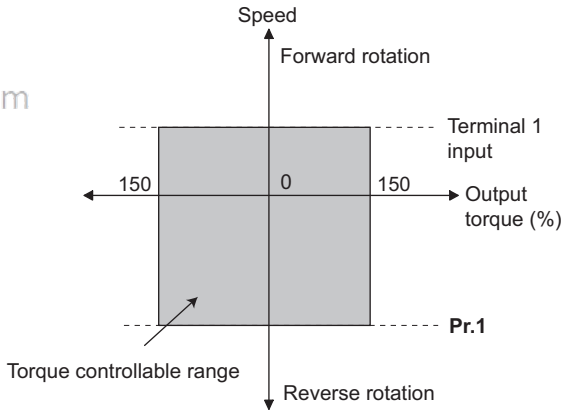

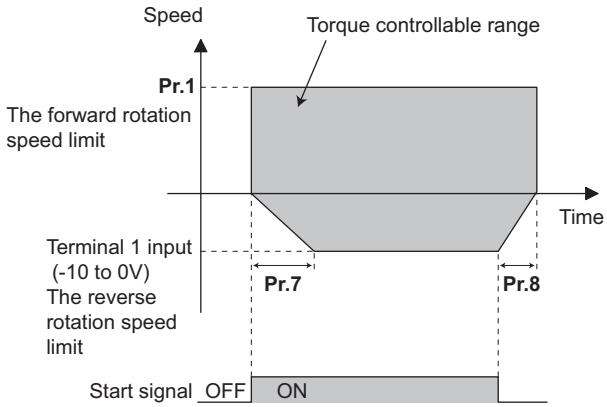

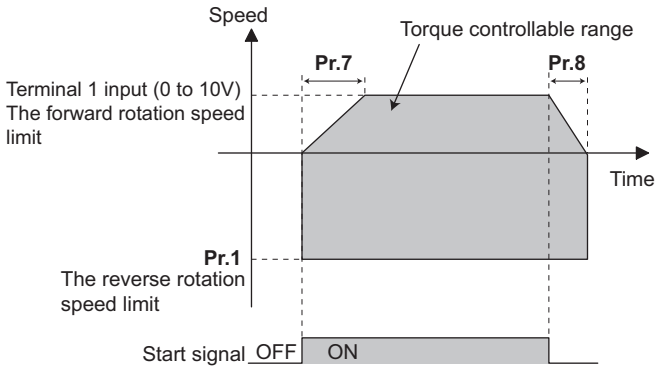

REMARKS

- To perform speed limit by using the terminal 1, calibrate the terminal 1. (Refer to page 400.)

(6) Speed limit mode 2 (Pr.1113="0", initial value)

- Following the polarity change in the torque command, the polarity of the speed limit value changes. This prevents the speed from increasing in the torque polarity direction. (When the torque command is 0, the polarity of the speed limit value is positive.)
- When **Pr.807 Speed limit selection**="0 or 2", the speed setting value for speed control is applied for the speed limit. When **Pr.807 Speed limit selection**="1", the setting of **Pr.808 Forward rotation speed limit/speed limit** is applied for the speed limit.
- When the load has reversed the rotation opposite to the torque polarity, the setting of **Pr.809 Reverse rotation speed limit/reverse-side speed limit** is applied for the speed limit. (The speed limit value and reverse-side speed limit value are limited at **Pr.1 Maximum frequency** (maximum 400 Hz under vector control).)

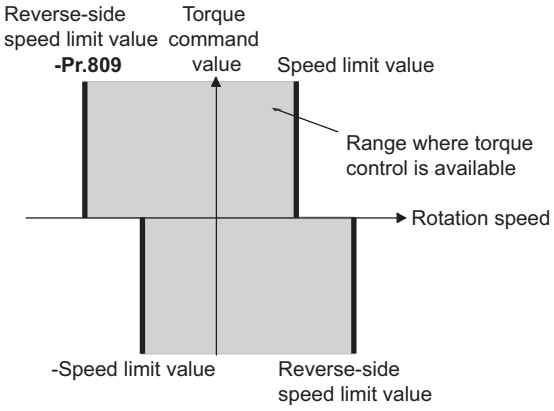

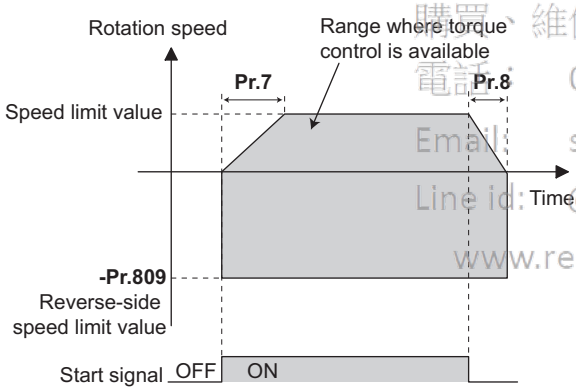

When the torque command value is positive

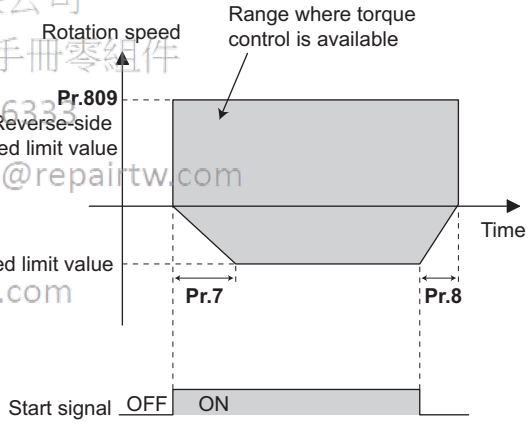

When the torque command value is negative

上正科技有限公司
購買、維修 此手冊零組件
電話: 037-466332
Email: service@repairtw.com
Line id: @zzzz
www.repairtw.com

(7) Speed limit mode 3 (Pr.1113="1")

- Select this mode when the torque command is positive. The forward rotation command is for power drive (such as winding) and the reverse rotation command is for regenerative driving (such as unwinding). (Refer to each inside of the frames in the following figures.)
- When **Pr.807 Speed limit selection**="0 or 2", the speed setting value for speed control is applied for the speed limit. When **Pr.807 Speed limit selection**="1", the setting of **Pr.808 Forward rotation speed limit/speed limit** is applied for the speed limit.
- When the torque command becomes negative, the setting of **Pr.809 Reverse rotation speed limit/reverse-side speed limit** is applied to prevent the speed from increasing in the reverse rotation direction. (The speed limit value and reverse-side speed limit value are limited at **Pr.1 Maximum frequency** (maximum 400 Hz under vector control).)

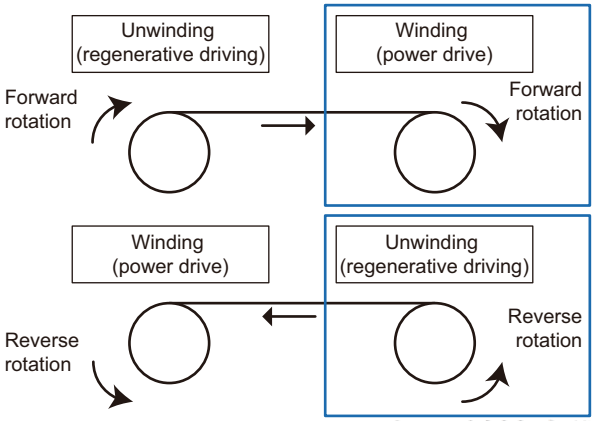

上正科技有限公司
購買、維修 此手冊零組件
電話: 037-466388
Email: service@repairtw.com
Line id: @zzzz
www.repairtw.com

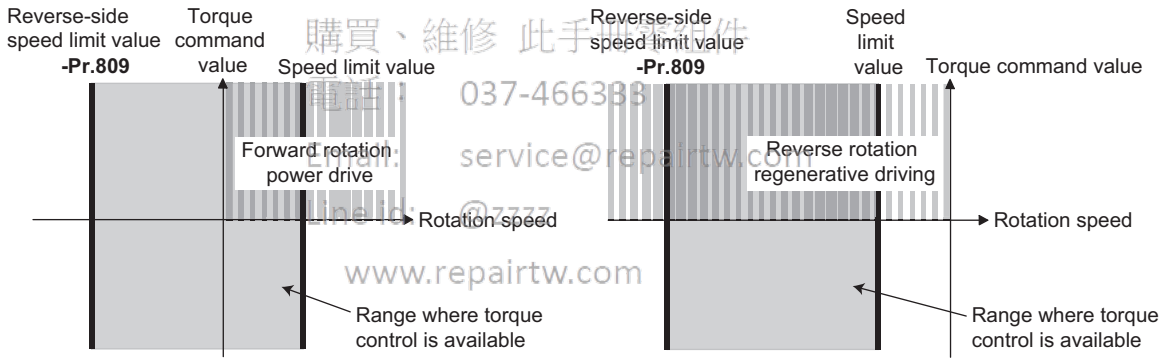

For forward rotation command

For reverse rotation command

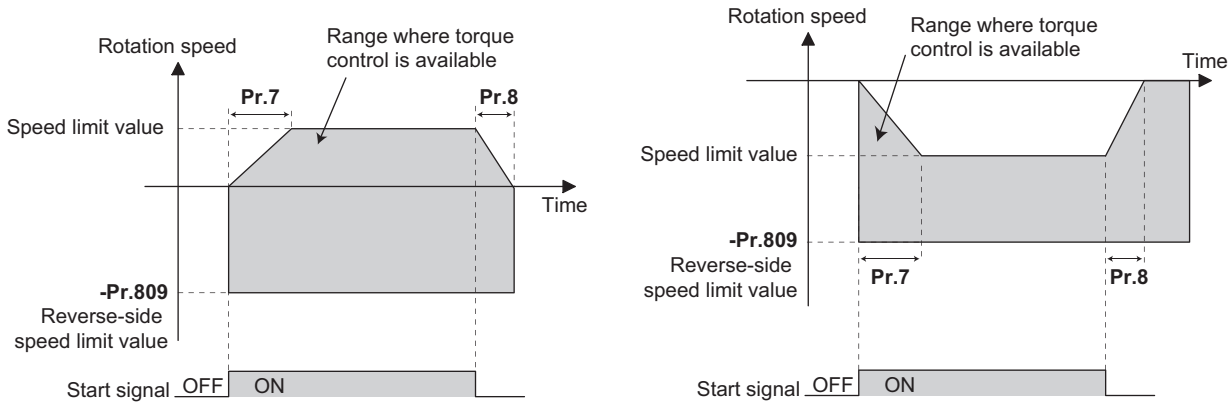

For power drive
by forward rotation command (winding)

For regenerative driving
by reverse rotation command (unwinding)

(8) Speed limit mode 4 (Pr.1113="2")

- Select this mode when the torque command is negative. The forward rotation command is for regenerative driving (such as unwinding) and the reverse rotation command is for power drive (such as winding). (Refer to each inside of the frames in the following figures.)
- When **Pr.807 Speed limit selection**="0 or 2", the speed setting value for speed control is applied for the speed limit. When **Pr.807 Speed limit selection**="1", the setting of **Pr.808 Forward rotation speed limit/speed limit** is applied for the speed limit.
- When the torque command becomes positive, the setting of **Pr.809 Reverse rotation speed limit/reverse-side speed limit** is applied to prevent the speed from increasing in the forward rotation direction. (The speed limit value and reverse-side speed limit value are limited at **Pr.1 Maximum frequency** (maximum 400 Hz under vector control).)

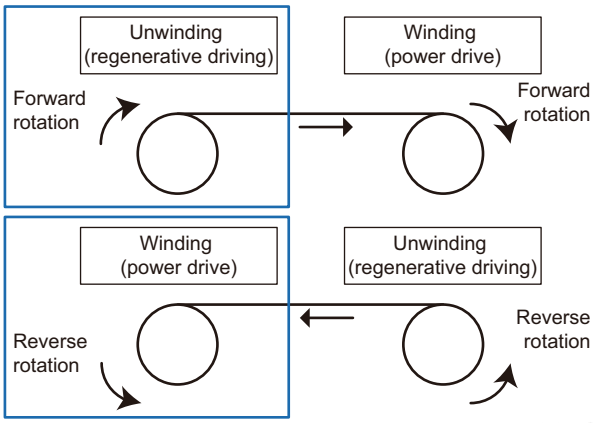

上正科技有限公司
購買、維修 此手冊零組件
電話： 037-466333
Email: service@repairtw.com
Line Id: @zzzz
www.repairtw.com

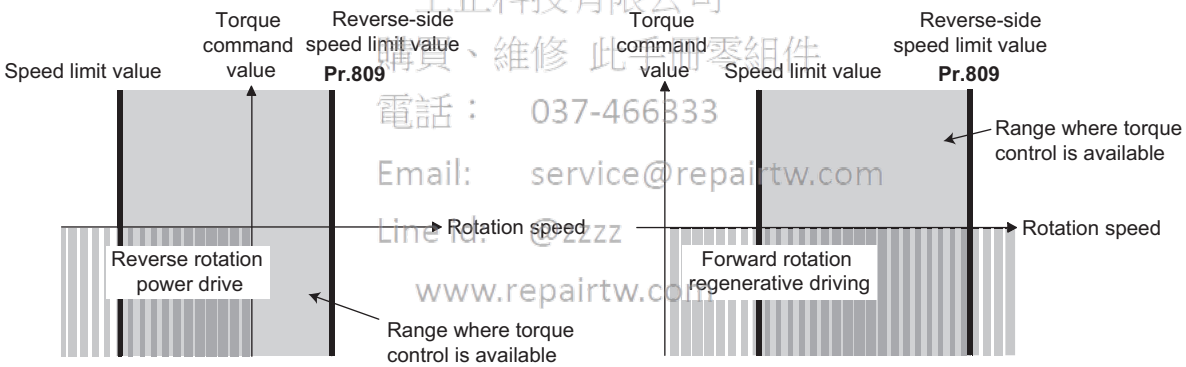

For reverse rotation command

For forward rotation command

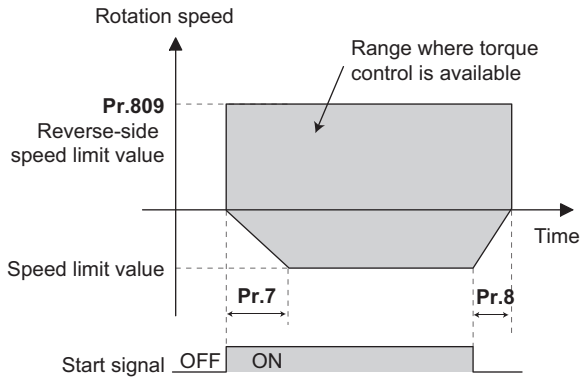

For power drive
by reverse rotation command (winding)

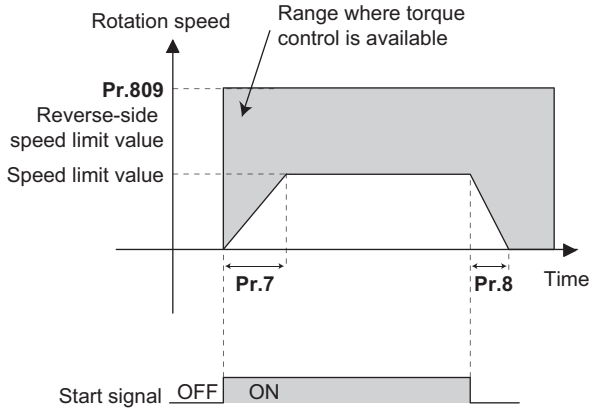

For regenerative driving
by forward rotation command (unwinding)

(9) Speed limit mode switching by external terminals (Pr.1113="10")

- The speed limit mode can be switch between 3 and 4 using the torque control selection (X93) signal.
- To assign the X93 signal, set "93" in any of **Pr.178 to Pr.189 (input terminal function selection)**.

X93 signal	Speed limit mode
OFF	Mode 3 (torque command=positive, **Pr.1113**=1 or equivalent)
ON	Mode 4 (torque command=negative, **Pr.1113**=2 or equivalent)

REMARKS

- During the speed limit operation, SL (SL) is displayed on the operation panel and OL signal is output.
- OL signal is assigned to the terminal OL in the initial status. Set "3" in any of **Pr.190 to Pr.196 (output terminal function selection)** to assign the OL signal to another terminal. Changing the terminal assignment using **Pr.190 to Pr.196** may affect the other functions. Set parameters after confirming the function of each terminal.
- Changing the terminal assignment using **Pr.178 to Pr.189 (input terminal function selection)** may affect the other functions. Set parameters after confirming the function of each terminal.

♦ **Parameters referred to** ♦

Pr.1 Maximum frequency, Pr.2 Minimum frequency ☞ page 334
Pr.4 to Pr.6, Pr.24 to Pr.27, Pr.232 to Pr.239 (Multi-speed operation) ☞ page 319
Pr.7 Acceleration time, Pr.8 Deceleration time ☞ page 278
Pr.13 Starting frequency ☞ page 291
Pr.190 to Pr.196 (output terminal function selection) ☞ page 370
Pr.868 Terminal 1 function assignment ☞ page 395
Pr.125, Pr.126, C2 to C7, C12 to C15 (frequency setting voltage (current) bias gain) ☞ page 400

5.4.6 Torque control gain adjustment Sensorless Vector

Operation is normally stable enough in the initial setting, but some adjustments can be made if if abnormal vibration, noise or overcurrent occur for the motor or machinery.

上正科技有限公司
購買、維修 此手冊零組件
電話： 037246333
Email: service@repairtw.com
Line id: @zzzz
www.repairtw.com

Pr.	Name	Initial value	Setting range	Description
824 G213	**Torque control P gain 1 (current loop proportional gain)**	100%	0 to 500%	Sets the current loop proportional gain. 100% is the equivalent to 2000 rad/s.
825 G214	**Torque control integral time 1 (current loop integral time)**	5 ms	0 to 500 ms	Sets current loop integral compensation time.
834 G313	**Torque control P gain 2**	9999	0 to 500%	Sets the current loop proportional gain when RT signal is ON.
			9999	The **Pr.824** setting is applied to the operation.
835 G314	**Torque control integral time 2**	9999	0 to 500 ms	Sets the current loop integral compensation time when RT signal is ON.
			9999	The **Pr.825** setting is applied to the operation.

(1) Current loop proportional (P) gain adjustment (Pr.824)

- The 100% current loop proportional gain is equivalent to 1000 rad/s during Real sensorless vector control, and to 1400 rad/s during vector control.
- For ordinary adjustment, try to set within the range of 50 to 500%.
- Set the proportional gain for during speed control.
- If setting value is large, changes in current command can be followed well and current fluctuation relative to external disturbance is smaller. If the setting value is however too large, it becomes unstable and high frequency torque pulse is produced.

(2) Current control integral time adjustment (Pr.825)

- Set the integral time of current control during torque control.
- Torque response increases if set small; current however becomes unstable if set too small.
- If the setting value is small, it produces current fluctuation toward disturbance, decreasing time until it returns to original current value.

(3) Using two types of gain (Pr.834, Pr.835)

- Use **Pr.834 Torque control P gain 2**, **Pr.835 Torque control integral time 2** if the gain setting needs to be switched according to application or if multiple motors are switched by a single inverter.
- The **Pr.834** and **Pr.835** settings are valid when the second function selection (RT) signal is ON.

REMARKS

- The RT signal is a second function selection signal. The RT signal also enables other second functions. (Refer to **page 420**.)
- RT signal is assigned to the terminal RT in the initial status. Set "3" in any of **Pr.178 to Pr.189 (input terminal function selection)** to assign the RT signal to another terminal.

(4) Adjustment procedure

Adjust if any of phenomena such as unusual vibration, noise, current or overcurrent is produced by the motor or machinery.

1) Change the **Pr.824** setting while checking the conditions.

2) If it cannot be adjusted well, change the **Pr.825** setting, and perform 1) again.

Adjustment method	
Set **Pr.824** lower and **Pr.825** longer. First, lower **Pr.824** and then check of there is still any abnormal vibration, noise or current from the motor. If it still requires improvement, make **Pr.825** longer.	
Pr.824	Lower the setting by 10% increments and set a value that is approximately 0.8 to 0.9 times the setting value, immediately before abnormal noise or current is improved. If set too low, current ripple is produced and produces a sound from the motor that synchronizes with it.
Pr.825	Lengthen the current setting by doubling it each time and set a value that is approximately 0.8 to 0.9 times the setting value, immediately before abnormal noise or current is improved. If set too long, current ripple is produced and produces a sound from the motor that synchronizes with it.

上止科技有限公司
購買、維修 此手冊零組件
電話： 037-466333
Email: service@repairtw.com
Line id: @zzzz
www.repairtw.com

5.4.7 Troubleshooting in torque control Sensorless Vector

	Condition	Cause	Countermeasure
1	Torque control does not operate properly.	• There is incorrect phase sequence between the motor wiring and encoder wiring.	• Check the wiring. (Refer to page 65.)
		• **Pr.800 Control method selection** setting is applied.	• Check the setting of **Pr.800**. (Refer to page 160.)
		• Speed limit value has not been input.	• Set speed limit value. (If speed limit value is not input, it becomes 0 Hz by default and the motor does not run.)
		• Torque command varies.	• Check that the torque command sent from the controller is correct. • Set **Pr.72 PWM frequency selection** lower. • Set **Pr.826 Torque setting filter 1** higher.
		• The torque command and the torque recognized by the inverter are different.	• Re-calibrate the **C16 Terminal 1 bias command (torque/magnetic flux)**, **C17 Terminal 1 bias (torque/magnetic flux)**, **C18 Terminal 1 gain command (torque/magnetic flux)**, and **C19 Terminal 1 gain (torque/magnetic flux)**. (Refer to page 406.)
		• Torque fluctuation due to motor temperature variation	• Select the magnetic flux observer by **Pr.95 Online auto tuning selection**. (Refer to page 445.)
2	When a small torque command is given, the motor rotates in a direction opposite to the start signal.	• Torque offset calibration is inaccurate.	• Re-calibrate **C16 Terminal 1 bias command (torque/magnetic flux)** and **C17 Terminal 1 bias (torque/magnetic flux)**. (Refer to page 406.)
3	Torque control cannot operate normally during acceleration/deceleration. The motor vibrates.	• Speed limit is operating. (Speed limit may operate because the speed limit value will increase or decrease according to acceleration/deceleration time setting of **Pr.7** and **Pr.8** when **Pr.807**="0 or 2".)	• Set the acceleration/deceleration time shorter. Alternatively, set acceleration/deceleration time to "0". (Speed limit during acceleration/deceleration is determined by the speed limit for constant speed.)
4	Output torque is nonlinear for the torque command.	Torque shortage	Return **Pr.854 Excitation ratio** to the initial value.

上正科技有限公司
購買、維修 此手冊零組件
電話： 057-466333
Email: service@repairtw.com
Line id: @zzzz
www.repairtw.com

♦ Parameters referred to ♦

Pr.72 PWM frequency selection ☞ page 270
Pr.178 to Pr.189 (input terminal function selection) ☞ page 416
Pr.800 Control method selection ☞ page 160
Pr.807 Speed limit selection ☞ page 213
C16 to C19 (torque setting voltage (current) bias/gain) ☞ page 406

5

5.4.8 Torque control by variable-current limiter control

By changing the torque limit value for speed control, torque control can be performed.

Pr.	Name	Initial value	Setting range	Description	
800 G200	Control method selection	20	6	Vector control	Variable-current limiter torque control
			106	Vector control (fast-response operation)	
			0 to 5, 100 to 105	Vector control	
			9, 109	Vector control test operation	
			10 to 12, 100 to 112	Real sensorless vector control	
			13, 14, 113, 114	PM sensorless vector control	
			20	V/F control (Advanced magnetic flux vector control, PM sensorless vector control)	

- By adding the bias amount to the line speed (master speed) as the speed command value to saturate the speed controller and changing the torque limit value, torque control can be performed.
- For a positive bias amount (the speed command value faster than the line speed), power drive is applied, and for a negative bias amount (the speed command value slower than the line speed), regenerative driving is applied.
- Speed control is the basic control block. For how to set the speed command and torque limit value, refer to speed control (page 174).

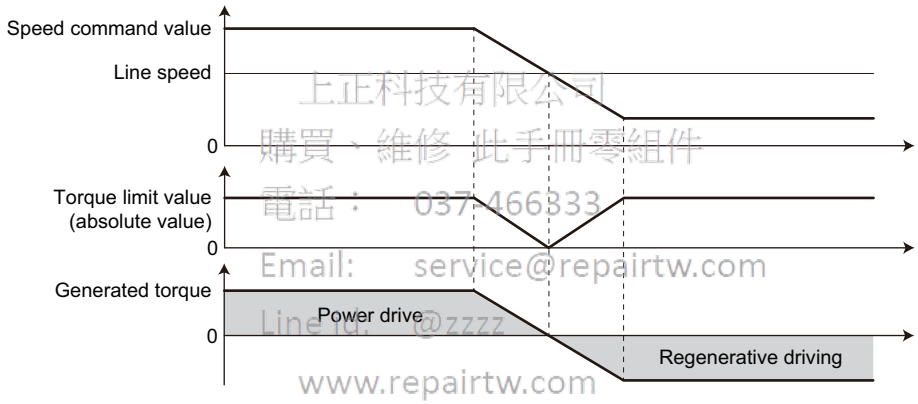

上正科技有限公司
購買、維修 此手冊零組件
電話： 037-466333
Email: service@repairtw.com
Line Id: @zzzz
www.repairtw.com

- Under speed control with **Pr.800**="0 or100", when the speed command value is changed by an external force, the torque limit is invalid at a change in the speed command value to adjust the internal speed command value to the actual speed. Under variable speed limiter control with **Pr.800**="6 or 106", the process to adjust the speed command value to the actual speed is not performed, and thus the torque limit remains valid. This prevents torque from suddenly changing at a speed change.

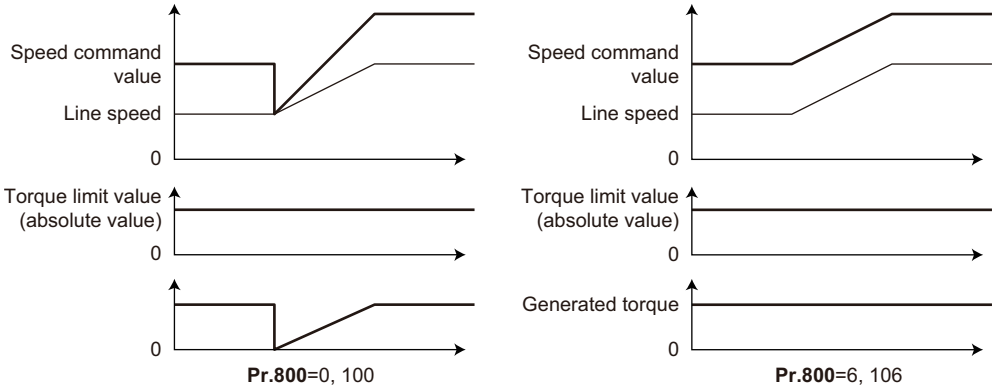

REMARKS

- When **Pr.800**="6 or 106" (torque control by a variable-current limiter), **Pr.690 Deceleration check time** and **Pr.873 Speed limit** are ignored.

♦ Parameters referred to ♦

Pr.690 Deceleration check time ☞ page 202
Pr.873 Speed limit ☞ page 202
Pr.800 Control method selection ☞ page 160

5.5 Position control under vector control and PM sensorless vector control

Purpose	Parameter to set			Refer to page
To perform Simple position control by setting parameters	To give parameter position command	P.B000, P.B020 to P.B050, P.B101, P.B120 to P.B188, P.B190 to P.B195	Pr.419, Pr.464 to Pr.494, Pr.1221 to Pr.1290, Pr.1292, Pr.1293	227
To perform position control by pulse input to the inverter	Simple pulse train position command	P.B000, P.B009 to P.B011	Pr.419, Pr.428 to Pr.430	239
To adjust the gear ratio of the motor and machine	Electronic gear settings	P.B001, P.B002 and P.B005	Pr.420, Pr.421 and Pr.424	242
To improve the precision of the position control	Setting the position adjustment parameters	P.B007, P.B008, P.B192 to P.B195	Pr.426, Pr.427, Pr.1294 to Pr.1297	244
	Position control gain adjustment	P.B003, P.B004, P.B006, P.B012, P.G220, P.G224, P.C114	Pr.422, Pr.423, Pr.425, Pr.446, Pr.828, Pr.877, Pr.880	245

5.5.1 About position control Vector PM

上正科技有限公司
購買、維修此手冊零組件
電話： 037-466333
Email: service@repairtw.com
Line Id: @zzzz
www.repairtw.com

- In position control, speed commands, which are calculated to eliminate the difference between the command pulse (parameter setting) and the estimated feedback pulse, are output to rotate the motor.
- This inverter can perform simple positioning by contact input or position control by simple pulse input to the inverter.

(1) Control block diagram

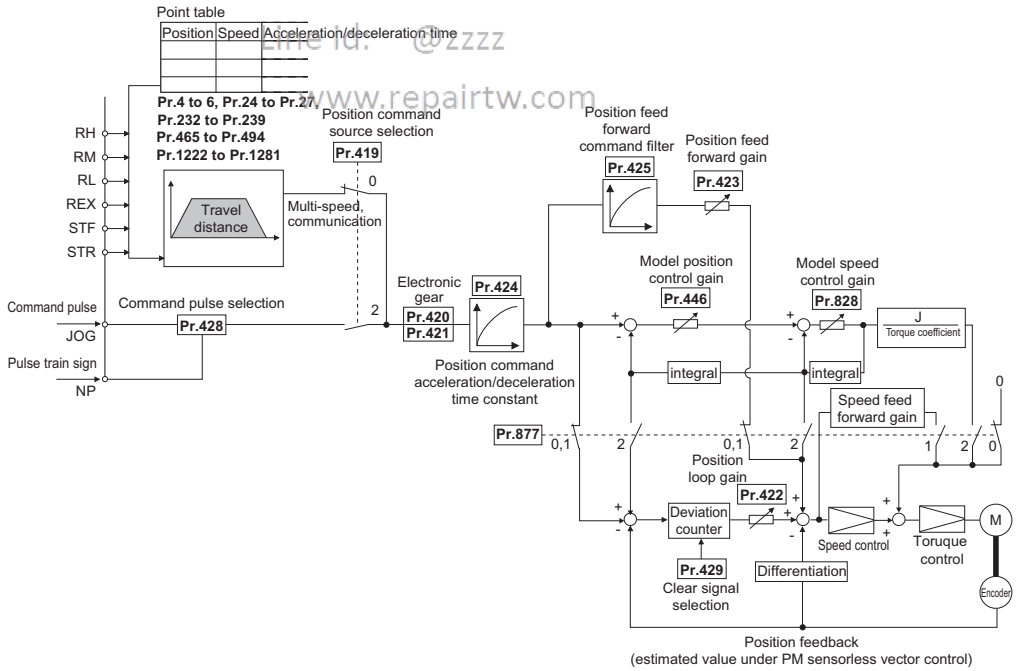

(2) Operation example

- Calculate the speed command so that the difference between the number of pulses of the internal pulse train (if **Pr.419**="0", command pulses are used in the inverter from the number of pulses defined by parameters (**Pr.465 to Pr.494**)) and the number of pulses in the feedback from the motor terminal encoder (estimated value when PM sensorless vector control is used) is 0, and then rotate the motor based on the calculation.
  1) Once a pulse train is input, pulses are accumulated in the deviation counter, and the droop pulses in this counter become position control pulses and speed command.
  2) When the motor starts to rotate in response to the speed command from the inverter, feedback pulses are also generated by the encoder at the same time. Subtract the encoder feedback pulses or feedback estimate value from the droop pulses in the deviation counter. The deviation counter keeps rotating the motor while keeping a certain droop amount.
  3) If the command pulse input stops, the amount of droop pulses in the deviation counter decreases and thus the speed slows down. When there is no droop pulse, the motor stops.
  4) If the number of droop pulses becomes smaller than the value set in **Pr.426 In-position width**, the system determines that positioning is complete and the positioning completion signal (Y36) is turned ON.

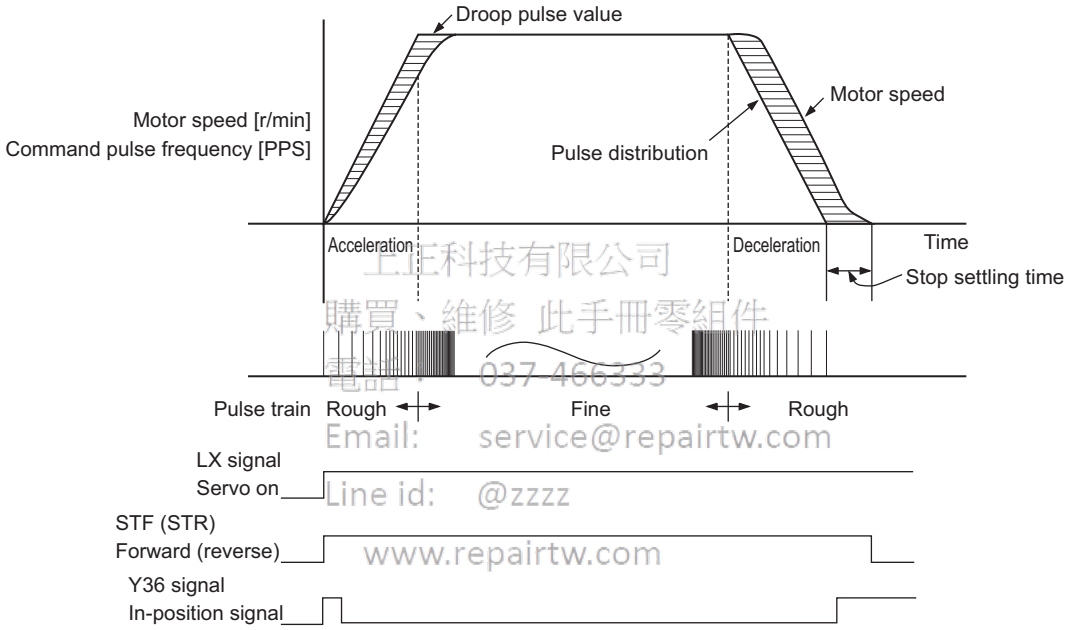

上正科技有限公司
購買、維修 此手冊零組件
電話： 037-466333
Email: service@repairtw.com
Line id: @zzzz
www.repairtw.com

- The pulses are slow during motor acceleration. The pulses are fast at full speed. The pulses become slower during deceleration, and eventually becomes 0 and the motor stops a little after the command pulse.
  This time difference is necessary to ensure stop accuracy and is called stop setting time.

REMARKS

- To assign the servo ON signal (LX), set "23" in any of **Pr.178 to Pr.189 (input terminal function selection)**.
- To assign the positioning completion signal (Y36), set "36" in any of **Pr.190 to Pr.196 (output terminal function selection)**.
- Changing the terminal assignment using **Pr.178 to Pr.189 or Pr.190 to Pr.196** may affect other functions. Set parameters after confirming the function of each terminal.

♦ Parameters referred to ♦

Pr.178 to Pr.189 (input terminal function selection) ☞ page 416
Pr.190 to Pr.196 (output terminal function selection) ☞ page 370

5.5.2 Setting procedure of vector control (position control) Vector

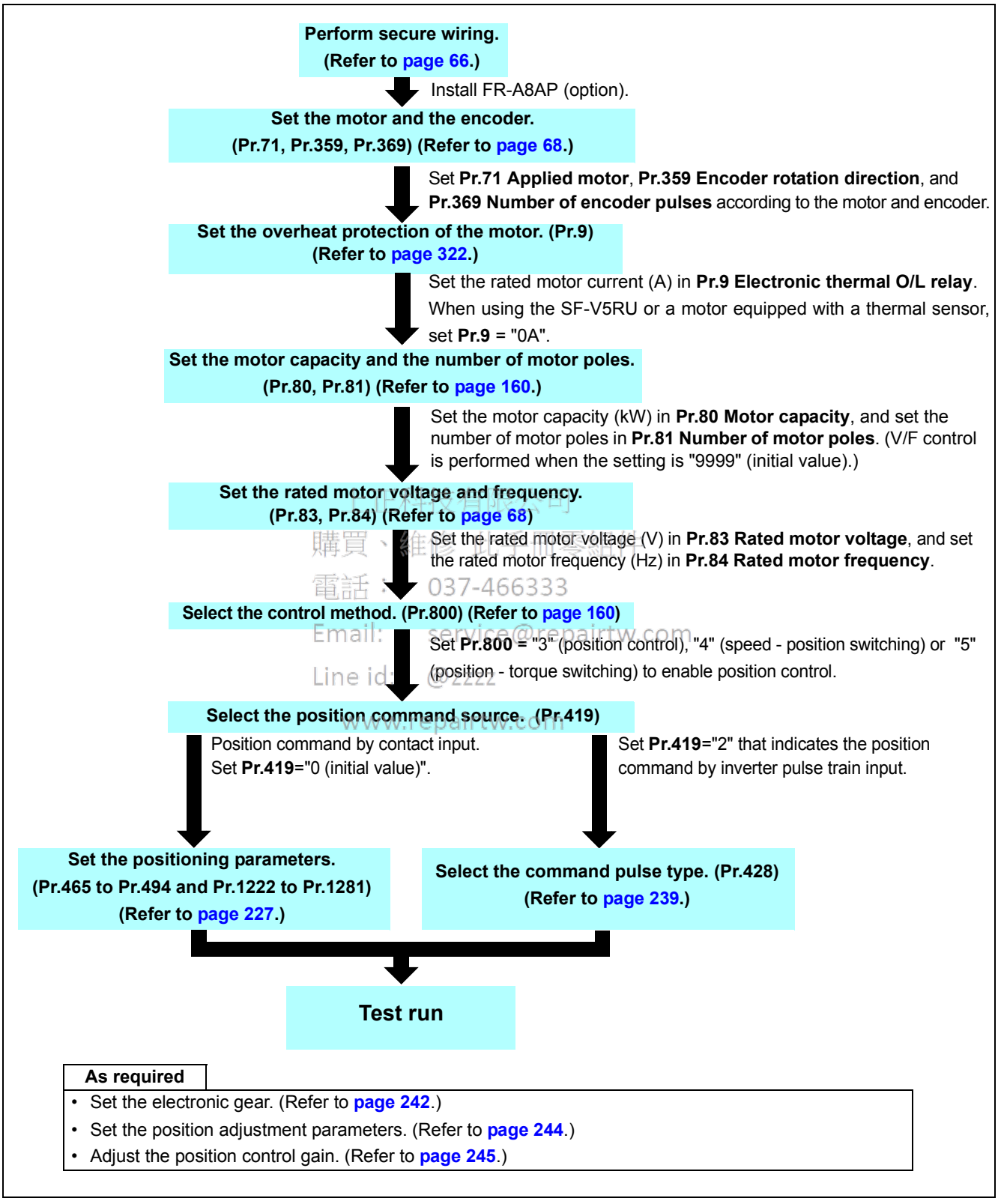

REMARKS

- The carrier frequency is limited during vector control. (Refer to page 270.)

5.5.3 Set the procedure of PM sensorless vector control (position control) PM

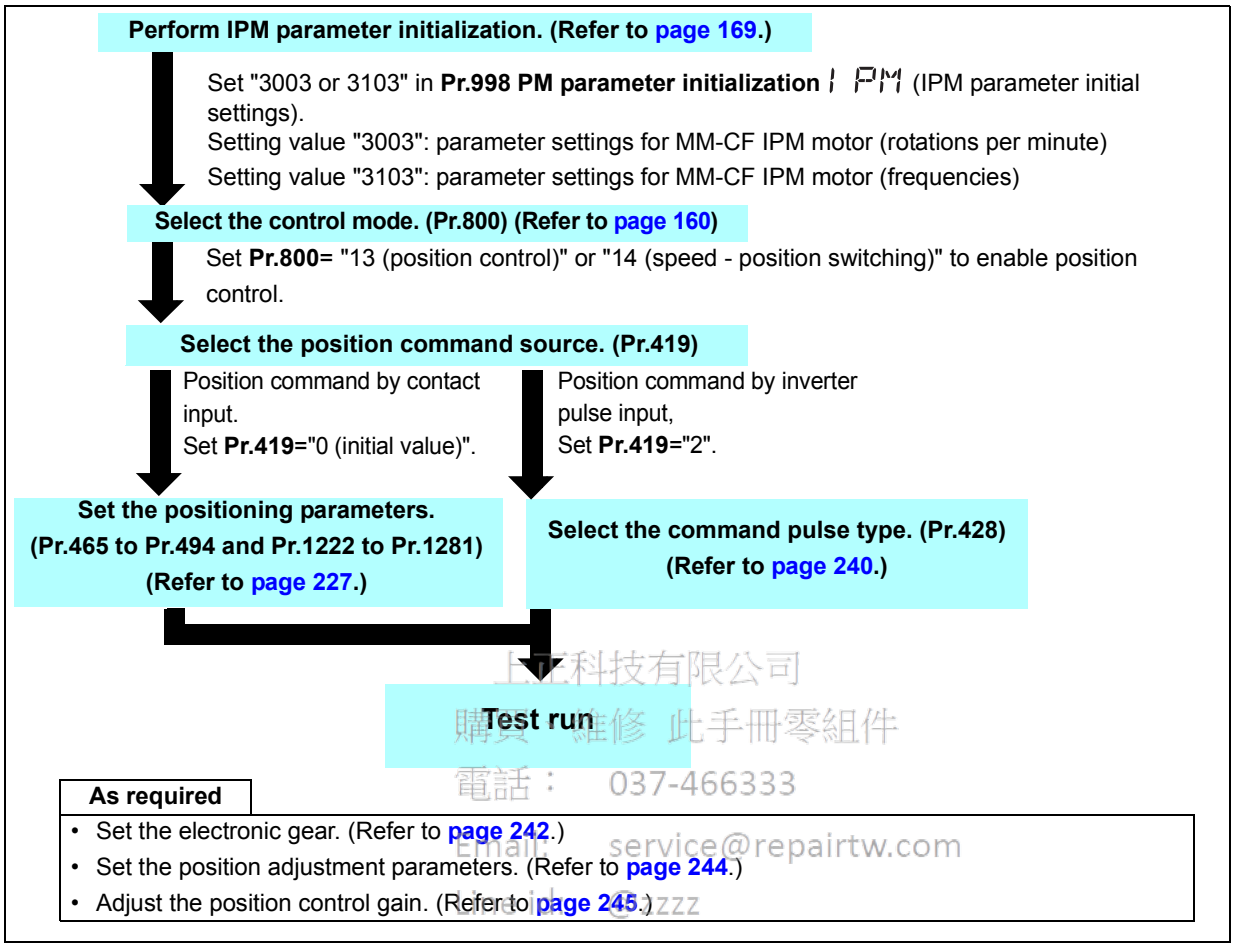

上正科技有限公司
購買 維修 此手冊零組件
電話： 037-466333
Email: service@repairtw.com
www.repairtw.com

REMARKS

- The carrier frequency is limited during PM sensorless vector control. (Refer to page 270.)
- Position deviation may occur due to motor temperature changes. In such case, shut off the inverter outputs, and restart.
- Perform position control under PM sensorless vector control only when using an MM-CF IPM motor with the low-speed high torque characteristic. (**Pr.788**="9999 (initial value)")
- Position control is performed on the assumption of 4096 pulses/motor rotation.
  The positioning accuracy is 200 pulses/rev for 1.5K or lower, and 100 pulses/rev for 2K or higher (under no load).

5.5.4 Simple positioning function by parameters

Vector PM

Set positioning parameters such as the number of pulses (position) and acceleration/deceleration time in advance to create a point table (point table method). Positioning operation is performed by selecting the point table.

Pr.	Name	Initial value	Setting range	Description
419 B000	Position command source selection	0	0	Simple position control by point tables (position command by setting parameters).
			2	Simple pulse train command by inverter pulse input.
464 B020	Digital position control sudden stop deceleration time	0 s	0 to 360 s	Set the time period until the inverter stops when the forward rotation (reverse rotation) command is turned OFF with the position feed forward function.
465 B021	First target position lower 4 digits	0	0 to 9999	Set the target position of point table 1.
466 B022	First target position upper 4 digits	0	0 to 9999	
467 B023	Second target position lower 4 digits	0	0 to 9999	Set the target position of point table 2.
468 B024	Second target position upper 4 digits	0	0 to 9999	
469 B025	Third target position lower 4 digits	0	0 to 9999	Set the target position of point table 3.
470 B026	Third target position upper 4 digits	0	0 to 9999	
471 B027	Fourth target position lower 4 digits	0	0 to 9999	Set the target position of the point table 4.
472 B028	Fourth target position upper 4 digits	0	0 to 9999	
473 B029	Fifth target position lower 4 digits	0	0 to 9999	Set the target position of the point table 5.
474 B030	Fifth target position upper 4 digits	0	0 to 9999	
475 B031	Sixth target position lower 4 digits	0	0 to 9999	Set the target position of the point table 6.
476 B032	Sixth target position upper 4 digits	0	0 to 9999	
477 B033	Seventh target position lower 4 digits	0	0 to 9999	Set the target position of the point table 7.
478 B034	Seventh target position upper 4 digits	0	0 to 9999	
479 B035	Eighth target position lower 4 digits	0	0 to 9999	Set the target position of the point table 8.
480 B036	Eighth target position upper 4 digits	0	0 to 9999	
481 B037	Ninth target position lower 4 digits	0	0 to 9999	Set the target position of the point table 9.
482 B038	Ninth target position upper 4 digits	0	0 to 9999	
483 B039	Tenth target position lower 4 digits	0	0 to 9999	Set the target position of the point table 10.
484 B040	Tenth target position upper 4 digits	0	0 to 9999	
485 B041	Eleventh target position lower 4 digits	0	0 to 9999	Set the target position of the point table 11.
486 B042	Eleventh target position upper 4 digits	0	0 to 9999	

上正科技有限公司
購買、維修 此手冊零組件
電話： 037-466333
Email: service@repairtw.com
Line id: @zzzz
www.repairtw.com

Position control under vector control and PM sensorless vector control

Pr.	Name	Initial value	Setting range	Description
487 B043	Twelfth target position lower 4 digits	0	0 to 9999	Set the target position of the point table 12.
488 B044	Twelfth target position upper 4 digits	0	0 to 9999	
489 B045	Thirteenth target position lower 4 digits	0	0 to 9999	Set the target position of the point table 13.
490 B046	Thirteenth target position upper 4 digits	0	0 to 9999	
491 B047	Fourteenth target position lower 4 digits	0	0 to 9999	Set the target position of the point table 14.
492 B048	Fourteenth target position upper 4 digits	0	0 to 9999	
493 B049	Fifteenth target position lower 4 digits	0	0 to 9999	Set the target position of the point table 15.
494 B050	Fifteenth target position upper 4 digits	0	0 to 9999	
1221 B101	Start command edge detection selection	0	0	Turning OFF the forward (reverse) rotation command will stop the motor in the setting time of **Pr.464**.
			1	Position forward is continued even if the forward (reverse) rotation command is turned OFF.
1222 B120	First positioning acceleration time	5 s	0.01 to 360 s	Set the characteristics of the point table 1.
1223 B121	First positioning deceleration time	5 s	0.01 to 360 s	
1224 B122	First positioning dwell time	0 ms	0 to 20000 ms	
1225 B123	First positioning sub-function	10	0, 1, 10, 11, 100, 101, 110, 111	
1226 B124	Second positioning acceleration time	5 s	0.01 to 360 s	Set the characteristics of the point table 2.
1227 B125	Second positioning deceleration time	5 s	0.01 to 360 s	
1228 B126	Second positioning dwell time	0 ms	0 to 20000 ms	
1229 B127	Second positioning sub-function	10	0, 1, 10, 11, 100, 101, 110, 111	
1230 B128	Third positioning acceleration time	5 s	0.01 to 360 s	Set the characteristics of the point table 3.
1231 B129	Third positioning deceleration time	5 s	0.01 to 360 s	
1232 B130	Third positioning dwell time	0 ms	0 to 20000 ms	
1233 B131	Third positioning sub-function	10	0, 1, 10, 11, 100, 101, 110, 111	
1234 B132	Fourth positioning acceleration time	5 s	0.01 to 360 s	Set the characteristics of the point table 4.
1235 B133	Fourth positioning deceleration time	5 s	0.01 to 360 s	
1236 B134	Fourth positioning dwell time	0 ms	0 to 20000 ms	
1237 B135	Fourth positioning sub-function	10	0, 1, 10, 11, 100, 101, 110, 111	

上正科技有限公司
購買、維修 此手冊零組件
電話： 037-466333
Email: service@repairtw.com
Line id: @zzzz
www.repairtw.com

Pr.	Name	Initial value	Setting range	Description
1238 B136	Fifth positioning acceleration time	5 s	0.01 to 360 s	Set the characteristics of the point table 5.
1239 B137	Fifth positioning deceleration time	5 s	0.01 to 360 s	
1240 B138	Fifth positioning dwell time	0 ms	0 to 20000 ms	
1241 B139	Fifth positioning sub-function	10	0, 1, 10, 11, 100, 101, 110, 111	
1242 B140	Sixth positioning acceleration time	5 s	0.01 to 360 s	Set the characteristics of the point table 6.
1243 B141	Sixth positioning deceleration time	5 s	0.01 to 360 s	
1244 B142	Sixth positioning dwell time	0 ms	0 to 20000 ms	
1245 B143	Sixth positioning sub-function	10	0, 1, 10, 11, 100, 101, 110, 111	
1246 B144	Seventh positioning acceleration time	5 s	0.01 to 360 s	Set the characteristics of the point table 7.
1247 B145	Seventh positioning deceleration time	5 s	0.01 to 360 s	
1248 B146	Seventh positioning dwell time	0 ms	0 to 20000 ms	
1249 B147	Seventh positioning sub-function	10	0, 1, 10, 11, 100, 101, 110, 111	
1250 B148	Eighth positioning acceleration time	5 s	0.01 to 360 s	Set the characteristics of the point table 8.
1251 B149	Eighth positioning deceleration time	5 s	0.01 to 360 s	
1252 B150	Eighth positioning dwell time	0 ms	0 to 20000 ms	
1253 B151	Eighth positioning sub-function	10	0, 1, 10, 11, 100, 101, 110, 111	
1254 B152	Ninth positioning acceleration time	5 s	0.01 to 360 s	Set the characteristics of the point table 9.
1255 B153	Ninth positioning deceleration time	5 s	0.01 to 360 s	
1256 B154	Ninth positioning dwell time	0 ms	0 to 20000 ms	
1257 B155	Ninth positioning sub-function	10	0, 1, 10, 11, 100, 101, 110, 111	
1258 B156	Tenth positioning acceleration time	5 s	0.01 to 360 s	Set the characteristics of the point table 10.
1259 B157	Tenth positioning deceleration time	5 s	0.01 to 360 s	
1260 B158	Tenth positioning dwell time	0 ms	0 to 20000 ms	
1261 B159	Tenth positioning sub-function	10	0, 1, 10, 11, 100, 101, 110, 111	

上正科技有限公司
購買、維修 此手冊零組件
電話： 037-466333
Email: service@repairtw.com
line id: @zzzz
www.repairtw.com

Position control under vector control and PM sensorless vector control

Pr.	Name	Initial value	Setting range	Description
1262 B160	Eleventh positioning acceleration time	5 s	0.01 to 360 s	Set the characteristics of the point table 11.
1263 B161	Eleventh positioning deceleration time	5 s	0.01 to 360 s	
1264 B162	Eleventh positioning dwell time	0 ms	0 to 20000 ms	
1265 B163	Eleventh positioning sub-function	10	0, 1, 10, 11, 100, 101, 110, 111	
1266 B164	Twelfth positioning acceleration time	5 s	0.01 to 360 s	Set the characteristics of the point table 12.
1267 B165	Twelfth positioning deceleration time	5 s	0.01 to 360 s	
1268 B166	Twelfth positioning dwell time	0 ms	0 to 20000 ms	
1269 B167	Twelfth positioning sub-function	10	0, 1, 10, 11, 100, 101, 110, 111	
1270 B168	Thirteenth positioning acceleration time	5 s	0.01 to 360 s	Set the characteristics of the point table 13.
1271 B169	Thirteenth positioning deceleration time	5 s	0.01 to 360 s	
1272 B170	Thirteenth positioning dwell time	0 ms	0 to 20000 ms	
1273 B171	Thirteenth positioning sub-function	10	0, 1, 10, 11, 100, 101, 110, 111	
1274 B172	Fourteenth positioning acceleration time	5 s	0.01 to 360 s	Set the characteristics of the point table 14.
1275 B173	Fourteenth positioning deceleration time	5 s	0.01 to 360 s	
1276 B174	Fourteenth positioning dwell time	0 ms	0 to 20000 ms	
1277 B175	Fourteenth positioning sub-function	10	0, 1, 10, 11, 100, 101, 110, 111	
1278 B176	Fifteenth positioning acceleration time	5 s	0.01 to 360 s	Set the characteristics of the point table 15.
1279 B177	Fifteenth positioning deceleration time	5 s	0.01 to 360 s	
1280 B178	Fifteenth positioning dwell time	0 ms	0 to 20000 ms	
1281 B179	Fifteenth positioning sub-function	10	0, 10, 100, 110	
1282 B180	Home position return method selection	4	0	Dog type
			1	Count type
			2	Data set type
			3	Stopper type
			4	Ignores the home position. (servo-ON position home position)
			5	Dog type back end reference
			6	Count type front end reference
1283 B181	Home position return speed	2 Hz	0 to 30 Hz	Set the speed for the home position return operation.
1284 B182	Home position return creep speed	0.5 Hz	0 to 10 Hz	Set the speed immediately before the home position return.

上正科技有限公司
購買、維修 此手冊零組件
電話：037-468393
Email: service@repairtw.com
Line id: @zzz
www.repairtw.com

Pr.	Name	Initial value	Setting range	Description
1285 B183	Home position shift amount lower 4 digits	0	0 to 9999	Set the home position shift distance. Home position shift distance = **Pr.1286** × 10000 + **Pr.1285**
1286 B184	Home position shift amount upper 4 digits	0	0 to 9999	
1287 B185	Travel distance after proximity dog ON lower 4 digits	2048	0 to 9999	Set the travel distance after detecting the proximity dog. Travel distance after the proximity dog = **Pr.1288** × 10000 + **Pr.1287**
1288 B186	Travel distance after proximity dog ON upper 4 digits	0	0 to 9999	
1289 B187	Home position return stopper torque	40%	0 to 200%	Set the activation level of torque limit operation for the stopper-type home position return.
1290 B188	Home position return stopper waiting time	0.5 s	0 to 10 s	Set the waiting time until home position return is started after the inverter detects the pressing status.
1292 B190	Position control terminal input selection	0	0	Sudden stop signal (X87) of normally open input (NO contact input)
			1	Sudden stop signal (X87) of normally closed input (NC contact input)
1293 B191	Roll feeding mode selection	0	0	Roll feed disabled
			1	Roll feed enabled

(1) Positioning by a point table (Pr.4 to Pr.6, Pr.24 to Pr.27, Pr.232 to Pr.239, Pr.465 to Pr.494, and Pr.1222 to Pr.1281)

- Create a the point table by setting the following parameters.

Point table	Position data [command side]		Maximum speed	Acceleration time	Deceleration time	Dwell time	Auxiliary function	Point table selection signal			
	Upper	Lower						REX	RH	RM	RL
1	Pr.466	Pr.465	Pr.4	Pr.1222	Pr.1223	Pr.1224	Pr.1225	OFF	ON	OFF	OFF
2	Pr.468	Pr.467	Pr.5	Pr.1226	Pr.1227	Pr.1228	Pr.1229	OFF	OFF	ON	OFF
3	Pr.470	Pr.469	Pr.6	Pr.1230	Pr.1231	Pr.1232	Pr.1233	OFF	OFF	OFF	ON
4	Pr.472	Pr.471	Pr.24	Pr.1234	Pr.1235	Pr.1236	Pr.1237	OFF	OFF	ON	ON
5	Pr.474	Pr.473	Pr.25	Pr.1238	Pr.1239	Pr.1240	Pr.1241	OFF	ON	OFF	ON
6	Pr.476	Pr.475	Pr.26	Pr.1242	Pr.1243	Pr.1244	Pr.1245	OFF	ON	ON	OFF
7	Pr.478	Pr.477	Pr.27	Pr.1246	Pr.1247	Pr.1248	Pr.1249	OFF	ON	ON	ON
8	Pr.480	Pr.479	Pr.232	Pr.1250	Pr.1251	Pr.1252	Pr.1253	ON	OFF	OFF	OFF
9	Pr.482	Pr.481	Pr.233	Pr.1254	Pr.1255	Pr.1256	Pr.1257	ON	OFF	OFF	ON
10	Pr.484	Pr.483	Pr.234	Pr.1258	Pr.1259	Pr.1260	Pr.1261	ON	OFF	ON	OFF
11	Pr.486	Pr.485	Pr.235	Pr.1262	Pr.1263	Pr.1264	Pr.1265	ON	OFF	ON	ON
12	Pr.488	Pr.487	Pr.236	Pr.1266	Pr.1267	Pr.1268	Pr.1269	ON	ON	OFF	OFF
13	Pr.490	Pr.489	Pr.237	Pr.1270	Pr.1271	Pr.1272	Pr.1273	ON	ON	OFF	ON
14	Pr.492	Pr.491	Pr.238	Pr.1274	Pr.1275	Pr.1276	Pr.1277	ON	ON	ON	OFF
15	Pr.494	Pr.493	Pr.239	Pr.1278	Pr.1279	Pr.1280	Pr.1281	ON	ON	ON	ON

上正科技有限公司
購買、維修 此手冊零組件
電話：037-466333
Email: service@repairtw.com
Line id: @zzzz
www.repairtw.com

(2) Position data settings

- Set the position feed length to **Pr.465 to Pr.494**.
- The feed length set to each point table is selected by multi-speed terminals (RH, RM, RL and REX).
- Under vector control with encoder, set the value calculated with the following formula as the position feed length: (encoder resolution × number of rotations × 4).
- For example, to stop the motor after 100 times of rotations using SF-V5RU,

  the value will be calculated with 2048 (pulse/r) × 100 (rotations per minute) × 4 (multiplier) = 819200 (feed length)

  To set 819200 as the first feed length, separate the number in to the upper and lower 4 digits as shown below.

  Pr.466 (upper) = 81 (decimal), **Pr.465** (lower) = 9200 (decimal)
- The position feed length of PM sensorless vector control is fixed at 4096 for each motor rotation.

(3) Acceleration/deceleration time

- Set the acceleration/deceleration time for parameters corresponding to each point table.
- The frequency that will be the basis of acceleration/deceleration time is **Pr.20 Acceleration/deceleration reference frequency**. However, 1 Hz/s is the minimum acceleration/deceleration rate (acceleration/deceleration frequency divided by acceleration/deceleration time). If the acceleration/deceleration rate is smaller than 1, the motor runs at 1 Hz/s or in the deceleration time.
- The maximum acceleration/deceleration time is limited at 360 s.
- During position control, acceleration/deceleration pattern is always the liner acceleration/deceleration, and the **Pr.29 Acceleration/deceleration pattern selection** setting is ignored.

(4) Setting the waiting (dwell) time

- Set the waiting (dwell) time which is the interval from the completion of the position command of a selected point table to the start of the position command of the next point table.
- Set the dwell time from 0 to 20000 ms for parameters corresponding to each point table.

(5) Auxiliary function setting

- Set the handling and operation methods of the position data in each point table.
- Set the auxiliary function for parameters corresponding to each point table.

Auxiliary function parameter setting	Sign (100s digit)	Command method (10s digit)	Operation method (1s digit)
0	Plus (0)	Absolute position command (0)	Individual (0)
1			Continuous (1)
10 (initial value)		Incremental position command (1)	Individual (0)
11			Continuous (1)
100	Minus (1)	Absolute position command (0)	Individual (0)
101			Continuous (1)
110		Incremental position command (1)	Individual (0)
111			Continuous (1)

上傳科技有限公司 購買/維修 此手冊其組件 電話: 037-[illegible] Email: service@repairtw.com Line id: @zzzz www.repairtw.com

- For the sign, select the sign of position data.
- For the command method, select the absolute position command or incremental position command. For the absolute position command, specify the distance from the home position. For the incremental position command, specify the distance from the current position command.
- Position commands cannot be received until the completion of the home position return.
- For the operation method, select individual or continuous. When continuous operation is selected, next point table is executed after a command has been executed. Set "individual" as the operation method for the point table that will be the last of the continuously operated point tables.
- Individual operation is only executed in the selected point table. The dwell time setting is disabled in individual operation.
- Continuous operation setting is not available for the point table 15 ("0, 10, 100 or 110" can be set to **Pr.1281**).

(6) Example 1 of positioning operation by point tables (automatic continuous positioning operation)

- The figure below shows an operation example when the following settings are made for point tables.

Point table	Target position		Maximum speed (Hz)	Acceleration time (s)	Deceleration time (s)	Dwell time (ms)	Auxiliary function
	Upper	Lower					
1	100	0	60	5	5	1000	1 (absolute position, continuous)
2	50	0	30	6	6	0	10 (incremental position, individual)

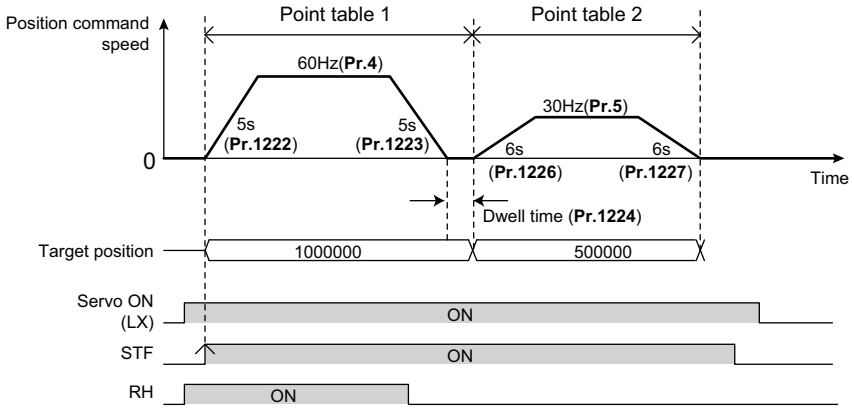

REMARKS

- During continuous operation, the operation moves on to the next table after the position command speed becomes 0.
- During continuous operation, no point table selection signal is received. Select the position feed length by point tables before turning ON the start command. Only the maximum frequency can be changed during operation. Position feed length cannot be switched.

上市科技有限公司
購買、維修 此手冊零組件
電話： 037-466333
Email: service@repairtw.com
Line id: @zzzz
www.repairtw.com

(7) Example 2 of positioning operation by point tables (variable speed operation)

- The maximum frequency can be changed during positioning operation. Use as many point tables as the number of maximum speeds to be set.
- The figure below shows an operation example when the following settings are made for point tables.

Point table	Target position		Maximum speed (Hz)	Acceleration time (s)	Deceleration time (s)	Dwell time (ms)	Auxiliary function
	Upper	Lower					
1	5	0	30	1	1	0	1 (absolute position, continuous)
2	3	0	20	Invalid	Invalid	0	11 (incremental position, individual)
3	10	0	10	Invalid	Invalid	0	1 (absolute position, continuous)
4	6	0	5	Invalid	Invalid	0	10 (incremental position, individual)

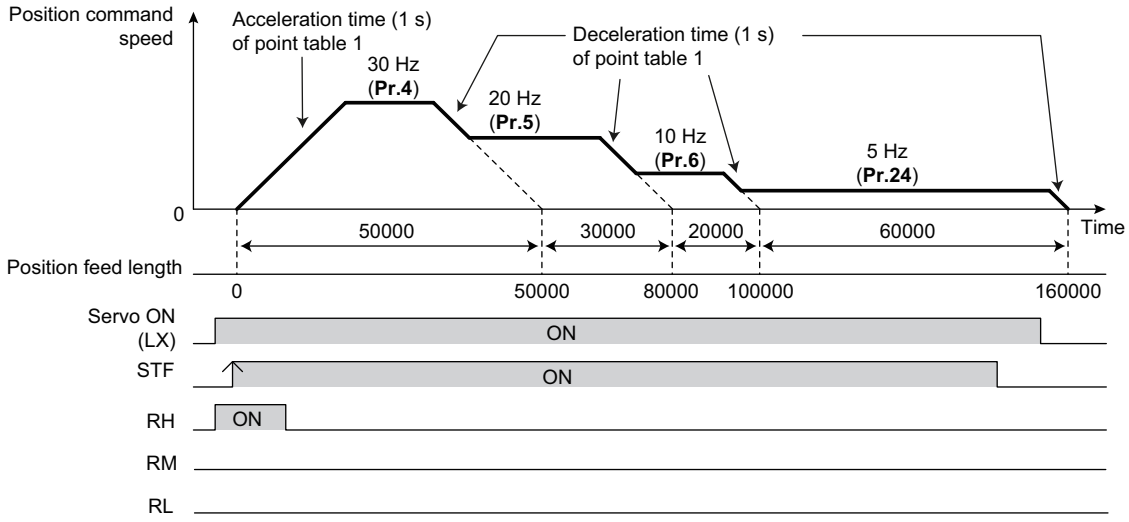

- Set "0" as the dwell time to perform variable speed operation.

(8) Return to home position during point table positioning

- Home position return is performed to match the command coordinates with the machine coordinates.
- The returned home position can be set as point 0, and positioning operation is available using this.
- Home position return procedure

1) Set parameters related to home position return.
   - Set the home position return method (**Pr.1282**).
   - Set the speed for home position return operation (**Pr.1283**).
   - Set the creep speed for home position return operation (**Pr.1284**).
   - Set the home position return shift amount if necessary (**Pr.1286** × 10000 + **Pr.1285**).
   - Set the post proximity dog travel distance if necessary (**Pr.1288** × 10000 + **Pr.1287**).
2) Turn OFF all point table selections.
   - Turn OFF all RH, RM, RL and REX signals.
3) Turn ON the Pre-excitation/servo ON (LX) signal.
4) Turn ON the start signal (STF or STR).
   - Home position return is performed according to the settings.

REMARKS

- The setting values of the point table 1 are used as acceleration/deceleration time.
- After turning ON the start signal, only the setting values of **Pr.1283 Home position return speed** or **Pr.1284 Home position return creep speed** can be changed.

(9) Selecting the home position return method (Pr.1282 to Pr.1288)

Pr.1282 Setting	Home position return method	Description
0	Dog type*1 Vector	Deceleration starts when the proximity dog signal is turned ON. For the home position after turn OFF of the proximity dog signal, the position specified by the first Z-phase signal or the position of the first Z-phase signal shifted by the home position shift amount (**Pr.1285**, **Pr.1286**) is used. 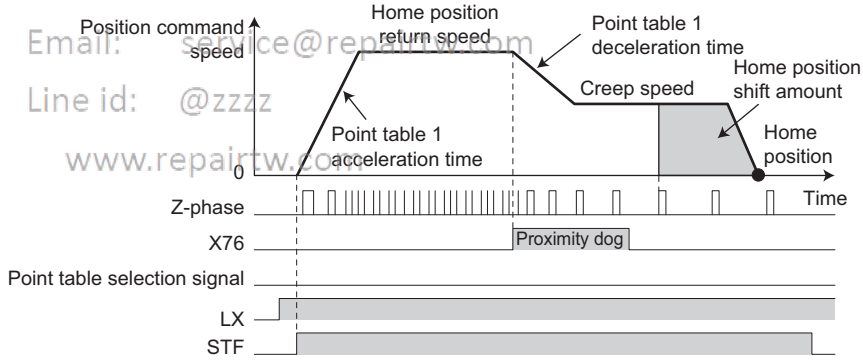
1	Count type*1 Vector	Deceleration starts when the proximity dog signal is turned ON. After the proximity dog, the motor travels the specified travel distance (**Pr.1287**, **Pr.1288**). Then, it uses the position specified by the the first Z-phase signal or position of the Z-phase signal shifted by the home position shift amount (**Pr.1285**, **Pr.1286**). 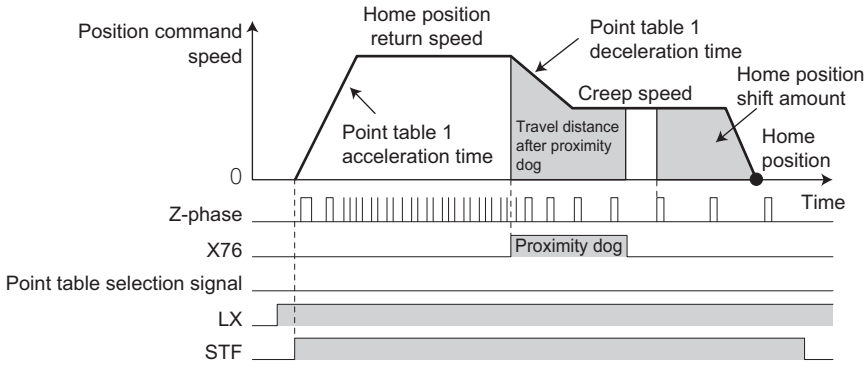

上正科技有限公司
購買、維修此手冊零組件
電話： 037-466333
Email: service@repairtw.com
Line id: @zzzz
www.repairtw.com

Pr.1282 Setting	Home position return method	Description
2	Data set type Vector PM	The position at which the start signal is input is used as the home position. 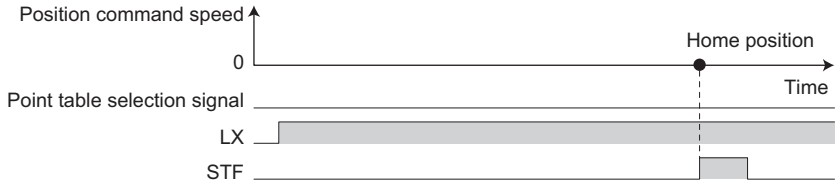
3	Stopper type Vector PM	A workpiece is pressed to a mechanical stopper, and the position where it is stopped is set as the home position. Pressing is confirmed when the estimated speed value has fallen blow **Pr.865 Low speed detection** for 0.5 s during activation of the torque limit operation. (While the stopper-type home position is performed, **Pr.1289 Home position return stopper torque** is applied.) After **Pr.1290 Home position return stopper waiting time** has passed after pressing is confirmed, the home position is shifted by the home position shift amount (**Pr.1285** and **Pr.1286**). After a position command is created and the absolute value of the droop pulse (after electronic gear) falls below the in-position width, the home position return is completed. 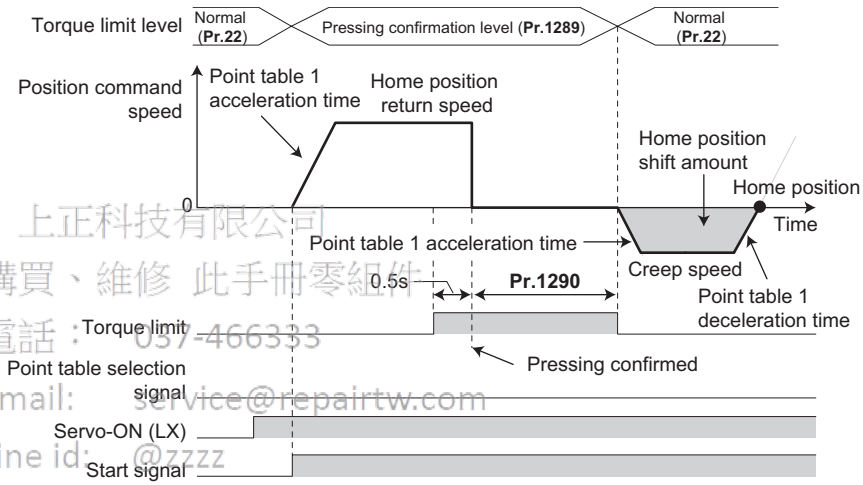
4 (initial value)	Ignore the home position (Servo ON position is the home position) Vector PM	The servo ON position is used as the home position. 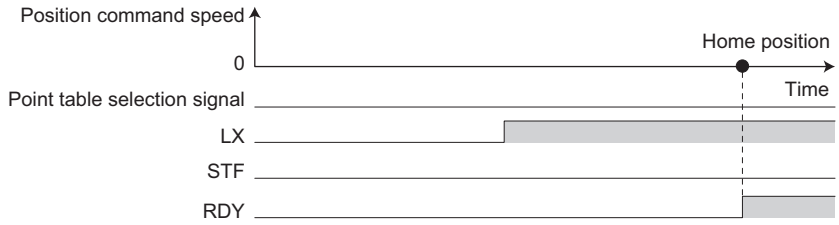

上正科技有限公司
購買、維修 此手冊零組件
電話：037-466333
Email: service@repairtw.com
Line id: @zzzz
www.repairtw.com

Pr.1282 Setting	Home position return method	Description
5	Dog type back end reference Vector PM	Deceleration starts at the front end of the proximity dog. After the back end is passed, the position is shifted by the post-dog travel distance and home position shift amount. The position after the shifts is set as the home position. Set pulses required for deceleration from the creep speed or more as the total of the post-dog travel distance and home position shift amount. 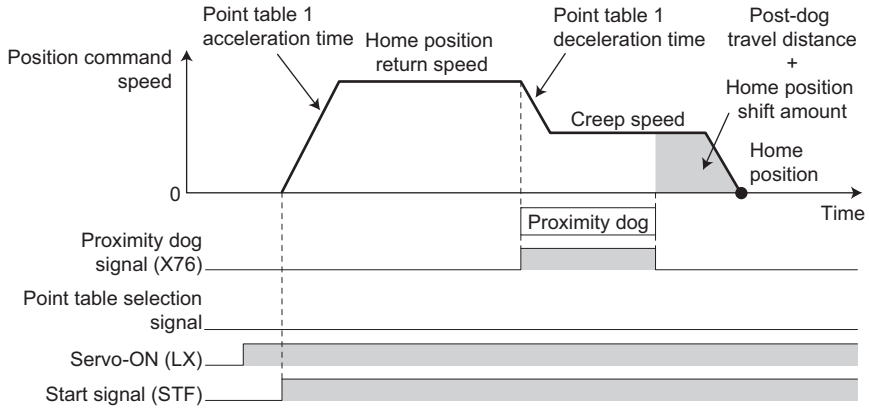
6	Count type front end reference Vector PM	Deceleration starts at the front end of the proximity dog, and the position is shifted by the post-dog travel distance and home position shift distance. The position after the shifts is set as the home position. Set pulses required for changing the speed from the home position speed to the creep speed or more as the total of the post-dog travel distance and home position shift amount. 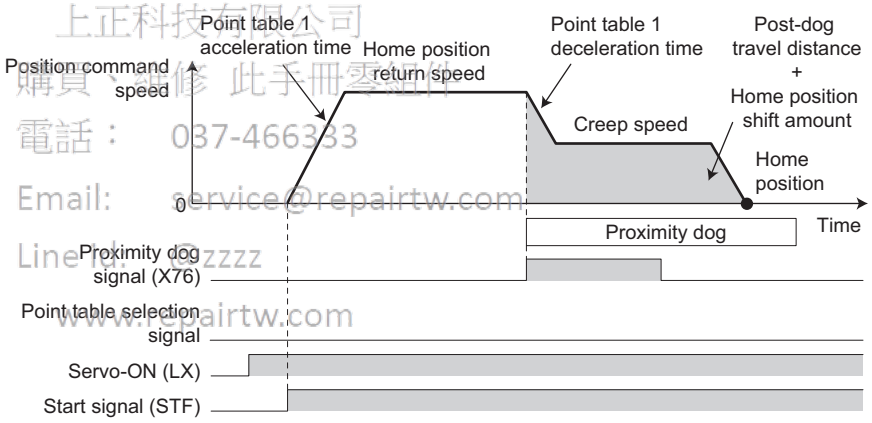

上正科技有限公司
購買 維修 此手冊零組件
電話： 037-466333
Email: service@repairtw.com
Line ID: @zzzz
www.repairtw.com

*1 If it is set under PM sensorless vector control, Home position return parameter setting error (HP3) occurs.

REMARKS

- Home position return automatic back-off function

  In a system that uses home position return with proximity dog, if the home position return is commanded while the motor is in a position within the proximity dog, the motor moves out of the proximity dog once, then starts deceleration to stop when it comes to the proximity dog again. The home position return is performed automatically after that.

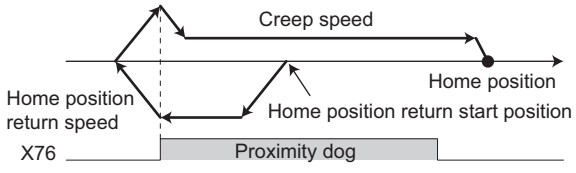

(10) Home position return warning

- If home position return is not normally completed, the following warnings appear on the operation panel.

Operation panel indication	Name	Cause
HP1	Home position return setting error	• The home position setting has failed.
HP2	Home position return uncompleted	• Start signal for the point table positioning has turned ON without completing the home position return. • The proximity dog signal is turned OFF when home position return is performed in the dog type or dog type back end reference during transition from the home position return speed to the creep speed. • The position command reached the post-dog travel distance when home position return is performed in the count type during transition from the home position return speed to the creep speed. • The position command reached the total of the post-dog travel distance and home position shift distance during deceleration from the creep speed after the proximity dog signal is turned OFF during home position return in the dog type back end reference. • The speed did not reach the creep speed during home position return in the count type with front end reference.
HP3	Home position return parameter setting error	• An unavailable home position return method is selected.

- The Home position return failure (ZA) signal is output while the home position return warning is occurring. To use the ZA signal, set "56 (positive logic) or 156 (negative logic)" in any of **Pr.190 to Pr.196 (Output terminal function selection)** to assign the function.

上正科技有限公司
購買、維修 此手冊零組件
電話： 037-466333
Email: service@repairtw.com
line id: @zzzz
www.repairtw.com

(11) Sudden stop (Pr.464, Pr.1221 and X87 signal)

- The operation performed during STF(STR)-OFF can be selected with **Pr.1221 Start command edge detection selection**.
- If STF(STR) is turned OFF during positioning or home position returning when **Pr.1221**="0 (initial value)" is set, it stops in the time set as **Pr.464 Digital position control sudden stop deceleration time**.

When **Pr.1221**="0 (initial value)" is set

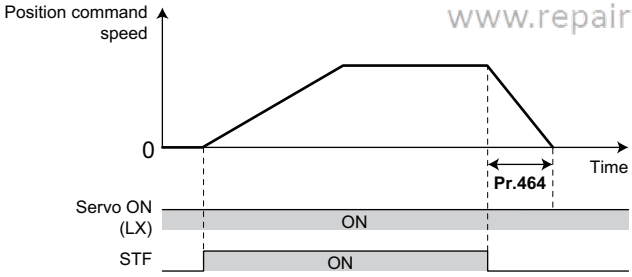

When **Pr.1221**="1" is set

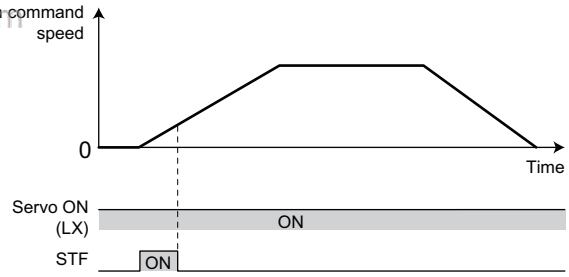

- Turning ON the Sudden stop signal (X87) during positioning operation or home position return operation, the motor stops in the setting time of **Pr.464**. For the X87 signal, set "87" in any of **Pr.178 to Pr.189 (input terminal function selection)** to assign the function to a terminal.

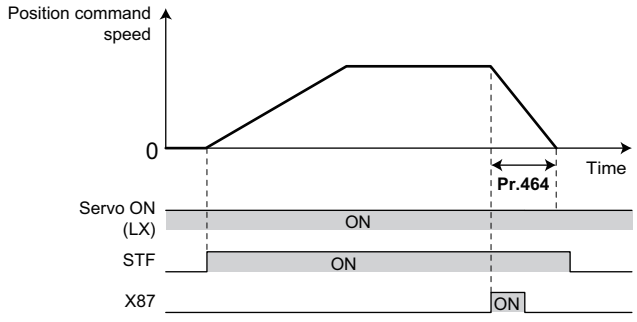

- The input logic of the X87 signal can be set using **Pr.1292 Position control terminal input selection**.

Pr.1292 setting	Input logic (X87)
0 (initial value)	Normally open input (NO contact input specification)
1	Normally closed input (NC contact input specification)

REMARKS

- When deceleration time longer than the normal deceleration time (including **Pr.1223**) is set in **Pr.464**, the normal deceleration time is applied to stop.
- The X87 signal is effective during position control JOG operation.

(12) Roll feed mode (Pr.1293)

- If the roll feed mode is enabled in an application that needs repeated positioning in the same direction, such as a conveyor, positioning can be performed repeatedly without position command overflow.
- When the roll feed mode is enabled (**Pr.1293**="1"), the position where the first position command is created is set as the home position and the droop pulses are cleared.
  When **Pr.1293**="1", simple positioning is available even if home position return cannot be completed.
- Positioning modes with which the roll feed mode can be enabled:
  -Point table mode
  -Home position return mode
  -JOG mode
- Basic operation example

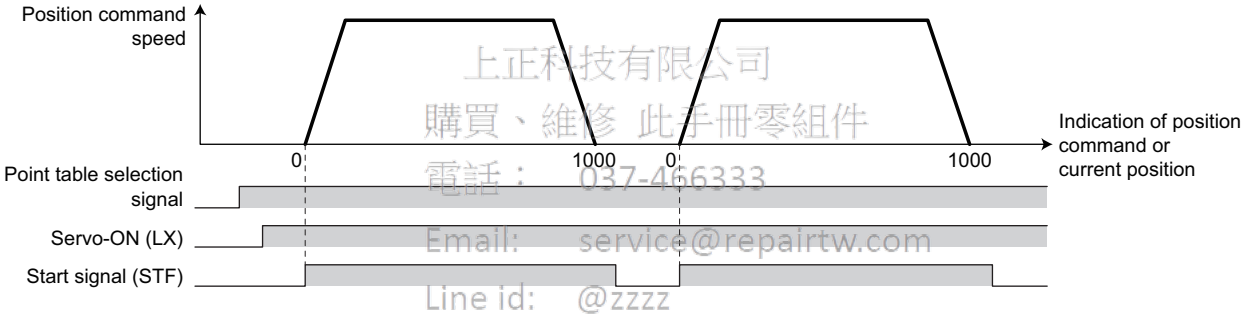

上正科技有限公司
購買、維修 此手冊零組件
電話： 037-466333
Email: service@repairtw.com
Line id: @zzzz
www.repairtw.com

(13) Input/output signals for point table positioning

Input/ output	Signal name		Function	Pr.178 to Pr.189 setting	Pr.190 to Pr.196 setting	
					Positive logic	Negative logic
Input	X76	Proximity dog	ON: dog ON OFF: dog OFF	76	—	
	X87	Sudden stop	When turned ON, the motor decelerates and stops according to **Pr.464**.	87	—	
Output	MEND	Travel completed	Turns ON when the position command operation has completed while the number of droop pulses is within the positioning completion width.	—	38	138
	ZA	Home position return failure	Turns ON while the home position return warning occurs.	—	56	156
	PBSY	During position command opeartion	Turns ON during position command operation.	—	61	161
	ZP	Home position return completed	Turns ON after home position return operation is complete.	—	63	163

• Output signal operation during positioning with point tables

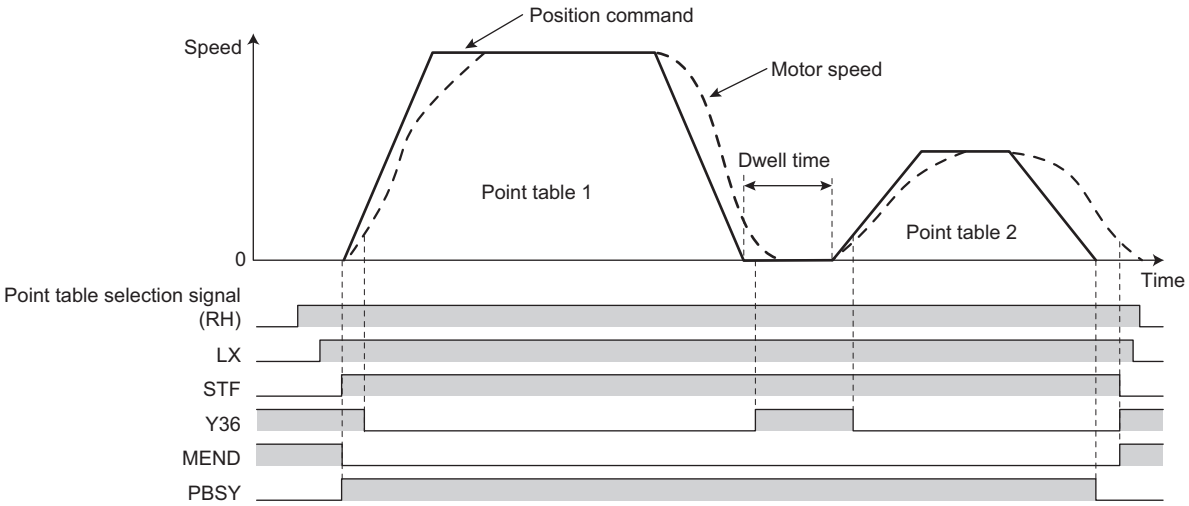

• Output signal operation during positioning with home position return

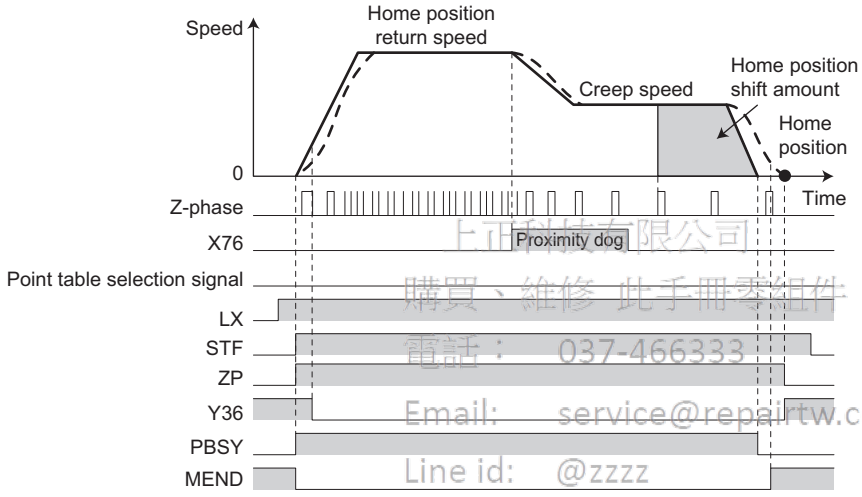

上正精密有限公司
購買、維修 此手冊零組件
電話： 037-466333
Email: service@repairtw.com
Line id: @zzzz
www.repairtw.com

♦ Parameters referred to ♦

Pr.20 Acceleration/deceleration reference frequency ☞ page 278
Pr.29 Acceleration/deceleration pattern selection ☞ page 283

5.5.5 Position control by inverter pulse train input

Vector PM

The simple position pulse train command can be input by pulse train input and sign signal (NP) to the JOG terminal.

Pr.	Name	Initial value	Setting range	Description	
419 B000	Position command source selection	0	0	Simple position control by point tables (position command by setting parameters).	
			2	Simple pulse train command by inverter pulse input.	
428 B009	Command pulse selection	0	0 to 2	Pulse train + rotation direction sign	Negative logic
			3 to 5		Positive logic
429 B010	Clear signal selection	1	0	The deviation counter is cleared at the edge when the clear (CLR) signal is switched from OFF to ON.	
			1	The deviation counter is cleared while the clear (CLR) signal is turned ON.	
430 B011	Pulse monitor selection	9999	0 to 5, 100 to 105, 1000 to 1005, 1100 to 1105	Shows the various pulse conditions during operation as the number of pulses.	
			8888, 9999	Shows the frequency monitor.	

Position control under vector control and PM sensorless vector control

(1) Operation outline

- If the Pre-excitation/servo ON (LX) signal is turned ON, output shutoff is canceled and the Position control preparation ready (RDY) signal is turned ON after 0.1 s. When STF (forward stroke end signal) or STR (reverse stroke end signal) is turned ON, the motor rotates according to the command pulse. When the forward (reverse) stroke end signal is turned OFF, the motor does not rotate in the corresponding direction.

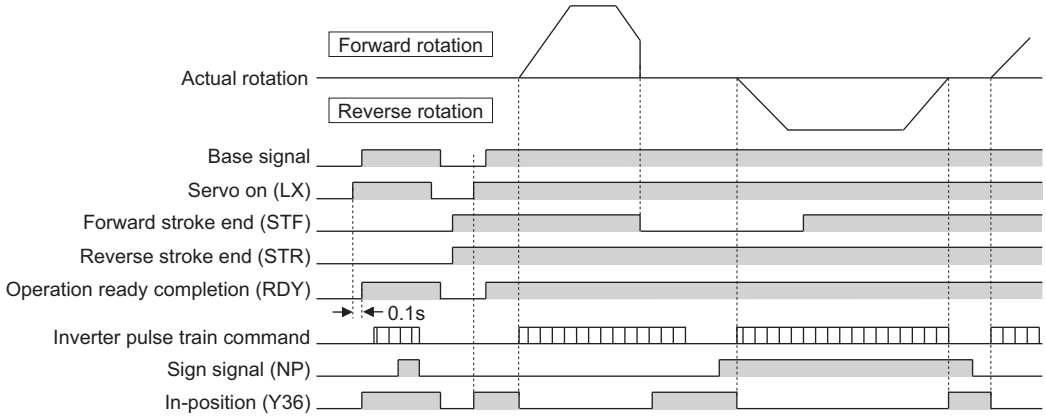

(2) Selecting the pulse train type (Pr.428 and NP signal)

- Set **Pr.419 Position command source selection**="2" (simple pulse train position command).
- Set "68" in any of **Pr.178 to Pr.189 (selection of the input terminal function)** to assign Simple position pulse train sign (NP).
- Select the command pulse train with **Pr.428 Command pulse selection**.

Pr.428 setting	Command pulse train type		During forward rotation	During reverse rotation
0 to 2	Negative logic	Pulse train + rotation direction sign	JOG, NP: L / H	
3 to 5	Positive logic	Pulse train + rotation direction sign	JOG, NP: H / L	

工正科技有限公司 購買・維修 此手冊零組件 電話：037-466333 Email: service@repairtw.com Line id: @zzzz www.repairtw.com

- Select vector control or PM sensorless vector control to select the position control method.

REMARKS

- If **Pr.419**= "2" (simple pulse train position command) is set, the terminal JOG is used for the simple position pulse train input regardless of the **Pr.291 Pulse train I/O selection** pulse train input/output selection setting.

(3) Clear signal selection (Pr.429, CLR signal)

- This function is useful to reset the number of droop pulses to 0 when home position return is performed.
- If the simple position droop pulse clear (CLR) signal is turned ON when **Pr.429 Clear signal selection** (clear signal selection)= "0", the deviation counter is cleared at the edge of the signal. The Simple position droop pulse clear CLR signal is also turned ON in synchronization with the zero pulse signal of the encoder such as the home position return signal, and the deviation counter is cleared.
- For a terminal used for the CLR signal, set "69" in any of **Pr.178 to Pr.189 (input terminal function selection)** to assign the function.

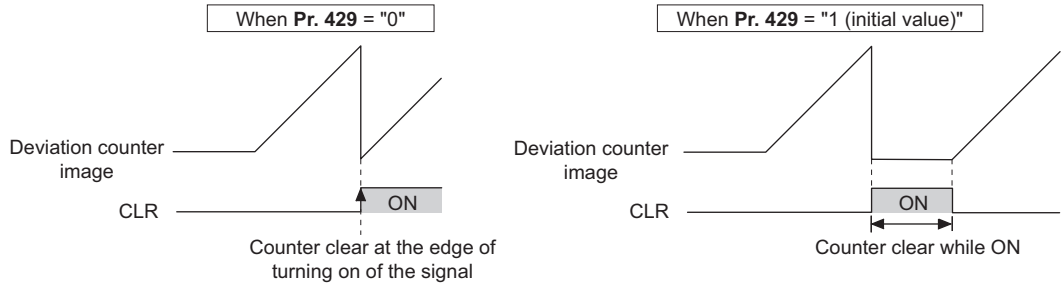

(4) Pulse monitor selection (Pr.430)

- Shows the various pulse conditions during operation as the number of pulses. Set "0" in **Pr.52 Operation panel main monitor selection** to display the output frequency monitor.
- If any of "26 to 31" is set in **Pr.52**, **Pr.774 to Pr.776**, and **Pr.992**, the electronic gear operation setting for the pulse monitor by the multifunction monitor can be changed. (Refer to page 346)

Pr.430 setting	Description	
□□□0	Pulse monitor selection	Displays the lower of the position command (accumulated value of command pulses).
□□□1		Displays the upper of the position command (accumulated value of command pulses).
□□□2		Displays the lower of the current position (accumulated value of feedback pulses*1).
□□□3		Displays the upper of the current position (accumulated value of feedback pulses*1).
□□□4		Displays the lower of the accumulated value of droop pulses.
□□□5		Displays the upper of the accumulated value of droop pulses.
□0□□	For pulse monitor selection	Displays the monitor item selected in the pulse monitor selection after the electronic gear operation.
□1□□		Displays the monitor item selected in the pulse monitor selection before the electronic gear operation.
0□□□	For multifunction monitor	Displays the monitor item selected in the multifunction monitor (position command, current position, and droop pulse) before the electronic gear operation.
1□□□		Displays the monitor item selected in the multifunction monitor (position command, current position, and droop pulse) after the electronic gear operation.
8888	Output frequency display	Displays the monitor item selected in the multifunction monitor (position command, current position, and droop pulse) after the electronic gear operation.
9999 (initial value)		Displays the monitor item selected in the multifunction monitor (position command, current position, and droop pulse) before the electronic gear operation.

*1 Accumulated value of estimated feedback pulses when PM sensorless vector control is used

上正科技有限公司
購買、維修 此手冊零組件
電話： 037 466333
Email service@repairtw.com
Line id @3333
www.repairtw.com

(5) The pulse monitor of the operation panel (FR-DU08)

- The position command, current position and the status of droop pulses can be displayed on the operation panel.
- If displayed data has signs, minus signs appear for both upper and lower digits.
- If -99999999 or 99999999 is exceeded on the pulse monitor, the monitor value is reset to 0.

Display data		Monitor display without signs	Monitor display with signs
-10000	Lower monitor	0000	-0000
	Upper monitor	1	- 1
-100	Lower monitor	100	- 100
	Upper monitor	0	- 0

REMARKS

- The pulse count starts at servo on.
- The accumulated number of pulses is cleared at base shutoff or when the CLR signal is turned ON.
- Changing the terminal assignment using **Pr.178 to Pr.189 (input terminal function selection)** may affect the other functions. Set parameters after confirming the function of each terminal.

♦ Parameters referred to ♦

Pr.52 Operation panel main monitor selection ☞ page 346
Pr.178 to Pr.189 (input terminal function selection) ☞ page 416

5.5.6 Electronic gear setting Vector PM

Set the gear ratio between the machine gear and motor gear.

Pr.	Name	Initial value	Setting range	Description
420 B001	**Command pulse scaling factor numerator (electronic gear numerator)**	1	1 to 32767	Set the electronic gear. **Pr.420** is the numerator and **Pr.421** is the denominator.
421 B002	**Command pulse multiplication denominator (electronic gear denominator)**	1	1 to 32767	
424 B005	**Position command acceleration/deceleration time constant**	0 s	0 to 50 s	Use it when the rotation is not smooth because the electronic gear ratio is large (10 times or larger) and the rotation speed is slow.

(1) Gear ratio calculation (Pr.420, Pr.421)

- The position resolution (travel distance per pulse $\Delta\ell$ [mm]) is the travel distance per motor rotation Δs [mm] and the feedback pulse of the detector.
  It is determined by Pf [pulse/rev] and represented with the following formula.

$$\Delta\ell = \frac{\Delta s}{Pf}$$

$\Delta\ell$: Travel distance per pulse [mm]
Δs: Travel distance in one motor rotation [mm]
pf: Number of feedback pulses [pulse/rev] (the number of pulses after the number encoder pulses is quadruplicated)

The travel distance in 1 command pulse can be separately specified with a parameter and so an integer can be set as the travel distance in 1 command pulse.

$$\Delta\ell = \frac{\Delta s}{Pf} \times \frac{\mathbf{Pr.420}}{\mathbf{Pr.421}}$$

The following formula shows the relationship between the motor speed and internal command pulse frequency.

$$fo \times \frac{\mathbf{Pr.420}}{\mathbf{Pr.421}} = Pf \times \frac{No.}{60}$$

fo: internal command pulse frequency [pps]
No: motor rotation speed [r/min]

上正科技有限公司
購買、維修 此手冊零組件
電話： 037-466333
Email: service@repairtw.com
Line id: @zzzz
www.repairtw.com

REMARKS

- Set the electronic gear ratio in the range of 1/50 to 20. Note that, if the setting value is too small, the speed command will also be too small; while if it is too large, the speed ripple will be too large.

[Setting example 1]
In a driving system whose ball screw pitch is PB=10 (mm) and the reduction ratio is 1/n=1, the electronic gear ratio is Δs=10 (mm) when Δℓ=0.01 (mm) and Pf=4000 (pulses/rev) is set as the number of feedback pulses. Based on this, use the following formula:

$$\Delta\ell = \frac{\Delta s}{Pf} \times \frac{\textbf{Pr.420}}{\textbf{Pr.421}}$$

$$\frac{\textbf{Pr.420}}{\textbf{Pr.421}} = \Delta\ell \times \frac{Pf}{\Delta s}$$

$$= 0.01 \times \frac{4000}{10} = \frac{4}{1}$$

Thus, set the parameters as follows: **Pr.420**="4", **Pr.421**="1".

[Setting example 2]
Find the internal command pulse frequency for the rated motor speed of the dedicated motor.
However, the command pulse ratio is **Pr.420**/**Pr.421**="1".
If the number of encoder pulses is 2048 (pulses/rev), (feedback pulse pf = 2048 × 4)

$$fo = 2048 \times 4\ (\text{multiplication}) \times \frac{No.}{60} \times \frac{\textbf{Pr.421}}{\textbf{Pr.420}}$$

$$= 204800$$

The internal command pulse will be 204800 (pps) in accordance with the above formula.

上正科技有限公司
購買/維修此手冊零組件
電話： 037-466333
Email: service@repairtw.com
Line Id: @2222
www.repairtw.com

Relationship between the position resolution Δℓ and system accuracy
The system accuracy (the positioning accuracy of the machine) is the sum of electric deviation and mechanical deviation. Normally try to prevent the total deviation from being affected by the electronic deviation. Refer to the following relationship as a reference.

$$\Delta\ell < \left(\frac{1}{5} \text{ to } \frac{1}{10}\right) \times \Delta\varepsilon$$

Δε: positioning accuracy

<Motor stop characteristics>
When running the motor by parameter settings, the relationship between the internal command pulse frequency and the number of motor rotations will be as shown in Figure page 224. Pluses as much as the motor speed delay are accumulated in the deviation counter. These pulses are called droop pulses (ε). The relationship between the command frequency (fo) and position loop gain (Kp:**Pr.422**) is shown in the following formula.

$$\varepsilon = \frac{fo}{Kp}\ [\text{pulse}] \qquad \varepsilon = \frac{204800}{25}\ [\text{pulse}]\ (\text{with the rated motor speed})$$

The number of droop pulses (ε) will be 8192 with the initial value Kp = 25 s^{-1}.

Since the inverter has droop pulses during operation, a stop settling time (ts), which is the time between the zero command output and the motor stop, is required. Set the operation pattern taking into the account the stop setting time.

$$ts = 3 \times \frac{1}{Kp}\ [s]$$

The stop settling time (ts) will be 0.12 s for the initial value Kp=25 s^{-1}.
The accuracy of positioning Δε will be (5 to 10) × Δℓ=Δε [mm]

(2) Position command constant value during acceleration/deceleration (Pr.424)

- If the electronic gear ratio is large (1:10 or larger) and the rotation speed is slow, the rotation is not smooth and the rotation shape becomes like a pulse. Set this option in such a case to smoothen the rotation.

- If the command pulse frequency varies rapidly when no acceleration time can be assigned to the command pulse, overshoot or excessive error alarms may occur. Set this option in such a case to set the acceleration/deceleration time. Normally it is set to 0.

♦ Parameters referred to ♦

Pr.422 Position control gain ☞ page 245

5.5.7 Position adjustment parameter settings

Vector PM

Pr.	Name	Initial value	Setting range	Description
426 B007	**In-position width**	100 pulses	0 to 32767 pulses	Set the number of droop pulses that triggers the In-position (Y36) signal.
427 B008	**Excessive level error**	40K	0 to 400K	Set the number droop pulses that activates Excessive position fault (E.OD).
			9999	Function invalid
1294 B192	**Position detection lower 4 digits**	0	0 to 9999	Set the lower four digits of the position detection value.
1295 B193	**Position detection upper 4 digits**	0	0 to 9999	Set the upper four digits of the position detection value.
1296 B194	**Position detection selection**	0	0	The position is detected at both the plus side and minus side.
			1	The position is detected at the plus side only.
			2	The position is detected at the minus side only.
1297 B195	**Position detection hysteresis width**	0	0 to 32767	Set the hysteresis width for the detection position of the position detected signal (FP signal).

上正科技有限公司
購買、維修 此手冊零組件
電話： 037-466333
email: service@repairtw.com
www.repairtw.com

(1) In-position width (Pr.426, Y36 signal)

- The Y36 signal is used as the in-position signal.
- If the number of droop pulses is equal to or smaller than the **Pr.426** setting value, the In-position (Y36) signal turns ON.
- To use the Y36 signal, set "36 (positive logic) or 136 (negative logic)" in any of **Pr.190 to Pr.196 (output terminal function selection)** to assign the function.

(2) Excessive error level (Pr.427)

- If the number of droop pulses exceeds the **Pr.427** setting, a position error is detected, Excessive position fault (E.OD) is activated and the inverter output is shut off. Increase the error threshold level when a small value is set as the Position control gainsetting value. Set a small value for early detection even when the load is heavy.
- If **Pr.427**="9999" is set, E.OD is not activated regardless of the amount of droop pulses.

(3) Position detected signal (Pr.1294 to Pr.1297, FP signal)

- The position detected signal (FP signal) is turned ON when the current position [before the electronic gear] exceeds the position detection (**Pr.1295** × 10000 + **Pr.1294**). For the position detected signal (FP signal), assign the function by setting "60 (positive logic) or 160 (negative logic)" in any of **Pr.190 to Pr.196 (output terminal function selection)**.
- Whether the position detection is determined at a plus position or minus position can be selected by **Pr.1296 Position detection selection**. When "0" is set, the position is detected at both the plus side and minus side. When "1" is set, the position is detected at the plus side only. When "2" is set, the position is detected at the minus side only.

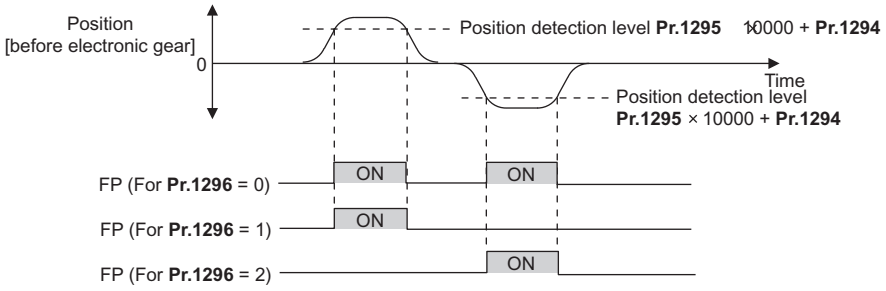

- When a current position varies, the position detected signal may repeat ON/OFF (chatter). Setting hysteresis to the detected position prevents chattering of the signal. Use **Pr.1297 Position detection hysteresis width** to set a hysteresis width.

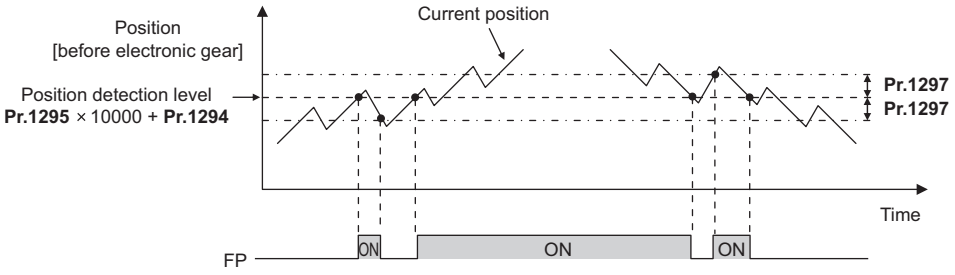

5.5.8 Position control gain adjustment Vector PM

Easy gain tuning is provided as an easy tuning method. For details about easy gain tuning, refer to page 188.
If it does not produce any effect, make fine adjustments by using the following parameters.
Set "0" to **Pr.819 Easy gain tuning selection** before setting the following parameters.

Pr.	Name	Initial value	Setting range	Description
422 **B003**	**Position control gain**	25 s^{-1}	0 to 150 s^{-1}	Set the gain for the position loop.
423 **B004**	**Position feed forward gain**	0%	0 to 100%	Function to cancel a delay caused by the droop pulses in the deviation counter.
425 **B006**	**Position feed forward command filter**	0 s	0 to 5 s	Input the first delay filter for the feed forward command.
446 **B012**	**Model position control gain**	25 sec^{-1}	0 to 150 sec^{-1}	Set the gain for the model position controller.
828 **G224**	**Model speed control gain**	60%	0 to 1000%	Set the gain for the model speed controller.
877 **G220**	**Speed feed forward control/model adaptive speed control selection**	0	0, 1	Perform position feed forward control.
			2	Model adaptive position control becomes valid.
880 **C114**	**Load inertia ratio**	7-fold	0 to 200-fold	Set the load inertia ratio for the motor.

上正科技有限公司
購買、維修 此手冊零組件
電話： 037-466333
Email: service@repairtw.com
Line id: @zzzz
www.repairtw.com

(1) Position loop gain (Pr.422)

- Make adjustment when any of such a phenomena as unusual vibration, noise and overcurrent of the motor/machine occurs.
- Increasing the setting improves traceability for the position command and also improves servo rigidity at a stop, but oppositely makes an overshoot and vibration more liable to occur.
- Normally set this parameter within the range about 5 to 50.

Movement • condition	How to adjust Pr.422
Response is slow.	Increase the setting value. Increase the setting value by 3 s^{-1} until immediately before an overshoot, stop-time vibration or other instable phenomenon occurs, and set about 80 to 90% of that value.
Overshoot, stop-time vibration or other instable phenomenon occurs.	Lower the setting value. Lower the setting value by 3 s^{-1} until immediately before an overshoot, stop-time vibration or other instable phenomenon does not occur, and set about 80 to 90% of that value.

(2) Position feed forward gain (Pr.423)

- This function is designed to cancel a delay caused by the droop pulses in the deviation counter. Set this parameter when the position response is not enough with **Pr.422** set.
- When a tracking delay for command pulses poses a problem, increase the setting gradually and use this parameter within the range where an overshoot or vibration will not occur.
- This function has no effects on servo rigidity at a stop.
- Normally set this parameter to 0.
- When setting **Pr.423**, set **Pr.877**="0 or 1" to enable position feed forward control.

(3) Model adaptive position control (Pr.446)

- Set each response for position commands and for load and external disturbances individually.
- Set this parameter when the position response is not enough with **Pr.422** set.
- When setting **Pr.446**, set **Pr.877**="2" to enable the model adaptive position control, **Pr.828 Model speed control gain**≠"0", and a load inertia ratio in **Pr.880 Load inertia ratio**.
- Set a small value in **Pr.446** first, and then increase the setting gradually and use this parameter within the range where an overshoot or vibration will not occur.

5.5.9 Troubleshooting in position control Vector PM

	Condition	Cause	Countermeasure
1	The motor does not rotate.	• There is incorrect phase sequence between the motor wiring and encoder wiring.	• Check the wiring. (Refer to page 66.)
		• Control mode selection setting **Pr.800 Control method selection** is not appropriate.	• Check the **Pr.800** setting. (Refer to page 160.)
		• No servo ON or stroke end signals (STF/STR) are input.	• Check if a signal is properly input.
		• A command pulse or position pulse sign (NP) is not correctly input.	• Check if the command pulse is properly input. (check the accumulated value for command pulses in **Pr.430 Pulse monitor selection**). • Check the command pulse type in **Pr.428 Command pulse selection**. • Check that the position pulse sign (NP) is assigned to an input terminal. (inverter pulse input)
		• The setting in **Pr.419 Position command source selection** (position command source selection) is not correct.	• Check the position command source selection in **Pr.419**.
		• When simple position control by a point table (**Pr.419**= "0") is used , the position feed length set by **Pr.465** to **Pr.494** is not correct.	• Check the position feed length in **Pr.465 to Pr.494**.
2	The position is unfavorably shifted.	• A command pulse is not correctly input.	• Check the command pulse type in **Pr.428 Command pulse selection**. • Check if the command pulse is properly input. (check the accumulated value of command pulses in **Pr.430**) • Check that the position pulse sign (NP) is assigned to an input terminal. (inverter pulse input)
		• The command is affected by noise. Noise is superpositioned on the encoder feedback signals.	• Set **Pr.72 PWM frequency selection** lower. • Change the earthing (grounding) position of the shielded cable. Alternatively, do not connect it.
3	Hunting occurs in the motor or the machine.	• Position loop gain is too high.	• Set **Pr.422 Position control gain** lower.
		• Speed loop gain is too high.	• Perform easy gain tuning. • Set **Pr.820 Speed control P gain 1** lower and **Pr.821 Speed control integral time 1** higher.
4	Machine movement is unstable.	• Acceleration/deceleration time settings are affecting adversely.	• Set **Pr.7 Acceleration time** and **Pr.8 Deceleration time** lower.

台電科技有限公司 購買、維修 此手冊零組件 電話： 037-466333 Email: service@repairtw.com Line id: @zzzz www.repairtw.com

(1) Flowcharts

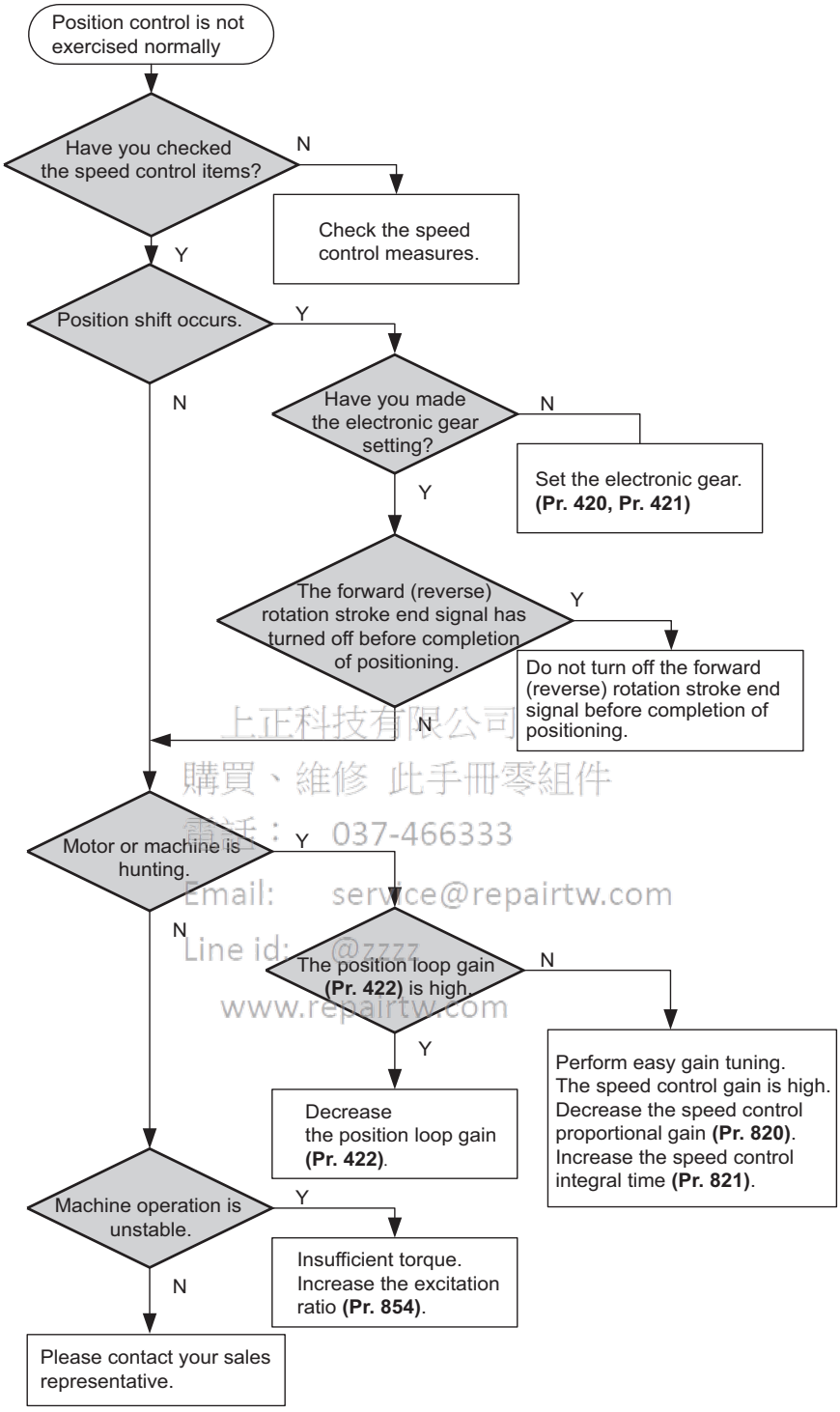

上正科技有限公司
購買、維修 此手冊零組件
電話：037-466333
Email: service@repairtw.com
Line id: @zzzz
www.repairtw.com

REMARKS

- The speed command of position control is related to speed control. (Refer to page 174.)

♦ Parameters referred to ♦

Pr.7 Acceleration time ☞ page 278
Pr.8 Deceleration time ☞ page 278
Pr.72 PWM frequency selection ☞ page 270
Pr.800 Control method selection ☞ page 160
Pr.802 Pre-excitation selection ☞ page 584
Pr.819 Easy gain tuning selection ☞ page 188
Pr.820 Speed control P gain 1 ☞ page 188
Pr.821 Speed control integral time 1 ☞ page 188

5.6 Real sensorless vector control, vector control, PM sensorless vector control adjustment

Purpose	Parameter to set			Refer to page
To stabilize speed and torque feedback signal.	Speed detection filter Torque detection filter	P.G215, P.G216, P.G315, P.G316	Pr.823, Pr.827, Pr.833, Pr.837	248
To changes excitation ratio	Excitation ratio	P.G217	Pr.854	249

5.6.1 Speed detection filter and torque detection filter Sensorless Vector PM

Set the time constant of primary delay filter for speed feedback signal and torque feedback signal.
Speed loop response is reduced. Under ordinary circumstances, therefore, use the initial value as it is.

Pr.	Name	Initial value	Setting range	Description
823 G215*1	Speed detection filter 1	0.001 s	0	Without filter
			0.001 to 0.1 s	Set the time constant of primary delay filter for speed feedback signal.
827 G216	Torque detection filter 1	0 s	0	Without filter
			0.001 to 0.1 s	Set the time constant of primary delay filter torque feedback signal.
833 G315*1	Speed detection filter 2	9999	0 to 0.1 s	Second function of **Pr.823** (enabled when RT signal ON)
			9999	Same as **Pr.823** setting
837 G316	Torque detection filter 2	9999	0 to 0.1 s	Second function of **Pr.827** (enabled when RT signal ON)
			9999	Same as **Pr.827** setting

*1 These parameters are available when FR-A8AP (option) is installed.

上正科技有限公司
購買、維修 此手冊零組件
電話： 037-466399
Email: service@repairtw.com
Line id: @zzzz
www.repairtw.com

(1) Stabilizing speed detection (Pr.823, Pr.833)

- Speed loop response is reduced. Under ordinary circumstances, therefore, use the initial value as it is.
  If there is speed ripple due to high frequency disturbance, adjust until speed stabilizes by gradually raising the setting. Speed is oppositely destabilized if the setting value is too large.
- This setting is valid under vector control only.

(2) Stabilizing torque detection (Pr.827, Pr.837)

- Current loop response is reduced. Under ordinary circumstances, therefore, use the initial value as it is.
  If there is torque ripple due to high frequency disturbance, adjust until speed stabilizes by gradually raising the setting. Speed is oppositely destabilized if the setting value is too large.

(3) Employing multiple primary delay filters

- Use **Pr.833, Pr.837** if changing filter according to application. **Pr.833, Pr.837**: Second function selection (RT) signal

REMARKS

- The RT signal is a second function selection signal. The RT signal also enables other second functions. (Refer to page 420.)
- The RT signal is assigned to the terminal RT in the initial setting. Set "3" in any of **Pr.178 to Pr.189 (input terminal function selection)** to assign the RT signal to another terminal.

5.6.2 Excitation ratio Sensorless Vector

The excitation ratio can be lowered to enhance efficiency for light loads. (Motor magnetic noise can be reduced.)

Pr.	Name	Initial value	Setting range	Description
854 G217	**Excitation ratio**	100%	0 to 100%	Set an excitation ratio when there is no load.

- When excitation ratio is reduced, output torque startup is less responsive.
  This function is suitable for applications such as machine tools that suddenly accelerate/decelerate repeatedly up to high speed.

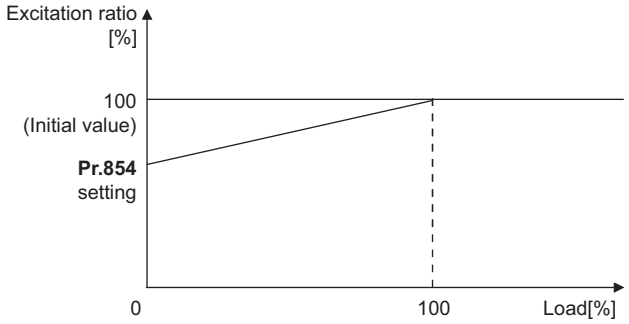

REMARKS

- The setting of **Pr.854** is invalid if **Pr.858 Terminal 4 function assignment** or **Pr.868 Terminal 1 function assignment** is set to "1" (flux command according to terminal).

上正科技有限公司
購買、維修 此手冊零組件
電話： 037-466333
Email: service@repairtw.com
Line id: @zzzz
www.repairtw.com

5.7 (E) Environment setting parameters

Purpose	Parameter to set			Refer to page
To set the time	Simple clock function	P.E030 to P.E032	Pr.1006 to Pr.1008	251
To set a limit for the reset function. To shut off output if the operation panel disconnects. To force deceleration to a stop on the operation panel.	Reset selection/ disconnected PU detection/PU stop selection/Reset limit	P.E100 to P.E102, P.E107	Pr.75	252
To select the display language of the parameter unit	PU display language selection	P.E103	Pr.145	254
To control the buzzer of the parameter unit and operation panel	PU buzzer control	P.E104	Pr.990	254
To adjust the LCD contrast of the parameter unit	PU contrast adjustment	P.E105	Pr.991	254
To turn OFF the operation panel when not using it for a certain period of time	Display-off mode	P.E106	Pr.1048	255
To use the USB memory	USB host reset	P.E110	Pr.1049	255
To use the setting dial of the operation panel like a potentiometer to set the frequency. To disable the operation panel.	Operation panel operation selection	P.E200	Pr.161	256
To change the frequency change increments which changes when using the setting dial of the operation panel	Frequency change increment amount setting	P.E201	Pr.295	257
To use the regeneration unit to increase the motor braking torque	Regenerative brake selection	P.E300, P.G107	Pr.30, Pr.70	593
To change the overload current rating specification	Multiple rating setting	P.E301	Pr.570	258
To input a voltage between 480 V and 500 V	Input voltage mode selection	P.E302	Pr.977	259
To prevent parameter rewriting	Parameter write disable selection	P.E400	Pr.77	260
To restrict parameters with a password	Password function	P.E410, P.E411	Pr.296, Pr.297	262
To use parameters freely	Free parameter	P.E420, P.E421	Pr.888, Pr.889	264
To change parameter settings for an IPM motor as a batch	IPM parameter initialization	P.E430	Pr.998	170
To set multiple parameters as a batch	Automatic parameter setting	P.E431	Pr.999	264
To display the required parameters	Applicable parameter display and user group function	P.E440 to P.E443	Pr.160, Pr.172 to Pr.174	268
To release the parameter copy warning (CP)	Parameter copy alarm release	P.E490	Pr.989	609
To reduce the motor noise and EMI	PWM carrier frequency changing	P.E600 to P.E602	Pr.72, Pr.240, Pr.260	270
To understand the maintenance time of inverter parts and peripheral device	Inverter parts life display	P.E700 to P.E704	Pr.255 to Pr.259	271
	Maintenance output function	P.E710 to P.E715	Pr.503, Pr.504, Pr.686 to Pr.689	274
	Current average value monitor signal	P.E720 to P.E722	Pr.555 to Pr.557	275

上正科技有限公司
購買 維修 此手冊零組件
電話： 037-466333
Email: service@repairtw.com
Line Id: @zzzz
www.repairtw.com

5.7.1 Simple clock function

The time can be set. The time can only be updated while the inverter power is ON.

Pr.	Name	Initial value	Setting range	Description
1006 E030	**Clock (year)**	2000	2000 to 2099	Set the year.
1007 E031	**Clock (month, day)**	101 (January 1)	101 to 131, 201 to 228, (229), 301 to 331, 401 to 430, 501 to 531, 601 to 630, 701 to 731, 801 to 831, 901 to 930, 1001 to 1031, 1101 to 1130, 1201 to 1231	Set the month and day. 1000 and 100 digits: January to December 10 and 1 digits: 1 to end of month (28, 29, 30 or 31) For December 31, set "1231".
1008 E032	**Clock (hour, minute)**	0 (00:00)	0 to 59, 100 to 159, 200 to 259, 300 to 359, 400 to 459, 500 to 559, 600 to 659, 700 to 759, 800 to 859, 900 to 959, 1000 to 1059, 1100 to 1159, 1200 to 1259,1300 to 1359, 1400 to 1459, 1500 to 1559, 1600 to 1659, 1700 to 1759, 1800 to 1859,1900 to 1959, 2000 to 2059, 2100 to 2159, 2200 to 2259, 2300 to 2359	Set the hour and minute using the 24-hour clock. 1000 and 100 digits: 0 to 23 hours 10 and 1 digits: 0 to 59 minutes For 23:59, set "2359".

上正科技有限公司
購買、維修 此手冊零組件
電話: 037-468333
Email: service@repairtw.com
Line Id: @2222

- When the year, month, day, time and minute are set in the parameters, the inverter counts the date and time. The date and time can be checked by reading the parameters.

REMARKS

- The clock's count-up data is saved in the inverter's EEPROM every 10 minutes.
- Because the date and time are cleared after turning OFF the control circuit power supply, the clock function must be reset after turning ON the power supply. Use a separate power supply, such as an external 24 V power supply, for the control circuit of the simple clock function, and supply power continuously to this control circuit.
- With the initial setting, inverter reset is performed if supplying power to the main circuit power supply is started with power supplied only to the control circuit power supply. Thus, the clock information stored in EEPROM is restored. Reset at the start of supplying power to the main circuit power supply can be disabled by setting **Pr.30 Regenerative function selection**. (Refer to page 593)
- The set clock is also used for functions such as faults history.

5.7.2 Reset selection/disconnected PU detection/PU stop selection

The reset input acceptance, disconnected PU (FR-DU08/FR-PU07) connector detection function and PU stop function can be selected.

Pr.	Name	Initial value	Setting range	Description
75	**Reset selection/ disconnected PU detection/ PU stop selection**	14	0 to 3, 14 to 17*1	For the initial setting, reset is always enabled, without disconnected PU detection, and with the PU stop function.
			0 to 3, 14 to 17, 100 to 103, 114 to 117*2	
E100	**Reset selection**	0	0	Reset input is always enabled.
			1	Reset input is enabled only when the protective function is activated.
E101	**Disconnected PU detection**	0	0	Operation continues even when the PU is disconnected.
			1	The inverter output is shut off when the PU is disconnected.
E102	**PU stop selection**	1	0	Decelerates to a stop when the STOP key is pressed in PU operation mode only.
			1	Decelerates to a stop when the STOP key for PU is pressed in any of the PU, external and communication operation modes.
E107	**Reset limit**	0	0	Reset limit disabled
			1 *2	Reset limit enabled

The parameters above will not return to their initial values even if parameter (all) clear is executed.

*1 The setting range for the FR-A820-03160(55K) or lower and FR-A840-01800(55K) or lower.

*2 The setting range for the FR-A820-03800(75K) or higher and FR-A840-02160(75K) or higher.

上正科技有限公司
購買、維修 此手冊零組件
電話： 037-466333
Email: service@repairtw.com
Line id: @zzzz
www.repairtw.com

Pr.75 Setting*3	Reset selection	Disconnected PU detection	PU stop selection
0, 100	Reset input always enabled	Operation continues even when PU is disconnected.	Decelerates to a stop when STOP RESET is input in PU operation mode only.
1, 101	Reset input enabled only when protective function activated		
2, 102	Reset input always enabled	Inverter output shut off when PU disconnected.	
3, 103	Reset input enabled only when protective function activated		
14 (Initial value), 114	Reset input always enabled	Operation continues even when PU is disconnected.	Decelerates to a stop when STOP RESET is input in any of the PU, external and communication operation modes.
15, 115	Reset input enabled only when protective function activated		
16, 116	Reset input always enabled	Inverter output shut off when PU disconnected.	
17, 117	Reset input enabled only when protective function activated		

*3 Setting **Pr.75** = any of "100 to 103 and 114 to 117" will enable the reset limit function. The setting is available for the FR-A820-03800(75K) or higher and FR-A840-02160(75K) or higher.

(1) Reset selection (P.E100)

- When **P.E100**="1" or **Pr.75**="1, 3, 15, 17, 100, 103, 115, or 117" is set, reset (reset command via RES signal or communication) input is enabled only when the protective function is activated.

REMARKS

- When the reset signal (RES) is input during operation, the motor coasts since the inverter being reset shuts off the output. Also, the cumulative values of electronic thermal O/L relay and regenerative brake duty are cleared.
- The input of the PU reset key is only enabled when the protective function is activated, regardless of the **P.E100** and **Pr.75** settings.

(2) Disconnected PU detection (P.E101)

- If the PU (FR-DU08/FR-PU07) is detected to be disconnected from the inverter for 1 s or longer while **P.E101** ="1" or **Pr.75** = "2, 3, 16, 17, 102, 103, 116, or 117", PU disconnection (E.PUE) is displayed and the inverter output is shut off.

REMARKS

- When the PU has been disconnected since before power-ON, the output is not shut off.
- To restart, confirm that the PU is connected and then reset.
- When **P.E101**="0" or **Pr.75** ="0, 1, 14, 15, 100, 101, 114, or 115" (operation continues even when PU disconnected), decelerates to a stop when PU is disconnected during PU JOG operation.
- When RS-485 communication operation is performed through the PU connector, the reset selection/PU stop selection function is valid but the disconnected PU detection function is invalid. (The communication is checked according to **Pr.122 PU communication check time interval**.)

(3) PU stop selection (P.E102)

- Stop can be performed by inputting STOP RESET from the PU in any of the operation modes of PU operation, External operation and network operation.
- When stop is performed by the PU stop function, "PS" is displayed on the PU. A fault output is not provided.
- When **P.E102**="0" or **Pr.75**="0 to 3, 100 to 103" is set, deceleration stop using STOP RESET is valid only in the PU operation mode.

REMARKS

- When **Pr.551 PU mode operation command source selection**="1" (PU mode RS-485 terminal), deceleration stop is performed even when STOP RESET is input during operation in PU mode via RS-485 communication.

上正科技有限公司
購買、維修 此手冊零組件
電話： 037-466333
Email: service@repairtw.com
Line Id: @zzzz
www.repairtw.com

(4) How to restart after stopping with STOP RESET input from the PU during External operation (PU stop (PS) release method)

- PU stop release method for operation panel (FR-DU08)
  1)After completion of deceleration to a stop, switch OFF the STF and STR signal.
  2)Press PU EXT three times. (PS release)
  (When **Pr.79 Operation mode selection** = "0 (initial value) or 6")
  When **Pr.79** = "2, 3, or 7", PU stop can be released by pressing one time.
- PU stop release method for parameter unit (FR-PU07)
  1)After completion of deceleration to a stop, switch OFF the STF or STR signal.
  2)Press EXT. (PS release)

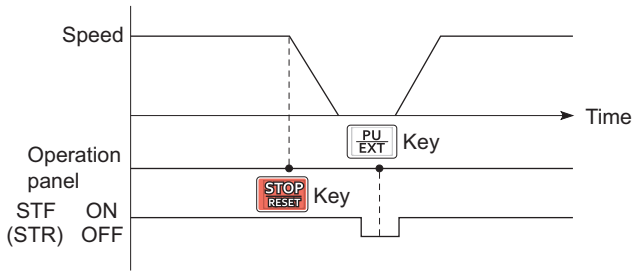

Stop/restart example for External operation

- The motor can be restarted by resetting the power supply or resetting with a RES signal.

REMARKS

- Even when **Pr.250 Stop selection** ≠ "9999" is set and coasting stop is selected, deceleration stop and not coasting stop is performed in the PU stop function during External operation.

(E) Environment setting parameters

(5) Reset limit function (P.E107)

- When **P.E107** = "1" or **Pr.75** = any of "100 to 103 and 114 to 117", if an electronic thermal O/L relay or an overcurrent protective function (E.THM, E.THT, E.OC[]) is activated while one of them has been already activated within 3 minutes, the inverter will not accept any reset command (RES signal, etc.) for about 3 minutes from the second activation.
- The reset limit function is available with the FR-A820-03800(75K) or higher and FR-A840-02160(75K) or higher.

REMARKS

- Resetting the inverter power (turning OFF the control power) will clear the accumulated thermal value.
- When the retry function is set enabled (**Pr.67 Number of retries at fault occurrence** ≠ "0"), the reset limit function is disabled.

⚠ Caution

⚠ Do not perform a reset while a start signal is being input. Doing so will cause a sudden start of the motor, which is dangerous.

♦ Parameters referred to ♦

Pr.67 Number of retries at fault occurrence ☞ page 332
Pr.79 Operation mode selection ☞ page 299
Pr.250 Stop selection ☞ page 592
Pr.551 PU mode operation command source selection ☞ page 308

5.7.3 PU display language selection

The display language of the parameter unit (FR-PU07) can be selected.

Pr.	Name	Initial value	Setting range	Description
145 E103	PU display language selection	1	0	Japanese
			1	English
			2	German
			3	French
			4	Spanish
			5	Italian
			6	Swedish
			7	Finnish

上軍科技有限公司
購買、維修此手冊零組件
電話： 037-466333
Email: service@repairtw.com
Line id: @zzzz
www.repairtw.com

5.7.4 Buzzer control

The buzzer can be set to "beep" when the keys of the operation panel (FR-DU08) and parameter unit (FR-PU07) are operated.

Pr.	Name	Initial value	Setting range	Description
990 E104	PU buzzer control	1	0	Without buzzer
			1	With buzzer

REMARKS

- When with buzzer is set, the buzzer sounds if an inverter fault occurs.

5.7.5 PU contrast adjustment

Contrast adjustment of the LCD of the parameter unit (FR-PU07) can be performed.
Decreasing the setting value makes the contrast lighter.

Pr.	Name	Initial value	Setting range	Description
991 E105	PU contrast adjustment	58	0 to 63	0: Light → 63: Dark

The above parameter is displayed as a simple mode parameter only when the parameter unit (FR-PU07) is connected.

5.7.6 Display-off mode

The LED of the operation panel can be turned OFF when it has not been used for a certain period of time.

Pr.	Name	Initial value	Setting range	Description
1048 E106	Display-off waiting time	0	0	Display-off mode disabled
			1 to 60 min	Set time until the LED of the operation panel is turned OFF.

- If the operation panel has not been operated for the time set in **Pr.1048**, the display-off mode is enabled and its LED is turned OFF.
- In the display-off mode, the "MON" LED flickers slowly.
- The count to display off is reset at installation/removal of the operation panel, power-ON/OFF of the inverter, or inverter reset.
- Display-off mode end condition
  -Operation of the operation panel
  -Occurrence of a warning, alarm, or fault
  -Installation/removal of the operation panel, power-ON/OFF of the inverter, or inverter reset
  -Connection/disconnection of the USB A connector

REMARKS

- The "P.RUN" LED is on in the display-off mode (when the PLC function is operating).

5.7.7 Resetting USB host errors

When a USB device is connected to the USB connector (connector A), the USB host error can be canceled without performing an inverter reset.

上正科技有限公司
購買 維修 此手冊零組件
電話： 037-466333
Email: service@repair.tw.com
Line id: @zzzz
www.repair.tw.com

Pr.	Name	Initial value	Setting range	Description
1049 E110	USB host reset	0	0	Read only
			1	Resets the USB host.

- Parameter copy (refer to page 609) and the trace function (refer to page 529) can be used when a USB device (such as a USB memory) is connected to the USB connector (connector A).
- When a device such as a USB charger is connected to the USB connector and an excessive current (500 mA or higher) flows, USB host error UF (UF warning) is displayed on the operation panel.
- If a UF warning occurs, disconnect the USB device and set **Pr.1049**="1" to cancel the USB error. (The UF warning can also be canceled by resetting the inverter power or resetting with the RES signal.)

5.7.8 Setting dial potentiometer mode/key lock operation selection

The setting dial of the operation panel (FR-DU08) can be used for setting like a potentiometer.
The key operation of the operation panel can be disabled.

Pr.	Name	Initial value	Setting range	Description	
161 E200	Frequency setting/key lock operation selection	0	0	Setting dial frequency setting mode	Key lock mode disabled
			1	Setting dial potentiometer mode	
			10	Setting dial frequency setting mode	Key lock mode enabled
			11	Setting dial potentiometer mode	

(1) Using the setting dial like a potentiometer to set the frequency

- The frequency can be set by simply turning the setting dial of the operation panel (FR-DU08) during operation.

  SET needs not to be pressed. (For the details of the operation method, refer to page 107.)

REMARKS

- If the display changes from flickering "60.00" to "0.00", the setting value of **Pr.161** may not be "1".
- The newly-set frequency will be saved as the set frequency in EEPROM after 10 s.
- When setting the frequency by turning the setting dial, the frequency goes up to the set value of **Pr.1 Maximum frequency** (initial value: 200 Hz). Be aware of what frequency **Pr.1** is set to, and adjust the setting of **Pr.1** according to the application.

上証科技有限公司
購買、維修 此手冊零組件
電話： 037-466333
Email: service@repairtw.com
Line id: @2222
www.repairtw.com

(2) Disabling the setting dial and key operation of the operation panel (Press and hold [MODE] (2 s))

- Operation using the setting dial and keys of the operation panel can be disabled to prevent parameter changes, unexpected starts or frequency changes.
- Set **Pr.161** to "10 or 11" and then press MODE for 2 s to disable setting dial or key operations.
- When setting dial and key operations are disabled, LOCd appears on the operation panel. If setting dial or key operation is attempted while dial and key operations are disabled, LOCd appears. (When a setting dial or key operation is not performed for 2 s, the monitor display appears.)
- To enable the setting dial and key operation again, press MODE for 2 s.

REMARKS

- Even if setting dial and key operations are disabled, the monitor indicator and STOP RESET are enabled.
- The PU stop cannot be released with key operations unless the operation lock is released first.

♦ Parameters referred to ♦

Pr.1 Maximum frequency page 334

5.7.9 Frequency change increment amount setting

When setting the set frequency with the setting dial of the operation panel, the frequency changes in 0.01 Hz increments in the initial status. Setting this parameter to increase the frequency increment amount that changes when the setting dial is rotated can improve usability.

Pr.	Name	Initial value	Setting range	Description
295 **E201**	**Frequency change increment amount setting**	0	0	Function invalid
			0.01	The minimum change width when the set frequency is changed with the setting dial can be set.
			0.10	
			1.00	
			10.00	

(1) Basic operation

- When **Pr.295**≠"0", the minimum increment when the set frequency is changed with the setting dial can be set.
  For example, when **Pr.295**="1.00 Hz", one click (one dial gauge) of the setting dial changes the frequency in increments of 1.00 Hz, such as 1.00 Hz → 2.00 Hz → 3.00 Hz.

When **Pr.295**="1"

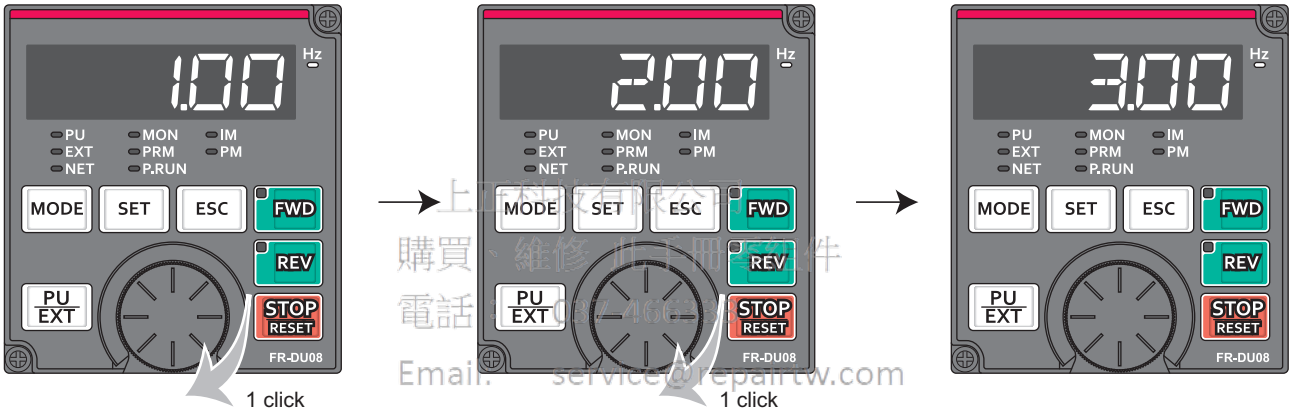

上正科技有限公司
購買、維修 此手冊零組件
電話：03/4663
Email: service@repairtw.com
Line id: @zzzz
www.repairtw.com

REMARKS

- When machine speed display is selected in **Pr.37 Speed display**, the minimum increments of change are determined by **Pr.295** as well. Note that the setting value may differ because the speed setting performs frequency conversion for the set machine speed, and then reverse-converts it to the speed display again.
- For **Pr.295**, the increments are not displayed.
- The **Pr.295** setting is enabled only for changes to the set frequency. It does not apply to the settings of other parameters related to frequency.
- When 10 is set, the frequency setting changes in 10 Hz increments. Be cautious of excessive speed (in potentiometer mode).

♦ Parameters referred to ♦

Pr.37 Speed display ☞ page 344

5.7.10 Multiple rating setting

Four rating types of different rated current and permissible load can be selected. The optimal inverter rating can be chosen in accordance with the application, enabling equipment size to be reduced.

Pr.	Name	Initial value	Setting range	Description (overload current rating, surrounding air temperature)
570 E301	Multiple rating setting	2	0*1	SLD rating 110% 60 s, 120% 3 s (inverse-time characteristics) Surrounding air temperature 40°C
			1	LD rating 120% 60 s, 150% 3 s (inverse-time characteristics) Surrounding air temperature 50°C
			2	ND rating 150% 60 s, 200% 3 s (inverse-time characteristics) Surrounding air temperature 50°C
			3*1	HD rating 200% 60 s, 250% 3 s (inverse-time characteristics) Surrounding air temperature 50°C

*1 Not compatible with the IP55 compatible model.

(1) Changing the parameter initial values and setting ranges

- When inverter reset and all parameter clear are performed after setting **Pr.570**, the parameter initial values are changed according to each rating, as shown below.

上正科技有限公司
購買、維修 此手冊零組件
電話： 037-466333
Email: service@repairtw.com
Line id: *1 @zzzz
www.repairtw.com

Pr.	Name	Pr.570 setting				Refer to
		0	1	2 (Initial value)	3	
0	Torque boost	*1	*1	*1	*1	577
7	Acceleration time	*1	*1	*1	*1	278
8	Deceleration time	*1	*1	*1	*1	278
9	Electronic thermal O/L relay	SLD rated current*2	LD rated current*2	ND rated current*2*3	HD rated current*2*3	322
12	DC injection brake operation voltage	*1	*1	*1	*1	584
22	Stall prevention operation level	110%	120%	150%	200%	181, 336
48	Second stall prevention operation level	110%	120%	150%	200%	336
56	Current monitoring reference	SLD rated current*2	LD rated current*2	ND rated current*2	HD rated current*2	356
114	Third stall prevention operation level	110%	120%	150%	200%	336
148	Stall prevention level at 0 V input	110%	120%	150%	200%	336
149	Stall prevention level at 10 V input	120%	150%	200%	250%	336
150	Output current detection level	110%	120%	150%	200%	381
165	Stall prevention operation level for restart	110%	120%	150%	200%	511
557	Current average value monitor signal output reference current	SLD rated current*2	LD rated current*2	ND rated current*2	HD rated current*2	275
893	Energy saving monitor reference (motor capacity)	SLD rated motor capacity*2	LD rated motor capacity*2	ND rated motor capacity*2	HD rated motor capacity*2	365

*1 Initial values differ depending on the rating as follows.

Pr.	Pr.570 setting	200V class FR-A820-[]																
		00046 (0.4K)	00077 (0.75K)	00105 (1.5K)	00167 (2.2K)	00250 (3.7K)	00340 (5.5K)	00490 (7.5K)	00630 (11K)	00770 (15K)	00930 (18.5K)	01250 (22K)	01540 (30K)	01870 (37K)	02330 (45K)	03160 (55K)	03800 (75K)	04750 (90K)
		400V class FR-A840-[]																
		00023 (0.4K)	00038 (0.75K)	00052 (1.5K)	00083 (2.2K)	00126 (3.7K)	00170 (5.5K)	00250 (7.5K)	00310 (11K)	00380 (15K)	00470 (18.5K)	00620 (22K)	00770 (30K)	00930 (37K)	01160 (45K)	01800 (55K)	02160 (75K)	02600 (90K) or higher
0 (%)	0, 1	6	6	4	4	4	3	3	2	2	2	2	2	2	1.5	1.5	1	1
	2, 3	6	6	4	4	4	3	3	2	2	2	2	2	2	2	2	1	1
7 (s)	0, 1	5	5	5	5	5	5	15	15	15	15	15	15	15	15	15	15	15
	2	5	5	5	5	5	5	5	15	15	15	15	15	15	15	15	15	15
	3	5	5	5	5	5	5	5	5	15	15	15	15	15	15	15	15	15
8 (s)	0, 1	10	10	10	10	10	10	30	30	30	30	30	30	30	30	30	30	30
	2	5	5	5	5	5	5	5	15	15	15	15	15	15	15	15	15	15
	3	5	5	5	5	5	5	5	5	15	15	15	15	15	15	15	15	15
12 (%)	0, 1	4	4	4	4	4	4	2	2	2	2	2	2	2	2	1	1	1
	2	4	4	4	4	4	4	4	2	2	2	2	2	2	2	2	1	1
	3	4	4	4	4	4	4	4	4	2	2	2	2	2	2	2	2	1

*2 The rated current and motor capacity differ depending on the inverter capacity. Refer to the inverter rated specifications (page 670).

*3 For FR-A820-00077(0.75K) or lower and FR-A840-00250(7.5K) or lower, the initial value is 85% of the rated current.

- Setting **Pr.292 Automatic acceleration/deceleration** = "5 or 6 (lift mode)" will change the stall prevention operation level as shown below.

Pr.	Setting	Pr.570 setting				Refer to
		0	1	2 (Initial value)	3	
292	5	110%	120%	150%	200%	296
	6	115%	140%	180%	230%	

上正科技有限公司 購買、維修 此手機零組件 電話： 037-466333 Email: service@repairtw.com Line id: @zzzz

REMARKS

- When **Pr.570**="0" (SLD rating), carrier frequency automatic reduction is enabled regardless of the setting in **Pr.260 PWM frequency automatic switchover**.
- To use the FR-A820-03160(55K) and FR-A840-01800(55K) in the LD and SLD ratings, an optional DC reactor corresponding to the applied motor is required.
- Setting the LD or SLD rating to the FR-A820-03160(55K) and FR-A840-01800(55K) changes their parameter setting increments and setting ranges in the same way as for the FR-A820-03800(75K) and FR-A840-02160(75K) or higher. For example, the setting increment and the setting range of **Pr.9** will change from "0.01 A" to "0.1 A" and from "0 to 500 A" to "0 to 3600 A". For the setting of each parameter, refer to the parameter list (on page 122).

♦ **Parameters referred to** ♦

Pr.260 PWM frequency automatic switchover ☞ page 270

5.7.11 Using the power supply exceeding 480V

To input a voltage between 480 V and 500 V to the 400 V class inverter, change the voltage protection level.

Pr.	Name	Initial value	Setting range	Description
977 E302	Input voltage mode selection	0	0	400 V class voltage protection level
			1	500 V class voltage protection level

- To use a voltage between 480 V and 500 V, set **Pr.977 Input voltage mode selection** = "1". The setting is applied after a reset.
- Setting **Pr.977** = "1" will change the voltage protection level to the one for the 500 V class.
- The increased magnetic excitation deceleration level is changed to 740 V. (Use **Pr.660 Increased magnetic excitation deceleration operation selection** to select the increased magnetic excitation deceleration.)

REMARKS

- Stand-alone options (except line noise filter) cannot be used when inputting a voltage between 480 and 500 V.
- The voltage protection level of the 200 V class inverters is not affected by the **Pr.977** setting.

♦ **Parameters referred to** ♦

Pr.660 Increased magnetic excitation deceleration operation selection ☞ page 601

5.7.12 Parameter write selection

Whether to enable the writing to various parameters or not can be selected. Use this function to prevent parameter values from being rewritten by misoperation.

Pr.	Name	Initial value	Setting range	Description
77 E400	Parameter write selection	0	0	Writing is enabled only during stop.
			1	Parameter writing is disabled.
			2	Parameter writing is enabled in any operation mode regardless of the operation status.

Pr.77 can be set at any time regardless of the operation mode or operation status. (Setting through communication is unavailable.)

(1) Writing parameters only during stop (Pr.77="0" initial value)

- Parameters can be written only during a stop in the PU operation mode.
- The following parameters can always be written regardless of the operation mode or operation status.

Pr.	Name
4 to 6	(Multi-speed setting high-speed, middle-speed, low-speed)
22	Stall prevention operation level
24 to 27	(Multi-speed setting speed 4 to speed 7)
52	Operation panel main monitor selection
54	FM/CA terminal function selection
55	Frequency monitoring reference
56	Current monitoring reference
72*1	PWM frequency selection
75	Reset selection/disconnected PU detection/ PU stop selection
77	Parameter write selection
79*2	Operation mode selection
129	PID proportional band
130	PID integral time
133	PID action set point
134	PID differential time
158	AM terminal function selection
160	User group read selection
232 to 239	(Multi-speed setting speed 8 to speed 15)
240*1	Soft-PWM operation selection
241	Analog input display unit switchover
268	Monitor decimal digits selection
271	High-speed setting maximum current
272	Middle-speed setting minimum current
273	Current averaging range
274	Current averaging filter time constant
275*1	Stop-on contact excitation current low-speed multiplying factor
290	Monitor negative output selection
295	Frequency change increment amount setting
296, 297	(Password setting)
306	Analog output signal selection
310	Analog meter voltage output selection
340*2	Communication startup mode selection
345, 346	(DeviceNet communication)
414*2	PLC function operation selection
415*2	Inverter operation lock mode setting
416, 417	(PLC function)

Pr.	Name
434, 435	(CC-Link communication)
496, 497	(Remote output)
498	PLC function flash memory clear
506 to 515	(User parameter)
550*2	NET mode operation command source selection
551*2	PU mode operation command source selection
555 to 557	(Current average value monitor)
656 to 659	(Analog remote output)
755 to 758	(Second PID control)
759	PID unit selection
774 to 776	(PU/DU monitor selection)
805	Torque command value (RAM)
806	Torque command value (RAM,EEPROM)
866	Torque monitoring reference
888, 889	(Free parameter)
891 to 899	(Energy saving monitor)
C0 (900)	FM/CA terminal calibration
C1 (901)	AM terminal calibration
C8 (930)	Current output bias signal
C9 (930)	Current output bias current
C10 (931)	Current output gain signal
C11 (931)	Current output gain current
990	PU buzzer control
991	PU contrast adjustment
992	Operation panel setting dial push monitor selection
997	Fault initiation
998*2	PM parameter initialization
999*2	Automatic parameter setting
1006	Clock (year)
1007	Clock (month, day)
1008	Clock (hour, minute)
1019	Analog meter voltage minus output selection
1142	Second PID unit selection
1150 to 1199	(PLC function user parameters)
1283	Home position return speed
1284	Home position return creep speed

上正科技有限公司
購買、維修 此手冊零組件
電話： 037-466333
Email: service@repairtw.com
Line id: @zzzz
www.repairtw.com

*1 Writing during operation is enabled in PU operation mode, but disabled in External operation mode.
*2 Writing during operation is disabled. To change the parameter setting value, stop the operation.

(2) Disabling parameter write (Pr.77="1")

- Parameter write, parameter clear and all parameter clear are disabled. (Parameter read is enabled.)
- The following parameters can be written even if **Pr.77**="1".

Pr.	Name
22	Stall prevention operation level
75	Reset selection/disconnected PU detection/ PU stop selection
77	Parameter write selection
79	Operation mode selection
160	User group read selection
296	Password lock level
297	Password lock/unlock

Pr.	Name
345, 346	(DeviceNet communication)
496, 497	(Remote output)
498	PLC function flash memory clear
656 to 659	(Analog remote output)
805	Torque command value (RAM)
806	Torque command value (RAM,EEPROM)
997	Fault initiation

(3) Writing parameters during operation (Pr.77="2")

- These parameters can always be written.
- The following parameters cannot be written during operation if **Pr.77**="2". To change the parameter setting value, stop the operation.

Pr.	Name
23	Stall prevention operation level compensation factor at double speed
48	Second stall prevention operation level
49	Second stall prevention operation frequency
60	Energy saving control selection
61	Reference current
66	Stall prevention operation reduction starting frequency
71	Applied motor
79	Operation mode selection
80	Motor capacity
81	Number of motor poles
82	Motor excitation current
83	Rated motor voltage
84	Rated motor frequency
90 to 94	(Motor constant)
95	Online auto tuning selection
96	Auto tuning setting/status
135 to 139	(Electronic bypass sequence parameter)
178 to 196	(Input and output terminal function selection)
261	Power failure stop selection
289	Inverter output terminal filter
291	Pulse train I/O selection
292	Automatic acceleration/deceleration
293	Acceleration/deceleration separate selection
298	Frequency search gain
313 to 322	(Extended output terminal function selection)
329	Digital input unit selection
414	PLC function operation selection
415	Inverter operation lock mode setting
418	Extension output terminal filter
419	Position command source selection
420, 421	(Electronic gear)
450	Second applied motor
451	Second motor control method selection
453	Second motor capacity
454	Number of second motor poles
455	Second motor excitation current

Pr.	Name
456	Rated second motor voltage
457	Rated second motor frequency
458 to 462	(Second motor constant)
463	Second motor auto tuning setting/status
541	Frequency command sign selection
560	Second frequency search gain
561	PTC thermistor protection level
570	Multiple rating setting
574	Second motor online auto tuning
598	Undervoltage level
639, 640	(Brake sequence)
641, 650, 651	(Second brake sequence)
660 to 662	(Increased magnetic excitation deceleration)
699	Input terminal filter
702	Maximum motor frequency
706, 707, 711, 712, 717, 721, 724, 725	(PM motor tuning)
738 to 746	(Second PM motor tuning)
747	Second motor low-speed range torque characteristics
788	Low speed range torque characteristic selection
800	Control method selection
819	Easy gain tuning selection
858	Terminal 4 function assignment
859	Torque current/Rated PM motor current
860	Second motor torque current/Rated PM motor current
868	Terminal 1 function assignment
977	Input voltage mode selection
998	PM parameter initialization
999	Automatic parameter setting
1002	Lq tuning target current adjustment coefficient
1103	Deceleration time at emergency stop
1292	Position control terminal input selection
1293	Roll feeding mode selection

正正科技有限公司
購買、維修此手冊零組件
電話： 037-466333
Email: service@repairtw.com
line id: @zzzz
www.repairtw.com

5.7.13 Password function

Registering a 4-digit password can restrict parameter reading/writing.

Pr.	Name	Initial value	Setting range	Description
296 E410	Password lock level	9999	0 to 6, 99, 100 to 106, 199	Select restriction level of parameter reading/ writing when a password is registered.
			9999	No password lock
297 E411	Password lock/unlock	9999	1000 to 9998	Register a 4-digit password
			(0 to 5) *1	Displays password unlock error count. (Reading only) (Valid when **Pr.296** = "100 to 106, or 199")
			9999 *1	No password lock

The above parameters can be set when **Pr.160 User group read selection** = "0". However, when **Pr.296** ≠ 9999 (password lock is set), **Pr.297** can always be set, regardless of the setting in **Pr.160**.

*1 When **Pr.297** = "0, 9999", writing is always enabled, but setting is disabled. (The display cannot be changed.)

(1) Parameter reading/writing restriction level (Pr.296)

- The level of the reading/writing restriction using the PU/Network (NET) operation mode operation command can be selected with **Pr.296**.

Pr.296 setting	PU operation mode operation command*3		NET operation mode operation command*4			
			RS-485 terminals / PLC function*7		Communication option	
	Read*1	Write*2	Read	Write*2	Read	Write*2
9999	○	○	○	○	○	○
0, 100*6	×	×	×	×	×	×
1, 101	○	×	○	×	○	×
2, 102	○	×	○	○	○	○
3, 103	○	○	○	×	○	×
4, 104	×	×	×	×	○	×
5, 105	×	×	○	○	○	○
6, 106	○	○	×	×	○	×
99 to 199	Only the parameters registered in the user group can be read/written.*5 (For the parameters not registered in the user group, same restriction level as "4, 104" applies.)					

○: Enabled, ×: Disabled

*1 If the parameter reading is restricted by the **Pr.160 User group read selection** setting, those parameters are unavailable for reading even when "○" is indicated.

*2 If the parameter writing is restricted by the **Pr.77 Parameter write selection** setting, those parameters are unavailable for writing even when "○" is indicated.

*3 This restricts parameter access from the command source that can write a parameter under the PU operation mode (initially the operation panel (FR-DU08) or the parameter unit). (For the PU operation mode command source selection, refer to page 308.)

*4 This restricts parameter access from the command source that can write a parameter under the Network operation mode (initially the RS-485 terminals or a communication option). (For the NET operation mode command source selection, refer to page 308.)

*5 Read/write is enabled only for the simple mode parameters registered in the user group when **Pr.160**="9999". **Pr.296** and **Pr.297** are always read/write enabled whether registered to a user group or not.

*6 If a communication option is installed, an option fault Option fault (E.OPT) occurs, and the inverter output shuts off. (Refer to page 636.)

*7 The PLC function user parameters (**Pr.1150 to Pr.1199**) can be written and read by the PLC function regardless of the **Pr.296** setting.

(2) Registering a password (Pr.296, Pr.297)

- The following section describes how to register a password.

1)Set the parameter reading/writing restriction level. (**Pr.296** ≠ "9999")

Pr.296 setting	Password unlock error restriction	Pr.297 display
0 to 6, 99	No restriction	Always displays 0
100 to 106, 199*1	Restricted at fifth error	Displays the error count (0 to 5)

*1 During **Pr.296** = any of "100 to 106, 199", if password unlock error has occurred 5 times, correct password will not unlock the restriction. All parameter clear can unlock the restriction. (In this case, the parameters are returned to their initial values.)

2)Write a four-digit number (1000 to 9998) in **Pr.297** as a password. (Writing is disabled when **Pr.296**="9999".) When a password is registered, parameter reading/writing is restricted with the restriction level set in **Pr.296** until unlocking.

上正科技有限公司
購買、維修 此手冊零組件
電話： 037-466333
Email: service@repairtw.com
Line id: @2222
www.repairtw.com

REMARKS

- After registering a password, the read value of **Pr.297** is always one of "0 to 5".
- LOCd appears when a password restricted parameter is read/written.
- Even if a password is registered, the parameters, which the inverter itself writes, such as inverter parts life are overwritten as needed.
- Even if a password is registered, reading/writing is enabled for **Pr.991 PU contrast adjustment** when the parameter unit (FR-PU07) is connected.

(3) Unlocking a password (Pr.296, Pr.297)

- There are two ways of unlocking the password.
- Enter the password in **Pr.297**. If the password matches, it unlocks. If the password does not match, an error occurs and the password does not unlock. When any of "100 to 106, or 199" is set in **Pr.296** and a password unlock error occurs five times, the restriction will not be unlocked even if the correct password is subsequently input. (Password lock in operation.)
- Perform all parameter clear.

REMARKS

- If the password is forgotten, it can be unlocked with all parameter clear, but doing so will also clear the other parameters.
- All parameter clear cannot be performed during the operation.
- During the conditions where parameter reading is disabled (**Pr.296** = any of "0, 4, 5, 99, 100, 104, 105, or 199"), do not use FR Configurator2. It may not operate correctly.
- The password unlocking method differs between the operation panel (FR-DU08), parameter unit (FR-PU07), RS-485 communication and communication option.

	FR-DU08/FR-PU07	RS-485 communication	Communication option
All parameter clear	○	○	○
Parameter clear	×	×	○

○: Password can be unlocked, ×: Password cannot be unlocked

上正科技有限公司
購買、維修 此手冊零組件
電話： 097-466393
Email: service@repairtw.com
Line id: @zzzz
www.repairtw.com

- For the parameter clear and parameter all clear methods for the communication option and parameter unit (FR-PU07), refer to the Instruction Manual of each option. (For the operation panel (FR-DU08), refer to page 608, for the Mitsubishi inverter protocol of RS-485 communication, refer to page 546, and for the Modbus-RTU communication protocol, refer to page 560.)

(4) Parameter operations during password locking/unlocking

Operation		Password unlocked		Password locked	Password lock in operation
		Pr.296 = 9999 Pr.297 = 9999	Pr.296 ≠ 9999 Pr.297 = 9999	Pr.296 ≠ 9999 Pr.297 = 0 to 4 (read value)	Pr.296 = 100 to 106, 199 Pr.297 = 5 (read value)
Pr.296	Read	○*1	○	○	○
	Write	○*1	○*1	×	×
Pr.297	Read	○*1	○	○	○
	Write	×	○	○	○
Parameter clear execution		○	○	×*4	×*4
All parameter clear execution		○	○	○*2	○*2
Parameter copy execution		○	○	×	×

○: Enabled, ×: Disabled

*1 Reading/writing is disabled if reading is restricted by the **Pr.160** setting. (Reading is available in the Network operation mode regardless of the **Pr.160** setting.)
*2 All parameter clear cannot be performed during the operation.
*3 Correct password will not unlock the restriction.
*4 Parameter clear can only be performed from the communication option.

REMARKS

- When **Pr.296** = "4, 5, 104, or 105" (password lock), the setting screen for PU JOG frequency is not displayed in the parameter unit (FR-PU07).
- When the password is being locked, parameter copy using the operation panel (FR-DU08), parameter unit (FR-PU07) and USB memory is not enabled.

♦ Parameters referred to ♦

Pr.77 Parameter write selection ☞ page 260
Pr.160 User group read selection ☞ page 268
Pr.550 NET mode operation command source selection ☞ page 308
Pr.551 PU mode operation command source selection ☞ page 308

5.7.14 Free parameter

Any number within the setting range of 0 to 9999 can be input.
For example, these numbers can be used:

- As a unit number when multiple units are used.
- As a pattern number for each operation application when multiple units are used.
- As the year and month of introduction or inspection.

Pr.	Name	Initial value	Setting range	Description
888 E420	Free parameter 1	9999	0 to 9999	Any value can be input. The settings are retained even if the inverter power is turned OFF.
889 E421	Free parameter 2	9999	0 to 9999	

REMARKS

- **Pr.888** and **Pr.889** do not influence the operation of the inverter.

5.7.15 Setting multiple parameters as a batch

Parameter settings are changed as a batch. Those include communication parameter settings for the Mitsubishi's human machine interface (GOT) connection and the parameter setting for the rated frequency settings of 50 Hz/60 Hz and acceleration/deceleration time.
Multiple parameters are changed automatically. Users do not have to consider each parameter number. (Automatic parameter setting mode)

購買 維修 此手冊零組件
電話： 037-466333
Email: service@repairtw.com
Line id: @zzzz
www.repairtw.com

Pr.	Name	Initial value	Setting range	Description	
999 E431	Automatic parameter setting	9999*1	1	Standard PID display setting	
			2	Extended PID display setting	
			10	GOT initial setting (PU connector)	"Controller Type" in GOT: FREQROL 500/700/800, SENSORLESS SERVO
			11	GOT initial setting (RS485 terminals)	
			12	GOT initial setting (PU connector)	"Controller Type" in GOT: FREQROL 800(Automatic Negotiation)
			13	GOT initial setting (RS-485 terminal)	
			20	50 Hz rated frequency	
			21	60 Hz rated frequency	
			9999	No action	

*1 The read value is always "9999".

(1) Automatic parameter setting (Pr.999)

- Select which parameters to automatically set from the table below, and set them in **Pr.999**. Multiple parameter settings are changed automatically. Refer to page 266 for the list of parameters that are changed automatically.

Pr.999 Setting	Description		Operation in the automatic parameter setting mode
1	Sets the standard monitor indicator setting of PID control.		AUTO (AUTO) → PID (PID) → Write "1"
2	Automatically sets the monitor indicator for PID control.		AUTO (AUTO) → PID (PID) → Write "2"
10	Automatically sets the communication parameters for the GOT connection with a PU connector ("Controller Type" in GOT: FREQROL 500/700/800, SENSORLESS SERVO)		AUTO (AUTO) → GOT (GOT) → Write "1"
11	Automatically sets the communication parameters for the GOT connection with RS-485 terminals ("Controller Type" in GOT: FREQROL 500/700/800, SENSORLESS SERVO)		—
12	Automatically sets the communication parameters for the GOT connection with a PU connector ("Controller Type" in GOT: FREQROL 800(Automatic Negotiation))		AUTO (AUTO) → GOT (GOT) → Write "2"
13	Automatically sets the communication parameters for the GOT connection with RS-485 terminals ("Controller Type" in GOT: FREQROL 800(Automatic Negotiation))		—
20	50 Hz rated frequency	Sets the related parameters of the rated frequency according to the power supply frequency	AUTO (AUTO) → F50 (F50) → Write "1"
21	60 Hz rated frequency		—

REMARKS

- If the automatic setting is performed with **Pr.999** or the automatic parameter setting mode, the settings including the changed parameter settings (changed from the initial setting) will be automatically changed. Before performing the automatic setting, confirm that changing the parameters will not cause any problem.

上正科技有限公司
購買、維修 此手冊零組件
電話： 037-466333
Email: service@repairtw.com
Line id: @zz222
www.repairtw.com

(2) PID monitor indicator setting (Pr.999="1 or 2")

Pr.	Name	Initial value	Pr.999="1"	Pr.999="2"	Refer to page
759	**PID unit selection**	9999	9999	4	496
1142	**Second PID unit selection**	9999	9999	4	
774	**Operation panel monitor selection 1**	9999	9999	52	346
775	**Operation panel monitor selection 2**	9999	9999	53	
776	**Operation panel monitor selection 3**	9999	9999	54	
C42 (934)	**PID display bias coefficient**	9999	9999	0	496
C44 (935)	**PID display gain coefficient**	9999	9999	100	
1136	**Second PID display bias coefficient**	9999	9999	0	
1138	**Second PID display gain coefficient**	9999	9999	100	
—	**3-step monitor setting**	—	Disabled	Enabled*1	—
—	**Extended direct setting**	—	Disabled	Enabled*1	—
—	**Dedicated parameter list function**	—	Disabled	Enabled*1	—

*1 Enabled when the FR-PU07-01 is used.

- 3-line monitor setting
  The 3-line monitor is used as the first monitor.
- Extended direct setting
  Pressing the [FUNC] key of the FR-PU07-01 displays the extended direct setting screen. The PID action set point can be directly set regardless of the operation mode or **Pr.77 Parameter write selection** setting.
  Pressing the [FUNC] key on the extended direct setting screen displays the function menu.

(E) Environment setting parameters

Extended direct setting	Parameter to be set
Extended direct setting 1	**Pr.133 PID action set point**
Extended direct setting 2	**Pr.755 Second PID action set point**

- Dedicated parameter list function
  Pressing the [PrSET] key of the FR-PU07-01 displays the dedicated parameter list. Parameters that need to be set first for the PID extended display setting are listed.

Dedicated parameter list	Parameter to be set
No.1	**Pr.999 Automatic parameter setting**
No.2	**Pr.934 PID display bias coefficient**
No.3	**Pr.935 PID display gain coefficient**

REMARKS

- The display of parameters other than the above may be changed due to changes in **C42** or **C44**. Set the PID monitor indicator before changing the settings of other parameters.

(3) GOT initial setting (PU connector) (Pr.999 = "10, 12")

Pr.	Name	Initial value	Pr.999="10"	Pr.999="12"	Refer to page
79	**Operation mode selection**	0	1	1	299
118	**PU communication speed**	192	192	1152	544
119	**PU communication stop bit length**	1	10	0	
120	**PU communication parity check**	2	1	1	
121	**Number of PU communication retries**	1	9999	9999	
122	**PU communication check time interval**	9999	9999	9999	
123	**PU communication waiting time setting**	9999	0 ms	0 ms	
124	**PU communication CR/LF selection**	1	1	1	
340	**Communication startup mode selection**	0	0	0	307
414	**PLC function operation selection**	0	—	2*1	527

*1 When **Pr.414**="1", the setting value is not changed.

大正科技有限公司
購買、維修 此手冊零組件
電話： 037-466333
Email: service@repairtw.com
Line id: @zzzz
www.repairtw.com

- Initial setting with the GOT2000 series
  - When "FREQROL 500/700/800, SENSORLESS SERVO" is selected for "Controller Type" in the GOT setting, set **Pr.999**="10" to configure the GOT initial setting.
  - When "FREQROL 800(Automatic Negotiation)" is selected for "Controller Type" in the GOT setting, the GOT automatic connection can be used. When "FREQROL 800(Automatic Negotiation)" is selected for "Controller Type" in the GOT setting and the GOT automatic connection is not used, set **Pr.999**="12" to configure the GOT initial setting. (Refer to **page 575**)
- Initial setting with the GOT1000 series
  - Set **Pr.999**="10" to configure the GOT initial setting.

REMARKS

- Always perform an inverter reset after the initial setting.
- For the details of connection with GOT, refer to the Instruction Manual of GOT.

(4) GOT initial setting (RS-485 terminals) (Pr.999 = "11, 13")

Pr.	Name	Initial value	Pr.999="11"	Pr.999="13"	Refer to page
79	Operation mode selection	0	0	0	299
332	RS-485 communication speed	96	192	1152	544
333	RS-485 communication stop bit length	1	10	0	
334	RS-485 communication parity check selection	2	1	1	
335	RS-485 communication retry count	1	9999	9999	
336	RS-485 communication check time interval	0 s	9999	9999	
337	RS-485 communication waiting time setting	9999	0 ms	0 ms	
340	Communication startup mode selection	0	1	1	307
341	RS-485 communication CR/LF selection	1	1	1	544
414	PLC function operation selection	0	—	2*1	527
549	Protocol selection	0	0	0	560

*1 When **Pr.414**="1", the setting value is not changed.

- Initial setting with the GOT2000 series
  - When "FREQROL 500/700/800, SENSORLESS SERVO" is selected for "Controller Type" in the GOT setting, set **Pr.999**="11" to configure the GOT initial setting.
  - When "FREQROL 800(Automatic Negotiation)" is selected for "Controller Type" in the GOT setting, the GOT automatic connection can be used. When "FREQROL 800(Automatic Negotiation)" is selected for "Controller Type" in the GOT setting and the GOT automatic connection is not used, set **Pr.999**="13" to configure the GOT initial setting. (Refer to page 575)
- Initial setting with the GOT1000 series
  - Set **Pr.999**="11" to configure the GOT initial setting.

REMARKS

- Always perform an inverter reset after the initial setting.
- For the details of connection with GOT, refer to the Instruction Manual of GOT.

上正科技有限公司
購買、維修 此手冊零組件
電話： 037-466333
Email: service@repairtw.com
www.repairtw.com

(5) Rated frequency (Pr.999 = "20 (50 Hz), 21 (60 Hz)")

Pr.	Name	Initial value		Pr.999 = "21"	Pr.999 = "20"	Refer to page
		FM type	CA type			
3	Base frequency	60 Hz	50 Hz	60 Hz	50 Hz	578
4	Multi-speed setting (high speed)	60 Hz	50 Hz	60 Hz	50 Hz	319
20	Acceleration/deceleration reference frequency	60 Hz	50 Hz	60 Hz	50 Hz	278
37	Speed display	0		0		344
55	Frequency monitoring reference	60 Hz	50 Hz	60 Hz	50 Hz	356
66	Stall prevention operation reduction starting frequency	60 Hz	50 Hz	60 Hz	50 Hz	336
116	Third output frequency detection	60 Hz	50 Hz	60 Hz	50 Hz	336
125 (903)	Terminal 2 frequency setting gain frequency	60 Hz	50 Hz	60 Hz	50 Hz	400
126 (905)	Terminal 4 frequency setting gain frequency	60 Hz	50 Hz	60 Hz	50 Hz	
263	Subtraction starting frequency	60 Hz	50 Hz	60 Hz	50 Hz	523
266	Power failure deceleration time switchover frequency	60 Hz	50 Hz	60 Hz	50 Hz	
386	Frequency for maximum input pulse	60 Hz	50 Hz	60 Hz	50 Hz	315
505	Speed setting reference	60 Hz	50 Hz	60 Hz	50 Hz	344
808	Forward rotation speed limit/speed limit	60 Hz	50 Hz	60 Hz	50 Hz	213
C14 (918)	Terminal 1 gain frequency (speed)	60 Hz	50 Hz	60 Hz	50 Hz	400

5.7.16 Extended parameter display and user group function

This function restricts the parameters that are read by the operation panel and parameter unit.

Pr.	Name	Initial value	Setting range	Description
160 E440	User group read selection	0	9999	Only simple mode parameters can be displayed.
			0	Simple mode and extended parameters can be displayed.
			1	Only parameters registered in user groups can be displayed.
172 E441	User group registered display/batch clear	0	(0 to 16)	Displays the number of groups that are registered as user groups. (Read-only)
			9999	Batch clear of user group registrations
173 E442	User group registration	9999*1	0 to 1999, 9999	Sets the parameter number to register for the user group.
174 E443	User group clear	9999*1	0 to 1999, 9999	Sets the parameter number to clear from the user group.

*1 The read value is always "9999".

(1) Display of simple mode parameters and extended parameters (Pr.160)

- When **Pr.160** = "9999", only the simple mode parameters can be displayed on the operation panel (FR-DU08) and parameter unit (FR-PU07). (For the simple mode parameters, refer to the parameter list page 122.)
- With the initial value (**Pr.160** = "0"), simple mode parameters and extended parameters can be displayed.

上正科技有限公司
購買、維修 此手冊零組件
電話： 037-466333
Email: service@repairtw.com
Line id: @zzzz
www.repairtw.com

REMARKS

- When a plug-in option in installed on the inverter, the option parameters can also be read.
- Every parameter can be read regardless of the **Pr.160** setting when reading parameters via a communication option.
- When reading the parameters using the RS-485 terminals, all parameters can be read regardless of the **Pr.160** setting by setting **Pr.550 NET mode operation command source selection** and **Pr.551 PU mode operation command source selection**.

Pr.551	Pr.550	Pr.160 enabled/disabled
1 (RS-485)	-	Enabled
2 (PU) 3 (USB) 9999 (Automatic determination) (Initial value)	0 (Communication option)	Enabled
	1 (RS-485)	Disabled (All can be read)
	9999 (Automatic determination) (Initial value)	With communication option: Enabled
		Without communication option: Disabled (All can be read)

- When the parameter unit (FR-PU07) is installed, **Pr.15 Jog frequency**, **Pr.16 Jog acceleration/deceleration time**, **C42(Pr.934) PID display bias coefficient**, **C43(Pr.934) PID display bias analog value**, **C44(Pr.935) PID display gain coefficient**, **C45(Pr.935) PID display gain analog value** and **Pr.991 PU contrast adjustment** are displayed as simple mode parameters.

(2) User group function (Pr.160, Pr.172 to Pr.174)

- The user group function is a function for displaying only the parameters required for a setting.
- A maximum of 16 parameters from any of the parameters can be registered in a user group. When **Pr.160**="1", reading/writing is enabled only for the parameters registered in user groups. (Parameters not registered in user groups can no longer be read.)
- To register a parameter in a user group, set the parameter number in **Pr.173**.
- To clear a parameter from a user group, set the parameter number in **Pr.174**. To batch clear all the registered parameters, set **Pr.172** ="9999".

(3) Registering a parameter in a user group (Pr.173)

• To register **Pr.3** in a user group

Operation

1.	Power ON Make sure the motor is stopped.
2.	Changing the operation mode Press [PU EXT] to choose the PU operation mode. [PU] indicator is on.
3.	Parameter setting mode Press [MODE] to select the parameter setting mode. (The parameter number read previously appears.)
4.	Selecting the parameter number Turn dial until P. 173 (**Pr.173**) appears.
5.	Selecting the parameter number Press [SET] to display " 9999 ".
6.	Parameter registration Turn dial until 3 (**Pr.3**) appears. Press [SET] to register the parameter. P. 173 and 3 flicker alternately. To continue adding parameters, repeat steps 5 and 6.

(4) Clearing a parameter from a user group (Pr.174)

• To delete **Pr.3** from a user group

上正科技有限公司
購買、維修 此手冊零組件
電話： 037-466333
Email: service@repairtw.com
Line Id: @2zzz
www.repairtw.com

Operation

1.	Power ON Make sure the motor is stopped.
2.	Changing the operation mode Press [PU EXT] to choose the PU operation mode. [PU] indicator is on.
3.	Parameter setting mode Press [MODE] to select the parameter setting mode. (The parameter number read previously appears.)
4.	Selecting the parameter number Turn dial until P. 174 (**Pr.174**) appears.
5.	Selecting the parameter number Press [SET] to display " 9999 ".
6.	Clearing the parameter Turn dial until 3 (**Pr.3**) appears. Press [SET] to delete the parameter. P. 174 and 3 flicker alternately. To continue deleting parameters, repeat steps 5 and 6.

REMARKS

- **Pr.77 Parameter write selection**, **Pr.160** and **Pr.991 PU contrast adjustment** can always be read regardless of the user group setting. (For **Pr.991**, only when the FR-PU07 is connected.)
- **Pr.77**, **Pr.160**, **Pr.172 to Pr.174**, **Pr.296 Password lock level**, and **Pr.297 Password lock/unlock** cannot be registered in a user group.
- When **Pr.174** is read, "9999" is always displayed. "9999" can be written, but it does not function.
- **Pr.172** is disabled if set to a value other than "9999".

♦ Parameters referred to ♦

Pr.15 Jog frequency, Pr.16 Jog acceleration/deceleration time ☞ page 318
Pr.77 Parameter write selection ☞ page 260
Pr.296 Password lock level, Pr.297 Password lock/unlock ☞ page 262
Pr.550 NET mode operation command source selection ☞ page 308
Pr.551 PU mode operation command source selection ☞ page 308
Pr.991 PU contrast adjustment ☞ page 254

5.7.17 PWM carrier frequency and Soft-PWM control

The motor sound can be changed.

Pr.	Name	Initial value	Setting range	Description
72 E600	PWM frequency selection	2	0 to 15*1	The PWM carrier frequency can be changed. The setting displayed is in [kHz]. Note that 0 indicates 0.7 kHz, 15 indicates 14.5 kHz, and 25 indicates 2.5 kHz. (The setting value "25" is for the sine wave filter.)
			0 to 6, 25*2	
240 E601	Soft-PWM operation selection	1	0	Soft-PWM disabled
			1	The soft-PWM is enabled.
260 E602	PWM frequency automatic switchover	1	0	The PWM carrier frequency is constant regardless of the load. When the carrier frequency is set to 3 kHz or higher (**Pr.72** ≥ 3), perform continuous operation at less than 85% of the inverter rated current.
			1	When the load increases, the PWM carrier frequency is reduced.

*1 The setting range for the FR-A820-03160(55K) or lower and FR-A840-01800(55K) or lower.
*2 The setting range for the FR-A820-03800(75K) or higher and FR-A840-02160(75K) and higher.

(1) Changing the PWM carrier frequency (Pr.72)

- The PWM carrier frequency of the inverter can be changed.
- Changing the PWM carrier frequency can be effective for avoiding the resonance frequency of the mechanical system or motor, as a countermeasure against EMI generated from the inverter, or for reducing leakage current caused by PWM switching.
- Under Real sensorless vector control, vector control, and PM sensorless vector control, the following carrier frequencies are used. (For the control method and fast-response mode selection, refer to **Pr.800 Control method selection** page 160.)

上正科技有限公司
購買、維修 此手冊零組件
電話： 037-466593
Email: service@repairtw.com
Line Id: @zzzz
www.repairtw.com

Pr.72 setting	Carrier frequency (kHz)		
	Real sensorless vector control, vector control	PM sensorless vector control	Fast-response mode
0 to 5	2	6*1	4
6, 7	6*2	6	
8, 9			
10 to 13	10*2	10	
14, 15	14*2	14	

*1 When low-speed range high-torque characteristic is disabled (**Pr.788**="0"), 2 kHz is used.
*2 In the low-speed range (3 Hz or lower) under Real sensorless vector control, the carrier frequency is automatically changed to 2 kHz. (For FR-A820-00490(7.5K) or lower and FR-A840-00250(7.5K) or lower)

- When using the optional sine wave filter (MT-BSL/BSC), set **Pr.72** = "25" (2.5 kHz). (FR-A820-03800(75K) or higher, FR-A840-02160(75K).)

REMARKS

- When **Pr.72**="25", the following limitations apply.
  -V/F control is forcibly set.
  -Soft-PWM control is disabled.
  -The maximum output frequency is 60 Hz.

(2) Soft-PWM control (Pr.240)

- Soft-PWM control is a control method that changes the motor noise from a metallic sound into an inoffensive, complex tone.
- Setting **Pr.240** = "1" will enable the Soft-PWM control.
- To enable the Soft-PWM control for the FR-A820-03160(55K) or lower and FR-A840-01800(55K) or lower, set **Pr.72** to "5 kHz or less".
  To enable it for the FR-A820-03800(75K) or higher and FR-A840-02160(75K) or higher , set **Pr.72** to "4 kHz or less".

REMARKS

- While a sine wave filter (**Pr.72** = "25") is being used, the Soft-PWM control is disabled.

(3) PWM carrier frequency automatic reduction function (Pr.260)

- Setting **Pr.260**="1 (initial value)" will enable the PWM carrier frequency auto-reduction function. If a heavy load is continuously applied while the inverter carrier frequency is set to 3 kHz or higher (**Pr.72** ≥ "3"), the carrier frequency is automatically reduced to prevent occurrence of the inverter overload trip (electronic thermal O/L relay function) (E.THT). The carrier frequency is reduced to as low as 2 kHz. (Motor noise increases, but not to the point of failure.)
- With the LD and SLD ratings (**Pr.570 Multiple rating setting**="0 or 1"), the auto-reduction function is activated for a continuous operation with the 85% or higher rated inverter current (the value in parentheses in the rated inverter current on page 670).
- With the ND and HD ratings (**Pr.570**="2 or 3"), the auto-reduction function is activated for a continuous operation with the 150% or higher rated inverter current (the value in parentheses in the rated inverter current on page 670).
- When continuous operation with FR-A840-03250(110K) or higher is performed at 85% of the rated inverter current (the value in parentheses in the rated inverter current on page 670) or higher, the automatic reduction function is activated regardless of the **Pr.570** setting.
- When **Pr.260**="0", the carrier frequency becomes constant (**Pr.72** setting) regardless of the load, making the motor sound uniform. However, when the SLD rating is selected, (**Pr.570**="0"), the operation is the same as **Pr.260**="1".

REMARKS

- Reducing the PWM carrier frequency is effective as a countermeasure against EMI from the inverter or for reducing leakage current, but doing so increases the motor noise.
- When the PWM carrier frequency is set to 1 kHz or lower (**Pr.72** ≤ 1), the increase in the harmonic current causes the fast-response current limit to activate before the stall prevention operation, which may result in torque shortage. In this case, disable the fast-response current limit in **Pr.156 Stall prevention operation selection**.
- The lower limit of carrier frequency after the reduction under PM sensorless vector control (low-speed range high-torque characteristic enabled) is 6 kHz.
- During fast-response operation, the carrier frequency automatic reduction function is disabled.

♦ Parameters referred to ♦

Pr.156 Stall prevention operation selection ☞ page 336
Pr.570 Multiple rating setting ☞ page 258
Pr.788 Low speed range torque characteristic selection ☞ page 173
Pr.800 Control method selection ☞ page 160

上正科技有限公司 購買、維修 此手冊零組件 電話： 037-466333 Email: service@repairtw.com Line id: @zzzz www.repairtw.com

5.7.18 Inverter parts life display

The degree of deterioration of the control circuit capacitor, main circuit capacitor, cooling fan, and inrush current limit circuit can be diagnosed on the monitor.
When a part approaches the end of its life, an alarm can be output by self diagnosis to prevent a fault.
(Note that the life diagnosis of this function should be used as a guideline only, because with the exception of the main circuit capacitor, the life values are theoretical calculations.)

Pr.	Name	Initial value	Setting range	Description
255 E700	**Life alarm status display**	0	(0 to 15)*1	Displays whether or not the parts of the control circuit capacitor, main circuit capacitor, cooling fan, and inrush current limit circuit have reached the life alarm output level. Read-only.
256 E701	**Inrush current limit circuit life display**	100%	(0 to 100%)	Displays the deterioration degree of the inrush current limit circuit. Read-only.
257 E702	**Control circuit capacitor life display**	100%	(0 to 100%)	Displays the deterioration degree of the control circuit capacitor. Read-only.
258 E703	**Main circuit capacitor life display**	100%	(0 to 100%)	Displays the deterioration degree of the main circuit capacitor. Read-only. The value measured by **Pr.259** is displayed.
259 E704	**Main circuit capacitor life measuring**	0	0, 1 (2, 3, 8, 9)	Setting "1" and turning the power supply OFF starts the mea surement of the main circuit capacitor life. If the setting value of **Pr.259** becomes "3" after turning the power supply ON again, it means that the measurement is completed. The deterioration degree is read to **Pr.258**.

*1 The setting range (reading only) for IP55 compatible modes is "0 to 31".

(E) Environment setting parameters

(1) Life alarm display and signal output (Y90 signal, Pr.255)

POINT

In the life diagnosis of the main circuit capacitor, the alarm signal (Y90) is not output unless measurement by turning OFF the power supply is performed.

- Whether or not the parts of the control circuit capacitor, main circuit capacitor, cooling fan, inrush current limit circuit or internal air circulation fans have reached the life alarm output level can be checked with **Pr.255 Life alarm status display** and the life alarm signal (Y90). (Internal air circulation fans are equipped with IP55 compatible models.)

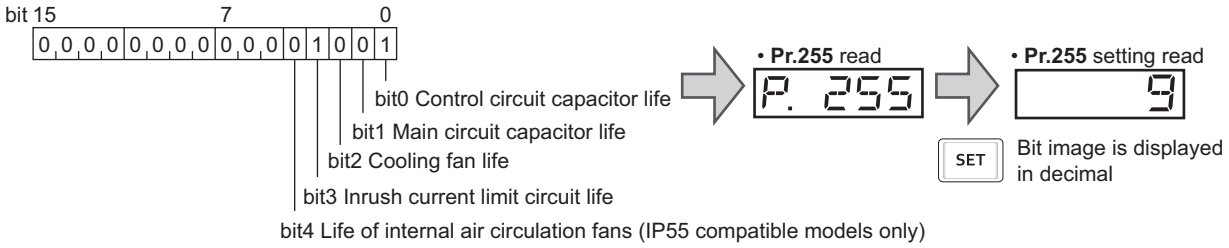

Pr.255		bit3	bit2	bit1	bit0	Pr.255		bit4	bit3	bit2	bit1	bit0
Decimal	Binary					Decimal	Binary					
15	1111	○	○	○	○	31*1	11111	○	○	○	○	○
14	1110	○	○	○	×	30*1	11110	○	○	○	○	×
13	1101	○	○	×	○	29*1	11101	○	○	○	×	○
12	1100	○	○	×	×	28*1	11100	○	○	○	×	×
11	1011	○	×	○	○	27*1	11011	○	○	×	○	○
10	1010	○	×	○	×	26*1	11010	○	○	×	○	×
9	1001	○	×	×	○	25*1	11001	○	○	×	×	○
8	1000	○	×	×	×	24*1	11000	○	○	×	×	×
7	0111	×	○	○	○	23*1	10111	○	×	○	○	○
6	0110	×	○	○	×	22*1	10110	○	×	○	○	×
5	0101	×	○	×	○	21*1	10101	○	×	○	×	○
4	0100	×	○	×	×	20*1	10100	○	×	○	×	×
3	0011	×	×	○	○	19*1	10011	○	×	×	○	○
2	0010	×	×	○	×	18*1	10010	○	×	×	○	×
1	0001	×	×	×	○	17*1	10001	○	×	×	×	○
0	0000	×	×	×	×	16*1	10000	○	×	×	×	×

○: With warnings, ×: Without warnings

*1 The setting range is "16 to 31" for the IP55 compatible model.

上正科技有限公司
購買、維修 此手冊零組件
電話： 037-466033
Email: service@repairtw.com
Line Id: @zzzz
www.repairtw.com

- The life alarm signal (Y90) turns ON when any of the control circuit capacitor, main circuit capacitor, cooling fan, inrush current limit circuit or internal air circulation fans reaches the life alarm output level.
- For the terminal used for the Y90 signal, set "90" (positive logic) or "190" (negative logic) in any of **Pr.190 to Pr.196 (output terminal function selection)**.

REMARKS

- When using an option (FR-A8AY, FR-A8AR, FR-A8NC, FR-A8NCE), the life can be output separately to the control circuit capacitor life signal (Y86), main circuit capacitor life signal (Y87), cooling fan life signal (Y88), and inrush current limit circuit life signal (Y89).
- Changing the terminal assignment using **Pr.190 to Pr.196 (output terminal function selection)** may affect the other functions. Set parameters after confirming the function of each terminal.

(2) Life display of the inrush current limit circuit (Pr.256)

- The life of the inrush current limit circuit (relay, contactor and inrush resistor) is displayed in **Pr.256**.
- The number of contact (relay, contactor, thyristor) ON times is counted, and it is counted down from 100% (0 time) every 1%/10,000 times. As soon as 10% (900,000 times) is reached, **Pr.255** bit 3 is turned ON and also a warning is output to the Y90 signal.

(3) Life display of the control circuit capacitor (Pr.257)

- The deterioration degree of the control circuit capacitor is displayed in **Pr.257**.

- In the operating status, the control circuit capacitor life is calculated from the energization time and temperature, and is counted down from 100%. As soon as the control circuit capacitor life falls below 10%, **Pr.255** bit 0 is turned ON and also a warning is output to the Y90 signal

(4) Life display of the main circuit capacitor (Pr.258, Pr.259)

POINT

For accurate life measurement of the main circuit capacitor, wait three hours or longer after turning OFF. The temperature left in the main circuit capacitor affects measurement.

- The deterioration degree of the main circuit capacitor is displayed in **Pr.258**.
- With the main circuit capacitor capacity at factory shipment as 100%, the capacitor life is displayed in **Pr.258** every time measurement is made. When the measured value falls to 85% or lower, **Pr.255** bit 1 is turned ON and also a warning is output to the Y90 signal.
- Measure the capacitor capacity according to the following procedure and check the deterioration degree of the capacitor capacity.
  1) Check that the motor is connected and at a stop.
  2) Set "1" (measuring start) in **Pr.259**.
  3) Switch the power OFF. The inverter applies DC voltage to the motor to measure the capacitor capacity while the inverter is OFF.
  4) After confirming that the power lamp is OFF, turn ON the power again.
  5) Check that "3" (measurement complete) is set in **Pr.259**, read **Pr.258**, and check the deterioration degree of the main circuit capacitor.

Pr.259	Description	REMARKS
0	No measurement	Initial value
1	Measurement start	Measurement starts when the power supply is switched OFF
2	During measurement	Only displayed and cannot be set
3	Measurement complete	
8	Forced end	
9	Measurement error	

汇正科技有限公司
購買、維修 此手冊零組件
電話: 037-466333
Email: service@repairtw.com
Line id: @zzzz
www.repairtw.com

REMARKS

- When the main circuit capacitor life is measured under the following conditions, "forced end" (**Pr.259** = "8") or", easurement error" (**Pr.259** = "9") may occur, or the status may remain in "measurement start" (**Pr.259** ="1"). To perform measurement, first eliminate the following conditions. Under the following conditions, even if "measurement complete" (**Pr.259** ="3") is reached, measurement cannot be performed correctly.
  -FR-HC2, FR-CV, MT-RC, or a sine wave filter is connected.
  -Terminals R1/L11, S1/L21 or DC power supply is connected to terminals P/+ and N/-.
  -The power supply is switched ON during measurement.
  -The motor is not connected to the inverter.
  -The motor is running (coasting).
  -The motor capacity is smaller than the inverter capacity by two ranks or more.
  -The inverter is tripped or a fault occurred while the power was OFF.
  -The inverter output is shut off with the MRS signal.
  -The start command is given while measuring.
  -The applied motor setting is incorrect.
- Operation environment: surrounding air temperature (annual average of 40°C (free from corrosive gas, flammable gas, oil mist, dust and dirt)).
  Output current (80% of the inverter rating)
- Since repeated inrush currents at power ON will shorten the life of the converter circuit, frequent starts and stops of the magnetic contactor must be avoided.

⚠ WARNING

⚠ When measuring the main circuit capacitor capacity (Pr.259 ="1"), the DC voltage is applied to the motor for about 1 s at power OFF. Never touch the motor terminal, etc. right after powering OFF to prevent an electric shock.

(E) Environment setting parameters

(5) Life display of the cooling fan

- If a cooling fan speed of less than the specified speed (refer below) is detected, Fan alarm FN (FN) is displayed on the operation panel (FR-DU08) and parameter unit (FR-PU07). As an alarm display, **Pr.255** bit 2 is turned ON and also a warning is output to the Y90 signal and Alarm (LF) signal.
- For the terminal used for the LF signal, set "98" (positive logic) or "198" (negative logic) in any of **Pr.190 to Pr.196 (output terminal function selection)**.

Capacity	Warning level
FR-A820-00250(3.7K) or lower, FR-A820-03160(55K) or higher FR-A840-00126(3.7K) or lower	Less than 50%
FR-A820-00340(5.5K) to FR-A820-02330(45K) FR-A840-00170(5.5K) to FR-A840-03610(132K)	Less than 70%
FR-A840-04320(160K) or higher	Approx. less than 1700 r/min

REMARKS

- When the inverter is mounted with two ore more cooling fans, "FN" is displayed with one or more fans with speed of 50% or less.
- Changing the terminal assignment using **Pr.190 to Pr.196 (output terminal function selection)** may affect the other functions. Set parameters after confirming the function of each terminal.
- For replacement of each part, contact the nearest Mitsubishi FA center.

(6) Life display of internal air circulation fans (IP55 compatible models)

- IP55 compatible models are equipped with the internal air circulation fan inside the inverter other than the cooling fan. If an internal air circulation fan speed of less than the specified speed is detected, Internal-circulation fan alarm FN2 (FN2) is displayed on the operation panel (FR-DU08). (FN is displayed on the parameter unit (FR-PU07).) As an alarm display, **Pr.255** bit 4 is turned ON and also a warning is output to the Y90 signal and Alarm (LF) signal.
- For the terminal used for the LF signal, set "98" (positive logic) or "198" (negative logic) in any of **Pr.190 to Pr.196 (output terminal function selection)**.

台灣科技有限公司
購買、維修 此手冊零組件
電話： 037-466333
Email: service@repairtw.com
Line Id: @2222
www.repairtw.com

REMARKS

- Changing the terminal assignment using **Pr.190 to Pr.196 (output terminal function selection)** may affect the other functions. Set parameters after confirming the function of each terminal.
- For replacement of each part, contact the nearest Mitsubishi FA center.

5.7.19 Maintenance timer alarm

The maintenance timer output signal (Y95) is output when the inverter's cumulative energization time reaches the time period set with the parameter. MT1, MT2 or MT3 is displayed on the operation panel (FR-DU08).
This can be used as a guideline for the maintenance time of peripheral devices.

Pr.	Name	Initial value	Setting range	Description
503 **E710**	**Maintenance timer 1**	0	0(1 to 9998)	Displays the inverter's cumulative energization time in increments of 100 h (read-only). Writing the setting of "0" clears the cumulative energization time while **Pr.503** = "1 to 9998". (Writing is disabled when **Pr.503** = "0".)
504 **E711**	**Maintenance timer 1 warning output set time**	9999	0 to 9998	Set the time until the maintenance timer signal (Y95) is output. MT1 is displayed on the operation panel.
			9999	No function
686 **E712**	**Maintenance timer 2**	0	0(1 to 9998)	The same function as **Pr.503**.
687 **E713**	**Maintenance timer 2 warning output set time**	9999	0 to 9998	The same function as **Pr.504**.
			9999	MT2 is displayed on the operation panel.
688 **E714**	**Maintenance timer 3**	0	0(1 to 9998)	The same function as **Pr.503**.
689 **E715**	**Maintenance timer 3 warning output set time**	9999	0 to 9998	The same function as **Pr.504**.
			9999	MT3 is displayed on the operation panel.

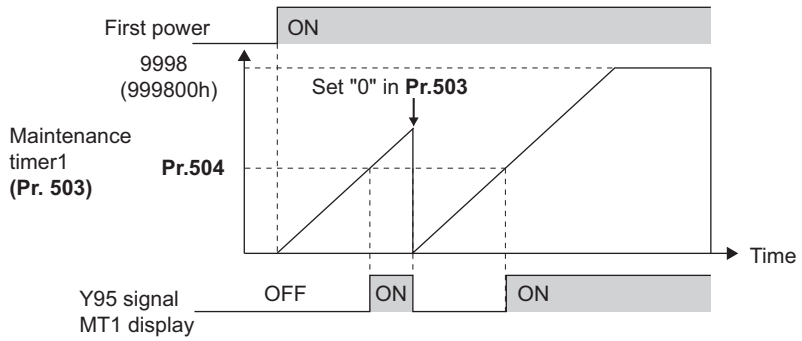

Operation example of the maintenance timer 1 (**Pr.503, Pr.504**) (with both MT2 and MT3 OFF)

- The cumulative energization time of the inverter is stored in the EEPROM every hour and displayed in **Pr.503 (Pr.686, Pr.688)** in 100 h increments. **Pr.503 (Pr.686, Pr.688)** is clamped at 9998 (999800 h).
- When the value in **Pr.503 (Pr.686, Pr.688)** reaches the time (100 h increments) set in **Pr.504 (Pr.687, Pr.689)**, Maintenance timer signal (Y95) is output, and also MT 1 (MT1), MT 2 (MT2), or MT 3 (MT3) is displayed on the operation panel.
- For the terminal used for Y95 signal output, assign the function by setting "95 (positive logic)" or "195 (negative logic)" in any of **Pr.190 to Pr.196 (output terminal function selection)**.

REMARKS

- The Y95 signal turns ON when any of MT1, MT2 or MT3 is activated. It does not turn OFF unless all of MT1, MT2 and MT3 are cleared.
- If all of MT1, MT2 and MT3 are activated, they are displayed in the priority of "MT1 > MT2 > MT3".
- MT is displayed on the FR-PU07 parameter unit if any of MT1, MT2 or MT3 is activated.
- The cumulative energization time is counted every hour. Energization time of less than 1 h is not counted.
- Changing the terminal assignment using **Pr.190 to Pr.196 (output terminal function selection)** may affect the other functions. Set parameters after confirming the function of each terminal.

印刷廠有限公司
購買、維修 此手冊零組件
電話： 037-466333
Email: service@repairtw.com
www.repairtw.com

♦ **Parameters referred to** ♦

Pr.190 to Pr.196 (output terminal function selection) page 370

5.7.20 Current average value monitor signal

The output current average value during constant-speed operation and the maintenance timer value are output to the current average value monitor signal (Y93) as a pulse. The output pulse width can be used in a device such as the I/O unit of a programmable controller as a guideline for the maintenance time for mechanical wear, belt stretching, or deterioration of devices with age.

The pulse is repeatedly output during constant-speed operation in cycles of 20 s to the Current average monitor signal (Y93).

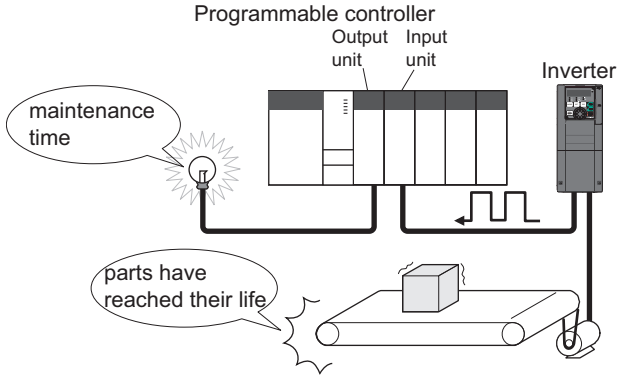

Pr.	Name	Initial value	Setting range	Description
555 E720	**Current average time**	1 s	0.1 to 1 s	Set the time for calculating the average current during start pulse output (1 s).
556 E721	**Data output mask time**	0 s	0 to 20 s	Set the time for not obtaining (masking) transitional state data.
557 E722	**Current average value monitor signal output reference current**	Rated inverter current	0 to 500 A*1	Set the reference (100%) for outputting the output current average value signal.
			0 to 3600 A*2	

*1 Initial value for the FR-A820-03160(55K) or lower and FR-A840-01800(55K) or lower.

*2 Initial value for the FR-A820-03800(75K) or higher and FR-A840-02160(75K) and higher.

(E) Environment setting parameters

(1) Operation example

- The pulse output of Current average monitor signal (Y93) is indicated below.
- For the terminal used for Y93 signal output, assign the function by setting "93 (positive logic)" or "193 (negative logic)" in any of **Pr.190 to Pr.194 (output terminal function selection)**. (This cannot be assigned by setting in **Pr.195 ABC1 terminal function selection** or **Pr.196 ABC2 terminal function selection**.)

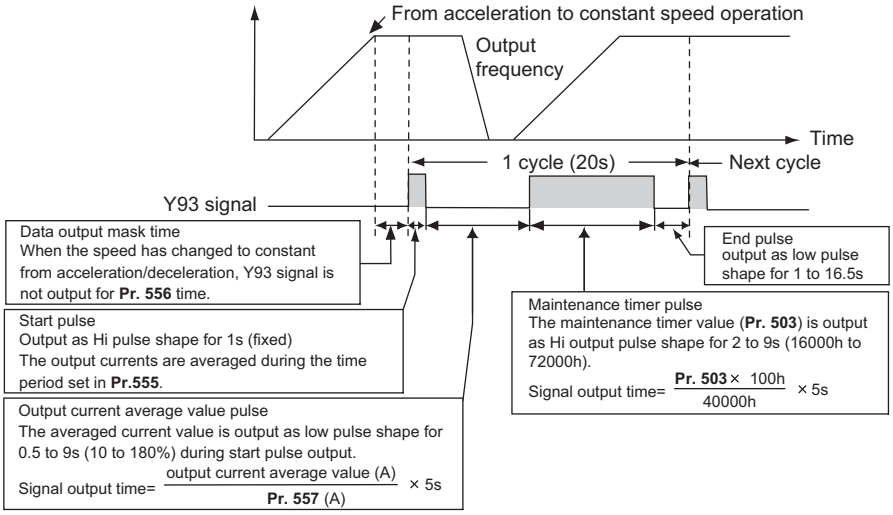

(2) Pr.556 Data output mask time setting

- Immediately after acceleration/deceleration is shifted to constant-speed operation, the output current is unstable (transitional state). Set the time for not obtaining (masking) transitional state data in **Pr.556**.

正正科技有限公司
購買、維修 此手冊零組件
電話： 037-466333
Email: service@repairtw.com
Line Id: @222
www.repairtw.com

(3) Pr.555 Current average time setting

- The output current average is calculated during start pulse (1 s) HIGH output. Set the time for calculating the average current during start pulse output in **Pr.555**.

(4) Pr.557 Current average value monitor signal output reference current setting

- Set the reference (100%) for outputting the output current average value signal. The signal output time is calculated with the following formula.

$$\frac{\textbf{Output current average value}}{\textbf{Pr.557 setting value}} \times \textbf{5 s} \qquad \textbf{(Output current average value 100\%/5 s)}$$

The output time range is 0.5 to 9 s. When the output current average value is less than 10% of the setting value in **Pr.557**, the output time is 0.5 s, and when it is more than 180%, the output time is 9 s.

For example, when **Pr.557** = "10 A" and the output current average value is 15 A:

15 A/10 A × 5 s = 7.5 s, thus the current average value monitor signal is Low output in 7.5 s intervals.

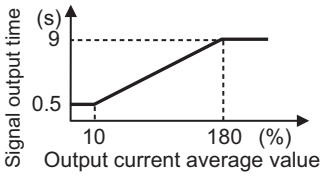

(5) Pr.503 Maintenance timer 1 output

- After LOW output of the output current value is performed, HIGH output of the maintenance timer value is performed. The maintenance timer value output time is calculated with the following formula.

$$\frac{\textbf{Pr.503} \times 100}{\textbf{40000 h}} \times \textbf{5 s} \quad \textbf{(Maintenance timer value 100%/5 s)}$$

The output time range is 2 to 9 s. When **Pr.503** is less than 16000 h, the output time is 2 s, and when it is more than 72000 h, the output time is 9 s.

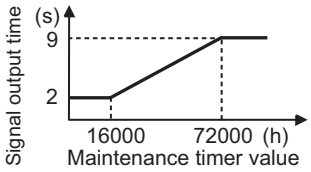

REMARKS

- Masking of the data output and sampling of the output current are not performed during acceleration/deceleration.
- If constant speed changes to acceleration or deceleration during start pulse output, it is judged as invalid data, and HIGH output in 3.5 s intervals is performed for the start pulse and LOW output in 16.5 s intervals is performed for the end signal. After the start pulse output is completed, minimum 1-cycle signal output is performed even if acceleration/deceleration is performed.

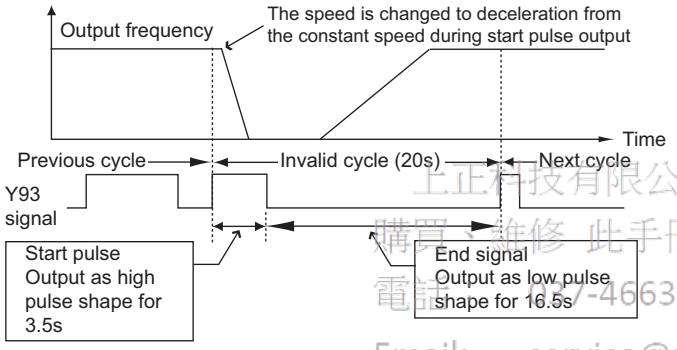

上正有限公司
購買、維修 此手冊零組件
電話: 07-466333
Email: service@repairtw.com
Line id: @zzzz
www.repairtw.com

- If the output current value (inverter output current monitor) is 0 A at the completion of the 1-cycle signal output, no signal is output until the next constant-speed state.
- Under the following conditions, the Y93 signal is output with Low output in 20 s intervals (no data output).
  -When acceleration or deceleration is operating at the completion of the 1-cycle signal output
  -When automatic restart after instantaneous power failure (**Pr.57 Restart coasting time** ≠ "9999") is set, and the 1-cycle signal output is completed during the restart operation
  -When automatic restart after instantaneous power failure (**Pr.57** ≠ "9999") is set, and the restart operation was being performed at the completion of data output masking
- **Pr.686 Maintenance timer 2** and **Pr.688 Maintenance timer 3** cannot be output.
- Changing the terminal assignment using **Pr.190 to Pr.196 (output terminal function selection)** may affect the other functions. Set parameters after confirming the function of each terminal.

♦ Parameters referred to ♦

Pr.57 Restart coasting time ☞page 511, page 517
Pr.190 to Pr.196 (output terminal function selection) ☞page 370
Pr.503 Maintenance timer 1, Pr.686 Maintenance timer 2, Pr.688 Maintenance timer 3 ☞page 274

5.8 (F) Setting of acceleration/deceleration time and acceleration/deceleration pattern

Purpose	Parameter to set			Refer to page
To set the motor acceleration/ deceleration time	Acceleration/deceleration time	P.F000 to P.F003, P.F010, P.F011, P.F020 to P.F022, P.F030, P.F031, P.F040, P.F070, P.F071	Pr.7, Pr.8, Pr.16, Pr.20, Pr.21, Pr.44, Pr.45, Pr.110, Pr.111, Pr.147, Pr.611, Pr.791, Pr.792, Pr.1103	278
To set the acceleration/deceleration pattern suitable for an application	Acceleration/deceleration pattern and backlash measures	P.F100, P.F200 to P.F204, P.F300 to P.F304, P.F400 to P.F404	Pr.29, Pr.140 to Pr.143, Pr.380 to Pr.383, Pr.516 to Pr.519	283
To command smooth speed transition with terminals	Remote setting function	P.F101	Pr.59	288
To set the starting frequency	Starting frequency and start-time hold	P.F102, P.F103	Pr.13, Pr.571	291, 292
To set optimum acceleration/ deceleration time automatically	Automatic acceleration/ deceleration	P.F500, P.F510 to P.F513	Pr.61 to Pr.63, Pr.292	293
To set V/F pattern for list automatically	List operation (Automatic acceleration/ deceleration)	P.F500, P.F510, P.F520	Pr.61, Pr.64, Pr.292	296

5.8.1 Setting the acceleration and deceleration time

上正科技有限公司
購買、維修 此手冊零組件
電話：037-466383
Email: service@repairtw.com
Line id: @zzzz
www.repairtw.com

The following parameters are used to set motor acceleration/deceleration time.
Set a larger value for a slower acceleration/deceleration, and a smaller value for a faster acceleration/deceleration.
For the acceleration time at automatic restart after instantaneous power failure, refer to **Pr.611 Acceleration time at a restart** (page 511, page 517).

Pr.	Name	Initial value FM	Initial value CA	Setting range	Description
20 F000	Acceleration/deceleration reference frequency	60 Hz	50 Hz	1 to 590 Hz	Set the frequency that will be the basis of acceleration/deceleration time. As acceleration/ deceleration time, set the frequency change time from a stop status to **Pr.20**.
21 F001	Acceleration/deceleration time increments	0		0	Increment: 0.1 s Range: 0 to 3600 s Select the increment for the acceleration/ deceleration time setting and the setting range.
				1	Increment: 0.01 s Range: 0 to 360 s
16 F002	Jog acceleration/ deceleration time	0.5 s		0 to 3600 s (360 s*1)	Set the acceleration/deceleration time for JOG operation (from stop status to **Pr.20**). Refer to page 318
611 F003	Acceleration time at a restart	5 s*2		0 to 3600 s, 9999	Set the acceleration time for restart (from stop status to **Pr.20**). When "9999" is set, standard acceleration time (like **Pr.7**) is applied as the acceleration time at restart. Refer to page 511, page 517.
		15 s*3			
7 F010	Acceleration time	5 s*4		0 to 3600 s (360 s*1)	Set the motor acceleration time (from stop status to **Pr.20**).
		15 s*5			
8 F011	Deceleration time	5 s*4		0 to 3600 s (360 s*1)	Set the motor deceleration time (from **Pr.20** to stop status).
		15 s*5			
44 F020	Second acceleration/ deceleration time	5 s		0 to 3600 s (360 s*1)	Set the acceleration/deceleration time when the RT signal is ON.
45 F021	Second deceleration time	9999		0 to 3600 s (360 s*1)	Set the deceleration time when the RT signal is ON.
				9999	Acceleration time = deceleration time

(F) Setting of acceleration/deceleration time and acceleration/deceleration pattern

Pr.	Name	Initial value		Setting range	Description
		FM	CA		
147 **F022**	**Acceleration/deceleration time switching frequency**	9999		0 to 590 Hz	Set the frequency where the acceleration/deceleration time switches to the time set in **Pr.44** and **Pr.45**.
				9999	No function
110 **F030**	**Third acceleration/deceleration time**	9999		0 to 3600 s (360 s*1)	Set the acceleration/deceleration time when X9 signal is ON.
				9999	Third acceleration/deceleration is disabled.
111 **F031**	**Third deceleration time**	9999		0 to 3600 s (360 s*1)	Set the deceleration time when X9 signal is ON.
				9999	Acceleration time = deceleration time
791 **F070**	**Acceleration time in low-speed range**	9999		0 to 3600 s (360 s*1)	Set the acceleration time in a low-speed range (less than 10% of the rated motor frequency).
				9999	The acceleration time set in **Pr.7** is applied. (When the second functions are enabled, the settings are applied.)
792 **F071**	**Deceleration time in low-speed range**	9999		0 to 3600 s (360 s*1)	Set the deceleration time in a low-speed range (less than 10% of the rated motor frequency).
				9999	The deceleration time set in **Pr.8** is applied. (When the second functions are enabled, the settings are applied.)
1103 **F040**	**Deceleration time at emergency stop**	5 s		0 to 3600 s (360 s*1)	Set the motor deceleration time at a deceleration by turning ON the X92 signal.

*1 Depends on the **Pr.21 Acceleration/deceleration time increments** setting. The initial value for the setting range is "0 to 3600 s", and for the setting increment is "0.1 s".

*2 Initial value for the FR-A820-03160(55K) or lower and FR-A840-01800(55K) or lower.

*3 Initial value for the FR-A820-03800(75K) or higher and FR-A840-02160(75K) and higher.

*4 Initial value for the FR-A820-00490(7.5K) or lower and FR-A840-00250(7.5K) or lower.

*5 Initial value for the FR-A820-00630(11K) or higher and FR-A840-00310(11K) and higher.

PLEASE 購買、維修 此手冊零組件
電話： 037-466333
Email: service@repairtw.com
Line id @zzz
www.repairtw.com

(1) Control block diagram

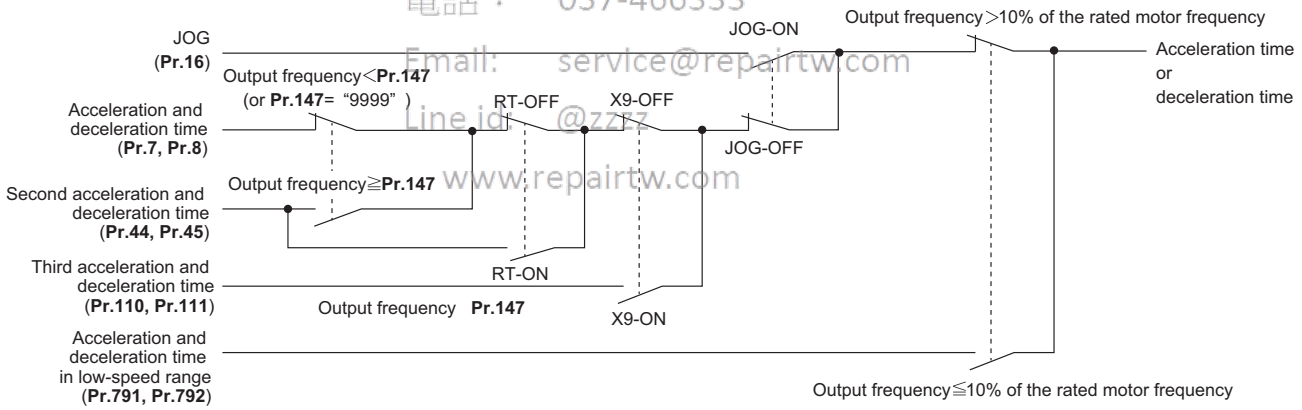

(F) Setting of acceleration/deceleration time and acceleration/deceleration pattern

(2) Acceleration time setting (Pr.7, Pr.20)

- Use **Pr.7 Acceleration time** to set the acceleration time required to reach **Pr.20 Acceleration/deceleration reference frequency** from stop status.
- Set the acceleration time according to the following formula.

Acceleration time setting = **Pr.20** × Acceleration time from stop status to maximum frequency / (maximum frequency - **Pr.13**)

- For example, the following calculation is performed to find the setting value for **Pr.7** when increasing the output frequency to the maximum frequency of 50 Hz in 10 s with **Pr.20** = "60 Hz (initial value)" and **Pr.13** = "0.5 Hz".

Pr.7 = 60 Hz × 10 s / (50 Hz - 0.5 Hz)
≒12.1 s

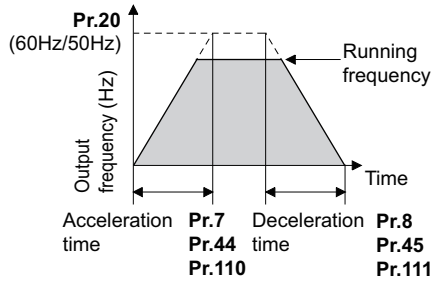

(3) Deceleration time setting (Pr.8, Pr.20)

- Use **Pr.8 Deceleration time** to set the deceleration time required to reach a stop status from to **Pr.20 Acceleration/deceleration reference frequency**.
- Set the deceleration time according to the following formula.

Deceleration time setting = **Pr.20** × deceleration time from maximum frequency to stop / (maximum frequency - **Pr.10**)

- For example, the following calculation is used to find the setting value for **Pr.8** when increasing the output frequency to the maximum frequency of 50 Hz in 10 s with **Pr.20** = 120 Hz and **Pr.10** = 3 Hz.

Pr.8 = 120 Hz × 10 s / (50 Hz - 3 Hz)
≒25.5 s

上正科技有限公司
Email: service@repairtw.com
Line Id: @zzzz
www.repairtw.com

REMARKS

- If the acceleration/deceleration time is set, the actual motor acceleration/deceleration time cannot be made shorter than the shortest acceleration/deceleration time determined by the mechanical system J (moment of inertia) and motor torque.
- If the **Pr.20** setting is changed, the **Pr.125** and **Pr.126** (frequency setting signal gain frequency) settings do not change. Set **Pr.125** and **Pr.126** to adjust the gains.
- Under PM sensorless vector control, if the protective function (E.OLT) is activated due to insufficient torque in the low-speed range, set longer acceleration/deceleration times only in the low-speed range in **Pr.791 Acceleration time in low-speed range** and **Pr.792 Deceleration time in low-speed range**.

(4) Changing the setting range and increments of the acceleration/deceleration time (Pr.21)

- Use **Pr.21** to set the acceleration/deceleration time and minimum setting range.
  Setting value "0" (initial value): 0 to 3600 s (minimum setting increments 0.1 s)
  Setting value "1": 0 to 360 s (minimum setting increments 0.01 s)

REMARKS

- Changing the **Pr.21** setting changes the acceleration/deceleration time setting **(Pr.7, Pr.8, Pr.16, Pr.44, Pr.45, Pr.110, Pr.111, Pr.264, Pr.265)**. (The **Pr. 611 Acceleration time at a restart** setting is not affected.)

(5) Setting multiple acceleration/deceleration times (RT signal, X9 signal, Pr.44, Pr.45, Pr.110, Pr.111, Pr.147)

- **Pr.44 and Pr.45** are valid when the RT signal is ON or when the output frequency is equal to or higher than the frequency set in **Pr.147 Acceleration/deceleration time switching frequency**. **Pr.110 and Pr.111** are valid when the X9 signal is ON.
- Even at the frequency lower than the **Pr.147** setting, turning ON the RT signal (X9 signal) will switch the acceleration/deceleration time to the second (third) acceleration/deceleration time. The priority of the signals and settings is X9 signal > RT signal > **Pr.147** setting.
- To input the X9 signal, set "9" in any of **Pr.178 to Pr.189 (input terminal function selection)** to assign the function to the terminal.
- When "9999" is set in **Pr. 45 and Pr.111**, the deceleration time becomes equal to the acceleration time (**Pr. 44, Pr.110**).
- When **Pr.110** ="9999" is set, the third acceleration/deceleration function is disabled.
- If the **Pr.147** setting is equal to or less than the **Pr.10 DC injection brake operation frequency** or the **Pr.13 Starting frequency** setting, the acceleration/deceleration time switches to the **Pr.44 (Pr.45)** when the output frequency reaches or exceeds the **Pr.10 or Pr.13** setting.

Pr.147 setting	Acceleration/deceleration time	Description
9999 (initial value)	**Pr.7, Pr.8**	Acceleration/deceleration time is not automatically changed.
0.00 Hz	**Pr.44, Pr.45**	Second acceleration/deceleration time is applied from the start.
0.01 Hz ≤ **Pr.147** ≤ set frequency	Output frequency < **Pr.147**: **Pr.7, Pr.8** **Pr.147** ≤ output frequency: **Pr.44, Pr.45**	Acceleration/deceleration time is automatically changed.
Set frequency < **Pr.147**	**Pr.7, Pr.8**	Not changed as the frequency has not reached the switchover frequency.

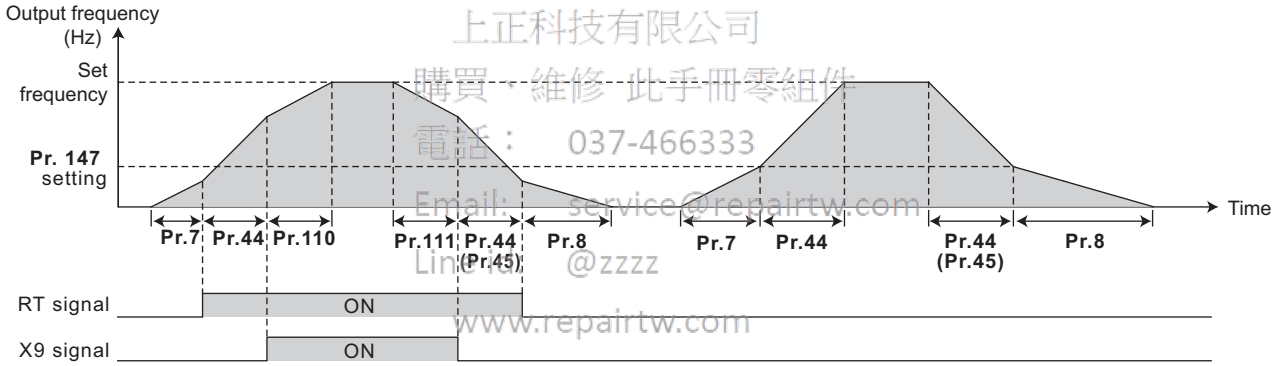

上正科技有限公司
購買・維修 此手冊零組件
電話： 037-466333
Email: service@repairtw.com
Line id @zzzz
www.repairtw.com

- Switching frequency for each control method

Control method	Switching frequency
V/F control	Output frequency
Advanced magnetic flux vector control	Output frequency before the slip compensation.
Real sensorless vector control, PM sensorless vector control	Estimated speed converted as frequency
Vector control Encoder feedback control	Actual motor speed converted as frequency

REMARKS

- The reference frequency during acceleration/deceleration depends on the **Pr.29 Acceleration/deceleration pattern selection** setting. (Refer to page 283.)
- The RT and X9 signals can be assigned to an input terminal by setting **Pr.178 to Pr.189 (input terminal function selection)**. Changing the terminal assignment may affect other functions. Set parameters after confirming the function of each terminal.
- The RT (X9) signal acts as the second (third) function selection signal and makes the other second (third) functions valid. (Refer to page 420.)
- RT signal is assigned to the terminal RT in the initial status. Set "3" in any of **Pr.178 to Pr.189 (input terminal function selection)** to assign the RT signal to another terminal.

(F) Setting of acceleration/deceleration time and acceleration/deceleration pattern

(6) Setting the acceleration/deceleration time in the low-speed range (Pr.791, Pr.792)

- If torque is required in the low-speed range (less than 10% of the rated motor frequency) under PM sensorless vector control, set the **Pr.791 Acceleration time in low-speed range** and **Pr.792 Deceleration time in low-speed range** settings higher than the **Pr.7 Acceleration time and Pr.8 Deceleration time** settings so that the mild acceleration/deceleration is performed in the low-speed range.

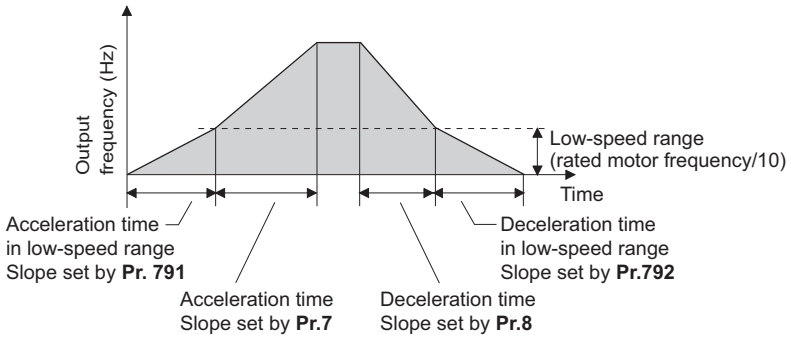

REMARKS

- Set **Pr.791** higher than **Pr.7**, and **Pr.792** higher than **Pr.8**. If set as **Pr.791** < **Pr.7**, the operation is performed as **Pr.791** = **Pr.7**. If set as **Pr.792** < **Pr.8**, the operation is performed as **Pr.792** = **Pr.8**.
- Refer to page 674 for the rated motor frequency of MM-CF.

(7) Emergency stop function (Pr.1103)

- When the emergency stop (X92) signal is ON, the deceleration stop is performed according to the settings in the **Pr.1103 Deceleration time at emergency stop** and **Pr.815 Torque limit level 2**.
- To input the X92 signal, set "92" in any of **Pr.178 to Pr.189 (input terminal function selection)** to assign the function to a terminal.
- The X92 signal is a normally closed input (NC contact input).
- [PS] is displayed on the operation panel during activation of the emergency stop function.

Email: service@repairtw.com
www.repairtw.com

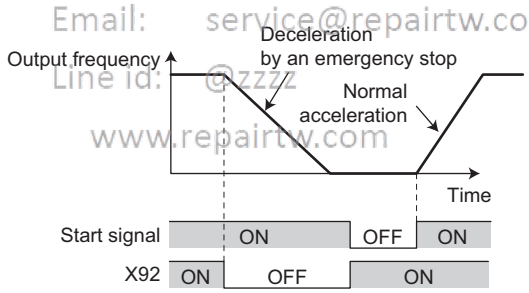

REMARKS

- The X92 signals can be assigned to an input terminal by setting **Pr.178 to Pr.189 (input terminal function selection)**. Changing the terminal assignment may affect other functions. Set parameters after confirming the function of each terminal.

♦ Parameters referred to ♦

Pr.3 Base frequency ☞ page 578
Pr.10 DC injection brake operation frequency ☞ page 584
Pr.29 Acceleration/deceleration pattern selection ☞ page 283
Pr.125, Pr.126 (frequency setting gain frequency) ☞ page 400
Pr.178 to Pr.182 (input terminal function selection) ☞ page 416
Pr.264 Power-failure deceleration time 1, Pr.265 Power-failure deceleration time 2 ☞ page 523

5.8.2 Acceleration/deceleration pattern

The acceleration/deceleration pattern can be set according to the application.
In addition, the backlash measures that stop acceleration/deceleration by the frequency or time set with parameters at acceleration/deceleration can be set.

Pr.	Name	Initial value	Setting range	Description
29 F100	**Acceleration/deceleration pattern selection**	0	0	Linear acceleration/deceleration
			1	S-pattern acceleration/deceleration A
			2	S-pattern acceleration/deceleration B
			3	Backlash measures
			4	S-pattern acceleration/deceleration C
			5	S-pattern acceleration/deceleration D
			6	Variable-torque acceleration/deceleration
140 F200	**Backlash acceleration stopping frequency**	1 Hz	0 to 590 Hz	Set the stopping frequency and time during backlash measures. Valid by backlash measures (**Pr.29**="3").
141 F201	**Backlash acceleration stopping time**	0.5 s	0 to 360 s	
142 F202	**Backlash deceleration stopping frequency**	1 Hz	0 to 590 Hz	
143 F203	**Backlash deceleration stopping time**	0.5 s	0 to 360 s	
380 F300	**Acceleration S-pattern 1**	0	0 to 50%	Set the time for drawing the S-pattern from acceleration/deceleration start to linear acceleration as a ratio (%) of acceleration/deceleration time (**Pr.7, 8**, etc.). The acceleration/deceleration curve can be switched by the X20 signal. Valid by S-pattern acceleration/deceleration C (**Pr.29**="4").
381 F301	**Deceleration S-pattern 1**	0	0 to 50%	
382 F302	**Acceleration S-pattern 2**	0	0 to 50%	
383 F303	**Deceleration S-pattern 2**	0	0 to 50%	
516 F400	**S-pattern time at a start of acceleration**	0.1 s	0.1 to 2.5 s	Set the time required for acceleration (S-pattern) of S-pattern acceleration/deceleration. Valid by S-pattern acceleration/deceleration D (**Pr.29**="5").
517 F401	**S-pattern time at a completion of acceleration**	0.1 s	0.1 to 2.5 s	
518 F402	**S-pattern time at a start of deceleration**	0.1 s	0.1 to 2.5 s	
519 F403	**S-pattern time at a completion of deceleration**	0.1 s	0.1 to 2.5 s	

上正科技有限公司
購買、維修 此手冊零組件
電話： 037-466333
Email: service@repairtw.com
Line id: @zzzz
www.repairtw.com

(1) Linear acceleration/deceleration (Pr.29="0" initial value)

- When the frequency is changed for acceleration, deceleration, etc. during inverter operation, the output frequency is changed linearly (linear acceleration/deceleration) to reach the set frequency without straining the motor and inverter. Linear acceleration/deceleration has a uniform frequency/time slope.

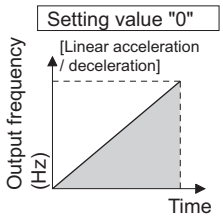

(F) Setting of acceleration/deceleration time and acceleration/deceleration pattern

(2) S-pattern acceleration/deceleration A (Pr.29="1")

- Use this when acceleration/deceleration is required for a short time until a high-speed area equal to or higher than the base frequency, such as for the main shaft of the machine.
- The acceleration/deceleration pattern has the **Pr.3 Base frequency** (**Pr.84 Rated motor frequency** under PM sensorless vector control) (fb) as the point of inflection in an S-pattern curve, and the acceleration/deceleration time can be set to be suitable for the motor torque reduction in the constant-power operation range at the base frequency (fb) or more.

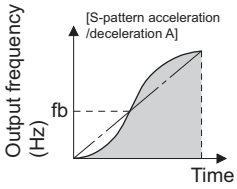

- Acceleration/deceleration time calculation method when the set frequency is equal to or higher than the base frequency

Acceleration time $t = (4/9) \times (T/fb^2) \times f^2 + (5/9) \times T$
Where T is the acceleration/deceleration time (s), f is the set frequency (Hz), and fb is the base frequency (rated motor frequency)

- Reference (0 Hz to set frequency) of acceleration/deceleration time when **Pr.3** = "60 Hz"

Acceleration/deceleration time (s)	Set frequency (Hz)			
	60	120	200	400
5	5	12	27	102
15	15	35	82	305

上正科技有限公司
購買、維修 此手冊零組件
電話： 037-466333
Email: service@repairtw.com
www.repairtw.com

REMARKS

- For the acceleration/deceleration time setting of the S-pattern acceleration/deceleration A, set the time to **Pr.3** (**Pr.84** under PM sensorless vector control) instead of **Pr.20 Acceleration/deceleration reference frequency**.

(3) S-pattern acceleration/deceleration B (Pr.29 = "2")

- This is useful for preventing collapsing stacks such as on a conveyor. S-pattern acceleration/deceleration B can reduce the impact during acceleration/deceleration by accelerating/decelerating while maintaining an S-pattern from the present frequency (f2) to the target frequency (f1).

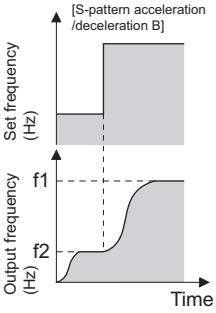

(4) Backlash measures (Pr.29 = "3", Pr.140 to Pr.143)

- Reduction gears have an engagement gap and have a dead zone between forward rotation and reverse rotation. This dead zone is called backlash, and this gap disables a mechanical system from following motor rotation. More specifically, a motor shaft develops excessive torque when the direction of rotation changes or when constant-speed operation shifts to deceleration, resulting in a sudden motor current increase or regenerative status.
- To avoid backlash, acceleration/deceleration is temporarily stopped. Set the acceleration/deceleration stopping frequency and time in **Pr.140 to Pr.143**.

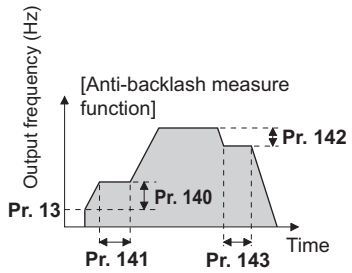

REMARKS

- Setting the backlash measures increases the acceleration/deceleration time by the stopping time.

(5) S-pattern acceleration/deceleration C (Pr.29 = "4", Pr.380 to Pr.383)

- Switch the acceleration/deceleration curve by the S-pattern acceleration/deceleration C switchover (X20) signal.
- To input the X20 signal, set "20" in any of **Pr.178 to Pr.189 (Input terminal function selection)** to assign the function to the terminal.

X20 signal	During acceleration	During deceleration
OFF	**Pr.380 Acceleration S-pattern 1**	**Pr.381 Deceleration S-pattern 1**
ON	**Pr.382 Acceleration S-pattern 2**	**Pr.383 Deceleration S-pattern 2**

上作科技有限公司
購買、維修 此手冊零組件
電話： 037-466333
Email: service@repairtw.com
Line id: @zzzz
www.repairtw.com

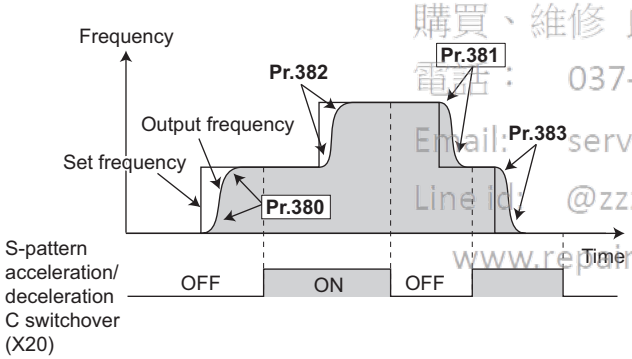

- Set the ratio (%) of time for drawing an S-shape in **Pr.380 to Pr.383** with the acceleration time as 100%.

Parameter setting (%) = Ts / T × 100%

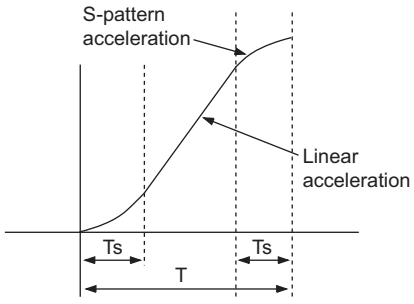

REMARKS

- At a start, the motor starts at **Pr.13 Starting frequency** when the start signal turns ON.
- If there is a difference between the speed command and speed at a start of deceleration due to torque limit operation etc., the speed command is matched with the speed to make deceleration.
- Change the X20 signal after the speed becomes constant.
- S pattern operation before switching continues even if the X20 signal is changed during acceleration or deceleration.
- The X20 signal can be assigned to an input terminal by setting any of **Pr.178 to Pr.189 (input terminal function selection)**. Changing the terminal assignment may affect other functions. Set parameters after confirming the function of each terminal.

(F) Setting of acceleration/deceleration time and acceleration/deceleration pattern

(6) S-pattern acceleration/deceleration D (Pr.29 = "5", Pr.516 to Pr.519)

- Set the time required for S-pattern operation part of S-pattern acceleration/deceleration with **Pr.516 to Pr.519**.
  Set each S-pattern operation time for acceleration start **(Pr.516)**, acceleration completion **(Pr.517)**, deceleration start **(Pr.518)**, and deceleration completion **(Pr.519)**.
- When S-pattern acceleration/deceleration D is set, the acceleration/deceleration time becomes longer, as shown below. The set acceleration/deceleration time T1 indicates the actual time taken for linear acceleration/deceleration as calculated based on **Pr.7, Pr.8, Pr.44, Pr.45, Pr.110,** and **Pr.111**.

Actual acceleration time T2 = set acceleration time T1 + (S-pattern time at start of acceleration + S-pattern time at completion of acceleration) / 2
Actual deceleration time T2 = set deceleration time T1 + (S-pattern time at start of deceleration + S-pattern time at completion of deceleration) / 2

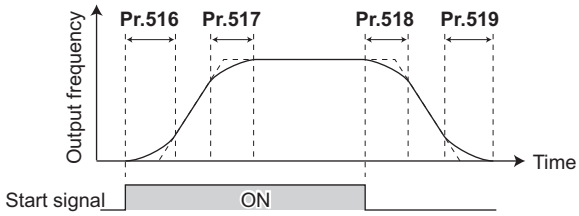

REMARKS

- Even if the start signal is turned OFF during acceleration, the inverter will not decelerate immediately to avoid sudden frequency change. (Likewise, the inverter will not immediately accelerate when deceleration is changed to re-acceleration by turning the start signal ON during deceleration, etc.)

上正科技有限公司
購買・維修 此字加零組件
電話： 037-466333
Email: service@repairtw.com
Line id: @zzzz
www.repairtw.com

- For example, the following table shows the actual acceleration time when starting the inverter by selecting S-pattern acceleration/deceleration D from a stop to 60 Hz, as shown below, with the initial parameter settings.

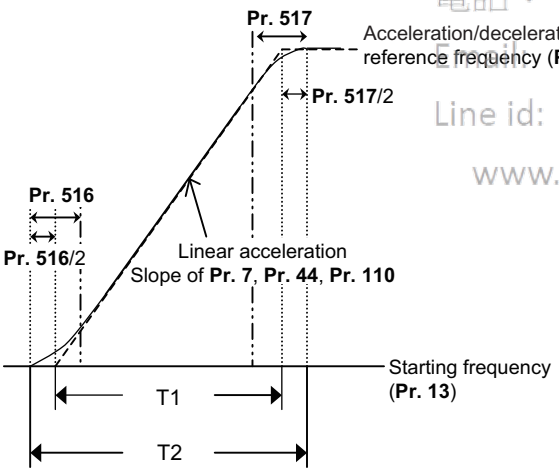

Set acceleration time T1 = (set frequency **- Pr.13**) × **Pr.7** / **Pr.20**
= (60 Hz - 0.5 Hz) × 5 s / 60 Hz
4.96 s (actual acceleration time at linear acceleration)
Actual acceleration time T2 = set acceleration time T1 + (**Pr.516** + **Pr.517**) / 2
= 4.96 s + (0.1 s + 0.1 s) / 2
= 5.06 s (acceleration time at S-pattern acceleration)

- The following table shows the actual deceleration time when stopping the inverter by selecting S-pattern acceleration/deceleration D from operation to 0 Hz, as shown below, with the initial parameter settings.

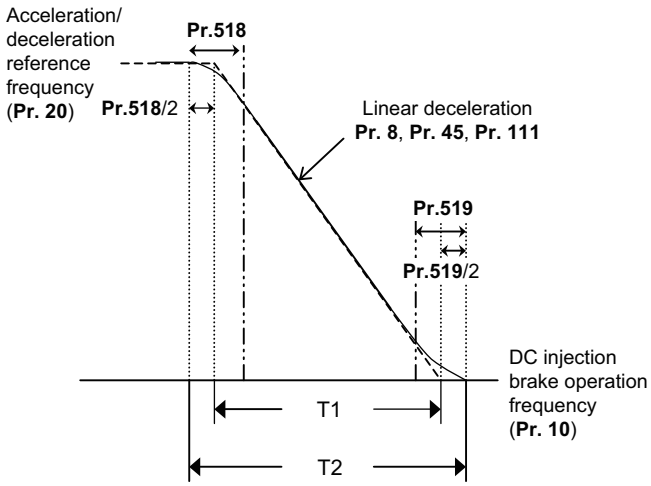

Set deceleration time T1 = (set frequency - **Pr.10 DC injection brake operation frequency**) × **Pr.8** / **Pr.20**
= (60 Hz - 3 Hz) × 5 s / 60 Hz
4.75 s (actual deceleration time at linear deceleration)
Actual deceleration time T2 = set deceleration time T1 + (**Pr.518** + **Pr.519**) / 2
= 4.75 s + (0.1 s + 0.1 s) / 2
= 4.85 s (deceleration time at S-pattern deceleration)

REMARKS

- When acceleration/deceleration time (such as **Pr.7** and **Pr.8**) is set to "0 s" under Real sensorless vector control, vector control, and PM sensorless vector control (with MM-CF and **Pr.788 Low speed range torque characteristic selection** ="9999 (initial value)"), linear acceleration and deceleration are performed for the S-pattern acceleration/deceleration A to D and backlash measures (**Pr.29** ="1 to 5").
- Set linear acceleration/deceleration (**Pr.29** = "0 (initial value)") when torque control is performed under Real sensorless vector control or vector control. When acceleration/deceleration patterns other than the linear acceleration/deceleration are selected, the protective function of the inverter may be activated.

上正科技有限公司
購買、維修 此手冊零組件
電話： 037-466333
Email: service@repairtw.com
Line id: @zzzz
www.repairtw.com

(7) Variable-torque acceleration/deceleration (Pr.290 = "6")

- This function is suitable to accelerate/decelerate a variable torque load such as a fan and blower in a short time. Linear acceleration/deceleration is performed in the area where the output frequency > base frequency.

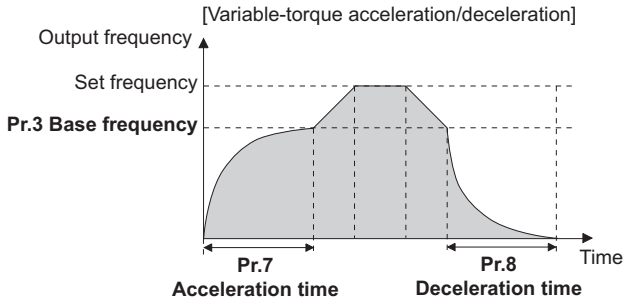

REMARKS

- When the base frequency is out of the range 45 to 65 Hz, the linear acceleration/deceleration is performed even if **Pr.29** = "6".
- Even if **Pr.14 Load pattern selection** = "1 (variable torque load)", variable torque acceleration/deceleration setting is prioritized and the inverter operates as **Pr.14** = "0 (constant torque load)".
- For the variable torque acceleration/deceleration time setting, set the time period to reach **Pr.3 Base frequency**. (Not the time period to reach **Pr.20 Acceleration/deceleration reference frequency**.)
- The variable torque acceleration/deceleration is disabled during PM sensorless vector control. (Linear acceleration/deceleration is performed.)

♦ Parameters referred to ♦

Pr.3 Base frequency ☞ page 578
Pr.7 Acceleration time, Pr.8 Deceleration time, Pr.20 Acceleration/deceleration reference frequency ☞ page 278
Pr.10 DC injection brake operation frequency ☞ page 584
Pr.178 to Pr.182 (input terminal function selection) ☞ page 416

5.8.3 Remote setting function

Even if the operation panel is located away from the enclosure, contact signals can be used to perform continuous variable-speed operation, without using analog signals.
By simply setting this parameter, the acceleration, deceleration and setting clear functions of the remote speed setter (FR-FK) become available.

Pr.	Name	Initial value	Setting range	Description		
				RH, RM, RL signal function	Frequency setting storage function	Deceleration to the frequency lower than the set frequency
59 F101	Restart cushion time	0	0	Multi-speed setting	-	Disabled
			1	Remote setting	With	
			2	Remote setting	Without	
			3	Remote setting	Without (Turning STF/STR OFF clears remotely-set frequency.)	
			11	Remote setting	With	Enabled
			12	Remote setting	Without	
			13	Remote setting	Without (Turning STF/STR OFF clears remotely-set frequency.)	

上正科技有限公司
購買、維修 此手冊零組件
電話： 037-466333
Email: service@repairtw.com
Line id: @zzzz
www.repairtw.com

(1) Remote setting function

- Use **Pr.59** to enable/disable the remote setting function and enable/disable the frequency setting storage function during remote setting.
- When **Pr. 59**≠"0" (remote setting function valid), the functions of the RH, RM and RL signals are changed to acceleration (RH), deceleration (RM) and clear (RL).

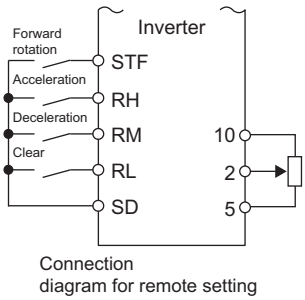

Connection diagram for remote setting

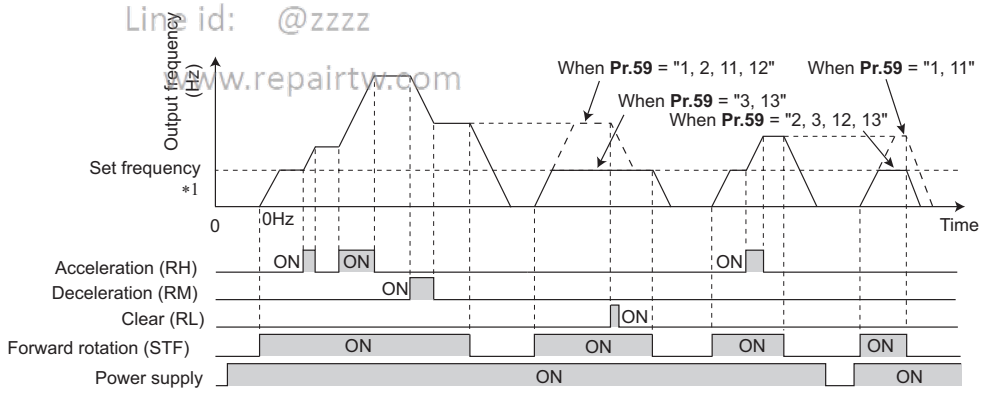

*1 External operation frequency (other than multi-speed) or PU running frequency

(2) Acceleration/deceleration operation

- When the acceleration signal (RH) is turned ON, the set frequency increases. The increased speed at this time is determined by the setting of **Pr.44 Second acceleration/deceleration time**. Turning OFF the RH signal will stop increasing the set frequency and run the motor at the frequency at that time.
- When the deceleration signal (RM) is turned ON, the set frequency decreases. The decreased speed at this time is determined by the setting of **Pr.45 Second deceleration time**. When **Pr.45** = "9999", the deceleration speed is the same as **Pr.44** setting. Turning OFF the RM signal will stop decreasing the set frequency and runs the motor at the frequency at that time.
- When **Pr.59** = any of "11, 12, or 13", deceleration can be performed to a frequency equal to or lower than the main speed (External operation mode frequency except multi-speed or PU operation mode frequency).

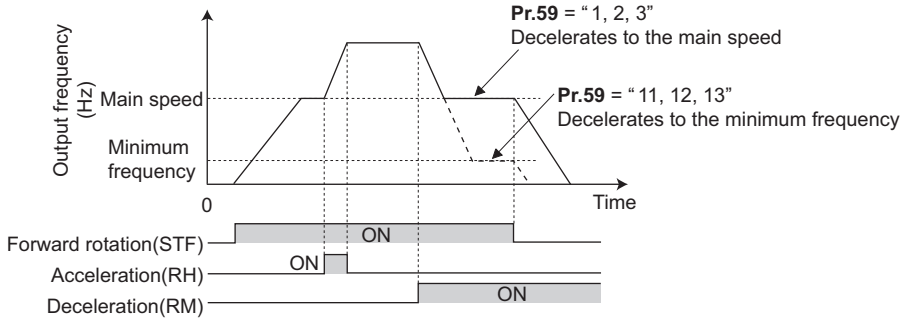

REMARKS

- While the RT signal is OFF, **Pr.44 Second acceleration/deceleration time** and **Pr.45 Second deceleration time** are used as the set frequency accelerating/decelerating time at turn ON of the acceleration/deceleration signal. If the **Pr.7** and **Pr.8** settings are longer, the acceleration/deceleration time set by **Pr.7** and **Pr.8** are applied.
  While the RT signal is ON, **Pr.44** and **Pr.45** settings are used as the acceleration/deceleration time regardless of the **Pr.7** and **Pr.8** settings.

上正科技有限公司
購買、維修 此手冊零組件
電話： 037-466333
Email: service@repairtw.com
Line id: @zzzz
www.repairtw.com

(3) Output frequency

- During External operation, the remotely-set frequency set with RH and RM signals is added to the terminal 4 input and External operation mode frequency (PU operation mode frequency when **Pr.79** = "3" (External and PU combined operation)) except multi-speed setting. (When compensating analog input, set **Pr.28 Multi-speed input compensation selection** = "1". If the RH and RM signals are used for acceleration/deceleration while the frequency is set by analog voltage input (terminal 2 or 4, selected by **Pr.28** = "0"), the auxiliary input via the terminal 1 is disabled.)
- During PU operation, the remotely-set frequency set with RH and RM signal operation is added to the PU running frequency.

(4) Frequency setting storage

- When **Pr.59** = "1, 11", the remotely-set frequency (frequency set by RH/RM operation) is stored to the memory (EEPROM). When power is switched OFF once, then ON, operation is resumed with the stored set frequency.
- When **Pr.59** = "2, 3, 12, 13", the set frequency is not stored, so when switching the power ON again after being switched OFF, the remotely-set frequency becomes 0 Hz.
- The remotely-set frequency is stored at the point when the start signal (STF or STR) turns OFF. Remotely-set frequency is stored every minute after turning OFF (ON) the RH and RM signals together. Each minute, the frequency is overwritten in the EEPROM if the latest frequency is different from the previous one when comparing the two. This cannot be written with RL signals.

REMARKS

- When switching the start signal from ON to OFF, or changing frequency by the RH or RM signal frequently, set the frequency setting value storage function (write to EEPROM) invalid (**Pr.59** = "2, 3, 12, 13"). If the frequency setting value storage function is valid (**Pr.59** = "1, 11"), the frequency is written to EEPROM frequently, and this will shorten the life of the EEPROM.

(5) Clearing the settings

- When **Pr.59** = "1, 2, 11, 12" and the clear signal (RL) is turned ON, the remotely-set frequency is cleared. When **Pr.59** = "3, 13" and the STF (STR) signal is turned OFF, the remotely-set frequency is cleared.

(F) Setting of acceleration/deceleration time and acceleration/deceleration pattern

REMARKS

- The range of frequency changeable by acceleration signal (RH) and deceleration signal (RM) is 0 to maximum frequency (**Pr.1** or **Pr.18** setting). Note that the maximum value of set frequency is (main speed + maximum frequency).

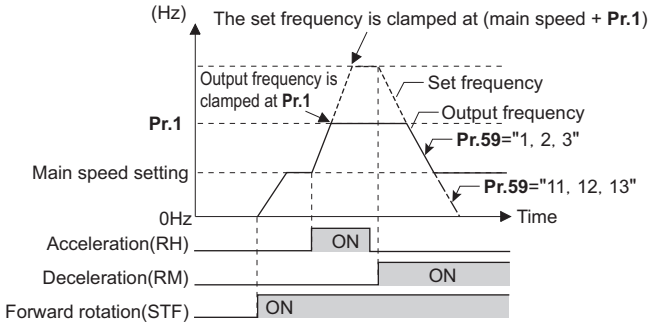

- Even if the start signal (STF or STR) is OFF, turning ON the RH or RM signal varies the preset frequency.
- The RH, RM, or RL signal can be assigned to an input terminal by setting **Pr.178 to Pr.189 (input terminal function selection)**. Changing the terminal assignment may affect other functions. Set parameters after confirming the function of each terminal.
- The inverter can be used in the Network operation mode.
- The remote setting function is invalid during JOG operation and PID control operation.
- The multi-speed operation function is invalid when remote setting function is selected.

Setting frequency is "0".

- Even when the remotely-set frequency is cleared by turning ON the RL (clear) signal after turning OFF (ON) both the RH and RM signals, the inverter operates at the remotely-set frequency stored in the last operation if power is reapplied before one minute has elapsed since turning OFF (ON) both the RH and RM signals.

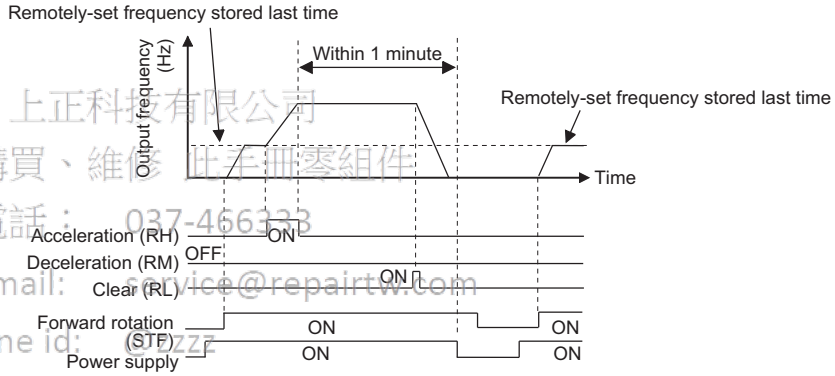

上正科技有限公司
購買、維修 此手冊零組件
電話： 037-466333
Email: service@repairtw.com
Line id: @zzz
www.repairtw.com

- When the remotely-set frequency is cleared by turning ON the RL (clear) signal after turning OFF (ON) both the RH and RM signals, the inverter operates at the frequency in the remotely-set frequency cleared state if power is reapplied before one minute has elapsed since turning OFF (ON) both the RH and RM signals.

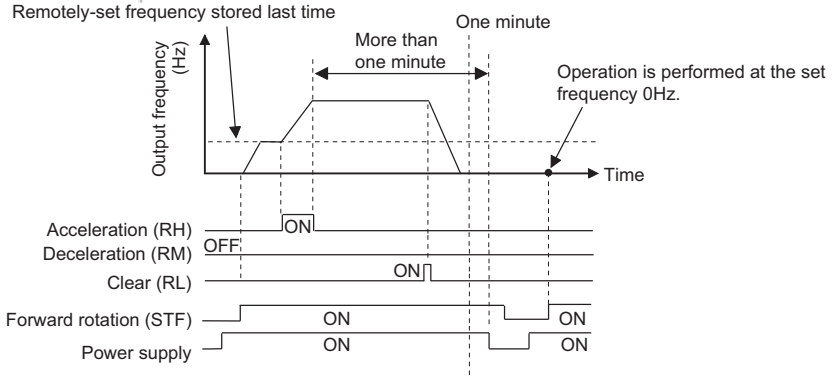

⚠ Caution

⚠ When using the remote setting function, set the maximum frequency again according to the machine.

♦ Parameters referred to ♦

Pr.1 Maximum frequency, Pr.18 High speed maximum frequency ☞ page 334
Pr.7 Acceleration time, Pr.8 Deceleration time, Pr.44 Second acceleration/deceleration time, Pr.45 Second deceleration time ☞ page 278
Pr.28 Multi-speed input compensation selection ☞ page 319
Pr.178 to Pr.182 (input terminal function selection) ☞ page 416

5.8.4 Starting frequency and start-time hold function

V/F Magnetic flux Sensorless Vector

It is possible to set the starting frequency and hold the set starting frequency for a certain period of time.
Set these functions when a starting torque is needed or the motor drive at start needs smoothing.

Pr.	Name	Initial value	Setting range	Description
13 F102	Starting frequency	0.5 Hz	0 to 60 Hz	Set the starting frequency at which the start signal is turned ON.
571 F103	Holding time at a start	9999	0 to 10 s	Set the holding time of **Pr.13**.
			9999	The holding function at a start is invalid.

(1) Starting frequency setting (Pr.13)

- The frequency at start can be set in the range of 0 to 60 Hz.
- Set the starting frequency at which the start signal is turned ON.

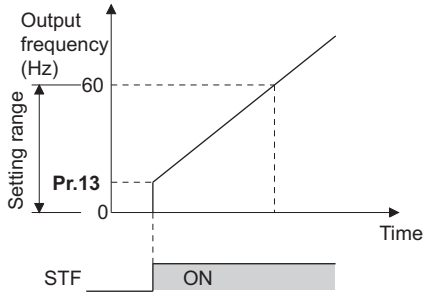

上正科技有限公司
購買、維修 此手冊零組件
電話： 037 466333
Email: service@repairtw.com
www.repairtw.com

REMARKS

- The inverter does not start if the frequency setting signal is less than the value set in **Pr.13**.
  For example, while **Pr.13** = 5 Hz, the inverter output starts when the frequency setting signal reaches 5 Hz.

(2) Start-time hold function (Pr.571)

- This function holds during the period set in **Pr.571** and the output frequency set in **Pr.13 Starting frequency**.
- This function performs initial excitation to smooth the motor drive at a start.

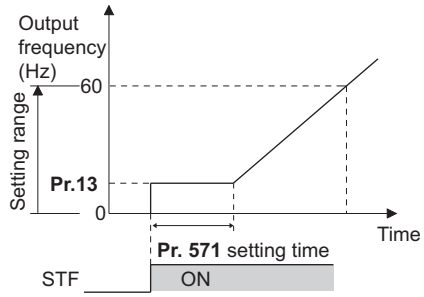

REMARKS

- When **Pr.13** ="0 Hz", the starting frequency is held at 0.01 Hz.
- When the start signal was turned OFF during start-time hold, deceleration is started at that point.
- At switching between forward rotation and reverse rotation, the starting frequency is valid but the start-time hold function is invalid.

⚠ Caution

Note that when Pr.13 is set to any value equal to or lower than Pr.2 Minimum frequency, simply turning ON the start signal will run the motor at the preset frequency even if the command frequency is not input.

♦ Parameters referred to ♦

Pr.2 Minimum frequency ☞ page 334

5.8.5 Minimum motor speed frequency and hold function at the motor start up PM

Set the frequency where the PM motor starts running. Set the deadband in the low-speed range to eliminate noise and offset deviation when setting a frequency with analog input.

Pr.	Name	Initial value	Setting range	Description
13 F102	Starting frequency	Minimum frequency/ Minimum rotations per minute	0 to 60 Hz	Set the frequency where the motor starts running.
571 F103	Holding time at a start	9999	0 to 10 s	Set the time to hold 0.01 Hz.
			9999	The holding function at start is disabled.

(1) Starting frequency setting (Pr.13)

- The frequency where the PM motor starts running can be set in the range of 0 to 60 Hz.
- While the frequency command is less than the **Pr.13 Starting frequency** setting, the PM motor is stopped. When the frequency command reaches the set frequency or higher, the PM motor accelerates according to the **Pr.7 Acceleration time** setting.

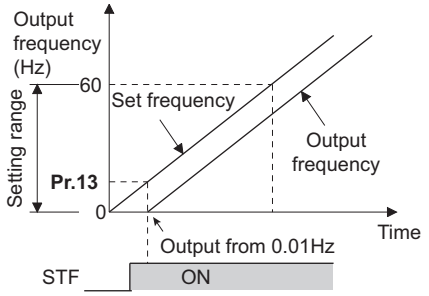

上正科技有限公司
購買、維修 此手冊零組件
電話： 037-466333
Email: service@repairtw.com
Line Id: @zzzz
www.repairtw.com

REMARKS

- Under induction motor control (under V/F control, Advanced magnetic flux vector control, Real sensorless vector control, and vector control), the output starts at the frequency set in **Pr.13**. Under PM sensorless vector control, the output always starts at 0.01 Hz.
- The inverter output does not start when the frequency-setting signal is less than **Pr.13**. For example, while **Pr.13** = "20 Hz", the inverter output starts when the frequency setting signal reaches 20 Hz.

(2) Start-time hold function (Pr.571)

- This function holds 0.01 Hz during the period set in **Pr.571**.
- **Pr.571** is active when the low-speed range high-torque characteristic is enabled (**Pr.788**="9999").

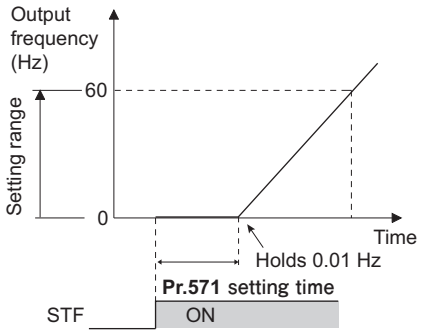

⚠ Caution

⚠ Note that when Pr.13 is set to any value equal to or lower than Pr.2 Minimum frequency, simply turning ON the start signal will run the motor at the preset frequency even if the command frequency is not input.

♦ Parameters referred to ♦

Pr.2 Minimum frequency ☞ page 334
Pr.7 Acceleration time ☞ page 278

5.8.6 Shortest acceleration/deceleration and optimum acceleration/deceleration (automatic acceleration/deceleration) V/F Magnetic flux Sensorless Vector

The inverter can be operated with the same conditions as when the appropriate value is set to each parameter even when acceleration/deceleration time and V/F pattern are not set. This function is useful for operating the inverter without setting detailed parameters.

Pr.	Name	Initial value	Setting range	Description
292 F500	Automatic acceleration/ deceleration	0	0	Normal operation
			1	Shortest acceleration/deceleration (without brakes)
			11	Shortest acceleration/deceleration (with brakes)
			3	Optimum acceleration/deceleration
			5, 6	List operation 1, 2 (Refer to page 296.)
			7, 8	Brake sequence 1, 2 (Refer to page 457.)
61 F510	Reference current	9999	0 to 500 A*1	Set the reference current during shortest (optimum) acceleration/deceleration.
			0 to 3600 A*2	
			9999	Rated output current value reference of the inverter
62 F511	Reference value at acceleration	9999	0 to 220%	Set the speed limit value (optimum value) during shortest (optimum) acceleration.
			9999	Shortest acceleration/deceleration: 150% as the limit value Optimum acceleration/deceleration: 100% as the optimum value
63 F512	Reference value at deceleration	9999	0 to 220%	Set the speed limit value (optimum value) during shortest (optimum) deceleration.
			9999	Shortest acceleration/deceleration: 150% as the limit value Optimum acceleration/deceleration: 100% as the optimum value
293 F513	Acceleration/deceleration separate selection	0	0	Shortest (optimum) acceleration/deceleration for both acceleration and deceleration
			1	Shortest (optimum) acceleration/deceleration for acceleration only
			2	Shortest (optimum) acceleration/deceleration for deceleration only

上正科技有限公司
購買、維修 此手冊零組件
電話： 037-466333
Email: service@repairtw.com
Line id: @zzzz
www.repairtw.com

*1 The setting range for the FR-A820-03160(55K) or lower and FR-A840-01800(55K) or lower.

*2 The setting range for the FR-A820-03800(75K) or higher and FR-A840-02160(75K) or higher.

(1) Shortest acceleration/deceleration (Pr.292 = "1, 11", Pr.293)

- Set this parameter to accelerate/decelerate the motor at the shortest time. This function is useful when the motor needs to be accelerated/decelerated at a shorter time, such as for a machine, but the designed value of the machine constant is not known.
- This function adjusts the acceleration/deceleration time to accelerate/decelerate the motor with the maximum torque that can be output with the inverter. **Pr.7 Acceleration time** and **Pr.8 Deceleration time** settings are used as reference, and their settings are not changed.
- Use **Pr.293 Acceleration/deceleration separate selection** to apply the shortest acceleration/deceleration to one of acceleration and deceleration only.
  When "0 (initial value)" is set, the shortest acceleration/deceleration is performed for both acceleration and deceleration.
- Since the FR-A820-00490(7.5K) or lower, FR-A840-00250(7.5K) or lower capacity inverters are equipped with built-in brake resistors, set **Pr.292** to "11". Set "11" also when a high-duty brake resistor or brake unit is connected. The deceleration time can further be shortened.
- When the shortest acceleration/deceleration is selected under V/F control and Advanced magnetic flux vector control, the stall prevention operation level during acceleration/deceleration becomes 150% (adjustable using **Pr.61 to Pr.63**). The setting of **Pr.22 Stall prevention operation level** and stall level by analog input are used only during a constant speed operation.
  Under Real sensorless vector control and vector control, the torque limit level (**Pr.22**, etc.) is applied during acceleration/deceleration. The adjustments by **Pr.61** to **Pr.63** are disabled.

(F) Setting of acceleration/deceleration time and acceleration/deceleration pattern

- It is inappropriate to use for the following applications.
  -Machines with large inertia (10 times or more), such as a fan. Since stall prevention operation will be activated for a long time, this type of machine may trip due to motor overloading, etc.
  -When the inverter is always operated at a specified acceleration/deceleration time.

REMARKS

- Even if automatic acceleration/deceleration has been selected, inputting the JOG signal (JOG operation), RT signal (second function selection) or X9 signal (third function selection) during an inverter stop will switch to the normal operation and give priority to JOG operation, second function selection or third function selection. Note that during operation, an input of JOG and RT signal does not have any influence even when the automatic acceleration/deceleration is enabled.
- Since the shortest acceleration/deceleration is made with the stall prevention operation being activated, the acceleration/deceleration speed always varies according to the load conditions.
- By setting **Pr.7** and **Pr.8** appropriately, it is possible to accelerate/decelerate with a shorter time than when selecting the shortest acceleration/deceleration.

(2) Optimum acceleration/deceleration (Pr.292 = "3", Pr.293)

- The inverter operates at the most efficient level within the rated range that can be used continuously with reasonable inverter capacity.
  Using self-learning, the average current during acceleration/deceleration is automatically set so as to become the rated current.
  This is ideal for applications operated with a predetermined pattern and minimal load fluctuations, such as by an automatically operated conveyor.
- When the optimum acceleration/deceleration is selected, at first, the operation is performed with the values set in **Pr.0 Torque boost**, **Pr.7 Acceleration time**, and **Pr.8 Deceleration time**. After the first operation is completed, average and peak currents are calculated based on the motor current during acceleration/deceleration, and the obtained values are compared with the reference current (initially set to the rated inverter current) to adjust the **Pr.0**, **Pr.7**, and **Pr.8** settings to their optimal values.
  The operation is the performed with the updated **Pr.0**, **Pr.7**, and **Pr.8** values onwards, and those parameters settings are adjusted each time.
  Under Advanced magnetic flux vector control, Real sensorless vector control and vector control, however, the **Pr.0** setting is not changed.
- When a Regenerative overvoltage trip during deceleration or stop (E.OV3) occurs during deceleration, the setting of **Pr.8** is multiplied by 1.4.
- Parameter storage
  The optimum values of **Pr.0, Pr.7 and Pr.8** are written to both the parameter RAM and EEPROM only three times of acceleration (deceleration) after the optimum acceleration/deceleration has been selected or after the power is switched ON or the inverter is reset. At or after the fourth attempt, they are not stored into EEPROM. Hence, after power-ON or inverter reset, the values changed at the third time are valid. However, the optimum values are calculated even for the fourth time and later, and **Pr.0, Pr.7, and Pr.8** are set to the RAM; therefore, these can be stored to the EEPROM by reading and writing the settings with the operation panel (FR-DU08).

Number of optimum value changes	Pr.0, Pr.7, Pr.8		Operating condition
	EEPROM value	RAM value	
1 to 3 times	Updated	Updated	Updated
4 and more times	Unchanged from the 3rd value	Updated	Updated

- Either acceleration or deceleration can be made in the optimum acceleration/deceleration using **Pr.293 Acceleration/deceleration separate selection**. When the setting value is "0" (initial value), both acceleration and deceleration are made in the optimum acceleration/deceleration.
- It is inappropriate for machines which change in load and operation conditions.
  Optimum values are saved for the next operation. If the operating condition changes before the next operation, a fault such as overcurrent trip or a lack of acceleration/deceleration may occur.

上正科技有限公司
購買、維修 此手冊零組件
電話： 037-466333
Email: service@repairtw.com
Line id: @zzzz
www.repairtw.com

REMARKS

- Even if the optimum acceleration/deceleration has been selected, inputting the JOG signal (Jog operation), RT signal (second function selection) or X9 signal (third function selection) during an inverter stop will switch to the normal operation and give priority to JOG operation, second function selection or third function selection. Note that during operation, an input of JOG and RT signal does not have any influence even when the optimum acceleration/deceleration is enabled.
- Because of the learning method, the impact of the optimum acceleration/deceleration is not apparent in the first operation after setting to the optimum acceleration/deceleration mode.
- The optimum value are calculated for only acceleration from 0 to 30 Hz or higher or deceleration from 30 Hz or higher to 0 Hz.
- The optimum acceleration/deceleration will not operate if the motor was not connected or the output current is less than 5% of the rated current of the inverter.
- A Regenerative overvoltage trip during deceleration or stop (E.OV3) may occur during deceleration even if the optimum acceleration/deceleration is selected with **Pr.293** ="1 (optimum acceleration/deceleration during acceleration only)" setting. In such case, set **Pr.8** setting longer.

(3) Shortest and optimum acceleration/deceleration adjustment (Pr.61 to Pr.63)

- The application range can be expanded by setting the parameters for adjustment of **Pr.61** to **Pr.63**.

Pr.	Name	Setting range	Description
61	Reference current	0 to 500 A*1	Set the rated motor current value such as when the motor capacity and inverter capacity differ. Shortest acceleration/deceleration: Set the reference current (A) of the stall prevention operation level during acceleration/deceleration. Optimum acceleration/deceleration: Set the reference current (A) of the optimum current during acceleration/deceleration.
		0 to 3600 A*2	
		9999 (initial value)	The rated inverter current value is the reference.
62	Reference value at acceleration Reference value at deceleration	0 to 400%	Set this when changing the reference level of acceleration and deceleration. Shortest acceleration/deceleration: Set the stall prevention operation level (percentage of current value of **Pr.61**) during acceleration/deceleration. Optimum acceleration/deceleration: Set the optimum current level (percentage of current value of **Pr.61**) during acceleration/deceleration.
63		9999 (initial value)	Shortest acceleration/deceleration: Stall prevention operation level is 150% for the shortest acceleration/deceleration. Optimum acceleration/deceleration: 100% as the optimum value.

*1 The setting range for the FR-A820-03160(55K) or lower and FR-A840-01800(55K) or lower.

*2 The setting range for the FR-A820-03800(75K) or higher and FR-A840-02160(75K) or higher.

REMARKS

- When Real sensorless vector control or vector control is selected with the shortest acceleration/deceleration, **Pr.61 to Pr.63** are invalid.
- Even if **Pr.61 to Pr.63** are set once, changing the setting to other than the shortest acceleration/deceleration (**Pr.292**≠"1 or 11") automatically resets to the initial setting (9999). Set **Pr.61 to Pr.63** after setting **Pr.292**.

♦ Parameters referred to ♦

Pr.0 Torque boost ☞page 577

Pr.7 Acceleration time, Pr.8 Deceleration time ☞page 278

Pr.22 Stall prevention operation level ☞page 336

Pr.22 Torque limit level ☞page 181

上亞科技有限公司 購買、維修此手冊零組件 電話：037-466333 Email: ... Line id: @zzzz www.ecadtw.com

5.8.7 Lift operation (automatic acceleration/deceleration) V/F

The inverter can be operated according to the load pattern of the lift with counterweight.

Pr.	Name	Initial value	Setting range	Description	
292 F500	Automatic acceleration/ deceleration	0	0	Normal operation	
			1	Shortest acceleration/deceleration (without brakes)	(Refer to page 293.)
			11	Shortest acceleration/deceleration (with brakes)	
			3	Optimum acceleration/deceleration	
			5	Lift operation 1 (stall prevention operation level 150%)	
			6	Lift operation 2 (stall prevention operation level 180%)	
			7, 8	Brake sequence 1, 2 (Refer to page 457.)	
61 F510	Reference current	9999	0 to 500 A*1	Set the reference current during shortest (optimum) acceleration/deceleration.	
			0 to 3600 A*2		
			9999	Rated output current value reference of the inverter	
64 F520	Starting frequency for elevator mode	9999	0 to 10 Hz	Set the starting frequency for the lift operation.	
			9999	Starting frequency is 2 Hz.	

*1 The setting range for the FR-A820-03160(55K) or lower and FR-A840-01800(55K) or lower.

*2 The setting range for the FR-A820-03800(75K) or higher and FR-A840-02160(75K) or higher.

上正科技有限公司
購買、維修 此手冊零組件
電話： 037-466333
Email: service@repairtw.com
www.repairtw.com

(1) Lift operation (Pr.292 = "5, 6")

- When **Pr.292 Automatic acceleration/deceleration** is set to "5" or "6", the lift operation is selected, and each setting is changed, as shown in the table below.
- During power driving, sufficient torque is generated, and during regenerative driving and during driving with no load, the torque boost setting is adjusted automatically so as not to activate the overcurrent protective function by overexcitation.

Name	Normal operation	Multi-rating (Pr.570)	Lift operation (Pr.292)	
			5	6
Torque boost	**Pr.0** (6/4/3/2/1%)		Changes according to the output current (as shown below)	
Starting frequency	**Pr.13** (0.5 Hz)		**Pr.64** (2 Hz) Accelerate after 100 ms hold.	
Base frequency voltage	**Pr.19** (9999)		220 V class (440 V class)	
Stall prevention operation level	**Pr.22** (150%), etc.	0(SLD)	110%	115%
		1(LD)	120%	140%
		2(ND) Initial value	150%	180%
		3(HD)	200%	230%

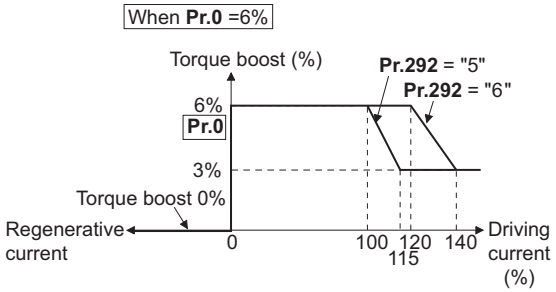

- If the lift has a load in which the rated current of the inverter is exceeded, the maximum torque may be insufficient. For a lift without counterweight, setting **Pr.14 Load pattern selection** to "2 or 3" (for lift load) and setting **Pr.19 Base frequency voltage** appropriately give the maximum torque a greater advantage than when selecting the lift operation.

REMARKS

- The stall prevention operation level is automatically lowered according to the cumulative value of the electronic thermal O/L relay so as to prevent an inverter overload trip (E.THT, E.THM) from occurring.

(2) Lift operation adjustment (Pr.61, Pr.64)

- The application range can be expanded by setting the parameters for adjustment of **Pr.61 and Pr.64**.

Pr.	Name	Setting range	Description
61	Reference current	0 to 500 A*1	Set the rated motor current value when the motor capacity and inverter capacity differ, etc. Set the reference current (A) of the stall prevention operation level.
		0 to 3600 A*2	
		9999 (initial value)	The rated inverter output current value is the reference.
64	Starting frequency for elevator mode	0 to 10 Hz	Set the starting frequency for the lift operation.
		9999 (initial value)	Starting frequency is 2 Hz.

*1 The setting range for the FR-A820-03160(55K) or lower and FR-A840-01800(55K) or lower.

*2 The setting range for the FR-A820-03800(75K) or higher and FR-A840-02160(75K) or higher.

REMARKS

- Even if the lift operation has been selected, inputting the JOG signal (Jog operation), RT signal (second function selection) or X9 signal (third function selection) during an inverter stop will disable the automatic acceleration/deceleration and give priority to JOG operation, second function selection or third function selection. Note that during operation, an input of JOG and RT signal does not have any influence even when the automatic acceleration/deceleration is enabled.
- Even if **Pr.61** and **Pr.64** are set, changing **Pr.292** automatically resets to the initial setting (9999). Set **Pr.61** and **Pr.64** after setting **Pr.292**.

♦ Parameters referred to ♦

Pr.0 Torque boost ☞ page 577
Pr.13 Starting frequency ☞ page 291
Pr.14 Load pattern selection ☞ page 580
Pr.19 Base frequency voltage ☞ page 578
Pr.2 Stall prevention operation level ☞ page 336
Pr.570 Multiple rating setting ☞ page 258

上正科技有限公司
購買、維修 此手冊零組件
電話： 037-466333
Email: service@repairtw.com
Line id: @zzzz
www.repairtw.com

5.9 (D) Operation command and frequency command

Purpose	Parameter to set			Refer to page
To select the operation mode	Operation mode selection	P.D000	Pr.79	299
To start up in Network operation mode at power-ON	Communication startup mode selection	P.D000, P.D001	Pr.79, Pr.340	307
To select the command source during communication operation	Operation and speed command sources during communication operation, command source selection	P.D010 to P.D013	Pr.338, Pr.339, Pr.550, Pr.551	308
To prevent motor from rotating reversely	Reverse rotation prevention selection	P.D020	Pr.78	314
To change the setting resolution of speed	Set resolution switchover	P.D030	Pr.811	344
To change the setting resolution of the torque limit	Set resolution switchover	P.D030	Pr.811	344
To set the frequency by pulse train input	Pulse train input	P.D100, P.D101, P.D110, P.D111	Pr.291, Pr.384 to Pr.386	315
To perform JOG operation	JOG operation	P.D200, P.F002	Pr.15, Pr.16	318
To control frequency with combinations of terminals	Multi-speed operation	P.D300 to P.D315	Pr.28, Pr.4 to Pr.6, Pr.24 to Pr.27, Pr.232 to Pr.239	319
To select torque command method during torque control	Torque command source selection	P.D400 to P.D402	Pr.804 to Pr.806	211

上正科技有限公司
購買、維修 此手冊零組件
電話： 037-466330
Email: service@repairtw.com
Line id: @zzzz
www.repairtw.com

5.9.1 Operation mode selection

Select the operation mode of the inverter.
The mode can be changed among operations using external signals (External operation), operation by operation panel (FR-DU08) or parameter unit (FR-PU07) (PU operation), combined operation of PU operation and External operation (External/PU combined operation), and Network operation (when RS-485 terminals or communication option is used).

Pr.	Name	Initial value	Setting range	Description
79 D000	Operation mode selection	0	0 to 4, 6, 7	Selects the operation mode.

The following table lists valid and invalid commands in each operation mode.

Pr.79 setting	Description			LED display :OFF :ON	Refer to page
0 (initial value)	Use the External/PU switchover mode (PU/EXT) to switch between the PU and External operation mode. At power ON, the inverter is in the External operation mode.			PU operation mode PU EXT NET External operation mode PU EXT NET NET operation mode PU EXT NET	302
1	Operation mode	Frequency command	Start command	PU operation mode PU EXT NET	303
	PU operation mode fixed	Operation panel (FR-DU08) and PU (FR-PU04/FR-PU07).	FWD or REV on PU (FR-DU08/FR-PU07)		
2	External operation mode fixed. The operation can be performed by switching between the External and NET operation modes.	External signal input (terminal 2 and 4, JOG, multi-speed selection, etc.)	External signal input (terminal STF, STR)	External operation mode PU EXT NET NET operation mode PU EXT NET	302
3	External/PU combined operation mode 1	PU (FR-DU08/FR-PU07) or external signal input (multi-speed setting, terminal 4) *1	External signal input (terminal STF, STR)	External/PU combined operation mode PU EXT NET	303
4	External/PU combined operation mode 2	External signal input (terminal 2 and 4, JOG, multi-speed selection, etc.)	FWD or REV on PU (FR-DU08/FR-PU07)		303
6	Switchover mode Switching of PU, External, and NET operation modes can be performed during operation.			PU operation mode PU EXT NET	304
7	External operation mode (PU operation interlock) X12 signal ON: Switchover to PU operation mode enabled (during External operation, output shutoff) X12 signal OFF: Switchover to PU operation mode disabled			External operation mode PU EXT NET NET operation mode PU EXT NET	304

*1 The priority of frequency commands when **Pr.79** = "3" is "multi-speed operation (RL/RM/RH/REX) > PID control (X14) > terminal 4 analog input (AU) > digital input by operation panel".

上正科技有限公司
購買・維修 此手冊零組件
電話： 037-466333
Email: service@repairtw.com
Line id: @zzzz
www.repairtw.com

(D) Operation command and frequency command

(1) Operation mode basics

- The operation mode specifies the source of the start command and the frequency command for the inverter.
- Basically, there are following operation modes.
  External operation mode: For inputting a start command and a frequency command with an external potentiometer and switches which are connected to the control circuit terminal.
  PU operation mode: For inputting a start command and a frequency command with the operation panel (FR-DU08), parameter unit (FR-PU07), or the RS-485 communication via PU connector.
  Network operation mode (NET operation mode): For inputting a start command and a frequency command using the RS-485 terminals or communication option.
- The operation mode can be selected from the operation panel or with the communication instruction code.

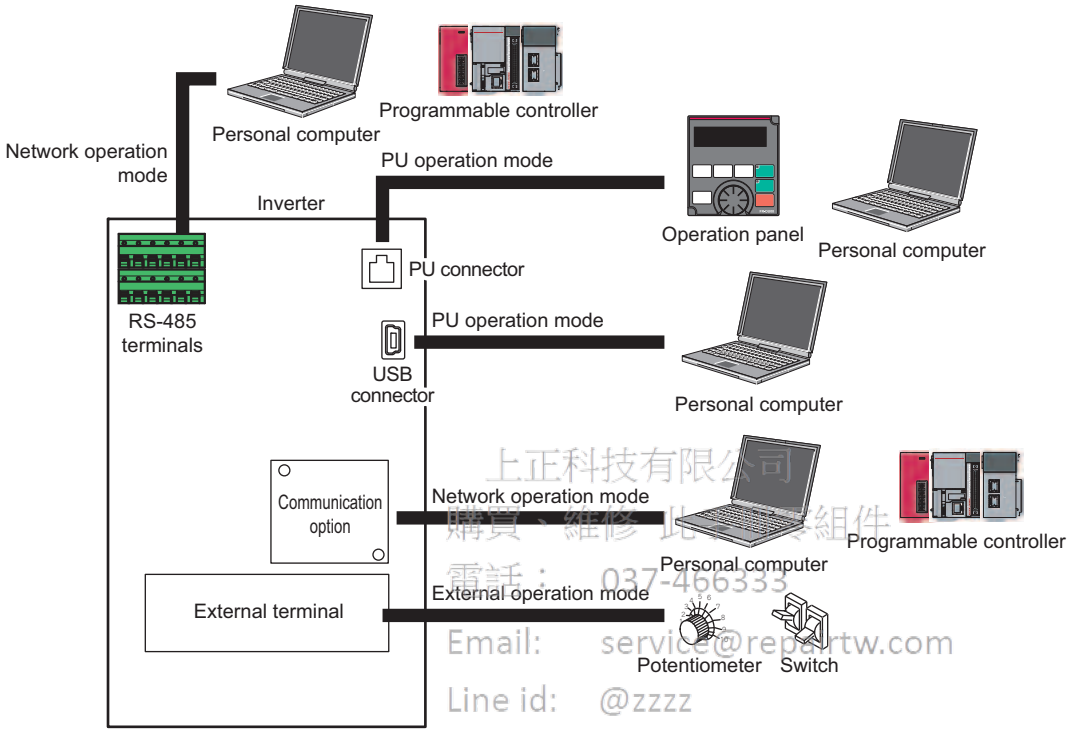

上正科技有限公司
購買、維修 此零組件
電話： 037-466333
Email: service@repairtw.com
Line id: @zzzz
www.repairtw.com

REMARKS

- There are two settings of "3" and "4" with PU/External combined operation. The startup method differs according to the setting value.
- In the initial setting, the stop function (PU stop selection) by PU (FR-DU08/FR-PU07) STOP RESET is effective in modes other than the PU operation mode. (Refer to **Pr.75 Reset selection/disconnected PU detection/PU stop selectionon** page 252.)

(2) Operation mode switching method

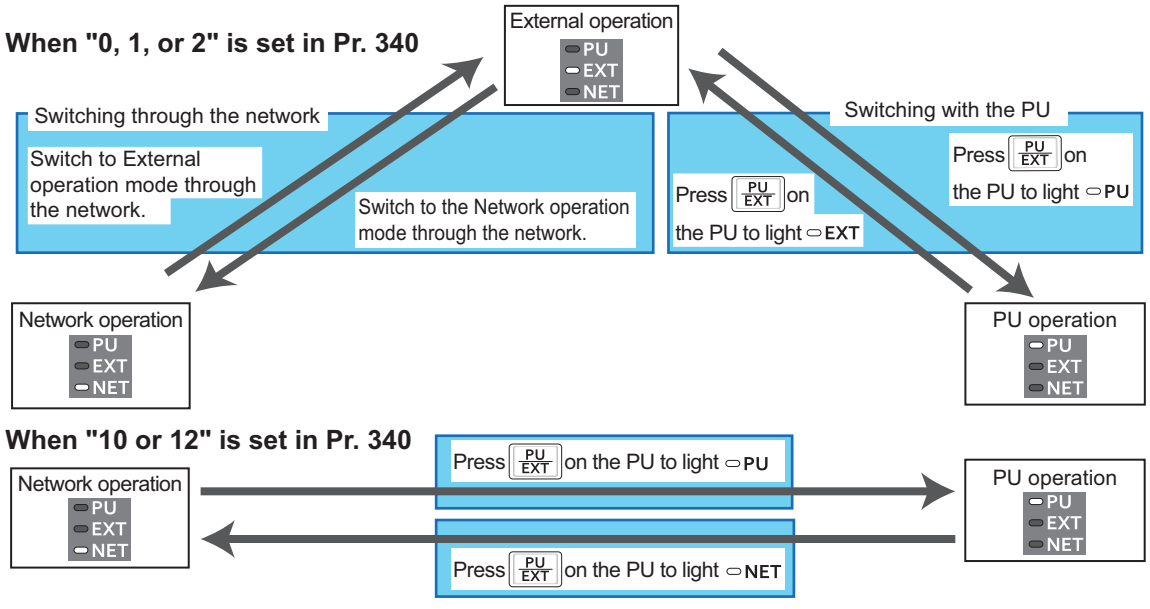

REMARKS

- For details on switching by external terminals, refer to the following pages.

PU operation external interlock signal (X12) ☞ page 304

PU-External operation switchover signal (X16) ☞ page 305

External-NET operation switchover signal (X65), NET-PU operation switchover signal (X66) ☞ page 306

Pr.340 Communication startup mode selection ☞ page 307

(3) Operation mode selection flow

Referring to the following table, select the basic parameter settings or terminal wiring related to the operation mode.

Start command input method	Frequency setting method	Terminal wiring	Parameter setting	Operation method
External signal input (terminal STF, STR)	External (terminal 2 and 4, JOG, multi-speed, etc.)	STF (forward rotation)/STR (reverse rotation) (Refer to page 422.) Terminal 2 and 4 (analog) RL, RM, RH, JOG, etc.	**Pr.79** = "2" (External operation mode fixed)	• Frequency setting Frequency setting terminal ON • Start command STF(STR)-ON
	PU (digital setting)	STF (forward rotation)/STR (reverse rotation) (Refer to page 422.)	**Pr.79** = "3" (External/PU combined operation 1)	• Frequency setting DU digital setting • Start command STF(STR)-ON
	Communication (RS-485 terminals)	STF (forward rotation)/STR (reverse rotation) (Refer to page 422.) RS-485 terminals (Refer to page 538.)	**Pr.338** = "1" **Pr.340** = "1, 2"	• Frequency setting Transmit a frequency command via communication. • Start command STF(STR)-ON
	Communication (communication option)	Terminals for communication option (Refer to the Instruction Manual of the communication option.)	**Pr.338** = "1" **Pr.340** = "1"	• Frequency setting Transmit a frequency command via communication. • Start command STF(STR)-ON
PU (FWD/REV key)	External (terminal 2 and 4, JOG, multi-speed, etc.)	Terminal 2 and 4 (analog) RL, RM, RH, JOG, etc.	**Pr.79** = "4" (External/PU combined operation 2)	• Frequency setting Frequency setting terminal ON • Start command FWD/REV key ON
	PU (digital setting)	—	**Pr.79** = "1" (PU operation mode fixed)	• Frequency setting Digital setting • Start command FWD/REV key ON
	Communication (RS-485 terminals/ communication option)	N/A		
Communication (RS-485 terminals)	External (terminal 2 and 4, JOG, multi-speed, etc.)	RS-485 terminals (Refer to page 538.) Terminal 2 and 4 (analog) RL, RM, RH, JOG, etc.	**Pr.339** = "1" **Pr.340** = "1, 2"	• Frequency setting Frequency setting terminal ON • Start command Transmit a start command via communication
	PU (digital setting)	N/A		
	Communication RS-485 terminals	RS-485 terminals (Refer to page 538.)	**Pr.340** = "1, 2"	• Frequency setting Transmit a frequency command via communication. • Start command Transmit a start command via communication

上正科技有限公司
購買、維修 此手冊零組件
電話： 037-466333
Email: service@repairtw.com
Line id: @zzzz
www.repairtw.com

(D) Operation command and frequency command

Start command input method	Frequency setting method	Terminal wiring	Parameter setting	Operation method
Communication (Communication option)	External (terminal 2 and 4, JOG, multi-speed, etc.)	Terminals for communication option (Refer to the Instruction Manual of the communication option.) Terminal 2 and 4 (analog) RL, RM, RH, JOG, etc.	**Pr.339** = "1" **Pr.340** = "1"	• Frequency setting Frequency setting terminal ON • Start command Transmit a start command via communication
	PU (digital setting)	N/A		
	Communication (communication option)	Terminals for communication option (Refer to the Instruction Manual of the communication option.)	**Pr.340** = "1"	• Frequency setting Transmit a frequency command via communication. • Start command Transmit a start command via communication

(4) External operation mode (Pr.79 = "0" (initial value), "2")

- Select the External operation mode when the start command and the frequency command are applied from a frequency setting potentiometer, start switch, etc. which are provided externally and connected to the control circuit terminals of the inverter.
- Generally, parameter change cannot be performed in the External operation mode. (Some parameters can be changed. Refer to **Pr.77 Parameter write selection** page 260.)
- When **Pr.79** = "0 or 2", the inverter starts up in the External operation mode at power-ON. (When using the Network operation mode, refer to page 307.)
- When parameter changing is seldom necessary, setting "2" fixes the operation mode to the External operation mode. When frequent parameter changing is necessary, setting "0" (initial value) allows the operation mode to be changed easily to the PU operation mode by pressing PU/EXT of the operation panel. After switching to the PU operation mode, always return to the External operation mode.
- The STF and STR signal are used as a start command, and the voltage to terminal 2 and 4, current signal, multi-speed signal, and JOG signal are used as a frequency command.

上正科技有限公司
購買、維修此手冊零組件
電話：037-406333
Email: service@repairtw.com
Line Id: @zzzz
www.repairtw.com

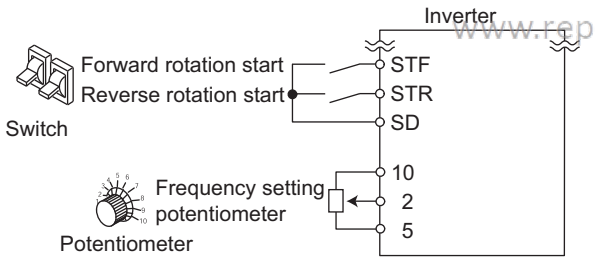

(5) PU operation mode (Pr.79 = "1")

- Select the PU operation mode when applying start and frequency commands by only the key operation of the operation panel (FR-DU08) and parameter unit (FR-PU07). Also select the PU operation mode when making communication using the PU connector.
- When **Pr.79** ="1", the inverter starts up in the PU operation mode at power-ON. The mode cannot be changed to other operation modes.
- The setting dial of the operation panel can be used for setting like a potentiometer. (**Pr.161 Frequency setting/key lock operation selection** page 256)
- When the PU operation mode is selected, the PU operation mode signal (PU) can be output.
  For the terminal used for the PU signal, set "10 (positive logic)" or "110 (negative logic)" in any of **Pr.190 to Pr.196 (output terminal function selection)** to assign the function.

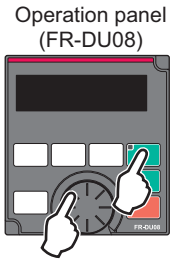

(6) PU/External combined operation mode 1 (Pr.79 = "3")

- Select the PU/External combined operation mode 1 when applying a frequency command from the operation panel (FR-DU08) or parameter unit (FR-PU07) and inputting a start command with the external start switches.
- Set "3" in **Pr.79**. The mode cannot be changed to other operation modes.
- When a frequency is input from the external signal by multi-speed setting, it has a higher priority than the frequency command from the PU. Also, when AU is set to "ON", the command signal is output to the terminal 4.

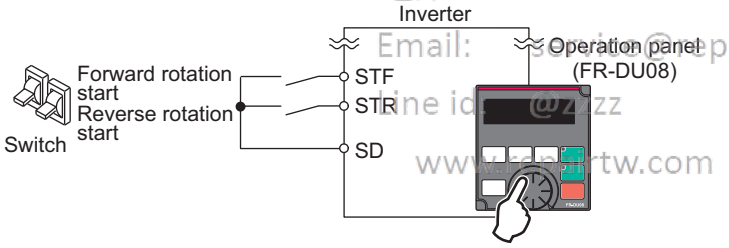

(7) PU/External combined operation mode 2 (Pr.79 = "4")

- Select the PU/External combined operation mode 2 when applying a frequency command from the external potentiometer, or multi-speed and JOG signals, and inputting a start command by key operation of the operation panel (FR-DU08) or parameter unit (FR-PU07).
- Set "4" in **Pr.79**. The mode cannot be changed to other operation modes.

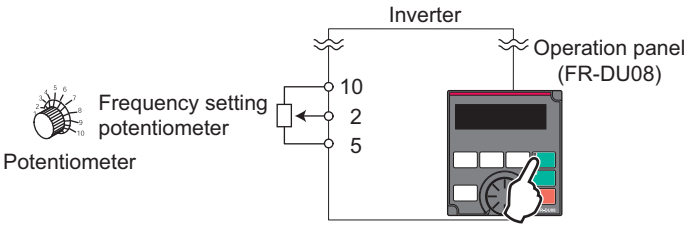

(D) Operation command and frequency command

(8) Switchover mode (Pr.79 = "6")

- PU, External and Network operation (when RS-485 terminals or communication option is used) can be switched among during operation.

Operation mode switchover	Operation switchover/Operating status
External operation→PU operation	Set to the PU operation mode on the operation panel and parameter unit. • As the direction of rotation, the direction that was active by External operation is continued. • For the setting frequency, the setting of the potentiometer (frequency command) is continued. (Note, however, that the setting disappears when the power is turned OFF or when the inverter is reset.)
External operation→NET operation	The switchover command to the Network operation mode is transmitted via communication. • As the direction of rotation, the direction that was active by External operation is continued. • The setting by the setting potentiometer (frequency command) is kept. (Note, however, that the setting disappears when the power is turned OFF or when the inverter is reset.)
PU operation→External operation	Press the External operation key on the operation panel and parameter unit. • The direction of operation is determined by the External operation input signal. • The setting frequency is determined by the external frequency command signal.
PU operation→NET operation	The switchover command to the Network operation mode is transmitted via communication. • For the direction of operation and setting frequency, the status during PU operation is continued.
NET operation→External operation	The switchover command to the External operation mode is transmitted via communication. • The direction of operation is determined by the External operation input signal. • The setting frequency is determined by the external frequency command signal.
NET operation→PU operation	Switch to the PU operation mode on the operation panel and parameter unit. • For the direction of operation and frequency, the status during Network operation is continued.

(9) PU operation interlock (Pr.79 = "7")

- The operation mode can be forcibly switched to the External operation mode by input of the PU operation interlock (X12) signal. This function prevents the operation mode from being accidentally unswitched from the PU operation mode. If the operation mode left unswitched from the PU operation mode, the inverter does not reply to the commands sent through external commands.
- To input the X12 signal, set "12" in any of **Pr.178 to Pr.189 (input terminal function selection)** to assign the function to a terminal. (For details on **Pr.178 to Pr.189**, refer to page 416.)
- Set **Pr.79**="7" (PU operation interlock).
- If the X12 signal is not assigned, the function of the MRS signal is switched to PU operation internal signal from MRS (output stop).

上正科技有限公司
購買、維修 此手冊零組件
電話： 037-466333
Email: service@repairtw.com
Line id: @zzzz
www.repairtw.com

X12 (MRS) signal	Function/Operation	
	Operation mode	Parameter writing*1
ON	Switching of the operation mode (External, PU, and NET) is enabled. Output is stopped during External operation.	Parameter writing enabled
OFF	Operation mode is forcefully changed to the External operation mode. External operation is enabled. Switching to the PU or NET operation mode from the External operation mode is disabled.	Writing of parameters other than **Pr.79** is disabled.

*1 Depends on the **Pr.77 Parameter write selection** setting and the writing conditions of each parameter. (Refer to page 260.)

- Functions/operations by X12 (MRS) signal ON/OFF

Operating status		X12 (MRS) signal	Operation mode	Operating status	Switching to PU or NET operation mode
Operation mode	Status				
PU/NET	during a stop	ON→OFF*2	External*3	If frequency and start commands are input from external source, the inverter runs by those commands.	Not available
	Running	ON→OFF*2			Not available
External	during a stop	OFF→ON	External*3	during a stop	Available
		ON→OFF			Not available
	Running	OFF→ON		Running→Output shutoff	Not available
		ON→OFF		Output shutoff→Running	Not available

*2 The mode is switched to the External operation mode regardless of the ON/OFF state of the start signals (STF, STR). Thus, the motor runs under the External operation mode when the X12 (MRS) signal turns OFF with either of STF or STR in an ON state.

*3 When a fault occurs, the inverter can be reset by pressing STOP RESET on the operation panel.

REMARKS

- The operation mode cannot switched to the PU operation mode with the start signal (STF, STR) in an ON state even if the X12 (MRS) signal is ON.
- If the MRS signal is ON and **Pr.79** is written to a value other than "7" when the MRS signal is used as the PU interlock signal during PU operation mode, the MRS signal will act as a regular MRS function (output stop). Also, when **Pr.79**="7", the MRS signal becomes the PU interlock signal.
- The logic of the signal follows the **Pr.17 MRS input selection** setting also when the MRS signal is used as the PU operation interlock signal. When **Pr.17** ="2", ON and OFF in the above explanation are reversed.
- Changing the terminal assignment using **Pr.178 to Pr.189 (input terminal function selection)** may affect the other functions. Set parameters after confirming the function of each terminal.

(10) Switching operation mode by external signal (X16 signal)

- When External operation and the operation from the operation panel are used together, the PU operation mode and External operation mode can be switched during a stop (during motor stop, start command OFF) by using the PU-External operation switchover signal (X16).
- When **Pr.79**="0", "6" or "7", switching between the PU operation mode and External operation mode is possible. (When **Pr.79**="6", the switchover can also be made during operation.)
- To input the X16 signal, set "16" in any of **Pr.178 to Pr.189 (input terminal function selection)** to assign the function to a terminal.

Pr.79 setting		X16 signal status and operation mode		REMARKS
		ON (External)	OFF (PU)	
0 (initial value)		External operation mode	PU operation mode	Switching among the External, PU, and NET operation modes is enabled.
1		PU operation mode		PU operation mode fixed
2		External operation mode		External operation mode fixed. (Switching to NET operation mode is enabled.)
3, 4		External/PU combined operation mode		External/PU combined operation mode fixed
6		External operation mode	PU operation mode	Switching among the External, PU, and NET operation mode is enabled while running.
7	X12 (MRS) ON	External operation mode	PU operation mode	Switching among the External, PU, and NET operation mode is enabled. (In the External operation mode, output shutoff.)
	X12 (MRS) OFF	External operation mode		External operation mode fixed. (Forcibly switched to External operation mode.)

上正科技有限公司
購買、維修 此手冊零組件
電話： 037-466333
Email: service@repairtw.com
Line id: @zzzz
www.repairtw.com

REMARKS

- The status of the operation mode follows the **Pr.340 Communication startup mode selection** setting and the ON/OFF state of the X65 and X66 signals. (For details, refer to page 306.)
- The priority among **Pr.79 and Pr.340** and signals is **Pr.79** > X12 > X66 > X65 > X16 > **Pr.340**.
- Changing the terminal assignment using **Pr.178 to Pr.189 (input terminal function selection)** may affect the other functions. Set parameters after confirming the function of each terminal.

(D) Operation command and frequency command

(11) Switching the operation mode by external signals (X65, X66 signals)

- When **Pr.79** ="0, 2 or 6", the PU operation mode and External operation modes can be changed to the Network operation mode during a stop (during motor stop, start command OFF) by the PU/NET operation switchover (X65) signal, the External/NET operation switchover (X66) signal. (When **Pr.79** ="6", switchover is enabled during operation.)
- To switch between the Network operation mode and the PU operation mode
  1) Set **Pr.79** = "0 (initial value) or 6".
  2) Set **Pr.340 Communication startup mode selection**="10 or 12".
  3) Set "65" in any of **Pr.178 to Pr.189** to assign the NET-PU operation switching signal(X65) to a terminal.
  4) When the X65 signal is ON, the PU operation mode is selected. When the X65 signal is OFF, the Network operation mode is selected.

Pr.340 setting	Pr.79 setting		X65 signal state		REMARKS
			ON (PU)	OFF (NET)	
10, 12	0 (initial value)		PU operation mode*1	NET operation mode*2	—
	1		PU operation mode		PU operation mode fixed
	2		NET operation mode		NET operation mode fixed
	3, 4		External/PU combined operation mode		External/PU combined operation mode fixed
	6		PU operation mode*1	NET operation mode*2	Switching between operation modes is enabled while running.
	7	X12 (MRS) ON	Switching between the External operation mode and PU operation mode is enabled.*2		Output is shutoff in the External operation mode.
		X12 (MRS) OFF	External operation mode		The operation mode is forcibly switched to the External operation mode.

*1 When the X66 signal is ON, the NET operation mode is selected.

*2 When the X16 signal is OFF, the PU operation mode is selected. Also, when "0" is set for **Pr.550 NET mode operation command source selection** and the communication option is not connected (communication option is the command source), the PU operation mode is selected.

- To switch between the Network operation mode and the External operation mode
  1) Set **Pr.79**="0" (initial value) or "2, "6" or "7". (When **Pr.79** ="7" and the X12 (MRS) signal is ON, the operation mode can be switched.)
  2) Set **Pr.340 Communication startup mode selection** ="0" (initial value), "1" or "2".
  3) Set "66" in one of **Pr.178 to Pr.189** to assign the NET-External operation switching signal (X66) to a terminal.
  4) When the X66 signal is ON, Network operation mode is selected. When the X66 signal is OFF, the External operation mode is selected.

Pr.340 setting	Pr.79 setting		X66 signal state		REMARKS
			ON (NET)	OFF (External)	
0 (initial value), 1, 2	0 (initial value)		NET operation mode*1	External operation mode*2	—
	1		PU operation mode		PU operation mode fixed
	2		NET operation mode*1	External operation mode	Switching to PU operation mode is disabled.
	3, 4		External/PU combined operation mode		External/PU combined operation mode fixed
	6		NET operation mode*1	External operation mode*2	Switching between operation modes is enabled while running.
	7	X12 (MRS) ON	NET operation mode*1	External operation mode*2	Output is shutoff in the External operation mode.
		X12 (MRS) OFF	External operation mode		The operation mode is forcibly switched to the External operation mode.

*1 When "**Pr.550 NET mode operation command source selection** = "0" (communication option control source)" and no communication option is connected, the External operation mode is selected.

*2 When the X16 signal is OFF, the PU operation mode is selected. Also, when the X65 signal is assigned, the operation mode follows the ON/OFF state of the X65 signal.

REMARKS

- The priority of **Pr.79** and **Pr.340** and signals is **Pr.79** > X12 > X66 > X65 > X16 > **Pr.340**.
- Changing the terminal assignment using **Pr.178 to Pr.189 (input terminal function selection)** may affect the other functions. Set parameters after confirming the function of each terminal.

♦ Parameters referred to ♦

Pr.15 Jog frequency ☞page 318
Pr.4 to Pr.6, Pr.24 to 27, Pr.232 to Pr.239 multi-speed operation ☞page 319
Pr.75 Reset selection/disconnected PU detection/PU stop selection ☞page 252
Pr.161 Frequency setting/key lock operation selection ☞page 256
Pr.178 to Pr.182 (input terminal function selection) ☞page 416
Pr.190 to Pr.196 (output terminal function selection) ☞page 370
Pr.340 Communication startup mode selection ☞page 307
Pr.550 NET mode operation command source selection ☞page 308

5.9.2 Startup in Network operation mode at power-ON

When power is switched ON or when power comes back ON after an instantaneous power failure, the inverter can be started up in the Network operation mode. After the inverter starts up in the Network operation mode, parameter writing and operation can be commanded from programs.
Set this mode when performing communication operation using the RS-485 terminals or a communication option.

Pr.	Name	Initial value	Setting range	Description
79 **D000**	**Operation mode selection**	0	0 to 4, 6, 7	Selects the operation mode. (Refer to page 299.)
340 **D001**	**Communication startup mode selection**	0	0	Follows the **Pr.79** setting.
			1,2	The inverter starts up in the Network operation mode. If an instantaneous power failure occurs when "2" is set, the operating status before the instantaneous power failure is maintained.
			10,12	The inverter starts up in the Network operation mode. The operation mode can be changed between the PU operation mode and Network operation mode from the operation panel. If an instantaneous power failure occurs when "12" is set, running is continued at the condition before the instantaneous power failure.

(1) Selecting the operation mode for power-ON (Pr.340)

- Depending on the **Pr.79** and **Pr.340** settings, the operation mode at power-ON (reset) changes as described below.

Pr.340 setting	Pr.79 setting	Operation mode at power-ON, at power restoration, or after a reset	Operation mode switching
0 (initial value)	0 (initial value)	External operation mode	Switching among the External, PU, and NET operation modes is enabled.*2
	1	PU operation mode	PU operation mode fixed
	2	External operation mode	Switching between the External and NET operation modes is enabled. Switching to PU operation mode is disabled
	3, 4	External/PU combined operation mode	Operation mode switching is disabled
	6	External operation mode	Switching among the External, PU, and NET operation mode is enabled while running.
	7	X12 (MRS) signal ON .....External operation mode	Switching among the External, PU, and NET operation modes is enabled.*2
		X12 (MRS) signal OFF .....External operation mode	External operation mode fixed. (Forcibly switched to External operation mode.)
1, 2*1	0	NET operation mode	Same as **Pr.340**="0" setting
	1	PU operation mode	
	2	NET operation mode	
	3, 4	External/PU combined operation mode	
	6	NET operation mode	
	7	X12(MRS) signal ON .....NET operation mode	
		X12 (MRS) signal OFF .....External operation mode	
10, 12*1	0	NET operation mode	Switching between the PU and NET operation mode is enabled*3
	1	PU operation mode	Same as **Pr.340**="0" setting
	2	NET operation mode	NET operation mode fixed
	3, 4	External/PU combined operation mode	Same as **Pr.340**="0" setting
	6	NET operation mode	Switching between the PU and NET operation mode is enabled while running.*3
	7	External operation mode	Same as **Pr.340**="0" setting

*1 Use **Pr.340**="2 or 12" setting to perform communication with the RS-485 terminals.
Even if an instantaneous power failure occurs while **Pr.57 Restart coasting time** ≠ "9999" (with automatic restart after instantaneous power failure), inverter continues operation at the condition before the instantaneous failure.

*2 The operation mode cannot be directly changed between the PU operation mode and Network operation mode.

*3 Switching between the PU and NET operation modes is available with the PU EXT key on the operation panel (FR-DU08) and the X65 signal.

♦ Parameters referred to ♦

Pr.57 Restart coasting time ☞page 511, page 517
Pr.79 Operation mode selection ☞page 299

上正科技有限公司
購買・維修 此手冊零組件
電話： 037-466333
Email: service@repairtw.com
Line id: @zzzz
www.repairtw.com

5.9.3 Start command source and frequency command source during communication operation

The start and frequency commands from an external device can be made valid when using the RS-485 terminals or the communication option. The command source in the PU operation mode can also be selected.

Pr.	Name	Initial value	Setting range	Description
338 D010	Communication operation command source	0	0	Start command source is communication.
			1	Start command source is external.
339 D011	Communication speed command source	0	0	Frequency command source is communication.
			1	Frequency command source is external.
			2	Frequency command source is external. (When there is no external input, the frequency command via communication is valid, and the frequency command from terminal 2 is invalid.)
550 D012	NET mode operation command source selection	9999	0	The communication option is the command source when in the NET operation mode.
			1	The RS-485 terminals are the command source when in the NET operation mode.
			9999	Communication option is recognized automatically. Normally, the RS-485 terminals are the command source. When the communication option is mounted, the communication option is the command source.
551 D013	PU mode operation command source selection	9999	1	The RS-485 terminals are the command source when in the PU operation mode.
			2	The PU connector is the command source when in the PU operation mode.
			3	The USB connector is the command source when in the PU operation mode.
			9999	USB automatic recognition Normally, the PU connector is the command source. When the USB is connected, the USB connector is the command source.

上正科技有限公司
購買、維修 此手冊零組件
電話： 037-466333
Email: service@repairtw.com
Line id: @zzzz
www.repairtw.com

(1) Selection of command source in Network operation mode (Pr.550)

- Either of the RS-485 terminals or the communication option can be specified for the command source in the Network operation mode.
- For example, whether or not the communication option is mounted, set **Pr.550** ="1" to write parameters from or input the start and frequency commands via RS-485 terminals in the Network operation mode.

REMARKS

- In the initial setting, "9999" (communication option automatic recognition) is set for **Pr.550**. Thus, if the communication option is mounted, parameters cannot be written or the start and frequency commands cannot be sent by communications that use the RS-485 terminals. (Monitoring or parameter reading can be performed.)

(2) Selection of the command source of the PU operation mode (Pr.551)

- Any of the PU connector, RS-485 terminals, or USB connector can be specified as the command source in the PU operation mode.
- Set **Pr.551**="1" to use communication connected to the RS-485 terminals to write parameters or execute start and frequency commands in the PU operation mode. Set **Pr.551**="3" or "9999" to use the USB connector.

REMARKS

- When **Pr.550** ="1" (NET mode RS-485 terminals) and **Pr.551** ="1" (PU mode RS-485 terminals), the PU operation mode has a precedence. For this reason, if the communication option is not mounted, switching to the Network operation mode is not longer possible.
- Changed setting values are enabled at power-ON or inverter reset.

Pr.550 setting	Pr.551 setting	Command source				REMARKS
		PU connector	USB connector	RS-485 terminals	Communication option	
0	1	×	×	PU operation mode*1	NET operation mode*2	
	2	PU operation mode	×	×	NET operation mode*2	
	3	×	PU operation mode	×	NET operation mode*2	
	9999 (initial value)	PU operation mode*3	PU operation mode*3	×	NET operation mode*2	
1	1	×	×	PU operation mode*1	×	Switching to NET operation mode disabled
	2	PU operation mode	×	NET operation mode	×	
	3	×	PU operation mode	NET operation mode	×	
	9999 (initial value)	PU operation mode*3	PU operation mode*3	NET operation mode	×	
9999 (initial value)	1	×	×	PU operation mode*1	NET operation mode*2	
	2	PU operation mode	×	×	NET operation mode*2	With communication option
				NET operation mode	×	Without communication option
	3	×	PU operation mode	×	NET operation mode*2	With communication option
				NET operation mode	×	Without communication option
	9999 (initial value)	PU operation mode*3	PU operation mode*3	×	NET operation mode*2	With communication option
				NET operation mode	×	Without communication option

上正科技有限公司
購買、維修 此手冊零組件
電話： 037-463833
Email: service@repairtw.com
Line Id: @zzzz
www.repairtw.com

*1 The Modbus-RTU protocol cannot be used in the PU operation mode. To use the Modbus-RTU protocol, set **Pr.551**="2".
*2 If the communication option is not mounted, switching to the Network operation mode is not longer possible.
*3 When **Pr.551**= "9999", the priority of the PU command source is USB connector > PU connector.

(D) Operation command and frequency command

(3) Controllability through communication

Command source	Condition (Pr.551 setting)	Item	Controllability in each operation mode					
			PU operation	External operation	External/PU combined operation mode 1 (Pr.79 =3)	External/PU combined operation mode 2 (Pr.79 =4)	NET operation (when RS-485 terminals are used) *6	NET operation (when communication option is used) *7
Control by RS-485 communication via PU connector	2 (PU connector) 9999 (automatic recognition, without USB connection)	Operation (start) command	○	×	×	○	×	
		Operation (stop) command	○	Δ*3	Δ*3	○	Δ*3	
		Running frequency	○	×	○	×	×	
		Monitor	○	○	○	○	○	
		Parameter writing	○*4	×*5	○*4	○*4	×*5	
		Parameter read	○	○	○	○	○	
		Inverter reset	○	○	○	○	○	
	Other than the above	Operation (start) command	×	×	×	×	×	
		Operation (stop) command	Δ*3	Δ*3	Δ*3	Δ*3	Δ*3	
		Running frequency	×	×	×	×	×	
		Monitor	○	○	○	○	○	
		Parameter writing	×*5	×*5	×*5	×*5	×*5	
		Parameter read	○	○	○	○	○	
		Inverter reset	○	○	○	○	○	
Control by communication via RS-485 terminals	1 (RS-485 terminals)	Operation command (start, stop)	○	×	×	○	×	
		Running frequency	○	×	○	×	×	
		Monitor	○	○	○	○	○	
		Parameter writing	○*4	×*5	○*4	○*4	×*5	
		Parameter read	○	○	○	○	○	
		Inverter reset	○	○	○	○	○	
	Other than the above	Operation command (start, stop)	×	×	×	×	○*1	×
		Running frequency	×	×	×	×	○*1	×
		Monitor	○	○	○	○	○	○
		Parameter writing	×*5	×*5	×*5	×*5	○*4	×*5
		Parameter read	○	○	○	○	○	○
		Inverter reset	×	×	×	×	○*2	×
Control via USB connector	3 (USB connector) 9999 (automatic recognition, with USB connection)	Operation command (start, stop)	○	×	×	○	×	
		Running frequency	○	×	○	×	×	
		Monitor	○	○	○	○	○	
		Parameter writing	○*4	×*5	×*5	×*5	×*5	
		Parameter read	○	○	○	○	○	
		Inverter reset	○	○	○	○	○	
	Other than the above	Operation command (start, stop)	×	×	×	×	×	
		Running frequency	×	×	×	×	×	
		Monitor	○	○	○	○	○	
		Parameter writing	×*5	×*5	×*5	×*5	×*5	
		Parameter read	○	○	○	○	○	
		Inverter reset	○	○	○	○	○	
Communication option (via communication)	—	Operation command (start, stop)	×	×	×	×	×	○*1
		Running frequency	×	×	×	×	×	○*1
		Monitor	○	○	○	○	○	○
		Parameter writing	×*5	×*5	×*5	×*5	×*5	○*4
		Parameter read	○	○	○	○	○	○
		Inverter reset	×	×	×	×	×	○*2
External terminal at the control circuit	—	Inverter reset	○	○	○	○	○	
		Operation command (start, stop)	×	○	○	×	×*1	
		Frequency setting	×	○	×	○	×*1	

○: Valid ×: Invalid Δ: Partially valid

上正科技有限公司
購買・維修 觸手冊零組件
電話： 037-466833
Email: service@repairtw.com
Line id: @zzzz
www.repairtw.com

*1 Follows the **Pr.338 Communication operation command source** and **Pr.339 Communication speed command source** settings. (Refer to page 308.)

*2 At occurrence of RS-485 communication error, the inverter cannot be reset from the computer.

*3 PU stop is only enabled. PS is displayed on the operation panel during PU stop. Follows the **Pr.75 Reset selection/disconnected PU detection/PU stop selection** setting. (Refer to page 252.)

*4 Writing of some parameters may be disabled by the **Pr.77 Parameter write selection** setting and the operating condition. (Refer to page 260.)

*5 Some parameters are write-enabled independently of the operation mode and command source presence/absence. Writing is also enabled when **Pr.77**="2". (Refer to page 260.) Parameter clear is disabled.

*6 When **Pr.550 NET mode operation command source selection**="1" (RS-485 terminals enabled), or **Pr.550 NET mode operation command source selection**="9999" with no communication option connected.

*7 When **Pr.550 NET mode operation command source selection**="0" (communication option enabled), or **Pr.550 NET mode operation command source selection**="9999" with communication option connected.

(4) Operation at fault

<table>
<tr><th rowspan="2">Fault record</th><th rowspan="2">Conditions (Pr.551 setting)</th><th colspan="6">Operation in each operation mode at error occurrences</th></tr>
<tr><th>PU operation</th><th>External operation</th><th>External/PU combined operation mode 1 (Pr.79 =3)</th><th>External/PU combined operation mode 2 (Pr.79 =4)</th><th>NET operation (when RS-485 terminals are used)*5</th><th>NET operation (when communication option is used)*6</th></tr>
<tr><td>Inverter fault</td><td>—</td><td colspan="6">Stop</td></tr>
<tr><td rowspan="2">PU connector disconnection</td><td>2 (PU connector) 9999 (automatic recognition)</td><td colspan="6">Stop/continued *1*4</td></tr>
<tr><td>Other than 2</td><td colspan="6">Stop/continued *1</td></tr>
<tr><td rowspan="2">Communication error at PU connector</td><td>2 (PU connector)</td><td>Stop/continued *2</td><td>Continued</td><td colspan="2">Stop/ continued *2</td><td colspan="2">Continued</td></tr>
<tr><td>Other than 2</td><td colspan="6">Continued</td></tr>
<tr><td rowspan="2">Communication error at RS-485 terminals</td><td>1 (RS-485 terminals)</td><td>Stop/continued *2</td><td>Continued</td><td colspan="2">Stop/ continued *2</td><td colspan="2">Continued</td></tr>
<tr><td>Other than 1</td><td colspan="4">Continued</td><td>Stop/continued *2</td><td>Continued</td></tr>
<tr><td rowspan="2">Communication error at USB connector</td><td>3 (USB connector) 9999 (automatic recognition)</td><td>Stop/continued *2</td><td colspan="5">Continued</td></tr>
<tr><td>Other than 3</td><td colspan="6">Continued</td></tr>
<tr><td>Communication error at communication option</td><td>—</td><td colspan="5">Continued</td><td>Stop/continued *3</td></tr>
</table>

*1 Selectable with **Pr.75 Reset selection/disconnected PU detection/PU stop selection**

*2 Selectable with **Pr.122 PU communication check time interval, Pr.336 RS-485 communication check time interval,** and **Pr.548 USB communication check time interval**

*3 Follows the communication option

*4 In the PU JOG operation mode, operation always stops when the PU is disconnected. The operation of PU disconnection (E.PUE) follows the **Pr.75 Reset selection/disconnected PU detection/PU stop selection** setting.

*5 When **Pr.550 NET mode operation command source selection**= "1" (RS-485 terminals enabled), or **Pr.550 NET mode operation command source selection**="9999" with no communication option connected.

*6 When **Pr.550 NET mode operation command source selection**="0" (communication option enabled), or **Pr.550 NET mode operation command source selection**="9999" with communication option connected.

上正科技有限公司
購買、維修此手冊零組件
電話： 037-466333
Email: service@repairtw.com
Line id: @zzzz
www.repairtw.com

(D) Operation command and frequency command

(5) Selection of control source in Network operation mode (Pr.338, Pr.339)

- There are two control sources: the start command source, which controls the signals related to the inverter stand command and function selection, and the speed command source, which controls signals related to frequency setting.
- The table below shows the commands from the external terminals and communication (RS-485 terminals or communication option) in the Network operation mode.

Operation location selection			Pr.338 Communication operation command source		0: NET			1: EXT			REMARKS
			Pr.339 Communication speed command source		0: NET	1: EXT	2: EXT	0: NET	1: EXT	2: EXT	
Fixed function (terminal-equivalent function)			Running frequency from communication		NET	—	NET	NET	—	NET	
			Terminal 2		—	External	—	—	—	—	
			Terminal 4		—	External		—	External		
			Terminal 1		Compensation						
Selectable function	Pr.178 to Pr.189 setting	0	RL	Low-speed operation command/remote setting Clear/Stop-on-contact selection 0	NET	External		NET	External		**Pr.59** ="0" (multi-speed) **Pr.59** ≠"0" (remote) **Pr.270** ="1, 3, 11, or 13" (stop-on-contact)
		1	RM	Middle-speed operation command/remote setting deceleration	NET	External		NET	External		
		2	RH	High-speed operation command/remote setting acceleration	NET	External		NET	External		
		3	RT	Second function selection/ stop-on-contact selection 1	NET			External			**Pr.270** ="1, 3, 11, or 13" (stop-on-contact)
		4	AU	Terminal 4 input selection	—	Combined		—	Combined		
		5	JOG	Jog operation selection	—			External			
		6	CS	Selection of automatic restart after instantaneous power failure, flying start	External						
		7	OH	External thermal relay input	External						
		8	REX	15-speed selection	NET	External		NET	External		**Pr.59** ="0" (multi-speed)
		9	X9	Third function selection	NET			External			
		10	X10	Inverter run enable signal	External						
		11	X11	FR-HC2 connection, instantaneous power failure detection	External						
		12	X12	PU operation external interlock	External						
		13	X13	External DC injection brake operation start	NET			External			
		14	X14	PID control valid terminal	NET	External		NET	External		
		15	BRI	Brake opening completion signal	NET			External			
		16	X16	PU/External operation switchover	External						
		17	X17	Load pattern selection forward/reverse rotation boost	NET			External			
		18	X18	V/F switchover	NET			External			
		19	X19	Load torque high-speed frequency	NET			External			
		20	X20	S-pattern acceleration/ deceleration C switchover	NET			External			
		22	X22	Orientation command	NET			External			
		23	LX	Pre-excitation/servo ON	NET			External			
		24	MRS	Output stop	Combined			External			**Pr.79** ≠ "7"
				PU operation interlock	External						**Pr.79** = "7" When X12 signal is not assigned.
		25	STOP	Start self-holding selection	-			External			
		26	MC	Control mode switchover	NET			External			
		27	TL	Torque limit selection	NET			External			
		28	X28	Start-time tuning start external input	NET			External			
		37	X37	Traverse function selection	NET			External			

上正科技有限公司
購買、維修 此手冊零組件
電話： 037-466333
Email: service@repairtw.com
Line id: @zzzz
www.repairtw.com

Operation location selection					Pr.338 Communication operation command source	0: NET			1: EXT			REMARKS
					Pr.339 Communication speed command source	0: NET	1: EXT	2: EXT	0: NET	1: EXT	2: EXT	
Selectable function	Pr.178 to Pr.189 setting	42	X42	Torque bias selection 1		NET			External			
		43	X43	Torque bias selection 2		NET			External			
		44	X44	P/PI control switchover		NET			External			
		45	BRI2	Second brake sequence open completion		NET			External			
		46	TRG	Trace trigger input		NET			External			
		47	TRC	Trace sampling start/end		NET			External			
		50	SQ	Sequence start		External, NET			External			**Pr.414**="1": Valid when there is external or network input **Pr.414**="2": External
		51	X51	Fault clear signal		Combined			External			
		60	STF	Forward rotation command		NET			External			
		61	STR	Reverse rotation command		NET			External			
		62	RES	Inverter reset		External						
		64	X64	PID forward/reverse action switchover		NET	External		NET	External		
		65	X65	PU/NET operation switchover		External						
		66	X66	External/NET operation switchover		External						
		67	X67	Command source switchover		External						
		68	NP	Simple position pulse train sign		External						
		69	CLR	Simple position droop pulse clear		External						
		70	X70	DC feeding operation permission		NET			External			
		71	X71	DC feeding cancel		NET			External			
		72	X72	PID integral value reset		NET	External		NET	External		
		73	X73	Second PID P control switchover		NET	External		NET	External		
		74	X74	Magnetic flux decay output shutoff signal		NET			External			
		76	X76	Proximity dog		External						
		77	X77	Pre-charge end command		NET	External		NET	External		
		78	X78	Second pre-charge end command		NET	External		NET	External		
		79	X79	Second PID forward/reverse action switchover		NET	External		NET	External		
		80	X80	Second PID control valid terminal		NET	External		NET	External		
		87	X87	Sudden stop		Combined			External			
		92	X92	Emergency stop		External						
		93	X93	Torque limit selection		NET			External			

上正科技有限公司
購買、維修 此手冊零組件
電話： 037-466333
email: service@repairtw.com
Line Id: @zzzz
www.repairtw.com

[Explanation of terms in table]

External (EXT) : Commands from external terminal are only valid.
NET : Commands via communication are only valid.
Combined : Command from both external terminal and communication is valid.
— : Command from either of external terminal and communication is invalid.
Compensation : Commands are valid only from external terminal signals when **Pr.28 Multi-speed input compensation selection** ="1".

REMARKS

- The command source of communication follows the **Pr.550** and **Pr.551** settings.
- The **Pr.338** and **Pr.339** settings can be changed while the inverter is running when **Pr.77** = "2". Note that the setting change is applied after the inverter has stopped. Until the inverter has stopped, communication operation command source and communication speed command source before the setting change are valid.

(6) Command source switchover via external terminals (X67)

- In the Network operation mode, the start command source and speed command source can be switched over by the command source switchover signal (X67). This can be used to control signal inputs from both the external terminals and via communication.
- For the X67 signal, set "67" to any of **Pr.178 to Pr.189 (input terminal function selection)** to assign the function to a control terminal.
- When the X67 signal is OFF, the start command source and speed command source are given via control terminals.

X67 signal state	Start command source	Speed command source
Signal not assigned	According to **Pr.338**	According to **Pr.339**
ON		
OFF	Commands from external terminals are only valid.	

REMARKS

- The ON/OFF state of the X67 signal is applied only during a stop. When the terminals are switched during operation, the ON/OFF state is applied after a stop.
- When the X67 is OFF, a reset via communication is disabled.
- Changing the terminal assignment using **Pr.178 to Pr.189 (input terminal function selection)** may affect the other functions. Set parameters after confirming the function of each terminal.

♦ Parameters referred to ♦

Pr.28 Multi-speed input compensation selection ☞page 319
Pr.59 Remote function selection ☞page 288
Pr.79 Operation mode selection ☞page 299

上正科技有限公司
購買、維修 此手冊零組件
電話： 037-466333
Email: service@repairtw.com
Line id: @zzzz
www.repairtw.com

5.9.4 Reverse rotation prevention selection

This function can prevent reverse rotation fault resulting from the incorrect input of the start signal.

Pr.	Name	Initial value	Setting range	Description
78 D020	**Reverse rotation prevention selection**	0	0	Both forward and reverse rotations allowed
			1	Reverse rotation disabled
			2	Forward rotation disabled

- Set this parameter to limit the motor rotation to only one direction.
- This parameter is valid for all of the reverse rotation and forward rotation keys of the operation panel (FR-DU08) and of parameter unit (FR-PU07), the start signals (STF, STR signals) via external terminals, and the forward and reverse rotation commands through communication.

5.9.5 Frequency setting via pulse train input

A pulse train input to the terminal JOG can be used to set the inverter's speed command.
Moreover, speed synchronized operation of an inverter can be performed by using the pulse train output together with the terminal JOG.

Pr.	Name	Initial value		Setting range	Description	
		FM	CA			
					Pulse train input (terminal JOG)	Pulse train output (terminal FM)
291 D100	Pulse train I/O selection	0		0	JOG signal*1	FM output*2
				1	Pulse train input	FM output*2
				10*2	JOG signal*1	High-speed pulse train output (50% duty)
				11*2	Pulse train input	High-speed pulse train output (50% duty)
				20*2	JOG signal*1	High-speed pulse train output (ON width is fixed)
				21*2	Pulse train input	High-speed pulse train output (ON width is fixed)
				100*2	Pulse train input	High-speed pulse train output (ON width is fixed) Output of pulse train input as is
384 D101	Input pulse division scaling factor	0		0	Pulse train input disabled	
				1 to 250	Division ratio on the input pulse. The frequency resolution on the input pulse changes according to this setting.	
385 D110	Frequency for zero input pulse	0 Hz		0 to 590 Hz	Sets the frequency when the input pulse is zero (bias).	
386 D101	Frequency for maximum input pulse	60 Hz	50 Hz	0 to 590 Hz	Sets the frequency when the input pulse is maximum (gain).	

上正科技有限公司
購買、維修 此手冊零組件
電話： 037-466333
Email: service@repairtw.com
Line id: @zzzz
www.repairtw.com

*1 Function assigned to **Pr.185 JOG terminal function selection**.
*2 Valid only for the FM type inverters.

(1) Selection of pulse train input(Pr.291)

- Setting **Pr.291 Pulse train I/O selection** = "1, 11, 21, 100" and **Pr.384 Input pulse division scaling factor** ≠ "0" changes the function of terminal JOG to a pulse train input so that the frequency can be set to the inverter. In the initial setting, the JOG signal is assigned to terminal JOG. A maximum pulse train of 100k pulses/s can be input.
- Connection with an open collector output system pulse generator

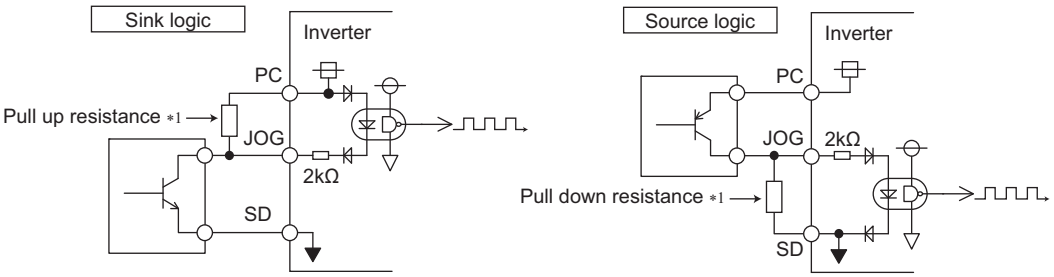

*1 When the wiring length is long with open collector outputs, the influence of stray capacitance causes the pulse to flatten out and prevents the input pulse from being recognized.
When the wiring length is long (10 m or longer of shielded twisted pair cable with a recommended cable gauge of 0.75 mm^2), connect the open collector output signal to the power supply by an external pull-up resistance. The table below shows the reference resistance values for wiring length. The stray capacitance of the wiring changes considerably according to how the cable is laid, thus the above wiring lengths are not guaranteed values. When using a pull-up/down resistance, check the permissible load of the resistor and the permissible load current of the output transistor, and use within the permissible range.

Wiring length	Less than 10 m	10 to 50 m	50 to 100 m
Pull-up/down resistance	Not required	1 kΩ	470 Ω
Load current (reference)	10 mA	35 mA	65 mA

(D) Operation command and frequency command

- Connection with a complementary output system pulse generator

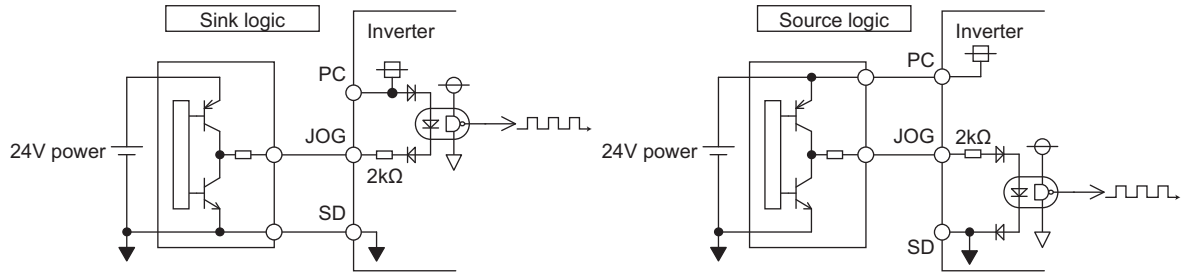

REMARKS

- When pulse train input is selected, the function assigned to terminal JOG by **Pr.185 JOG terminal function selection** is invalid.
- When "2" (simple position pulse train command by pulse train input) is set to **Pr.419 Position command source selection**, the JOG terminal becomes the simple position pulse train terminal regarding of the **Pr.291** setting.
- **Pr.291** is the selection parameter for pulse train output/FM output. Thus, before changing the setting, check the specifications of the device connected to the terminal FM. (For the pulse train output, refer to page 360.)

(2) Pulse train input specification

Item		Specification
Supported pulse method		Open collector output. Complementary output. (24 V power supply voltage)
HIGH input level		20 V or more (voltage between JOG and SD)
LOW input level		5 V or less (voltage between JOG and SD)
Maximum input pulse rate		100 kpps
Minimum input pulse width		2.5 us
Input resistance/load current		2 kΩ (typ)/10 mA (typ)
Maximum wiring length (reference value)	Open collector output method	10 m (0.75 mm^2/twisted pair)
	Complementary output method	100 m (output resistance 50 Ω)*1
Detection resolution		1/3750

*1 The wiring length of complementary output is dependent on the output wiring specification of the complementary output unit. The stray capacitance of the wiring changes considerably according to how the cable is laid, thus the maximum wiring length is not a guaranteed value.

上正科技有限公司
購買、維修 此手冊零組件
電話： 037-466333
Email: service@repairtw.com
Line id: @zzzz
www.repairtw.com

(3) Adjustment of pulse train and frequency (Pr.385, Pr.386)

- The frequency during zero input pulse and maximum input pulse can be set with **Pr.385 Frequency for zero input pulse** and **Pr.386 Frequency for maximum input pulse**, respectively.

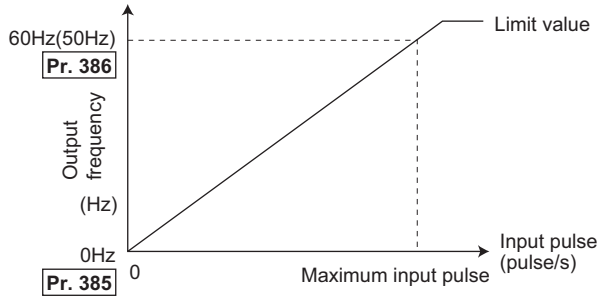

* Limit value = (**Pr.386** - **Pr.385**) × 1.1 + **Pr.385**

(4) How to calculate the input pulse division scaling factor (Pr.384)

- The maximum number of pulses can be calculated by the following formula with **Pr.384Input pulse division scaling factor**:
  Maximum number of pulses (pulse/s) = **Pr.384** × 400 (maximum 100k pulses/s)
  (number of detectable pulses = 11.45 pulses/s)
- For example, to run the invert at 0 Hz when pulse train input is zero and at 30 Hz when pulse train is 4000 pulses/sec, set the inverter as follows:
  Pr.384 = 10 (maximum number of input pulses 4000 pulses/s)
  Pr.385 = 0 Hz, **Pr.386** = 30 Hz (pulse train limit value 33 Hz)

REMARKS

- The priority of the frequency command by the external signals is "Jog operation > multi-speed operation > terminal 4 analog input". When pulse train input is enabled (**Pr.291** = "1, 11, 21, 100" and **Pr.384** ≠ "0"), terminal 2 analog input becomes invalid.

(5) Speed synchronized operation by pulse input/output

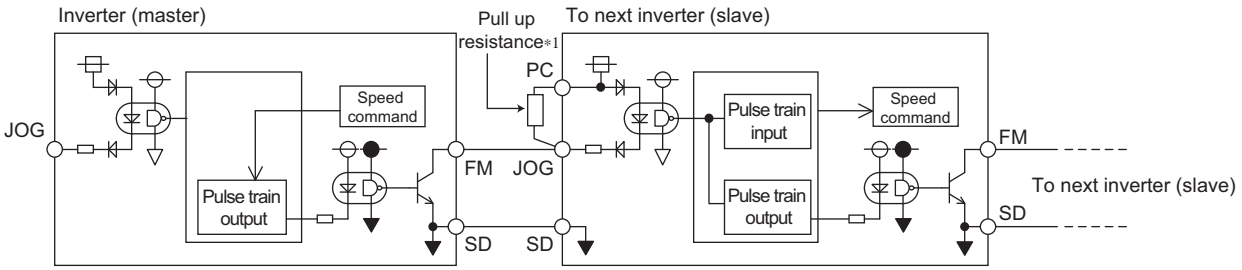

*1 When the wiring length between FM and JOG is long, the influence of stray capacitance causes the pulse to flatten out and prevents the input pulse from being recognized. When the wiring length is long (10 m or longer of shielded twisted pair cable with a recommended cable size of 0.75 mm^2), connect the terminal JOG to the terminal PC by an external pull-up resistance. The table below shows the reference resistance values for wiring length.

Wiring length	Less than 10 m	10 to 50 m	50 to 100 m
Pull-up resistance	Not required	1 kΩ	470 Ω
Load current (reference)	10 mA	35 mA	65 mA

The stray capacitance of the wiring changes considerably according to how the cable is laid, thus the above wiring lengths are not guaranteed values. When using a pull-up/down resistance, check the permissible load of the resistor and the permissible load current (terminal PC: 100 mA, high-speed pulse train output: 85 mA), and use within the permissible range.

- Setting "100" to **Pr.291** enables out of the pulse train input as it is to the pulse train output (terminal FM). Connecting in a daisy chain enables speed synchronized operation of multiple inverters.
- Set **Pr.384** to "125" for inverters that receive pulse train since the maximum pulse train output is 50k pulses/s.
- The maximum number of input pulses should be 50k pulses/s.
- When performing synchronized operation, wire according to the following procedure. (This is to prevent contact input of 24 V from being applied to the terminal FM.)
  1) Set pulse train output (setting other than "0, 1") to **Pr.291** on the master side inverter.
  2) Turn the inverter power supply OFF.
  3) Wire the slave side terminal JOG-SD to the master side terminal FM-SD.
  4) Turn the inverter power supply ON.

上平科技有限公司
購買、維修 此手冊零組件
電話： 037-466333
Email: service@repairtw.com
Line id: @zzzz
www.repairtw.com

REMARKS

- After changing the **Pr.291** setting, connect the JOG terminal to the terminal FM-SD. When FM output (voltage output) is taken as the pulse train, take caution to prevent voltage from being applied to the terminal FM.
- Use the sink logic (factory setting) for the slave side inverter. The inverter does not operate properly with source logic.

(6) Speed synchronized operation specification

Item	Specification
Output pulse format	Pulse width fixed (10 μs)
Pulse rate	0 to 50 kpps
Pulse propagation delay	1 to 2 μs/1 unit*1

*1 A pulse transmission delay of about 1 to 2 μs in the slave occurs and further increases when the wiring length is long.

♦ **Parameters referred to** ♦

Pr.291 (Pulse train output) page 356
Pr.419 Position command source selection page 239

5.9.6 JOG operation

The frequency and acceleration/deceleration time for JOG operation can be set. JOG operation is possible in both External operation and PU.
JOG operation can be used for conveyor positioning, test run, etc.

Pr.	Name	Initial value	Setting range	Description
15 **D200**	**Jog frequency**	5 Hz	0 to 590 Hz	Sets the frequency during JOG operation.
16 **F002**	**Jog acceleration/ deceleration time**	0.5 s	0 to 3600 s (360 s*1)	Sets motor acceleration/deceleration time during JOG operation. For the acceleration/deceleration time, set the time until the frequency*2 set to **Pr.20 Acceleration/deceleration reference frequency** is reached. The acceleration/deceleration times cannot be set separately.

The above parameter is displayed as a simple mode parameter when the parameter unit (FR-PU07) is mounted. Setting of this parameter is enabled when the operation panel (FR-DU08) is connected and "0" is set to **Pr.160 User group read selection**. (Refer to page 268.)

*1 When **Pr.21 Acceleration/deceleration time increments** = "0" (initial value), the setting range is "0 to 3600 s" and the setting increment is "0.1 s". When **Pr.21** = "1" is set, this means a setting range of "0 to 360 s" and the setting increment is "0.01 s".

*2 The **Pr.20** initial value is set to 60 Hz for the FM type and to 50 Hz for the CA type.

(1) JOG operation in the External operation

- Operation can be started and stopped by the start signals (STF and STR signals) when the Jog operation selection (JOG) signal is ON. (For the operation method, refer to page 118.)
- In the initial setting, the JOG signal is assigned to the terminal JOG.

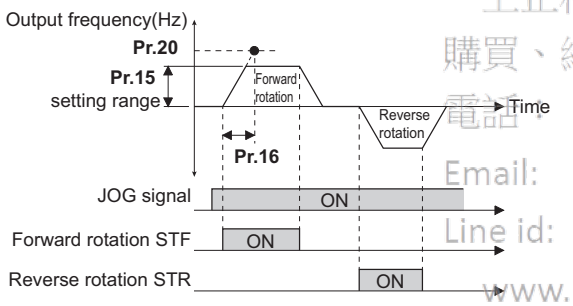

上正科技有限公司
購買、維修 此手冊零組件
電話: 037-466333
Email: service@repairtw.com
Line id: @zzzz
www.repairtw.com

(2) JOG operation in PU

- When the operation panel (FR-DU08) or parameter unit (FR-PU07) is in the JOG operation mode, the motor jogs only while the start button is pressed. (For the operation method, refer to page 119.)

REMARKS

- The reference frequency of the acceleration/deceleration time differs according to the **Pr.29 Acceleration/deceleration pattern selectionsetting.** (Refer to page 283.)
- The **Pr.15** setting should be equal to or higher than the **Pr.13 Starting frequency** setting.
- The JOG signal can be assigned to an input terminal by setting **Pr.178 to Pr.189 (input terminal function selection)**. Changing the terminal assignment may affect other functions. Set parameters after confirming the function of each terminal.
- During JOG operation, the second acceleration/deceleration cannot be selected with the RT signal. (Other second functions are enabled. (Refer to page 420.))
- When **Pr.79 Operation mode selection**="4", JOG operation is started by one push of FWD / REV on the operation panel (FR-DU08) and stopped by STOP RESET.
- This function is invalid when **Pr.79**= "3".
- Under the position control, when the position command speed creation is completed and the droop pulse is within in-position width, the external JOG operation can be operated. (The JOG operation cannot be performed from PU.)

♦ Parameters referred to ♦

Pr.13 Starting frequency ☞page 291
Pr.20 Acceleration/deceleration reference frequency, Pr.21 Acceleration/deceleration time increments ☞page 278
Pr.29 Acceleration/deceleration pattern selection ☞page 283
Pr.79 Operation mode selection ☞page 299
Pr.178 to Pr.182 (input terminal function selection) ☞page 416

5.9.7 Operation by multi-speed setting

Use these parameters to change among pre-set operation speeds with the terminals. The speeds are pre-set with parameters.
Any speed can be selected by simply turning ON/OFF the contact signals (RH, RM, RL, and REX signals).

Pr.	Name	Initial value		Setting range	Description
		FM	CA		
28 D300	**Multi-speed input compensation selection**	0		0	Without compensation
				1	With compensation
4 D301	**Multi-speed setting (high speed)**	60 Hz	50 Hz	0 to 590 Hz	Sets the frequency when RH is ON.
5 D302	**Multi-speed setting (middle speed)**	30 Hz		0 to 590 Hz	Sets the frequency when RM is ON.
6 D303	**Multi-speed setting (low speed)**	10 Hz		0 to 590 Hz	Sets the frequency when RL is ON.
24 D304	**Multi-speed setting (speed 4)**	9999		0 to 590 Hz, 9999	Frequency from 4th speed to 15th speed can be set according to the combination of the RH, RM, RL and REX signals. 9999: Not selected
25 D305	**Multi-speed setting (speed 5)**				
26 D306	**Multi-speed setting (speed 6)**				
27 D307	**Multi-speed setting (speed 7)**				
232 D308	**Multi-speed setting (speed 8)**				
233 D309	**Multi-speed setting (speed 9)**				
234 D310	**Multi-speed setting (speed 10)**				
235 D311	**Multi-speed setting (speed 11)**				
236 D312	**Multi-speed setting (speed 12)**				
237 D313	**Multi-speed setting (speed 13)**				
238 D314	**Multi-speed setting (speed 14)**				
239 D315	**Multi-speed setting (speed 15)**				

上正科技有限公司
購買、維修 此手冊零組件
電話： 037-466333
Email: service@repairtw.com
Line id: @zzzz
www.repairtw.com

(1) Multi-speed setting (Pr.4 to Pr.6)

- The inverter operates at frequencies set in **Pr.4** when RH signal is ON, **Pr.5** when RM signal is ON and **Pr.6** when RL signal is ON.

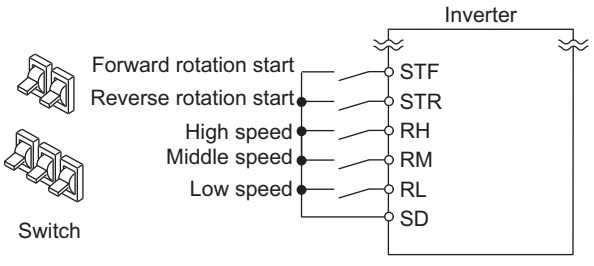

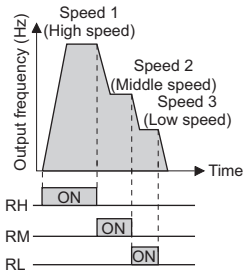

REMARKS

- In the initial setting, when two or more of multi-speed settings are simultaneously selected, priority is given to the set frequency of the lower signal.
  For example, when RH and RM signals turn ON, RM signal (**Pr.5**) has a higher priority.
- The RH, RM and RL signals are assigned to the terminals RH, RM and RL in the initial status.
  Set "0 (RL)", "1 (RM)", and "2 (RH)" in any of **Pr.178 to Pr.189 (input terminal function selection)** to assign the signals to other terminals.

(D) Operation command and frequency command

(2) Multi-speed setting for 4th speed or more (Pr.24 to Pr.27, Pr.232 to Pr.239)

- The frequency from 4th speed to 15th speed can be set by the combination of the RH, RM, RL, and REX signals. Set the running frequencies in **Pr.24 to Pr.27, Pr.232 to Pr.239**. (In the initial status, 4th to 15th speeds are invalid.)
- For the terminal used for REX signal input, set "8" in any of **Pr.178 to Pr.189 (input terminal function selection)** to assign the function.

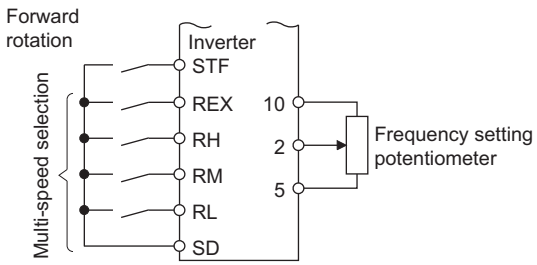

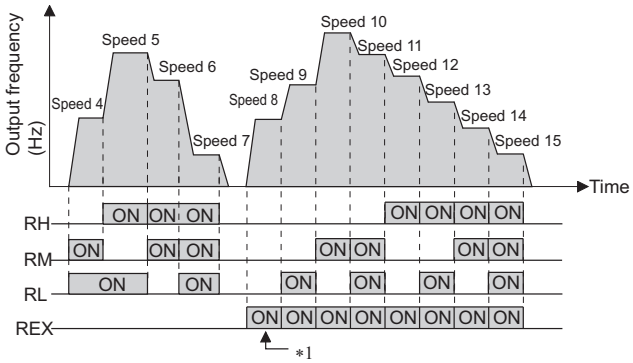

*1 When RH, RM and RL is set to OFF and REX is set to ON when "9999" is set to **Pr.232 Multi-speed setting (speed 8)**, the inverter runs by the frequency set to **Pr.6**.

(3) Input compensation of multi-speed setting (Pr.28)

- Speed (frequency) compensation can be applied for the multi-speed setting and the remote setting by inputting the frequency setting compensation signal (terminals 1, 2).

REMARKS

- The priority of the frequency commands by the external signals are "Jog operation > multi-speed operation > terminal 4 analog input > pulse train input > terminal 2 analog input". (For details on frequency commands by analog input, refer to page 400.)
- Valid in the External operation mode or PU/External combined operation mode (**Pr.79**= "3" or "4").
- Multi-speed parameters can also be set during PU operation or External operation.
- The **Pr.24 to Pr.27** and **Pr.232 to Pr.239** settings have no priority among them.
- When **Pr.59 Remote function selection** ≠ "0", the multi-speed setting is invalid since the RH, RM, and RL signals are for remote setting.
- When performing analog input compensation, set **Pr.28 Multi-speed input compensation selection** to "1".
- Select the terminals (terminals 1, 2) to use for compensation input voltage (0 to ± 5 V, 0 to ± 10 V) at **Pr.73 Analog input selection**.
- When using terminal 1 for compensation input, set **Pr.868 Terminal 1 function assignment** "0" (initial value).
- Changing the terminal assignment using **Pr.178 to Pr.189 (input terminal function selection)** may affect the other functions. Set parameters after confirming the function of each terminal.

上正科技有限公司
購買、維修 此手冊零組件
電話： 037-406339
Email: service@repairtw.com
Line id: @zzzz
www.repairtw.com

♦ Parameters referred to ♦

Pr.15 Jog frequency page 318
Pr.59 Remote function selection page 288
Pr.73 Analog input selection page 391
Pr.79 Operation mode selection page 299
Pr.178 to Pr.189 (input terminal function selection) page 416
Pr.868 Terminal 1 function assignment page 395

5.10 (H) Protective function parameter

Purpose	Parameter to set			Refer to page
To protect the motor from overheating	Electronic thermal O/L relay	P.H000, P.H010, P.H020	Pr.9, Pr.51, Pr.561	322
To set the overheat protection characteristics for the motor	Free thermal O/L relay setting	P.H001 to P.H005, P.H011 to P.H015	Pr.600 to Pr.604, Pr.692 to Pr.696	327
To decelerate and stop when the motor thermal protection is activated	Fault definition	P.H030	Pr.875	328
To extend the life of the cooling fan	Cooling fan operation selection	P.H100	Pr.244	329
To detect ground fault at start	Ground fault at start enable/disable	P.H101	Pr.249	330
To vary the operating level of the undervoltage protective function	Undervoltage level	P.H102	Pr.598	330
To initiate an inverter protective function	Fault initiation	P.H103	Pr.997	330
To disable the I/O phase loss protective function	I/O phase loss protection selection	P.H200, P.H201	Pr.251, Pr.872	331
To restart using the retry function when the protective function is activated	Retry operation	P.H300 to P.H303	Pr.65, Pr.67 to Pr.69	332
To set the upper and lower limits of the output frequency	Maximum/minimum frequency	P.H400 to P.H402	Pr.1, Pr.2, Pr.18	334
To prevent the motor from overspeeding under torque control	Speed limit	P.H410 to P.H412	Pr.807 to Pr.809	213
To avoid overdriving the motor during speed control	Overdriving prevention	P.H415 to P.H417	Pr.265, Pr.853, Pr.873	202
To operate by avoiding resonance points	Frequency jump	P.H420 to P.H425, P.H429	Pr.31 to Pr.36, Pr.552	335
To limit the output current so that the inverter protective function does not activate	Stall prevention	P.H500, P.H501, P.H600 to P.H603, P.H610, P.H611, P.H620, P.H621, P.H631, P.M430, P.T010, P.T040	Pr.22, Pr.23, Pr.48, Pr.49, Pr.66, Pr.114, Pr.115, Pr.148, Pr.149, Pr.154, Pr.156, Pr.157, Pr.858, Pr.868	336
To limit the torque during speed control	Torque limit	P.H500, P.H700 to P.H703, P.H710, P.H720, P.H721, P.H730, P.T010, P.T040, P.G210	Pr.22, Pr.803, Pr.810, Pr.812 to Pr.817, Pr.858, Pr.868, Pr.874	181
To shut off the output during acceleration	Overspeed detection level	P.H800	Pr.374	342
To shut off the output when deceleration is not possible	Deceleration check	P.H880	Pr.690	203

上正科技有限公司
購買、維修 此手冊零組件
電話： 037-466333
Email: service@repairtw.com
Line Id: @zzzz
www.repairtw.com

5.10.1 Motor overheat protection (electronic thermal O/L relay)

Set the current of the electronic thermal O/L relay function to protect the motor from overheating. Such settings will provide the optimum protective characteristic considering the low cooling capability of the motor during low-speed operation.

Pr.	Name	Initial value	Setting range	Description
9 **H000**	**Electronic thermal O/L relay**	Rated inverter current*1	0 to 500 A*2 0 to 3600 A*3	Set the rated motor current.
600 **H001**	**First free thermal reduction frequency 1**	9999	0 to 590 Hz 9999	The electronic thermal O/L relay operation level can be changed to match the motor temperature characteristics with the combination of these three points (**Pr.600, Pr.601**), (**Pr.602, Pr.603**), (**Pr.604, Pr.9**). 9999: Free thermal O/L relay invalid
601 **H002**	**First free thermal reduction ratio 1**	9999	1 to 100% 9999	
602 **H003**	**First free thermal reduction frequency 2**	9999	0 to 590 Hz 9999	
603 **H004**	**First free thermal reduction ratio 2**	9999	1 to 100% 9999	
604 **H005**	**First free thermal reduction frequency 3**	9999	0 to 590 Hz 9999	
51 **H010**	**Second electronic thermal O/L relay**	9999	0 to 500 A*2 0 to 3600 A*3 9999	Enabled when the RT signal is ON. Set the rated motor current. Second electronic thermal O/L relay invalid
692 **H011**	**Second free thermal reduction frequency 1**	9999	0 to 590 Hz 9999	The electronic thermal O/L relay operation level can be changed to match the second motor temperature characteristics with the combination of these three points (**Pr.692, Pr.693**), (**Pr.694, Pr.695**), (**Pr.696, Pr.51**). 9999: Second free thermal O/L relay invalid
693 **H012**	**Second free thermal reduction ratio 1**	9999	1 to 100% 9999	
694 **H013**	**Second free thermal reduction frequency 2**	9999	0 to 590 Hz 9999	
695 **H014**	**Second free thermal reduction ratio 2**	9999	1 to 100% 9999	
696 **H015**	**Second free thermal reduction frequency 3**	9999	0 to 590 Hz 9999	
561 **H020**	**PTC thermistor protection level**	9999	0.5 to 30 kΩ 9999	Set the PTC thermistor protection level (resistance). PTC thermistor protection disabled

*1 For FR-A820-00077(0.75K) or lower and FR-A840-00038(0.75K) or lower, the current is set to 85% of the rated current.

*2 The setting range for FR-A820-03160(55K) or lower and FR-A840-01800(55K) or lower. The minimum setting increment is "0.01 A".

*3 The setting range for FR-A820-03800(75K) or higher, and FR-A840-02160(75K) or higher. The minimum setting increment is "0.1 A".

上正科技有限公司
購買 維修 進口備零組件
電話： 037-486333
Email: service@repairtw.com
Line id: @zzz
www.repairtw.com

(1) Electronic thermal O/L relay operation characteristic for induction motor (Pr.9, E.THM)

- This function detects the overload (overheat) of the motor and trips the inverter by stopping the operation of the transistor at the inverter output side.
- Set the rated current (A) of the motor in **Pr.9**. (If the motor has both 50 Hz and 60 Hz ratings and the **Pr.3 Base frequency** is set to 60 Hz, set to 1.1 times the 60 Hz rated motor current.)
- Set "0" in **Pr.9** to avoid activating the electronic thermal O/L relay function; for example, when using an external thermal relay for the motor. (Note that the output transistor protection of the inverter is activated. (E.THT))
- When using the Mitsubishi constant-torque motor, set **Pr.71 Applied motor** = "1, 13 to 16, 50, 53, 54". (This will set a 100% continuous torque characteristic in the low-speed range.)

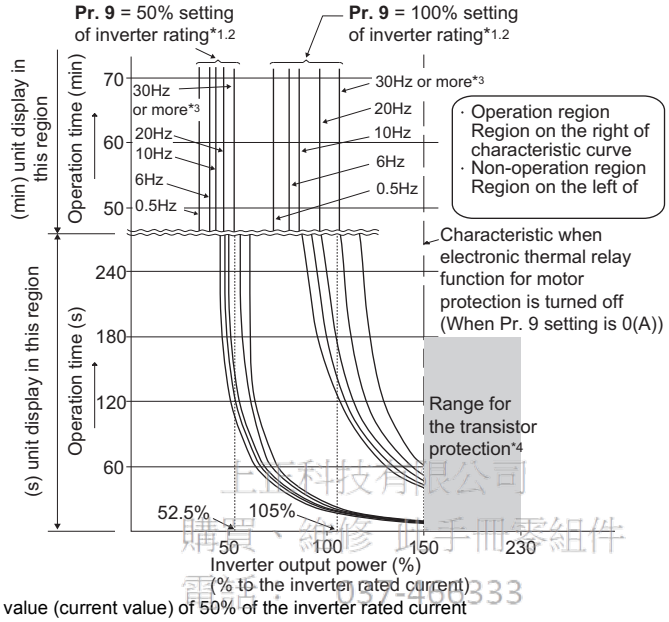

*1 When setting **Pr.9** to a value (current value) of 50% of the inverter rated current

*2 The % value denotes the percentage to the rated inverter current. It is not the percentage to the rated motor current.

*3 When the electronic thermal O/L relay of the Mitsubishi constant-torque motor is set, the characteristic curve is as shown in this diagram at 6 Hz or higher. (For selection of the operation characteristic , refer to page 424.)

*4 Transistor protection is activated depending on the temperature of the heatsink. The protection may be activated even with less than 150% depending on the operating conditions.

上海科技有限公司
購買、維修 此手冊零組件
電話： 037-466333
Email: service@repairtw.com
Line id: @zzzz
www.repairtw.com

REMARKS

- The internal accumulated heat value of the electronic thermal relay function is reset to the initial value by the inverter's power reset and reset signal input. Avoid unnecessary reset and power-OFF.
- Install an external thermal relay (OCR) between the inverter and motors to operate several motors, a multi-pole motor or a dedicated motor with one inverter. When setting an external thermal relay, note that the current indicated on the motor rating plate is affected by the line-to-line leakage current. (Refer to page 82.) The cooling effect of the motor drops during low-speed operation. Use a thermal protector or a motor with built-in thermistor.
- The protective characteristic of the electronic thermal O/L relay is degraded when there is a large difference in capacity between the inverter and motor, and when the set value is small. In such case, use an external thermal relay.
- A dedicated motor cannot be protected by an electronic thermal O/L relay. Use an external thermal relay.
- Set **Pr.9** = "0" for vector-control-dedicated motors (SF-V5RU) because they are equipped with thermal protectors.
- If the electronic thermal O/L relay is set to 3% or lower of the rated inverter current, the electronic thermal O/L relay may not operate.
- The transistor protection thermal O/L relay is activated early when the **Pr.72 PWM frequency selection** setting is increased.

(H) Protective function parameter

(2) Electronic thermal O/L relay when using IPM motor (Pr.9, E.THM)

- This function detects the overload (overheat) of the motor and trips the inverter by stopping the operation of the transistor at the inverter output side. (The operation characteristic is shown below.)
- Set the rated current (A) of the motor in **Pr.9**. Performing IPM parameter initialization automatically sets the rated current of the IPM motor. (Refer to **page 171**.)
- Set "0" in **Pr.9** to avoid activating the electronic thermal O/L relay function; for example, when using an external thermal relay for the motor.
  (Note that the output transistor protection of the inverter is activated. (E.THT))

• MM-CF

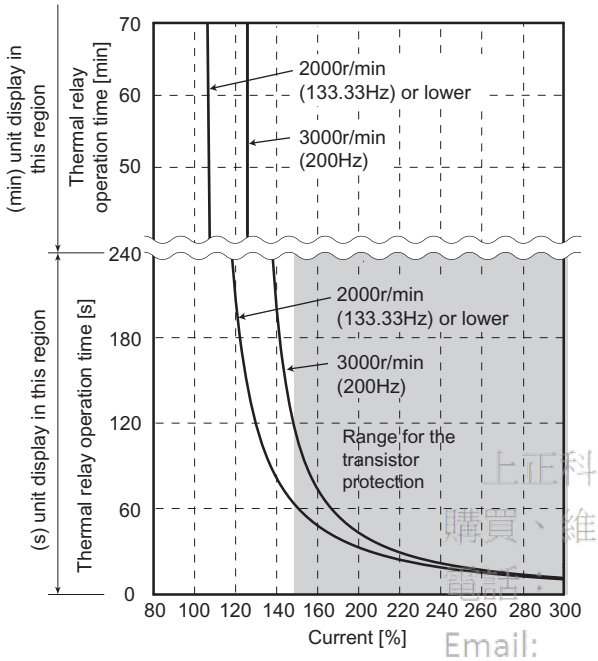

∗ The % value denotes the percentage to the rated motor current.

- Protective function activated area: the area right of the characteristic curve
- Normal operation area: the area left of the characteristic curve

上正科技有限公司
購買、維修 此手冊零組件
037-466333
Email: service@repairtw.com
www.repairtw.com

REMARKS

- The internal accumulated heat value of the electronic thermal relay function is reset to the initial value by the inverter's power reset and reset signal input. Avoid unnecessary reset and power-OFF.
- When using a PM motor other than MM-CF, set the free thermal parameters (**Pr.600** to **Pr.604)** in accordance with the motor characteristic.
- The transistor protection thermal O/L relay is activated early when the **Pr.72 PWM frequency selection** setting is increased.

(3) Set two types of electronic thermal O/L relays (Pr.51)

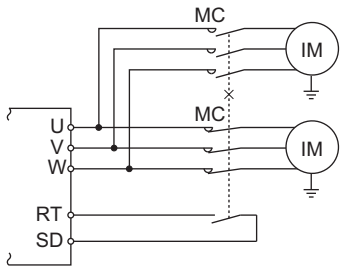

- These settings are used when rotating two motors with different rated current separately by a single inverter. (When rotating two motors together, use an external thermal relay.)
- Set the rated motor current for the second motor in **Pr.51**.
- When the RT signal is ON, thermal protection is provided based on the **Pr.51** setting.

Pr.450 Second applied motor	Pr.9 Electronic thermal O/L relay	Pr.51 Second electronic thermal O/L relay	RT-OFF		RT-ON	
			No.1 Motor	No.2 Motor	No.1 motor	No.2 motor
9999	0	9999	×	×	×	×
		0	×	×	×	×
		0.01 to 500 (0.1 to 3600)	×	Δ	×	O
9999	Other than 0	9999	O	×	O	×
		0	O	×	Δ	×
		0.01 to 500(0.1 to 3600)	O	Δ	Δ	O
Other than 9999	0	9999	×	×	×	×
		0	×	×	×	×
		0.01 to 500(0.1 to 3600)	×	Δ	×	O
Other than 9999	Other than 0	9999	O	Δ	Δ	O
		0	O	×	Δ	×
		0.01 to 500(0.1 to 3600)	O	Δ	Δ	O

O: Values are accumulated by using the output current.
Δ: Values are accumulated by assuming the output current is "0 A" (cooling processing).
×: Electronic thermal O/L relay does not operate.

上正科技有限公司
購買、維修 此手冊零組件
電話： 037-466333
Email: service@repairtw.com
Line id: @zzzz
www.repairtw.com

REMARKS

- The RT signal is a second function selection signal. The RT signal also enables other second functions. (Refer to page 420.)
- The RT signal is assigned to the terminal RT in the initial setting. Set "3" in any of **Pr.178 to Pr.189** (input terminal function selection),to assign the RT signal to another terminal.

(4) Electronic thermal O/L relay pre-alarm (TH) and warning signal (THP signal)

- If the accumulated electronic thermal value reaches 85% of the **Pr.9** or **Pr.51** setting, electronic thermal O/L relay function pre-alarm (TH) is displayed and the electronic thermal O/L relay pre-alarm (THP) signal is output. If the value reaches 100% of the Pr.9 setting, the motor thermal protection (E.THM/E.THT) is activated to shut off the inverter output. The inverter output is not shut off with the TH display.
- The inverter output is not shut off with the warning signal (THP).
- For the terminal used for THP signal output, set "8 (positive logic)" or "108 (negative logic)" in any of **Pr.190 to Pr.196 (output terminal function selection)** to assign the function.

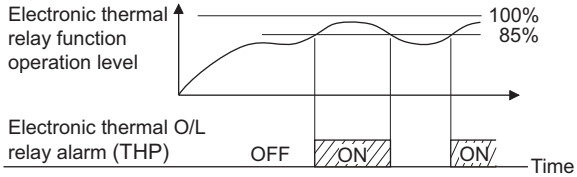

- 100%: Electronic thermal O/L relay activation value

REMARKS

- Changing the terminal assignment using **Pr.190 to Pr.196 (output terminal function selection)** may affect the other functions. Set parameters after confirming the function of each terminal.

(5) External thermal relay input (OH signal, E.OHT)

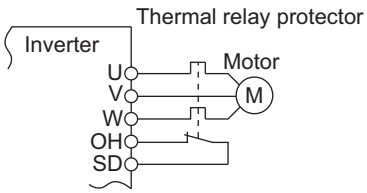

External thermal relay input connection diagram

- The external thermal relay input (OH) signal is used when using an external thermal relay or a thermal protector built into the motor to protect the motor from overheating.
- When the thermal relay function is activated, the external thermal operation (E.OHT) shuts off the inverter output.
- For the terminal used for the OH signal input, set "7" in any of **Pr.178 to Pr.189 (input terminal function selection)** to assign the function.
- Vector-control-dedicated motors (SF-V5RU) are equipped with thermal protectors.

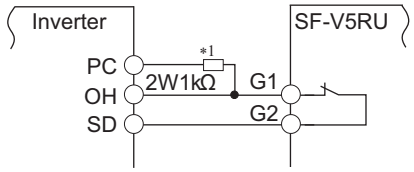

Connecting the SF-V5RU thermal protector

*1 Connect the recommended 2W1kΩ resistor between the terminal PC and OH. (Refer to page 65)

REMARKS

- Changing the terminal assignment using **Pr.178 to Pr.189 (input terminal function selection)** may affect the other functions. Set parameters after confirming the function of each terminal.

上正科技有限公司
購買、維修 此手冊零組件
電話： 037-466333
Email: service@repairtw.com
Line id: @zzzz
www.repairtw.com

(6) PTC thermistor input (Pr.561, E.PTC)

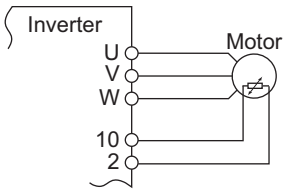

PTC thermistor input connection diagram

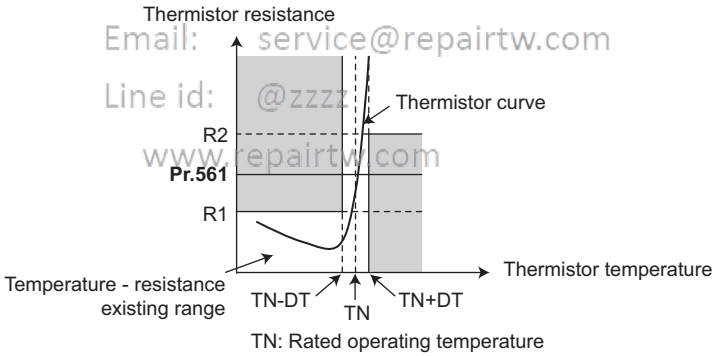

Example of PTC thermistor characteristics

- Output from the PTC thermistor, which is built into the motor, can be input to the terminals 2 and 10. If the input from the PTC thermistor reaches the resistor value set in **Pr.561 PTC thermistor protection level**, the PTC thermistor operation (E.PTC) shuts off the inverter output.
- Confirm the characteristic of the PTC thermistor to be used, and set the resistance for **Pr.561** around the center of the R1 and R2 values shown on the figure above so that it does not deviate from the protective function activating temperature TN. If the **Pr.561** setting becomes too close to R1 or R2, the protective function activating temperature may be too hot (protection is delayed), or too cold (too much protection).
- When the PTC thermistor protection is enabled (**Pr.561** ≠ "9999"), the resistance value for the PTC thermistor can be displayed on the operation panel (FR-DU08), parameter unit (FR-PU07) or via RS-485 communication. (Refer to page 346.)

REMARKS

- When using terminal 2 for PTC thermistor input (**Pr.561** ≠ "9999"), the terminal 2 will not operate as an analog frequency command terminal. The PID and dancer control functions assigned to the terminal 2 will be also disabled. Use **Pr.133 PID action set point** to set the set point for the PID function.
- To input power to the PTC thermistor power supply, always use the terminal 10. Do not use any other terminals or an external power supply Otherwise, the PTC thermistor protection (E.PTC) does not operate properly.
- When E.PTC is activated, the alarm display, "External protection (AU terminal)", may appear on the parameter unit (FR-PU07), but it is not a fault.

(7) Overheat protection to match the characteristic of the motor (Pr.600 to Pr.604, Pr.692 to Pr.696)

- The activation level of the electronic thermal O/L relay can be varied to match the motor temperature characteristic.
- The electronic thermal O/L relay's activation level can be set using the combination of three points (**Pr.600, Pr.601**), (**Pr.602, Pr.603**), (**Pr.604, Pr.9**). Two or more points are required for setting.
- The electronic thermal O/L relay's activation level can be set to using the combination of three points (**Pr.692, Pr.693**), (**Pr.694, Pr.695**), (**Pr.696, Pr.51**) when the RT signal is ON.

Continuous operation characteristic

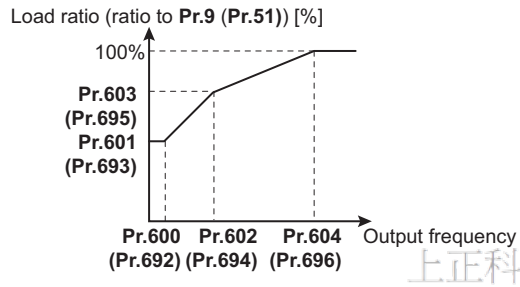

上正科技有限公司
購買、維修 此手冊零組件
電話： 037 466233
Email: service@repairtw.com
Line id: @zzzz
www.repairtw.com

Setting example 1

Pr.9=100% of the rated motor current
Pr.600=6Hz
Pr.601=50%
Pr.602=30Hz
Pr.603=70%
Pr.604=60Hz

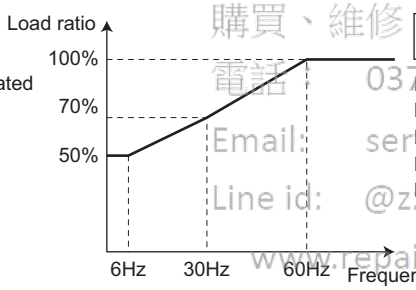

Setting example 2

Pr.600=120Hz
Pr.601=60%
Pr.602=3Hz
Pr.603=50%
Pr.604=60Hz

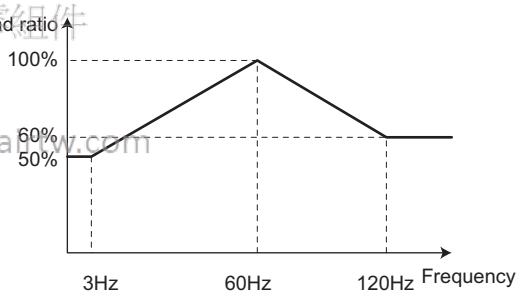

- When setting **Pr.600**, **Pr.602**, **Pr.604** (**Pr.692, Pr.694, Pr.696**) to the same frequency, the following graph's upper level will be applied.

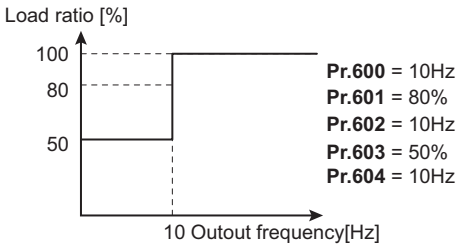

Pr.600 = 10Hz
Pr.601 = 80%
Pr.602 = 10Hz
Pr.603 = 50%
Pr.604 = 10Hz

REMARKS

- Make sure to set the parameters according to the motor temperature characteristic used.

♦ Parameters referred to ♦

Pr.71 Applied motor ☞page 424

Pr.72 PWM frequency selection ☞page 270

Pr.178 to Pr.189 (input terminal function selection) ☞page 416

Pr.190 to Pr.196 (output terminal function selection) ☞page 370

5.10.2 Fault definition

Fault output can be done after deceleration stop when motor thermal protection is activated

Pr.	Name	Initial value	Setting range	Description
875 H030	Fault definition	0	0	Normal operation
			1	Decelerates to stop at activation of motor thermal protection.

(1) Output shutoff at activation of any protective function (Pr.875 = "0" initial value)

- At activation of a protective function, output is shutoff, and the alarm output 2 signal (ER) and the fault signal (ALM) are output.

(2) Deceleration stop at motor thermal protection activation (Pr.875 = "1")

- At activation of the external thermal relay (E.OHT), motor load (electronic thermal O/L relay) (E.THM) and PTC thermistor (E.PTC) protective functions, the alarm output 2 (ER) signal is displayed, and the motor decelerates to stop. After it stops, a fault signal (ALM) is output.
- When the ER signal comes ON, reduce the load or take other measures to allow the inverter to decelerate.
- During fault occurrence aside from the E.OHT, E.THM and E.PTC, the output is immediately shut off, and the fault signal (ALM) is output.
- To use the ER signal, set "97 (positive logic)" or "197 (negative logic)" in any of **Pr.190 to Pr.196 (output terminal function selection)** to assign the function to the output terminal.

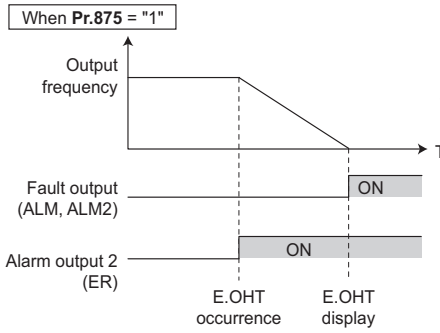

上正科技有限公司
購買、維修 此手冊零組件
電話： 037-466333
Email: service@repairtw.com
Line id: @zzzz
www.repairtw.com

REMARKS

- Regardless of the **Pr.875** setting, when the protective function is operating during position control, output is immediately shut off. (No deceleration stop)
- For systems with a large load-side torque that prevents deceleration, setting value "0" is recommended.
- **Changing the terminal assignment using Pr.190 to Pr.196 (output terminal function selection)** may affect the other functions. Set parameters after confirming the function of each terminal.

♦ Parameters referred to ♦

Pr.190 to Pr.196 (output terminal function selection) ☞page 370

5.10.3 Cooling fan operation selection

A cooling fan is built into the inverter and its operation can be controlled.

Pr.	Name	Initial value	Setting range	Description
244 H100	Cooling fan operation selection	1	0	A cooling fan operates at power ON. Cooling fan ON/OFF control is invalid. (The cooling fan is always ON at power ON)
			1	Cooling fan ON/OFF control is valid. The fan is always ON while the inverter is running. During a stop, the inverter status is monitored and the fan switches ON/OFF according to the temperature.
			101 to 105	Cooling fan ON/OFF control is valid. Set the cooling fan stop waiting time within 1 to 5 s.

(1) Cooling fan always ON (Pr.244 = "0")

- When **Pr.244** = "0", the cooling fan operates at power ON. If the fan stops at this time, fan operation is regarded as faulty, Fan alarm FN [FN] is displayed on the operation panel, and the fan fault (FAN) and alarm (LF) signals are output.
- For the terminal used for the FAN signal output, set "25 (positive logic)" or "125 (negative logic)" in any of **Pr.190 to Pr.196 (output terminal function selection)**. For the LF signal, set "98 (positive logic)" or "198 (negative logic)".

(2) Cooling fan operation control (Pr.244 = "1" (initial value), "101 to 105")

- The cooling fan operation is controlled when **Pr.244** = "1". When the inverter is running, the cooling fan operates; and when it is stopped, the cooling fan operates according to the temperature of the inverter heatsink. If the fan stops although it meets the conditions for running, fan operation is regarded as faulty, [FN] is displayed on the operation panel, and the fan signal and LF signals are output.
- To prevent the cooling fan from turning ON and OFF repeatedly during frequent starts/stops (inching), the cooling fan stop waiting time can be set. The waiting time when **Pr.244** = "101 to 105" is **Pr.244**-100 (or 1 s, if the **Pr.244** = "101").

上正科技有限公司
購買、維修 此手冊零組件
電話： 037-460333
Email: service@repairtw.com
Line id: @zzzz
www.repairtw.com

(3) Cooling fan operation command signal (Y206 signal)

- The cooling fan operation command signal (Y206 signal) can be output when the inverter cooling fan meets the conditions for running. The function can be used when the fan installed on the enclosure is synchronized with the inverter cooling fan.
- Y206 signal indicates the operating command condition of the inverter cooling fan depending on the power supply ON/OFF or the **Pr.244** settings. The signal does not indicate the actual operation of the cooling fan. (The signal is output even if the cooling fan is stopped due to a fault.)
- To use the Y206 signal, set "206 (positive logic) or 306 (negative logic)" in one of **Pr.190 to Pr.196 (output terminal function selection)** to assign function to an output terminal.

REMARKS

- The cooling fan is installed on the FR-A820-00105(1.5K) or higher and FR-A840-00083(2.2K) or higher.
- Changing the terminal assignment using **Pr.190 to Pr.196 (output terminal function selection)** may affect the other functions. Set parameters after confirming the function of each terminal.

♦ Parameters referred to ♦

Pr.190 to Pr.196 (output terminal function selection) ☞ page 370

5.10.4 Earth (ground) fault detection at start V/F Magnetic flux

Select whether to enable/disable earth (ground) fault detection at start. When enabled, earth (ground) fault detection is performed immediately after a start signal input to the inverter.

Pr.	Name	Initial value	Setting range	Description
249 H101	Earth (ground) fault detection at start	0	0	Without the earth (ground) fault detection at start
			1	With the earth (ground) fault detection at start

- If a ground fault is detected at start while **Pr.249** = "1", the output-side earth (ground) fault overcurrent (E.GF) is displayed and the outputs are shut off. (Refer to page 635)
- The **Pr.249** setting is enabled during V/F control and Advanced magnetic flux vector control
- When the **Pr.72 PWM frequency selection** selection setting is high, enable the ground fault detection at start.

REMARKS

- Because of the detection performed at start, the output is delayed by approximately 20 ms at every start.
- Use **Pr.249** to enable/disable ground fault detection at operation start. Ground faults are detected always during operation regardless of the **Pr.249** setting.
- If a smaller-capacity motor is used with the FR-A820-00340(5.5K) or higher and FR-A840-00170(5.5K) or higher, ground fault protection may be insufficient.

5.10.5 Varying the activation level of the undervoltage protective function

If the undervoltage protection (E.UVT) activates due to unstable voltage in the power supply, the undervoltage level (DC bus voltage value) can be changed. (only available for 400 V class)

FR科技有限公司
購買、維修 此手冊零組件
電話：
Email: service@repairtw.com
Line id:
www.repairtw.com

Pr.	Name	Initial value	Setting range	Description
598 H102	Undervoltage level	9999	350 to 430 VDC	Set the DC voltage value at which E.UVT occurs.
			9999	E.UVT occurs at 430 VDC

REMARKS

- Do not use this function when switching to an external battery, since the inrush current when power is restored increases, as the undervoltage level is decreased.
- The **Pr.598** settings are only valid for 400 V class inverters.
- The **Pr.598** setting is disabled during PM sensorless vector control. The **Pr.598** setting is also invalid during PM sensorless vector control for the first or second functions.

5.10.6 Initiating a protective function

A fault (protective function) is initiated by setting the parameter.
This function can be used to check how the system operates at activation of a protective function.

Pr.	Name	Initial value	Setting range	Description
997 H103	Fault initiation	9999	16 to 253	The setting range is same with the one for fault data codes of the inverter (which can be read through communication). Written data is not stored in EEPROM.
			9999	The read value is always "9999". With this setting, the protective function does not activate.

- To initiate a fault (protective function), set the assigned number of the protective function you want to initiate in **Pr.997**.
- The value set in **Pr.997** is not stored in EEPROM.
- When a protective function activates, the inverter trips, a fault is displayed, and a fault signal (ALM, ALM2) is output.
- The latest fault in the faults history is displayed while the fault initiation function is in operation. After a reset, the faults history goes back to the previous status. (The protective function generated by the fault is not saved in the faults history.)
- Perform inverter reset to cancel the protective function.
- For the selectable parameter by **Pr.997** and the corresponding protective functions, refer to page 623.

REMARKS

- If a protective function is already operating, no fault can be activated by **Pr.997**.
- The retry function is disabled when a protective function has been initiated by the fault initiation function.
- If a fault occurs after a protective function has been activated, the protective function indication does not change. The fault is not saved in the faults history either.

5.10.7 I/O phase loss protection selection

The output phase loss protection function, which stops the inverter output if one of the three phases (U, V, W) on the inverter's output side (load side) is lost, can be disabled.
The input phase loss protective function on the inverter input side (R/L1, S/L2, T/L3) can be enabled.

Pr.	Name	Initial value	Setting range	Description
251 H200	**Output phase loss protection selection**	1	0	Without output phase loss protection
			1	With output phase loss protection
872 H201	**Input phase loss protection selection**	0	0	Without input phase loss protection
			1	With input phase loss protection

(1) Output phase loss protection selection (Pr.251)

- When **Pr.251** = "0", output phase loss (E.LF) protection is disabled.

(2) Input phase loss protection selection (Pr.872)

- When **Pr. 872** = "1", input phase loss (E.ILF) protection will be activated if one of three phases is detected to be lost for 1 s continuously.

上元科技有限公司
購買、維修 此手冊零組件
電話： 037-466333
Email: service@repairtw.com
Line id: @2222
www.repairtw.com

REMARKS

- When several motors are connected, output phase loss cannot be detected even if the wiring to one motor loses phase.
- If an input phase is lost while **Pr.872** = "1" (with input phase loss protection), **Pr.261 Power failure stop selection** ≠ "0" (power failure stop function enabled), the motor decelerates to stop without outputting E.ILF.
- In the case of R/L1, S/L2 phase loss, the input phase loss protection will not operate, and the inverter will trip.
- If an input phase loss continues for a long time, the converter section and capacitor lives of the inverter will be shorter.

♦ Parameters referred to ♦

Pr.261 Power failure stop selection ☞ page 523

5.10.8 Retry function

This function allows the inverter to reset itself and restart at activation of the protective function (fault indication). The retry generating protective functions can be also selected.
When the automatic restart after instantaneous power failure function is selected (**Pr.57 Restart coasting time** ≠ 9999), the restart operation is also performed after a retry operation as well as after an instantaneous power failure. (Refer to page 511 and page 517 for the restart operation.)

Pr.	Name	Initial value	Setting range	Description
65 H300	**Retry selection**	0	0 to 5	A retry-making fault can be selected. (Refer to the table **on the next page**.)
67 H301	**Number of retries at fault occurrence**	0	0	No retry function
			1 to 10	Set the number of retries at a fault occurrence. A fault output is not provided during the retry operation.
			101 to 110	Set the number of retries at a fault occurrence. (The setting value minus 100 is the number of retries.) A fault output is provided during the retry operation.
68 H302	**Retry waiting time**	1 s	0.1 to 600 s	Set the waiting time from a fault occurrence to a retry.
69 H303	**Retry count display erase**	0	0	Clears the number of successful restarts made by retries.

(1) Setting the retry function (Pr.67, Pr.68)

- When the inverter protective function is operating (fault indication), the retry function automatically cancels (resets) the protective function after the time set in **Pr.68**. The retry function then restarts the operation from the starting frequency.
- Retry operation is enabled when **Pr.67** ≠ "0". For **Pr.67**, set the number of retries at activation of the protective function.

上正科技有限公司
購買、維修 此手冊零組件
電話： 037-466533
Email: service@repairtw.com
Line id: @zzzz
www.repairtw.com

Pr.67 setting	Fault output during retry operation	Retry count
0	—	No retry function
1 to 10	Not provided	1 to 10 times
101 to 110	Provided	1 to 10 times

- When retries fail consecutively more than the number of times set in **Pr.67**, a retry count excess (E.RET) occurs, resulting in an inverter retries. (Refer to the retry failure example.)
- Use **Pr.68** to set the waiting time from a protective function activation to a retry in the range of 0.1 to 600 s.
- During retry operation, the during retry (Y64) signal is ON. For the Y64 signal, set "64 (positive operation)" or "164 (negative operation)" in any of **Pr.190** to **Pr.196** (output terminal function selection) to assign the function.

(2) Retry count check (Pr.69)

- Reading the **Pr.69** value provides the cumulative number of successful restart times made by retries. The cumulative count in **Pr.69** increases by 1 when a retry is successful. Retry is regarded as successful when normal operation continues without a fault for the **Pr.68** setting multiplied by four or longer (3.1 s at the shortest). (When retry is successful, the cumulative number of retry failures is cleared.)
- Writing "0" in **Pr.69** clears the cumulative count.

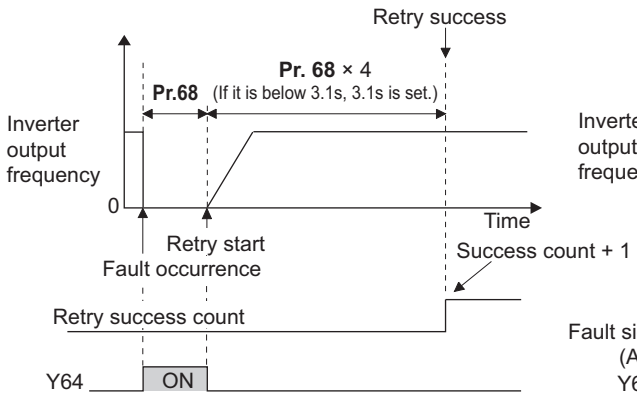

Retry success example

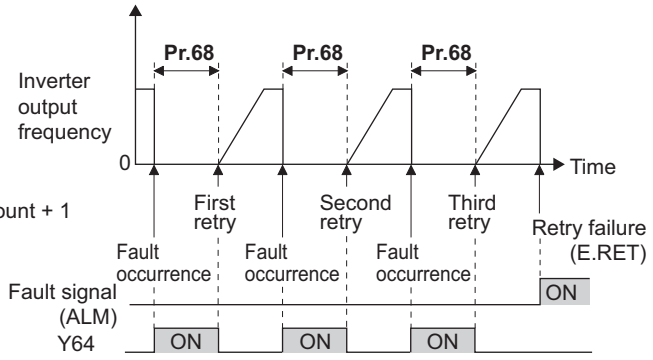

Retry failure example

(3) Selecting retry generating faults (Pr.65)

• Using **Pr.65**, you can select the fault that will cause a retry. No retry will be made for the fault not indicated. (For the fault details, refer to page 623.) ● indicates the faults selected for retry.

Retry-making fault	Pr.65 setting					
	0	1	2	3	4	5
E.OC1	●	●		●	●	●
E.OC2	●	●		●	●	
E.OC3	●	●		●	●	●
E.OV1	●		●	●	●	
E.OV2	●		●	●	●	
E.OV3	●		●	●	●	
E.THM	●					
E.THT	●					
E.IPF	●				●	
E.UVT	●				●	
E. BE	●				●	
E. GF	●				●	
E.OHT	●					
E.OLT	●				●	
E.OPT	●				●	
E.OP1	●				●	
E. PE	●				●	
E.MB1	●				●	

Retry-making fault	Pr.65 setting					
	0	1	2	3	4	5
E.MB2	●				●	
E.MB3	●				●	
E.MB4	●				●	
E.MB5	●				●	
E.MB6	●				●	
E.MB7	●				●	
E.OS	●				●	
E.OSD	●				●	
E.PTC	●					
E.CDO	●				●	
E.SER	●				●	
E.USB	●				●	
E.ILF	●				●	
E.PID	●				●	
E.PCH	●				●	
E.SOT	●	●		●	●	●
E.LCI	●				●	

REMARKS

- Use the retry function only when the operation can be resumed after resetting a protective function activation. Making a retry against the protective function, which is activated by an unknown condition, will lead the inverter and motor to be faulty. Identify what condition the protective function was activated, and eliminate such condition before resuming the operation.
- If the retry function operates during PU operations, the operating conditions (forward/reverse rotation) are stored; and operations resume after retry reset.
- Only the fault details for the first fault that occurred are stored in the faults history.
- The reset by the retry function does not clear the accumulated data of the electronic thermal O/L relay, regenerative brake duty, etc. (This is different from power supply reset or reset by RES signal.)
- When the parameter storage device fault (E.PE) is occurring and reading of the retry-function-related parameters is not possible, retry cannot operated.
- Changing the terminal assignment using **Pr.190 to Pr.196 (output terminal function selection)** may affect the other functions. Set parameters after confirming the function of each terminal.

上亞科技有限公司
購買、維修此手冊零組件
電話： 037-466333
Email: service@repairtw.com
Line Id: @zzzz
www.repairtw.com

⚠ Caution

⚠ When the retry function is set enabled, stay away from the motor and machine in the case of an inverter trip. The motor and machine will start suddenly (after the reset time has elapsed) after the inverter trip. When the retry function is set enabled, apply in easily visible places the CAUTION stickers supplied to this product.

♦ Parameters referred to ♦

Pr.57 Restart coasting time ☞ page 511, page 517

5.10.9 Limiting the output frequency (maximum/ minimum frequency)

Motor speed can be limited. Clamp the output frequency at the upper and lower limits.

Pr.	Name	Initial value	Setting range	Description
1 H400	Maximum frequency	120 Hz*1 60 Hz*2	0 to 120 Hz	Set the upper limit of the output frequency.
2 H401	Minimum frequency	0 Hz	0 to 120 Hz	Set the lower limit of the output frequency.
18 H402	High speed maximum frequency	120 Hz*1 60 Hz*2	0 to 590 Hz	Set when operating at 120 Hz or higher.

*1 For the FR-A820-03160(55K)or lower and FR-A840-01800(55K) or lower.
*2 For the FR-A820-03800(75K)or higher and FR-A840-02160(75K) or higher.

(1) Setting the maximum frequency (Pr.1, Pr.18)

- Set **Pr.1 Maximum frequency** to the upper limit of the output frequency. If the value of the frequency command entered is higher than the setting, the output frequency is clamped at the maximum frequency.
- To operate at a frequency higher than the 120 Hz, adjust the upper output frequency limit with **Pr.18 High speed maximum frequency**. (When setting a frequency in **Pr.18**, the **Pr.1** setting automatically changes to the frequency set in **Pr.18**. Also, when setting a frequency in **Pr.1**, the **Pr.18** setting automatically changes to the frequency set in **Pr.1**.)

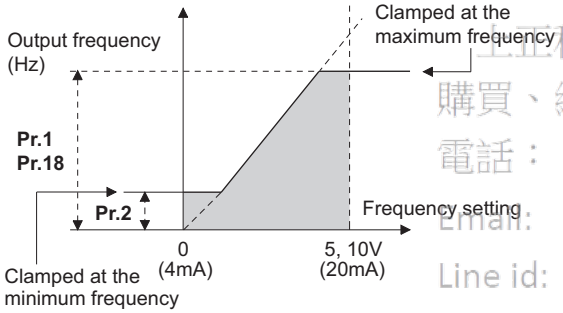

上亞科技有限公司
購買、維修 此手冊零組件
電話： 037-466333
Email: service@repairtw.com
Line id: @zzzz
www.repairtw.com

(2) Setting the minimum frequency (Pr.2)

- Set **Pr.2 Minimum frequency** to the lower limit of the output frequency.
- If the set frequency is **Pr.2** or less, the output frequency is clamped at **Pr.2** (will not fall below **Pr.2**).

REMARKS

- To operate with a frequency higher than 60 Hz using frequency-setting analog signals, change the **Pr.125 (Pr.126) (frequency setting gain) setting.** Simply changing the **Pr.1 and Pr.18** settings does not enable operation at a frequency higher than 60 Hz.
- During Real sensorless vector control, vector control, and PM sensorless vector control, the upper and lower limits are for the commanded frequency.
- When **Pr.15 Jog frequency** setting is equal to or less than **Pr.2** setting, the **Pr.15** setting has precedence over the **Pr.2** setting.
- When stall prevention is activated to decrease the output frequency, the output frequency may drop to **Pr.2** or below.
- If a jump frequency that exceeds **Pr.1(Pr.18) Maximum frequency** is set for the 3-point jump, the maximum frequency setting is the set frequency. If the set frequency is less than the jump frequency **Pr.2 Minimum frequency**, the jump frequency is the set frequency. (The set frequency can be equal to or lower than the frequency lower limit.)

⚠ Caution

⚠ When Pr.13 Starting frequency is set to a value equal to or greater than Pr.2, simply turning ON the start signal will run the motor at the preset speed in the preset acceleration time even if the frequency command frequency is not given. Take caution with this operation.

♦ Parameters referred to ♦

Pr.13 Starting frequency ☞page 291, page 292
Pr.15 Jog frequency ☞page 318
Pr.125 Terminal 2 frequency setting gain frequency, Pr.126 Terminal 4 frequency setting gain frequency ☞page 400

5.10.10 Avoiding the mechanical resonance points (frequency jump)

When it is desired to avoid resonance attributable to the natural frequency of a mechanical system, these parameters allow resonant frequencies to be jumped.

Pr.	Name	Initial value	Setting range	Description
31 H420	Frequency jump 1A	9999	0 to 590 Hz, 9999	1A to 1B, 2A to 2B, 3A to 3B are frequency jumps. (3-point jump) 9999: Function disabled
32 H421	Frequency jump 1B			
33 H422	Frequency jump 2A			
34 H423	Frequency jump 2B			
35 H424	Frequency jump 3A			
36 H425	Frequency jump 3B			
552 H429	Frequency jump range	9999	0 to3 (0 Hz)	Set the jump range for the frequency jumps (6-point jump).
			9999	3-point jump

(1) 3-point frequency jump (Pr.31 to Pr.36)

上正科技有限公司
購買、維修 此手冊零組件
電話： 037-466333
Email: service@repairtw.com
Line id: @zzz
www.repairtw.com

- Up to three areas may be set, with the jump frequencies set to either the top or bottom point of each area.
- The settings of frequency jumps 1A, 2A, 3A are jump points, and operation is performed at these frequencies in the jump areas.

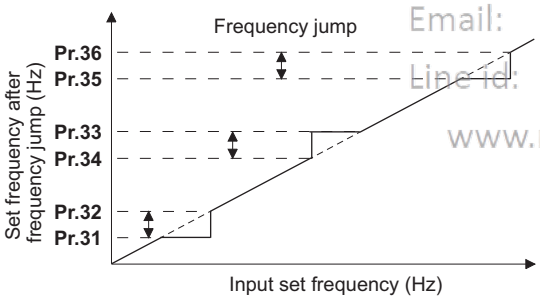

- [Example 1] To fix the frequency to 30 Hz in the range of 30 Hz to 35 Hz, set 35 Hz in **Pr.34** and 30 Hz in **Pr.33**.

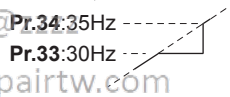

- [Example 2] To jump the frequency to 35 Hz in the range of 30 Hz to 35 Hz, set 35 Hz in **Pr.33** and 30 Hz in **Pr.34**.

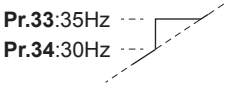

(2) 6-point frequency jump (Pr.552)

- A total of six jump areas can be set by setting the common jump range for the frequencies set in **Pr.31 to Pr.36**.
- When frequency jump ranges overlap, the lower limit of the lower jump range and the upper limit of the upper jump range are used.
- When the set frequency decreases and falls within the jump range, the upper limit of the jump range is the set frequency. When the set frequency increases and falls within the jump range, the lower limit of the jump range is the set frequency.

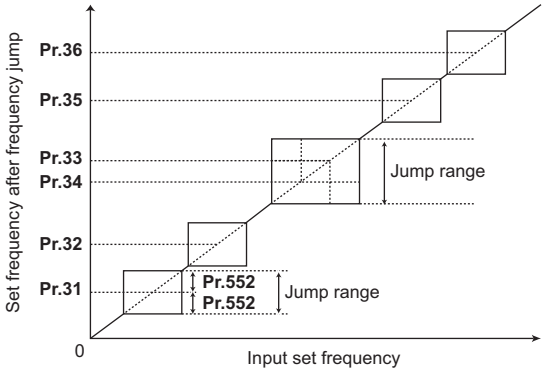

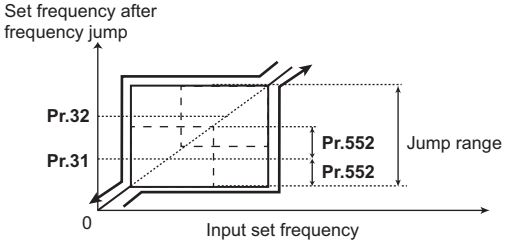

REMARKS

- During acceleration/deceleration, the running frequency within the set area is valid.
- If the setting ranges of individual groups (1A and 1B, 2A and 2B, 3A and 3B) overlap, write disable error (Er1) will occur.
- Setting **Pr.552** = "0" disables frequency jumps.
- If a jump frequency that exceeds **Pr.1(Pr.18) Maximum frequency** is set for the 3-point jump, the maximum frequency setting is the set frequency. If the set frequency is less than the jump frequency **Pr.2 Minimum frequency**, the jump frequency is the set frequency. (The set frequency can be equal to or lower than the frequency lower limit.)

  Example with 6-point frequency jump

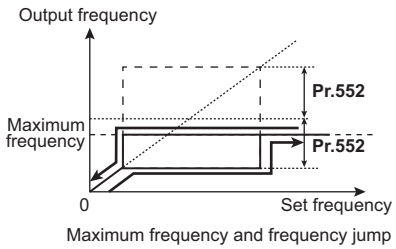

Maximum frequency and frequency jump

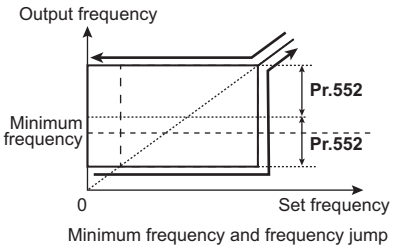

Minimum frequency and frequency jump

♦ Parameters referred to ♦

Pr.1 Maximum frequency, Pr.18 High speed maximum frequency, Pr.2 Minimum frequency ☞ page 334

5.10.11 Stall prevention operation

V/F Magnetic flux

This function monitors the output current and automatically changes the output frequency to prevent the inverter from tripping due to overcurrent, overvoltage, etc. It can also limit the stall prevention and fast-response current limit operation during acceleration/deceleration and power/regenerative driving.
This function is disabled during Real sensorless vector control, vector control and PM sensorless vector control.

- Stall prevention
  If the output current exceeds the stall prevention operation level, the output frequency of the inverter is automatically changed to reduce the output current.
  Also the second stall prevention function can limit the output frequency range in which the stall prevention function is enabled.
- Fast-response current limit
  If the current exceeds the limit value, the output of the inverter is shut off to prevent an overcurrent.

上准科技有限公司
購買、維修 此手冊零組件
電話： 037-466333
Email: service@repairtw.com
Line id: @zzz
www.repairtw.com

Pr.	Name	Initial value FM	Initial value CA	Setting range	Description
22 H500	Stall prevention operation level	150%		0	Stall prevention operation disabled.
				0.1 to 400% *1	Set the current limit at which the stall prevention operation will start.
156 H501	Stall prevention operation selection	0		0 to 31, 100 to 101	Enable/disable the stall prevention operation and the fast-response current limit operation.
48 H600	Second stall prevention operation level	150%		0	Second stall prevention operation disabled.
				0.1 to 400% *1	The stall prevention operation level can be changed using the RT signal.
49 H601	Second stall prevention operation frequency	0 Hz		0	Second stall prevention operation disabled.
				0.01 to 590 Hz	Set the frequency at which the **Pr.48** stall prevention operation will start.
				9999	**Pr.48** is enabled when RT signal is ON.
114 H602	Third stall prevention operation level	150%		0	Third stall prevention operation disabled.
				0.1 to 400% *1	The stall prevention operation level can be changed using the X9 signal.
115 H603	Third stall prevention operation frequency	0 Hz		0	Third stall prevention operation disabled.
				0.01 to 590 Hz	Set the frequency at which the stall prevention operation will start when the X9 signal turns ON.
23 H610	Stall prevention operation level compensation factor at double speed	9999		0 to 200%	The stall operation level when running at high speeds above the rated frequency can be reduced.
				9999	Always **Pr.22**.
66 H611	Stall prevention operation reduction starting frequency	60 Hz	50 Hz	0 to 590 Hz	Set the frequency at which the stall operation level reduction will start.

Pr.	Name	Initial value FM	Initial value CA	Setting range	Description	
148 H620	Stall prevention level at 0 V input	150%		0 to 400% *1	The stall prevention operation level can be changed by the analog signal input to the terminal 1 (terminal 4).	
149 H621	Stall prevention level at 10 V input	200%		0 to 400% *1		
154 H631	Voltage reduction selection during stall prevention operation	1		0	Output voltage reduction enabled.	Enable/disable the output voltage reduction during stall prevention operation.
				1	Output voltage reduction disabled.	
				10	Output voltage reduction enabled.	Use this setting when the overvoltage protective function (E.OV[ ]) activates during stall prevention operation in an application with large load inertia.
				11	Output voltage reduction disabled.	
157 M430	OL signal output timer	0 s		0 to 25 s	Set the OL signal output start time when stall prevention is activated.	
				9999	No OL signal output.	
858 T040	Terminal 4 function assignment	0		0, 1, 4, 9999	When set "4", the stall prevention level can be changed with the signal to the terminal 4.	
868 T010	Terminal 1 function assignment	0		0 to 6, 9999	When set "4", the stall prevention level can be changed with the signal to the terminal 1.	

*1 The upper limit of stall prevention operation is limited internally to the following.
120% (SLD rating), 150% (LD rating), 220% (ND rating), or 280% (HD rating)

(1) Setting the stall prevention operation level (Pr.22)

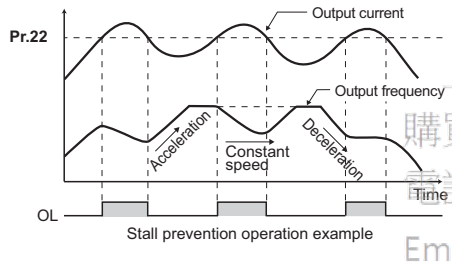

Stall prevention operation example

- For **Pr.22 Stall prevention operation level**, set the ratio of the output current to the inverter's rated current at which the stall prevention operation will be activated. Normally, this should be set at 150% (initial value).
- Stall prevention operation stops acceleration (makes deceleration) during acceleration, makes deceleration during constant speed, and stops deceleration during deceleration.
- When the stall prevention operation is performed, the Overload warning (OL) signal is output.

上正科技有限公司
購買、維修 加干加零組件
電話： 03-4663333
Email: service@repairtw.com
Line id: @zzzz
www.repairtw.com

REMARKS

- A continuous overloaded condition may activate a protective function such as motor overload trip (electronic thermal O/L relay function) (E.THM).
- When **Pr.156** has been set to activate the fast response current limit (initial value), the **Pr.22** setting should not be higher than 170%. Such setting will prevent torque generation
- When Real sensorless vector control or vector control is selected using **Pr. 800 Control method selection, Pr.22** serves as torque limit level. For the FR-A820-00250(3.7K) or lower and FR-A840-00126(3.7K) or lower, the initial value of **Pr.22** is 200% instead of 150%.

(2) Disabling the stall prevention operation and fast-response current limit according to operating conditions (Pr.156)

- Referring to the table below, enable/disable the stall prevention operation and the fast-response current limit operation, and also set the operation at OL signal output.

Pr.156 setting		Fast response current limit ○: enabled ●: disabled	Stall prevention operation selection ○: enabled ●: disabled			OL signal output ○: operation continued ●: operation stopped*1
			Acceleration	Constant speed	Deceleration	
0 (initial value)		○	○	○	○	○
1		●	○	○	○	○
2		○	●	○	○	○
3		●	●	○	○	○
4		○	○	●	○	○
5		●	○	●	○	○
6		○	●	●	○	○
7		●	●	●	○	○
8		○	○	○	●	○
9		●	○	○	●	○
10		○	●	○	●	○
11		●	●	○	●	○
12		○	○	●	●	○
13		●	○	●	●	○
14		○	●	●	●	○
15		●	●	●	●	—*2
100 *3	Power driving	○	○	○	○	○
	Regenerative driving	●	●	●	●	—*2

Pr.156 setting		Fast response current limit ○: enabled ●: disabled	Stall prevention operation selection ○: enabled ●: disabled			OL signal output ○: operation continued ●: operation stopped*1
			Acceleration	Constant speed	Deceleration	
16		○	○	○	○	●
17		●	○	○	○	●
18		○	●	○	○	●
19		●	●	○	○	●
20		○	○	●	○	●
21		●	○	●	○	●
22		○	●	●	○	●
23		●	●	●	○	●
24		○	○	○	●	●
25		●	○	○	●	●
26		○	●	○	●	●
27		●	●	○	●	●
28		○	○	●	●	●
29		●	○	●	●	●
30		○	●	●	●	●
31		●	●	●	●	—*2
101 *3	Power driving	●	○	○	○	○
	Regenerative driving	●	●	●	●	—*2

上正科技有限公司
購買、維修 此手冊零組件
電話：037-466333
Email: service@repairtw.com
Line id: @zzzz
www.repairtw.com

*1 When "operation stop at OL signal output" is selected, the fault output "E. OLT" (stop due to stall prevention) is displayed, and operation stops.

*2 The OL signal and E.OLT are not outputted because fast-response current limit and stall prevention are not operating.

*3 Setting values "100, 101" can be individually set for power driving and regenerative driving. The setting value "101" disables the fast-response current limit during power driving.

REMARKS

- When the load is heavy or the acceleration/deceleration time is short, stall prevention operates and acceleration/deceleration may not be performed according to the time set. In such case, set the **Pr.156** and the stall prevention operation level to the optimum values.
- For lift applications, make settings to disable the fast-response current limit. Otherwise, the torque may be insufficient, causing the load to drop.

(3) Adjusting the stall prevention operation signal output and output timing (OL signal, Pr.157)

- If the output current exceeds the stall prevention operation level and stall prevention is activated, Overload warning (OL) signal will turn ON for 100 ms or more. The output signal turns OFF when the output current falls to the stall prevention operation level or less.
- **Pr.157 OL signal output timer** can set whether to output the OL signal immediately, or to output it after a certain time period.
- This function also operates during regeneration avoidance operation oL (overvoltage stall).

Pr.157 setting	Description
0 (initial value)	Output immediately.
0.1 to 25	Output after the set time (s).
9999	Not output.

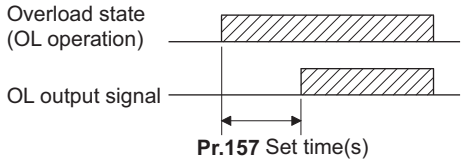

REMARKS

- OL signal is assigned to the terminal OL in the initial status. The OL signal can be assigned to other terminals by setting "3 (positive logic) or 103 (negative logic)" in any of **Pr.190 to Pr.196 (output terminal function selection)**.
- If the stall prevention operation has lowered the output frequency to 0.5 Hz and kept the level for 3 s, the stall prevention stop (E.OLT) is activated to shut off the inverter output.
- Changing the terminal assignment using **Pr.190 to Pr.196 (output terminal function selection)** may affect the other functions. Set parameters after confirming the function of each terminal.

FUJI科技有限公司
購買、維修 此手冊零組件
電話： 037-466333
Email: service@repairtw.com
Line id: @zzzz
www.repairtw.com

(4) Setting for stall prevention operation in the high-frequency range (Pr.22, Pr.23, Pr.66)

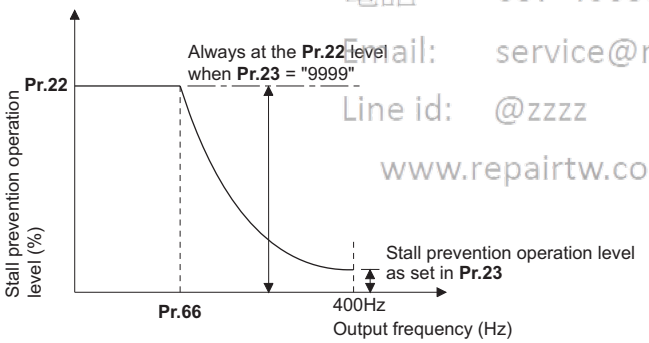

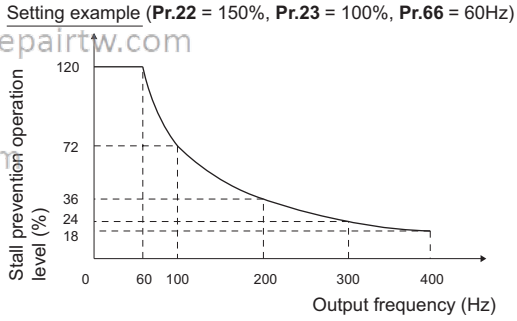

- When operating at the rated motor frequency or higher, acceleration may not be made because the motor current does not increase. Also, when operating in the high-frequency range, the current flowing to the locked motor becomes less than the rated output current of the inverter; and even if the motor is stopped, the protective function will not operate (OL). In a case like this, the stall prevention level can be reduced in the high-frequency range to improve the motor's operating characteristics. This is useful when operating up to the high speed range, such as when using a centrifuge. Normally, set **Pr.66 Stall prevention operation reduction starting frequency** to 60 Hz, and **Pr.23 Stall prevention operation level compensation factor at double speed** to 100%.
- Calculation formula for stall prevention operation level

$$\text{Stall prevention operation level (\%) in the high-frequency range} = A + B \times \left[\frac{\textbf{Pr.22} - A}{\textbf{Pr.22} - B}\right] \times \left[\frac{\textbf{Pr.23} - 100}{100}\right]$$

Where, $A = \dfrac{\textbf{Pr.66 (Hz)} \times \textbf{Pr.22(\%)}}{\text{Output frequency (Hz)}}$, $B = \dfrac{\textbf{Pr.66 (Hz)} \times \textbf{Pr.22(\%)}}{400\ \text{Hz}}$

- When **Pr.23** ="9999" (initial value), the stall prevention operation level is constant at the **Pr.22** level up to 400 Hz.

(5) Setting multiple stall prevention operation levels (Pr.48, Pr.49, Pr.114, Pr.115)

- By setting **Pr.49 Second stall prevention operation frequency** = "9999" and turning ON the RT signal, **Pr.48 Second stall prevention operation level** will be enabled.
- For **Pr.48(Pr.114)**, set the stall prevention operation level that is effective in the output frequency range between 0 Hz and **Pr.49(Pr.115)**. However, the operation level is **Pr.22** during acceleration.
- Stop-on-contact operation can be used by decreasing the **Pr.48(Pr.114)** setting and loosening the reduction torque (torque when stopped).
- **Pr.114 and Pr.115** are enabled when the X9 signal is ON. To input the X9 signal, set "9" in any of **Pr.178 to Pr.189 input terminal function selection** to assign the function to the terminal.

Pr.49 setting	Pr.115 setting	Operation
0 (initial value)		The second (third) stall prevention function disabled.
0.01 Hz to 590 Hz		The second (third) stall prevention function operates according to the frequency.*1
9999*2	Setting not available	The second stall prevention function operates according to the RT signal. RT signal ON : stall level **Pr.48** RT signal OFF : stall level **Pr.22**

*1 For the stall prevention operation level, the smaller of **Pr.22** and **Pr.48** (**Pr.115**) has precedence.

*2 When **Pr.858** = "4 (analog input to terminal 4 for stall prevention operation level)" or **Pr.868** = "4 (analog input to terminal 1 for stall prevention operation level)", turning ON the RT (X9) signal will not enable the second (third) stall prevention function. (Input to the terminal 4 or terminal 1 is valid.)

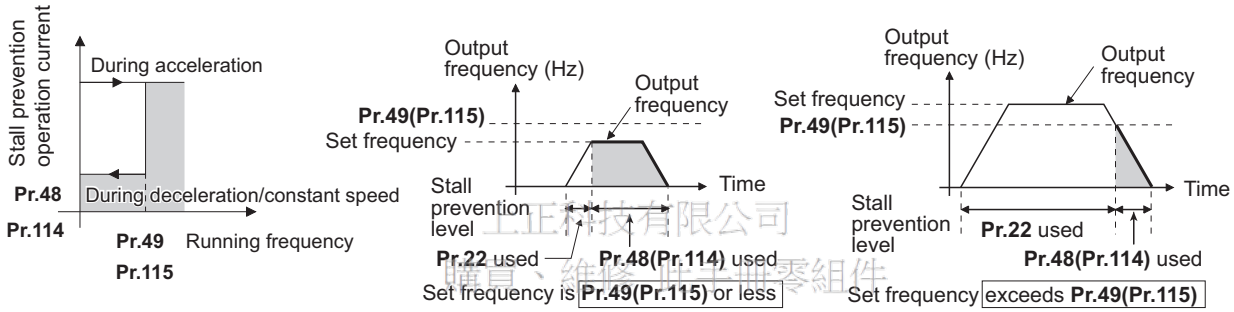

上正科技有限公司
購買、維修 此手冊零組件
電話： 037-466333
Email: service@repairtw.com
Line id: @zzzz
www.repairtw.com

REMARKS

- When **Pr.49** ≠ "9999" (level change according to frequency) and **Pr.48** = "0%", the stall prevention function will be disabled at or lower than the frequency set in **Pr.49**.
- The RT signal is assigned to the terminal RT in the initial status. Set "3" in any of **Pr.178 to Pr.189 (input terminal function selection)** to assign the RT signal to another terminal.
- Changing the terminal assignment using **Pr.178 to Pr.189 (input terminal function selection)** may affect the other functions. Set parameters after confirming the function of each terminal.
- The RT (X9) signal acts as the second (third) function selection signal and makes the other second (third) functions valid. (Refer to page 420.)

(6) Stall prevention operation level setting (analog variable) from terminal 1 (terminal 4) (Pr.148, Pr.149, Pr.858, Pr.868)

- To use the terminal 1 (analog voltage input) to set the stall prevention operation level, set **Pr.868 Terminal 1 function assignment** = "4". Then, input a 0 to 5 V (or 0 to 10 V) to the terminal 1. To choose whether 5 V or 10 V, use **Pr.73 Analog input selection**. In the initial status, **Pr.73** = "1 (initial value)" is set to choose 0 to ±10 V input.
- When setting the stall prevention operation level from terminal 4 (analog current input), set **Pr.858 Terminal 4 function assignment** = "4".
- Input 0 to 20 mA into terminal 4. There is no need to turn ON the AU signal.
- Set **Pr.148 Stall prevention level at 0 V input** to the current limit level when input voltage is 0 V (0 mA).
- Set **Pr.149 Stall prevention level at 10 V input** to the current limit level when input voltage is 10 V/5 V (20 mA).

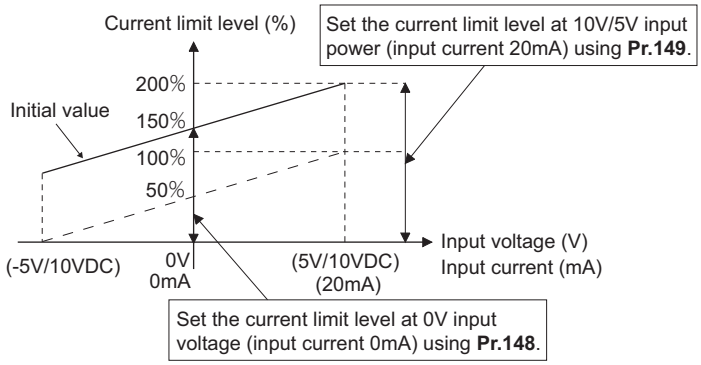

Pr.858 setting	Pr.868 setting	V/F, Advanced magnetic flux vector control	
		Terminal 4 function	Terminal 1 function
0 (initial value)	0 (initial value)	Frequency command (AU signal-ON)	Auxiliary frequency
	1		—
	2		—
	3		—
	4 *1		Stall prevention
	5		—
	6		—
	9999		—
1	0 (initial value)	—	—
	1		—
	2		—
	3		—
	4 *1		Stall prevention
	5		—
	6		—
	9999		—
4*2	0 (initial value)	Stall prevention	Auxiliary frequency
	1		—
	2		—
	3	—	—
	4 *1	—*2	Stall prevention
	5	Stall prevention	—
	6		—
	9999		—
9999	—	—	—

*1 When **Pr.868** = "4" (analog stall prevention), the other functions for terminal 1 (auxiliary input, override function, PID control) will be disabled.
*2 When **Pr.858** = "4" (analog stall prevention), PID control and speed commands using terminal 4 will not operate, even if the AU signal turns ON.
*3 When both of **Pr.858 and Pr.868** are set to "4" (stall prevention), terminal 1 functions take priority and terminal 4 has no function.

上元科技有限公司
購買、維修、批發變頻器
電話： 037-466333
Email: service@repairtw.com
Line id: @zzzz
www.repairtw.com

REMARKS

- The fast-response current limit cannot be set.

(7) To further prevent a trip (Pr.154)

- When **Pr.154 Voltage reduction selection during stall prevention operation** = "0, 10", the output voltage is reduced. By making this setting, an overcurrent trip becomes less likely to occur. Use this setting when torque reduction does not pose a problem. (Under V/F control, the output voltage is reduced only during the stall prevention operation is activated.)
- Set **Pr.154** = "10, 11" when the overvoltage protective function (E.OV[ ]) activates during stall prevention operation in an application with large load inertia. Note that turning OFF the start signal (STF/STR) or varying the frequency command during stall prevention operation may delay the acceleration/deceleration start.

Pr.154	E.OC[ ] countermeasure	E.OV[ ] countermeasure
0	Effective	—
1 (initial value)	—	—
10	Effective	Effective
11	—	Effective

⚠ Caution

⚠ **Do not set the stall prevention operation current too low.**
Doing so will reduce the generated torque.

⚠ **Be sure to perform a test run.**
Stall prevention operation during acceleration may extend the acceleration time.
Stall prevention operation during constant-speed operation may cause sudden speed changes.
Stall prevention operation during deceleration may extend the deceleration time.

♦ Parameters referred to ♦

Pr.22 torque limit level ☞page 181

Pr.73 Analog input selection ☞page 391

Pr.178 to Pr.189 (Input terminal function selection) ☞page 416

Pr.190 to Pr.196 (output terminal function selection) ☞page 370

Pr.858 Terminal 4 function assignment, Pr.868 Terminal 1 function assignment ☞page 395

5.10.12 Motor overspeeding detection

The Overspeed occurrence (E.OS) is activated when the motor speed exceeds the overspeed detection level. This function prevents the motor from accidentally speeding over the specified value, due to an error in parameter setting, etc.

Pr.	Name	Initial value	Setting range	Description
374 H800	Overspeed detection level	9999	0 to 590 Hz	If the motor rotation speed exceeds the speed set in **Pr.374** during encoder feedback control, Real sensorless vector control, vector control or PM sensorless vector control, Overspeed occurrence (E.OS) occurs, the inverter output is shut off.
			9999	If the speed exceeds "the maximum speed (**Pr.1**, **Pr.18**) + 20 Hz" during encoder feedback control, Real sensorless vector control, or vector control, E.OS occurs. During PM sensorless vector control, E.OS occurs when the speed exceeds "the motor maximum frequency + 10 Hz"*1

*1 The motor maximum frequency is set in **Pr.702 Maximum motor frequency**. When **Pr.702** = "9999 (initial value)", the **Pr.84 Rated motor frequency** setting is applied as the motor maximum frequency.

上正科技有限公司
購買、維修 此手冊零組件
電話： 037-466333
Email: service@repairtw.com
Line id: @zzzz
www.repairtw.com

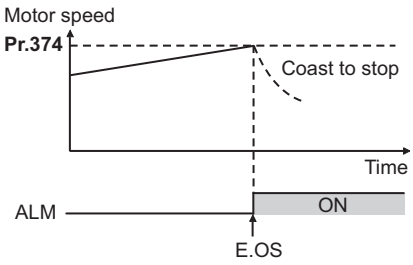

REMARKS

- During encoder feedback control and vector control, the motor speed is compared against **Pr.374**. During Real sensorless vector control and PM sensorless vector control, the output frequency is compared against **Pr.374**.

5.11 (M) Monitor display and monitor output signal

Purpose	Parameter to set			Refer to page
To display the motor speed. To set to rotations per minute.	Speed display and rotations per minute setting	P.M000 to P.M002, P.D030	Pr.37, Pr.144, Pr.505, Pr.811	344
To change the monitored item on the operation panel and parameter unit	Operation panel monitored item selection, clearing the cumulative monitor	P.M020 to P.M023, P.M030, P.M031, P.M044, P.M050 to P.M052, P.M100 to P.M104	Pr.52, Pr.170, Pr.171, Pr.268, Pr.290, Pr.563, Pr.564, Pr.774 to Pr.776, Pr.891, Pr.992 Pr.1106 to Pr.1108	346
To change the monitored item output from the terminal FM(CA) and AM	Terminal FM(CA) function selection	P.M040 to P.M042, P.M044, P.M300, P.M301, P.D100	Pr.54, Pr.55, Pr.56, Pr.158, Pr.290, Pr.291, Pr.866	356
To adjusting the terminal FM, terminal CA, and AM output	Terminal FM(CA), AM calibration	P.M310, P.M320, P.M321, P.M330 to P.M334	Pr.867, Pr.869, C0(Pr.900), C1(Pr.901), C8(Pr.930) to C11(Pr.931)	361
To check the effects of energy saving	Energy saving monitor	P.M023, P.M100, P.M200 to P.M207, P.M300, P.M301	Pr.52, Pr.54, Pr.158, Pr.891 to Pr.899	365
To assign functions to the output terminals	Output terminal function assignment	P.M400 to P.M406, P.M431	Pr.190 to Pr.196, Pr.289	370
To detect the output frequency	Up-to-frequency sensitivity Output frequency detection Low speed detection	P.M440 to P.M446	Pr.41 to Pr.43, Pr.50, Pr.116, Pr.865, Pr.870	378
To detect the output current	Output current detection Zero current detection	P.M460 to P.M464	Pr.150 to Pr.153, Pr.166, Pr.167	381
To detecting the output torque	Output torque detection	P.M470	Pr.864	383
To use the remote output function	Remote output	P.M500 to P.M502	Pr.495 to Pr.497	384
To use the analog remote output function	Analog remote output	P.M530 to P.M534	Pr.655 to Pr.659	385
To output the fault code from a terminal	Fault code output function	P.M510	Pr.76	387
Detect specified output power	Pulse train output of output power	P.M520	Pr.799	388
Detects the control circuit temperature.	Control circuit temperature monitor	P.M060	Pr.663	389

上正科技有限公司
購買、維修 此手冊零組件
電話： 037-466333
Email: service@repairtw.com
Line id: @2222
www.repairtw.com

5.11.1 Speed display and rotations per minute setting

The monitor display unit and the frequency setting on PU(FR-DU08/FR-PU07) can be switched to motor speed and machine speed.

Pr.	Name	Initial value FM	Initial value CA	Setting range	Description	
37 M000	Speed display	0		0	Frequency display and setting	
				1 to 9998*1	Set the machine speed for **Pr.505**.	
505 M001	Speed setting reference	60 Hz	50 Hz	1 to 590 Hz	Set the reference speed for **Pr.37**.	
144 M002	Speed setting switchover	4		0, 2, 4, 6, 8, 10, 12, 102, 104, 106, 108, 110, 112	Set the number of motor poles when displaying the motor speed.	
811 D030	Set resolution switchover	0			**Speed setting, running speed monitor increments on PU, RS-485 communication, communication options**	**Torque limit setting increments Pr.22, Pr.812 to Pr.817**
				0	1 r/min	0.1%
				1	0.1 r/min	
				10	1 r/min	0.01%
				11	0.1 r/min	

*1 The maximum value of the setting range differs according to the **Pr.1 Maximum frequency**, **Pr.505 Speed setting reference**, and it can be calculated from the following formula.
The maximum value of **Pr.37** < 65535 × **Pr.505** / **Pr.1** setting value (Hz).
The maximum setting value of **Pr.37** is 9998 if the result of the above formula exceeds 9998.

上正科技有限公司
購買、維修 此手冊零組件
電話： 937-466333
Email: service@repairtw.com
Line id: @zzzz
www.repairtw.com

(1) Display in speed (Pr.37, Pr.144)

- Set the number of motor poles (2, 4, 6, 8, 10, 12) for **Pr.144**, or the number of motor poles + 100 (102, 104, 106, 108, 110, 112) to display the motor speed.
- The **Pr.144** setting will change automatically when setting the motor poles with **Pr.81 Number of motor poles**. **Pr.81** will not automatically change when **Pr.144** is changed.
  Example 1) Changing the initial value of **Pr.81** to "2" will change **Pr.144** from "4" to "2".
  Example 2) When setting **Pr.81** = "2" while **Pr.144** = "104", **Pr.144** will change from "104" to "102".

(2) Display in motor speed (Pr.37, Pr.505)

- To display in the machine speed, set **Pr.37** to the machine speed at the frequency set in **Pr.505**.
- For example, when **Pr.505** = "60 Hz" and **Pr.37** = "1000", the running speed monitor will display "1000" at the running speed of 60 Hz.When running frequency is 30 Hz, "500" is displayed.

(3) Changing the monitored value and speed setting increment (Pr.811)

- When **Pr.811** = "1 or 11", the speed setting for PU input and RS-485 communication, speed setting from communication option and the running speed monitor will be in increments of 0.1 r/min.
- For availability of changing the speed setting increments via communication options, refer to the Instruction Manual of each communication option.

(4) Monitor display (setting) increments

- When both **Pr.37** and **Pr.144** have been set, their priorities are as given below.
  Pr.144 = 102 to 112 > **Pr.37** = 1 to 9998 > **Pr.144** = 2 to 12
- The combination of the **Pr.37** and **Pr.144** settings as shown below determines the setting increment for each monitor. (The initial values are shown within the thick lines.)

Pr.37 Setting	Pr.144 Setting	Output frequency monitor	Set frequency monitor	Running speed monitor	Frequency setting parameter setting
0 (initial value)	0	0.01 Hz	0.01 Hz	1 r/min*1*2	0.01 Hz
	2 to 12	0.01 Hz	0.01 Hz	1 r/min*1*2	0.01 Hz
	102 to 112	1 r/min*1*2	1 r/min *1*2	1 r/min*1*2	1 r/min*1
1 to 9998	0	0.01 Hz	0.01 Hz	1 (machine speed*1)	0.01 Hz
	2 to 12	1 (machine speed*1)	1 (machine speed*1)	1 (machine speed*1)	1 (machine speed*1)
	102 to 112	0.01 Hz	0.01 Hz	1 r/min *1*2	0.01 Hz

*1 Motor speed r/min conversion formula: ..... frequency × 120 / number of motor poles **(Pr.144)**
Machine speed conversion formula:..... **Pr.37** × frequency / **Pr.505**
For **Pr.144** in the above formula, the value is "**Pr.144** - 100" when "102 to 112" is set in **Pr.144**; and the value is "4" when **Pr.37** = 0 and **Pr.144** = 0.
Pr.505 is always set as frequency (Hz).

*2 Use **Pr.811** to change the increment from 1 r/min to 0.1 r/min.

REMARKS

- The inverter's output frequency is displayed as synchronous speed under V/F control. The displayed value is "actual motor speed" + "motor slip." When Advanced magnetic flux vector control, Real sensorless vector control or PM sensorless vector control is selected, the actual motor speed (estimated value by motor slip calculation) is used. When the encoder feedback control or vector control is selected, the actual motor speed from the encoder is used.
- When **Pr.37** = "0" and **Pr.144** = "0", the running speed monitor is displayed with the number of motor poles 4. (Displays 1800 r/min at 60 Hz)
- To change the PU main monitor (PU main display), refer to **Pr.52**.
- If the setting increment is changed to 1 r/min (**Pr.811** = "0,10") after setting the running speed in 0.1 r/min (**Pr.811** = "1,11"), the 0.1 r/min increment may be dropped, in order for the rotations per minute resolution to change from 0.1 r/min to 0.3 r/min (when using four poles).
- When using the machine speed display for the parameter unit (FR-PU07), do not change the speed with the up/down key if a set speed above 65535 is being displayed. The set speed may become an undetermined value.
- When the FR-A8ND option is connected, the frequency display (setting) will be used regardless of the **Pr.37, Pr.144** settings.
- When **Pr.811** = "1 or 11" with the 0.1 r/min increment, the upper limit is as follows.
  Speed command setting range: 6000 r/min for 2 to 10 motor poles, 5900 r/min for 12 motor poles
  Running speed monitor such as the operation panel: 6553.5 r/min
  Full scale of the running speed motor for analog output (terminals FM, CA and AM): 6000 r/min

上正科技有限公司
購買、維修 此手冊零組件
電話： 037-466333
Email: service@repairtw.com
Line id: @zzzz
www.repairtw.com

⚠ Caution

⚠ **Make sure to set the running speed and the number of motor poles.**
Otherwise, the motor might run at extremely high speed, damaging the machine.

♦ Parameters referred to ♦

Pr.1 Maximum frequency ☞ page 334
Pr.22 Torque limit level ☞ page 181
Pr.52 Operation panel main monitor selection ☞ page 346
Pr.81 Number of motor poles ☞ page 160
Pr.800 Control method selection ☞ page 160
Pr.811 Set resolution switchover ☞ page 181

5.11.2 Monitor indicator selection using operation panel or via communication

The monitored item to be displayed on the operation panel (FR-DU08) or the parameter unit (FR-PU07) can be selected.

Pr.	Name	Initial value	Setting range	Description
52 M100	Operation panel main monitor selection	0 (output frequency)	0, 5 to 14, 17 to 20, 22 to 35, 38, 40 to 45, 50 to 57, 61, 62, 64, 67, 87 to 98, 100	Select the monitor to be displayed on the operation panel and parameter unit. Refer to page 347 for the monitor description.
774 M101	Operation panel monitor selection 1	9999	1 to 3, 5 to 14, 17 to 20, 22 to 35, 38, 40 to 45, 50 to 57, 61, 62, 64, 67, 87 to 98, 100, 9999	The output frequency, output current and output voltage monitor that are displayed in monitor mode on the operation panel and parameter unit can be switched to a specified monitor. 9999: Follows the **Pr.52** setting.
775 M102	Operation panel monitor selection 2			
776 M103	Operation panel monitor selection 3			
992 M104	Operation panel setting dial push monitor selection	0 (Set frequency)	0 to 3, 5 to 14, 17 to 20, 22 to 35, 38, 40 to 45, 50 to 57, 61, 62, 64, 67, 87 to 98, 100	Select the monitor to be displayed when the setting dial on the operation panel is pushed.
170 M020	Watt-hour meter clear	9999	0	Set "0" to clear the watt-hour meter monitor.
			10	Set the maximum value for monitoring via communication. Set it in the range of 0 and 9999 kWh.
			9999	Set the maximum value for monitoring via communication. Set it in the range of 0 and 65535 kWh.
563 M021	Energization time carrying-over times	0	(0 to 65535) (Read-only)	Displays the numbers of times that the cumulative energization time monitor exceeded 65535 h. Read-only.
268 M022	Monitor decimal digits selection	9999	0	Displays as integral value.
			1	Displays in 0.1 increments.
			9999	No function
891 M023	Cumulative power monitor digit shifted times	9999	0 to 4	Set the number of times to shift the cumulative power monitor digit. The monitor value is clamped at the maximum value.
			9999	No shift Monitor value is cleared when it exceeds the maximum value.
171 M030	Operation hour meter clear	9999	0	Set "0" to clear the operation hour monitor.
			9999	The read value is always 9999. Nothing happens when "9999" is set.
564 M031	Operating time carrying-over times	0	(0 to 65535) (Read-only)	Displays the numbers of times that the operating time monitor exceeded 65535 h. Read-only.
290 M044	Monitor negative output selection	0	0 to 7	Set the availability of output with a minus sign for the terminal AM, the operation panel display, or monitoring via communication. (Refer to page 355)
1106 M050	Torque monitor filter	9999	0 to 5 s	The filter time constant is selectable for monitoring of the torque. A larger setting results in slower response.
			9999	0.3 s filter
1107 M051	Running speed monitor filter	9999	0 to 5 s	The filter time constant is selectable for monitoring of the running speed. A larger setting results in slower response.
			9999	0.08 s filter
1108 M052	Excitation current monitor filter	9999	0 to 5 s	The filter time constant is selectable for monitoring of the motor excitation current. A larger setting results in slower response.
			9999	0.3 s filter

上正科技有限公司
購買、維修 此手冊零組件
電話： 037-466233
Email: service@repairtw.com
Line id: @zzzz
www.repairtw.com

(1) Monitor description list (Pr.52, Pr.774 to Pr.776, Pr.992)

- Set the monitor to be displayed on the operation panel (FR-DU08) and parameter unit (FR-PU07) in **Pr.52, Pr.774 to Pr.776, Pr.992**.
- Refer to the following table and set the monitor to be displayed. (The monitor marked —— cannot be selected. o in the [Minus (-) display] indicates a display with a minus sign.)

Types of monitor	Unit	Pr.52, Pr.774 to Pr.776, Pr.992		RS-485 communication dedicated monitor (hexadecimal)	Modbus-RTU real time monitor	Minus (-) display	Description
		Operation panel	PU main monitor				
Output frequency/ speed*17	0.01 Hz/1 *16	1/0/100		H01	40201		Displays the inverter output frequency.
Output current *6*8*17	0.01 A/ 0.1 A*5	2/0/100		H02	40202		Displays the inverter output current effective value.
Output voltage*6*17	0.1 V	3/0/100		H03	40203		Displays the inverter output voltage.
Fault display	——	0/100		——	——		Displays 8 past faults individually.
Frequency setting value/speed setting	0.01 Hz/1 *16	5	*1	H05	40205		Displays the set frequency
Running speed	1 (r/min)	6	*1	H06	40206		Displays the motor speed (by the **Pr.37, Pr.144** settings). (Refer to page 344) The actual motor speed by encoder signal is used during encoder feedback control and vector control.
Motor torque	0.1%	7	*1	H07	40207	o	Displays motor torque as a percentage (0% under V/F control), considering the rated torque as 100%.
Converter output voltage*6	0.1 V	8	*1	H08	40208		Displays the DC bus voltage value.
Regenerative brake duty*7	0.1%	9	*1	H09	40209		Brake duty set in **Pr.30** and **Pr.70**
Electronic thermal O/L relay load factor	0.1%	10	*1	H0A	40210		Displays the motor thermal cumulative value, considering the thermal operation level as 100%.
Output current peak value*6	0.01 A/ 0.1 A*5	11	*1	H0B	40211		Saves and displays the output current monitor peak value. (Cleared with each start.)
Converter output voltage peak value*6	0.1 V	12	*1	H0C	40212		Saves and displays the DC bus voltage peak value. (Cleared with each start.)
Input power	0.01 kW/ 0.1 kW*5	13	*1	H0D	40213		Displays the power at the inverter input side.
Output power*8	0.01 kW/ 0.1 kW*5	14	*1	H0E	40214		Displays the power at the inverter output side.
Load meter	0.1%	17		H11	40217		Displays torque current as a percentage, considering **Pr.56** setting value as 100% (motor rated torque is considered as 100% during Sensorless vector and vector control).
Motor excitation current*6	0.01 A/ 0.1 A*5	18		H12	40218		Displays the motor excitation current
Position pulse	——	19		H13	40219		Displays the number of pulses per motor rotation during orientation control and position control. (Dedicated for FR-A8AP. Voltage monitor will appear when FR-A8AP is not connected.)

上正科技有限公司
購買、維修 此手冊零組件
電話： 037-466333
Email: service@repairtw.com
Line id: @zzz
www.repairtw.com

(M) Monitor display and monitor output signal

Types of monitor	Unit	Pr.52, Pr.774 to Pr.776, Pr.992		RS-485 communication dedicated monitor (hexadecimal)	Modbus-RTU real time monitor	Minus (-) display	Description
		Operation panel	PU main monitor				
Cumulative energization time*2	1 h	20		H14	40220		Displays the cumulative energization time since the inverter shipment. Check how many times the monitor value exceeded 65535 h with **Pr.563**.
Orientation status*10	1	22		H16	40222		Displays values only when orientation control is enabled. (Voltage monitor will appear when FR-A8AP is not connected.) (Refer to page 471)
Actual operation time*2*3	1 h	23		H17	40223		Displays the cumulative time since the inverter began running. The number of times the monitor value exceeded 65535 h can be checked with **Pr.564** This can be cleared with **Pr.171.** (Refer to page 354)
Motor load factor	0.1%	24		H18	40224		Displays the output current value as a percentage, considering the inverter rated current value as 100%. Monitor value = output current monitor value / inverter rated current × 100 [%]
Cumulative power*6	0.01 kWh/0.1 kWh*4*5	25		H19	40225		Displays the cumulative energy based on the output power monitor. This can be cleared with **Pr.170**. (Refer to page 354.)
Position command	1	26		H1A	40226	O	Displays the position command (decimal) before the electronic gear is set.*9
Position command (upper digits)	1	27		H1B	40227	O	
Current position	1	28		H1C	40228	O	Displays the value of the position feedback pulse after converting it into the number of pulses before the electronic gear is set.*9
Current position (upper digits)	1	29		H1D	40229	O	
Droop puls	1	30		H1E	40230	O	Displays the droop pulse before the electronic gear.*9
Droop pulse (upper digits)	1	31		H1F	40231	O	
Torque command	0.1%	32		H20	40232	O	Displays the torque command value obtained from the vector control results.
Torque current command	0.1%	33		H21	40233	O	Displays the commanded current for the torque.
Motor output	0.01 kW/ 0.1 kW*5	34		H22	40234		Multiplies the output torque at that time with the motor speed, and displays the machine output for the motor shaft end.
Feedback pulse*10	——	35		H23	40235		Display the number of pulses fed back from the encoder during one sampling (also displays during stop). (Voltage monitor will appear when FR-A8AP is not connected.) The sampling time varies with the **Pr.369 Number of encoder pulses setting.** 1050 or less: 1 s 1051 to 2100: 0.5 s 2101 to 4096: 0.25 s

上正科技有限公司
購買、維修 此手冊零組件
電話： 037-466333
Email: service@repairtw.com
Line id: @zzzz
www.repairtw.com

Types of monitor	Unit	Pr.52, Pr.774 to Pr.776, Pr.992		RS-485 communication dedicated monitor (hexadecimal)	Modbus-RTU real time monitor	Minus (-) display	Description
		Operation panel	PU main monitor				
Trace status	1	38		H26	40238		Displays the trace status. (Refer to page 529)
PLC function user monitor 1	According to the SD1215 setting	40		H28	40240		Displays the arbitrary monitoring item using the PLC function. Displays the following special register values. SD1216: Displays in No.40 SD1217: Displays in No.41 SD1218: Displays in No.42 (Refer to the FR-A800 PLC Function Programming Manual [IB-0600492ENG].)
PLC function user monitor 2		41		H29	40241		
PLC function user monitor 3		42		H2A	40242		
Station number (RS-485 terminals)	1	43		H2B	40243		Displays which station number (0 to 31) can currently be used for communication from the RS-485 terminal block.
Station number (PU)	1	44		H2C	40244		Displays which station number (0 to 31) can currently be used for communication from the PU connector.
Station number (CC-Link)	1	45		H2D	40245		Displays which station number (0 to 31) can currently be used for CC-Link communication. Displays "0" when the FR-A8NC is not connected.
Energy saving effect	Changeable by parameter setting.	50		H32	40250		Displays the energy saving effect monitor. Conversion to power saving, average power saving, price display, and percentage display can be done using parameters. (Refer to page 365.)
Cumulative energy saving		51		H33	40251		
PID set point	0.1%	52		H34	40252		Displays the set point, measured value, and deviation under PID control. (Refer to page 492)
PID measured value	0.1%	53		H35	40253		
PID deviation	0.1%	54		H36	40254	o	
Input terminal status	——	55	*1	H0F*11	40215*11		Displays input terminal ON/OFF state of the inverter. (Refer to page 353 for DU display.)
Output terminal status	——		*1	H10*12	40216*12		Displays output terminal ON/OFF state of the inverter. (Refer to page 353 for DU display.)
Option input terminal status*10	——	56	——	——	——		Displays input terminal ON/OFF state of the digital input option (FR-A8AX) on the DU. (Refer to page 353 for details.)
Option output terminal status*10	——	57	——	——	——		Displays output terminal ON/OFF state of the digital output option (FR-A8AY) and the relay output option (FR-A8AR) on the DU. (Refer to page 353 for details.)
Option input terminal status 1 (for communication)*10	——	——		H3A*13	40258*13		Input terminal X0 to X15 ON/OFF state of the digital input option (FR-A8AX) can be monitored via RS-485 communication and the communication option.
Option input terminal status 2 (for communication)*10	——	——		H3B*14	40259*14		Input terminal DY ON/OFF state of the digital input option (FR-A8AX) can be monitored via RS-485 communication and the communication option.

上正科技有限公司
購買、維修 此手冊零組件
電話： 037-466333
Email: service@repairtw.com
Line id: @xzz
www.repairtw.com

(M) Monitor display and monitor output signal

Types of monitor	Unit	Pr.52, Pr.774 to Pr.776, Pr.992		RS-485 communication dedicated monitor (hexadecimal)	Modbus-RTU real time monitor	Minus (-) display	Description
		Operation panel	PU main monitor				
Option output terminal status 1 (for communication)*10	——	——		H3C*15	40260*15		Output terminal ON/OFF state of the digital output option (FR-A8AY) and relay output option (FR-A8AR) can be monitored via RS-485 communication and the communication option.
Motor thermal load factor	0.1%	61		H3D	40261		Displays the accumulated heat value of the motor thermal O/L relay. The motor overload trip (E.THM) occurs at 100%.
Inverter thermal load factor	0.1%	62		H3E	40262		Displays the accumulated heat value of the inverter thermal O/L relay. The inverter overload trip (E.THT) occurs at 100%.
PTC thermistor resistance	0.01 kΩ	64		H40	40264		Displays the PTC thermistor resistance when **Pr.561 PTC thermistor protection level** ≠ 9999 (voltage monitor when **Pr.561** = 9999).
PID measured value 2	0.1%	67		H43	40267		Displays the PID control measured value even when PID control is disabled. (Refer to page 492)
32-bit cumulative power (lower 16 bits)	1 kWh	´		H4D	40277		Displays the 32-bit cumulative power value in multiples of 16 bits. Monitoring can be performed via RS-485 communication and communication options. (To find the monitor codes for each communication option, refer to the Instruction Manual of each communication option.)
32-bit cumulative power (upper 16 bits)	1 kWh	´		H4E	40278		
32-bit cumulative power (lower 16 bits)	0.01 kWh/0.1 kWh*5	´		H4F	40279		
32-bit cumulative power (upper 16 bits)	0.01 kWh/0.1 kWh*5	´		H50	40280		
Remote output value 1	0.1%	87		H57	40287	O	Displays the setting values of **Pr.656 to Pr.659** (analog remote output). (Refer to page 385.)
Remote output value 2	0.1%	88		H58	40288		
Remote output value 3	0.1%	89		H59	40289		
Remote output value 4	0.1%	90		H5A	40290		
PID manipulated variable	0.1%	91		H5B	40291	O	Displays the PID control manipulated amount. (Refer to page 492)
Second PID set point	0.1%	92		H5C	40292		Displays the set point, measured value, and deviation under second PID control. (Refer to page 492)
Second PID measured value	0.1%	93		H5D	40293		
Second PID deviation	0.1%	94		H5E	40294	O	
Second PID measured value 2	0.1%	95		H5F	40295		Displays the second PID control measured value even when the second PID control is disabled.(Refer to page 492)
Second PID manipulated variable	0.1%	96		H60	40296	O	Displays the second PID control manipulated amount. (Refer to page 492)

上正科技有限公司
購買、維修 此手冊零組件
電話: 037-466333
Email: service@repairtw.com
Line id: @zzzz
www.repairtw.com

Types of monitor	Unit	Pr.52, Pr.774 to Pr.776, Pr.992		RS-485 communication dedicated monitor (hexadecimal)	Modbus-RTU real time monitor	Minus (-) display	Description
		Operation panel	PU main monitor				
Dancer main speed setting	0.01 Hz	97		H61	40297		Displays the main speed setting under step control
Control circuit temperature	1°C	98		H62	40298	O	Displays the temperature of the control circuit board. Without minus sign: 0 to 100°C With minus sign: -20 to 100°C

*1 Frequency setting to output terminal status on the PU main monitor is selected by "other monitor selection" of the parameter unit (FR-PU07).

*2 The cumulative energization time and actual operation time are accumulated from 0 to 65535 hours, then cleared, and accumulated again from 0.

*3 The actual operation time does not increase if the cumulative running time before power OFF is less than an hour.

*4 When using the parameter unit (FR-PU07), "kW" is displayed.

*5 Differs according to capacities. (FR-A820-03160(55K) or lower, FR-A840-01800(55K) or lower /FR-A820-03800(75K) or higher, FR-A840-02160(75K) or higher)

*6 Since the voltage and current display on the operation panel (FR-DU08) is shown in four digits, a monitor value of more than "9999" is displayed as "----".

*7 Not compatible with the IP55 compatible model.

*8 When the output current is less than the specified current level (5% of the rated inverter current), the output current is monitored as 0 A. Therefore, the monitored value of an output current and output power may be displayed as "0" when using a much smaller-capacity motor compared to the inverter or in other instances that cause the output current to fall below the specified value.

*9 Can be changed to the pulse display after the electronic gear using **Pr.430 Pulse monitor selection**.

*10 Available when the plug-in option is connected.

*11 Input terminal monitor details (terminal ON denotes "1", terminal OFF denotes "0", and "—" denotes undetermined value.)

b15															b0
—	—	—	—	CS	RES	STOP	MRS	JOG	RH	RM	RL	RT	AU	STR	STF

*12 Output terminal monitor details (terminal ON denotes "1", terminal OFF denotes "0", and "—" denotes undetermined value.)

b15															b0
—	—	—	—	—	—	—	—	SO	ABC2	ABC1	FU	OL	IPF	SU	RUN

*13 Option input terminal monitor 1 details (FR-A8AX input terminal status, terminal ON denotes "1" and terminal OFF denotes "0".) —— All are OFF when the option is not connected.

b15															b0
X15	X14	X13	X12	X11	X10	X9	X8	X7	X6	X5	X4	X3	X2	X1	X0

*14 Option input terminal monitor 2 details (FR-A8AX input terminal status. Terminal ON denotes "1", terminal OFF denotes "0", "——" denotes undetermined value.) —— All are OFF when the option is not connected.

b15															b0
—	—	—	—	—	—	—	—	—	—	—	—	—	—	—	DY

*15 Option output terminal monitor details (FR-A8AY/A8AR output terminal status. Terminal ON denotes "1", terminal OFF denotes "0", and "—" denotes undetermined value.)—— All are OFF when the option is not connected.

b15															b0
—	—	—	—	—	—	RA3	RA2	RA1	Y6	Y5	Y4	Y3	Y2	Y1	Y0

*16 The increment is 1 when **Pr.37** = "1 to 9998" or when **Pr.144** = "2 to 12" or "102 to 112". (Refer to page 344.)

*17 The monitored values are retained even if an inverter fault occurs. Resetting will clear the retained values.

上正科技有限公司
購買、維修 此手冊零組件
電話： 037-466353
Email: service@repairtw.com
Line id @zzz
www.repairtw.com

(M) Monitor display and monitor output signal

(2) Monitor display for operation panel (Pr.52, Pr.774 to Pr.776)

- When Pr.52 = "0" (initial value), the monitoring of output frequency, output current, output voltage and fault display can be selected in sequence by pressing SET.
- The Load meter, Motor excitation current and Motor load factor are displayed on the second monitor (output current) position, among the monitors set in **Pr.52**. Other monitors are displayed in the third monitor (output voltage) position.
- The monitor displayed at power ON is the first monitor (the output frequency monitor, according to the initial value). Display the monitor that will be the first monitor, and continue pressing SET for 1 s. (To return to the output frequency monitor, display the output frequency monitor and press SET for 1 s.)

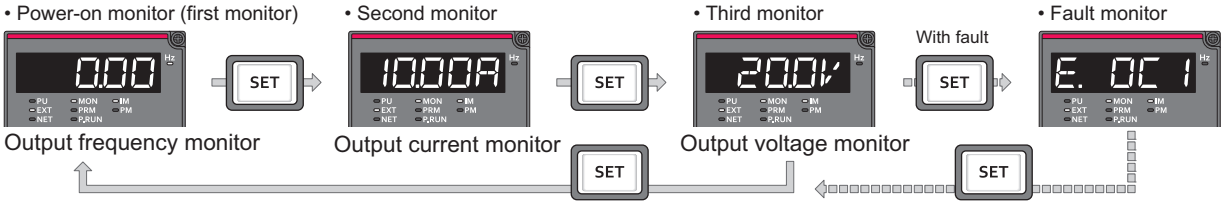

- For example, when Pr.52 = "20" (cumulative energization time), the monitor is displayed on the operation panel as shown below.

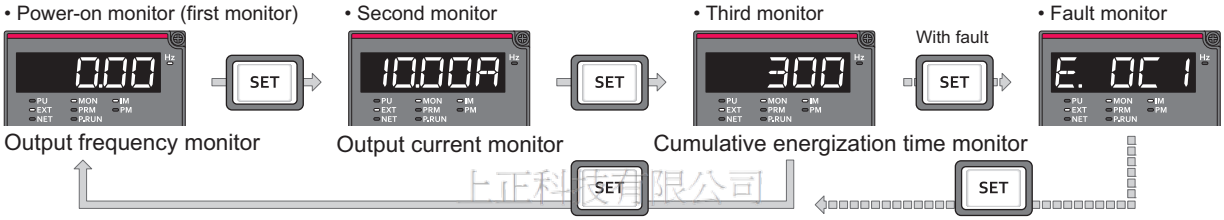

上正科技有限公司
購買 維修 此手冊零組件
電話： 037-466333
Email: service@repairtw.com
Line id: @zzzz
www.repairtw.com

- **Pr.774** sets the output frequency monitor, **Pr.775** sets the output current monitor, and **Pr.776** sets the monitor description to be displayed at the output voltage monitor position. When **Pr.774 to Pr.776** = "9999" (initial value), the **Pr.52** setting value is used.

REMARKS

- On the operation panel (FR-DU08), the "Hz" unit indicator is lit while displaying the output frequency, the "Hz" flickers when displaying the set frequency.

(3) Displaying the set frequency during stop (Pr.52)

- When **Pr.52** = "100", the set frequency is displayed during stop, and output frequency is displayed during running. (LED of Hz flickers during stop and is lit during operation.)

Pr.52 setting	Status	Output frequency	Output current	Output voltage	Fault or alarm indication
0	During running/stop	Output frequency	Output current	Output voltage	Fault or alarm indication
100	During stop	Set frequency*1			
	Running	Output frequency			

*1 Displays the frequency that is output when the start command is ON. The value considers the maximum/minimum frequency and frequency jumps. It is different from the frequency setting displayed when **Pr.52** = "5".

REMARKS

- During an error, the output frequency at error occurrence appears.
- During output shutoff by the MRS signal, the values displayed are the same as during a stop.
- During offline auto tuning, the tuning state monitor takes priority.

(4) Operation panel setting dial push display (Pr.992)

- Use **Pr.992** to select the monitor that appears when the setting dial on the operation panel (FR-DU08) is pushed.
- When **Pr.992** = "0 (initial value)", keep pressing the setting dial when in PU operation mode or External/PU combined operation mode 1 (**Pr.79 Operation mode selection** = "3") to show the presently set frequency.
- When **Pr.992** = "100", the set frequency is displayed during stop, and output frequency is displayed during running.

Pr.992 setting	Status	Monitor displayed by the setting dial push
0	During running/stop	Set frequency (PU direct-in frequency)
100	During stop	Set frequency*1
	Running	Output frequency

*1 Displays the frequency that is output when the start command is ON. The value considers the maximum/minimum frequency and frequency jumps. It is different from the frequency setting displayed when **Pr.992** = "5".

(5) Operation panel (FR-DU08) I/O terminal monitor (Pr.52)

- When **Pr.52** = "55 to 57", the I/O terminal state can be monitored on the operation panel (FR-DU08).
- The output terminal monitor is displayed on the third monitor.
- The LED is ON when the terminal is ON, and the LED is OFF when the terminal is OFF. The center line of LED is always ON.

Pr.52 setting	Monitor description
55	Displays the I/O terminal ON/OFF state of the inverter.
56*1	Displays input terminal ON/OFF state of the digital input option (FR-A8AX)
57*1	Displays output terminal ON/OFF state of the digital output option (FR-A8AY) or the relay output option (FR-A8AR).

*1 The setting values "56, 57" can be set even if the option is not installed. All are OFF when the option is not connected.

- On the I/O terminal monitor (**Pr.52** = "55"), the upper LEDs denote the input terminal state, and the lower LEDs denote the output terminal state.

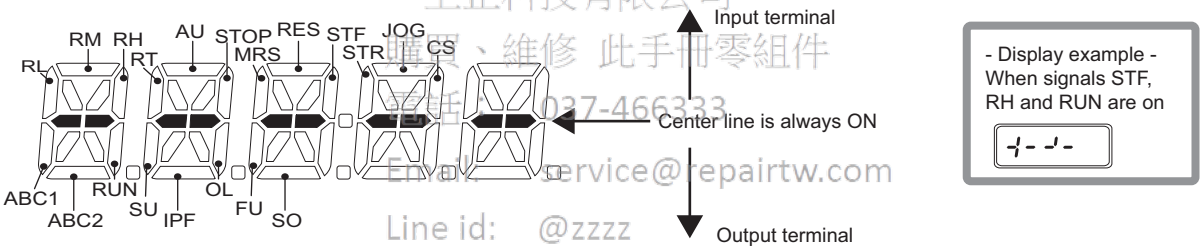

上正科技有限公司
購買、維修 此手冊零組件
電話: 037-466333
Email: service@repairtw.com
Line id: @zzzz
www.repairtw.com

- The decimal point of the first digit on the LED will light for the input option terminal monitor (**Pr.52** = "56").

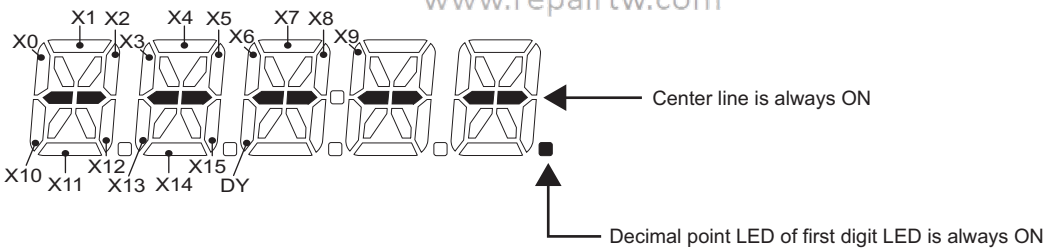

- The decimal point of the second digit on the LED will light for the output option terminal monitor (**Pr.52** = "57").

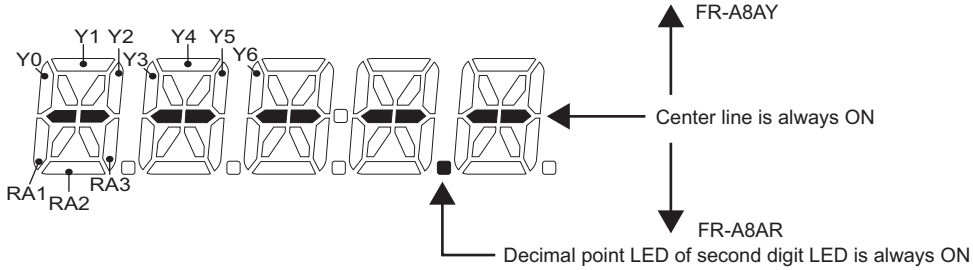

(M) Monitor display and monitor output signal

(6) Cumulative power monitor and clear (Pr.170, Pr.891)

- On the cumulative power monitor (**Pr.52** = "25"), the output power monitor value is added up and updated in 100 ms increments. (The values are saved in EEPROM every hour.)
- Display increments and display ranges of the operation panel (FR-DU08), parameter unit (FR-PU07) and communication (RS-485 communication, communication option) are as indicated below.

Operation panel, parameter unit*1		Communication		
Range	Unit	Range		Unit
		Pr.170 = 10	Pr.170 = 9999	
0 to 999.99 kWh	0.01 kWh	0 to 9999 kWh	0 to 65535 kWh (initial value)	1 kWh
1000.0 to 9999.9 kWh	0.1 kWh			
10000 to 99999 kWh	1 kWh			

*1 Power is measured in the range of 0 to 99999.99 kWh, and displayed in five digits.When the monitor value exceeds "999.99", a carry occurs, for example "1000.0", so the value is displayed in 0.1 kWh increments.

- The monitor data digit can be shifted to the right by the number of **Pr.891**.
  For example, if the cumulative power value is 1278.56 kWh when **Pr.891** = "2", the operation panel display is 12.78 (display in 100 kWh increments) and the communication data is 12.
- If the maximum value is exceeded at **Pr.891** = "0 to 4", the monitor value is clamped at the maximum value, indicating that a digit shift is necessary. If the maximum value is exceeded at **Pr.891** = "9999", the monitor value returns to 0, and the counting starts again.
- Writing "0" in **Pr.170** clears the cumulative power monitor.

REMARKS

- If "0" is written to **Pr.170**, and **Pr.170** is read again, "9999" or "10" is displayed.

(7) Cumulative energization time and actual operation time monitor (Pr.171, Pr.563, Pr.564)

上正科技有限公司
購買、維修 此手冊零組件
電話： 037-466333
Email: service@repairtw.com
Line id: @zzzz
www.repairtw.com

- Cumulative energization time monitor (**Pr.52**= "20") accumulates energization time from shipment of the inverter every one hour.
- On the actual operation time monitor (**Pr.52** = "23"), the inverter running time is added up every hour. (Time is not added up during a stop.)
- If the number of monitor value exceeds 65535, it is added up from 0. **Pr.563** allows the user to check how many times the cumulative energization time monitor has exceeded 65535h. **Pr.564** allows the use to check how many times the actual operation time monitor has exceeded 65535h.
- Writing "0" in **Pr.171** clears the actual operation time monitor. (The cumulative energization time monitor cannot be cleared.)

REMARKS

- The cumulative energization time does not increase if the power is turned OFF after less than an hour.
- The actual operation time does not increase if the cumulative running time before power OFF is less than an hour.
- If "0" is written to **Pr.171** and **Pr.171** is read again, "9999" is always displayed.Setting "9999" does not clear the actual operation time meter.

(8) Hiding the decimal places for the monitors (Pr.268)

- As the operation panel (FR-DU08) display is 5 digits long, the decimal places may vary during analog input, etc. The decimal places can be hidden by selecting the decimal digits with **Pr.268**.

Pr.268 setting	Description
9999 (initial value)	No function
0	For the first or second decimal places (0.1 increments or 0.01 increments) of the monitor, numbers in the first decimal place and smaller are rounded to display an integral value (1 increments). The monitor value equal to or smaller than 0.99 is displayed as 0.
1	When monitoring with the second decimal place (0.01 increments), the 0.01 decimal place is dropped and the monitor displays the first decimal place (0.1 increments). When monitoring with the first decimal place, the display will not change.

REMARKS

- The number of display digits on the cumulative energization time (**Pr.52** = "20"), actual operation time (**Pr.52** = "23"), cumulative power (**Pr.52** = "25") and cumulative energy saving (**Pr.52** = "51") does not change.

(9) Minus sign display for the monitors (Pr.290)

- Values with minus signs can be output from the terminal AM (analog voltage output) and can be displayed on the operation panel (FR-DU08). For a list of the monitors that can output values with minus signs, refer to the monitor description list (on page 347).

Pr.290 setting	Terminal AM output	Operation panel display	Monitoring via communication
0 (initial value)	—	—	—
1	Output with a minus sign	—	—
2	—	Displayed with minus sign.	—
3	Output with a minus sign	Displayed with minus sign.	—
4	—	—	Displayed with minus sign.
5	Output with a minus sign	—	Displayed with minus sign.
6	—	Displayed with minus sign.	Displayed with minus sign.
7	Output with a minus sign	Displayed with minus sign.	Displayed with minus sign.

—: Output without minus sign (positive values only)

REMARKS

- When terminal AM (analog voltage output) is "output with a minus sign", the output will be within the -10V DC to +10V DC range. Connect the meter with which output level is matched.
- Parameter unit (FR-PU07) displays only positive values.

(10) Monitor filter (Pr.1106 to Pr.1108)

- The response level (filter time constant) of the following monitor indicators can be adjusted.

Pr.	Monitor number	Monitor indicator name
1106	7	Motor torque
	17	Load meter
	32	Torque command
	33	Torque current command
1107	6	Running speed
1108	18	Motor excitation current

上正科技有限公司 購買、維修 此手冊零組件 電話: 037-466333 Email: service@repairtw.com Line id: @zzzz www.repairtw.com

♦ Parameters referred to ♦

Pr.30 Regenerative function selection, Pr.70 special regenerative brake duty ☞ page 593

Pr.37 motor speed display, Pr.144 Speed setting switchover ☞ page 344

Pr.55 Frequency monitoring reference, Pr.56 Current monitoring reference, Pr.866 Torque monitoring reference ☞ page 356

5.11.3 Monitor output to Terminal FM/CA and FM/AM

The monitored statuses can be output as the following items: analog voltage (terminal AM), pulse train (terminal FM) for the FM-type inverter, analog current (terminal CA) for the CA-type inverter.
The signal (monitored item) to be output to terminal FM/CA and terminal AM can be selected.

Pr.	Name	Initial value		Setting range	Description
		FM	CA		
54 **M300**	**FM/CA terminal function selection**	1 (output frequency)		1 to 3, 5 to 14, 17, 18, 21, 24, 32 to 34, 50, 52 to 53, 61, 62, 67, 87 to 90, 92, 93, 95, 97, 98	Select the monitored item to be output to the terminal FM and terminal CA.
158 **M301**	**AM terminal function selection**			1 to 3, 5 to 14, 17, 18, 21, 24, 32 to 34, 50, 52 to 54, 61, 62, 67, 70, 87 to 98	Select the monitored item to be output to the terminal AM.
55 **M040**	**Frequency monitoring reference**	60 Hz	50 Hz	0 to 590 Hz	Set the full-scale value when outputting the frequency monitor value to terminals FM, CA and AM.
56 **M041**	**Current monitoring reference**	Inverter Rated current		0 to 500 A*1 0 to 3600 A*2	Set the full-scale value when outputting the output current monitor value to terminals FM, CA and AM.
866 **M042**	**Torque monitoring reference**	150%		0 to 400%	Set the full-scale value when outputting the torque monitor value to terminals FM, CA and AM.
290 **M044**	**Monitor negative output selection**	0		0 to 7	Set the availability of output with a minus sign for the terminal AM, the operation panel display, or monitoring via communication. (Refer to page 355)
291 **D100**	**Pulse train I/O selection**	0		0	JOG signal*3 / FM output*4
				1	Pulse train input / FM output*4
				10*4	JOG signal*3 / High-speed pulse train output (50% duty)
				11*4	Pulse train input / High-speed pulse train output (50% duty)
				20*4	JOG signal*3 / High-speed pulse train output (ON width fixed)
				21*4	Pulse train input / High-speed pulse train output (ON width fixed)
				100*4	Pulse train input / High-speed pulse train output (ON width fixed) Output the pulse train input without changes.

上正科技有限公司
購買、維修 此手冊零組件
電話： 037-466333
Email: service@repairtw.com
Line id: @zzzz
www.repairtw.com

*1 FR-A820-03160(55K) or lower and FR-A840-01800(55K) or lower.
*2 FR-A820-03800(75K) or more, FR-A840-02160(75K) or more.
*3 Function assigned to **Pr.185 JOG terminal function selection**.
*4 Valid only for the FM type inverters.

(1) Monitor description list(Pr.54, Pr.158)

- Set **Pr.54 FM/CA terminal function selection** for the monitor to be output to the terminal FM (pulse train output) and terminal CA (analog current output).
- Set **Pr.158 AM terminal function selection** for the monitor to be output to the terminal AM (analog voltage output). Output with a negative sign can be made (-10 VDC to +10 VDC) from the terminal AM. **O** in the [Negative (-) output] indicates the output value is negative at the terminal AM. (For setting of the output with/without minus sign, refer to page 346.)
- Refer to the following table and set the monitor to be displayed. (Refer to page 347 for the monitor description.)

Types of monitor	Unit	Pr.54 (FM/CA) Pr.158 (AM) setting	Terminal FM, CA, AM Full-scale value	Negative (-) output	REMARKS
Output frequency	0.01 Hz	1	**Pr.55**		
Output current*2	0.01 A/0.1 A*1	2	**Pr.56**		
Output voltage	0.1 V	3	200 V class: 400 V 400 V class: 800 V		
Frequency setting value	0.01 Hz	5	**Pr.55**		
Running speed	1 (r/min)	6	Value is **Pr.55** converted by **Pr.37, Pr.144**. (Refer to page 344.)		Refer to page 344 for the running speed monitor.
Motor torque	0.1%	7	**Pr.866**	O	
Converter output voltage*2	0.1 V	8	200 V class: 400 V 400 V class: 800 V		
Regenerative brake duty*3	0.1%	9	Brake duty decided by **Pr.30** and **Pr.70**.		
Electronic thermal O/L relay load factor	0.1%	10	Electronic thermal O/L relay operation level (100%)		
Output current peak value	0.01 A/0.1 A*1	11	**Pr.56**		
Converter output voltage peak value	0.1 V	12	200 V class: 400 V 400 V class: 800 V		
Input power	0.01 kW/ 0.1 kW*1	13	Rated inverter power × 2		
Output power*2	0.01 kW/ 0.1 kW*1	14	Rated inverter power × 2		
Load meter	0.1%	17	**Pr.866**		
Motor excitation current	0.0 1 A/0.1 A*1	18	**Pr.56**		
Reference voltage output	——	21	——		Terminal FM: 1440 pulses/s is output when **Pr.291** = 0,1. 50k pulses/s is output when **Pr.291** ≠ 0,1. Terminal CA: output is 20 mA Terminal AM: output is 10 V.
Motor load factor	0.1%	24	200%		
Torque command	0.1%	32	**Pr.866**	O	
Torque current command	0.1%	33	**Pr.866**	O	
Motor output	0.01 kW/ 0.1 kW*1	34	Rated motor capacity		
Energy saving effect	Changeable by parameter setting	50	Inverter capacity		Regarding the energy saving monitor, refer to page 365
PID set point	0.1%	52	100%		Refer to page 492 for the PID control.
PID measured value	0.1%	53	100%		
PID deviation	0.1%	54*4	100%	O	Output with a negative sign (terminal AM)
Motor thermal load factor	0.1%	61	Motor thermal operation level (100%)		
Inverter thermal load factor	0.1%	62	Inverter thermal operation level (100%)		
PID measured value 2	0.1%	67	100%		

上正科技有限公司
購買、維修 此類零組件
電話：037-[illegible]333
Email: service@repairtw.com
Line id: @zzzz
www.repairtw.com

(M) Monitor display and monitor output signal

Types of monitor	Unit	Pr.54 (FM/CA) Pr.158 (AM) setting	Terminal FM, CA, AM Full-scale value	Negative (-) output	REMARKS
PLC function analog output	0.1%	70	100%	O	Refer to page 527 for the PLC function.
Remote output value 1	0.1%	87	100%	O	Refer to page 385 for the analog remote output.
Remote output value 2	0.1%	88	100%		
Remote output value 3	0.1%	89	100%		
Remote output value 4	0.1%	90	100%		
PID manipulated variable	0.1%	91*4	100%	O	Output with a minus sign (terminal AM)
Second PID set point	0.1%	92	100%		Refer to page 492 for the PID control.
Second PID measured value	0.1%	93	100%		
Second PID deviation	0.1%	94*4	200%	O	
Second PID measured value 2	0.1%	95	100%		
Second PID manipulated variable	0.1%	96*4	100%	O	
Dancer main speed setting	0.01 Hz	97	**Pr.55**		Refer to page 503 for the dancer control.
Control circuit temperature	1°C	98	100°C	O	Terminal FM/CA: 0 to 100°C terminal AM: -20 to 100°C

*1 Differs according to capacities. (FR-A820-03160(55K) or lower, FR-A840-01800(55K) or lower /FR-A820-03800(75K) or higher, FR-A840-02160(75K) or higher)

*2 When the output current is less than the specified current level (5% of the rated inverter current), the output current is monitored as 0 A. Therefore, the monitored value of an output current and output power may be displayed as "0" when using a much smaller-capacity motor compared to the inverter or in other instances that cause the output current to fall below the specified value.

*3 Not compatible with the IP55 compatible model.

*4 The setting is available only with terminal AM (**Pr.158**).

上正科技有限公司
購買、維修 此手冊零組件
電話： 037-466333
Email: service@repairtw.com
Line id: @zzzz
www.repairtw.com

(2) Frequency monitor reference (Pr.55)

- Set the full-scale value for outputting the monitored items of output frequency, frequency setting value, and Dancer main speed setting to the terminals FM, CA and AM.

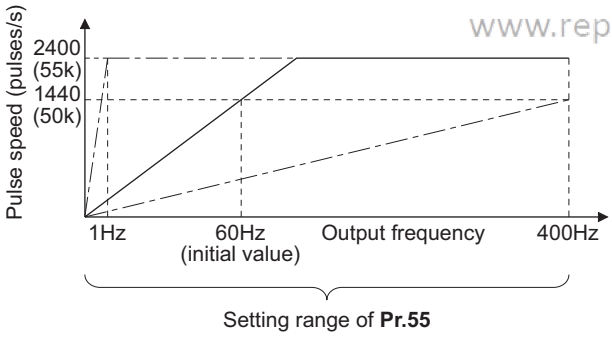

- For the FM-type inverters, set the full-scale value of the connected meter when the pulse speed of terminal FM is 1440 pulses/s (50k pulses/s). Set the frequency to be indicated as the full scale value on the frequency meter (1 mA analog meter) connected between terminal FM and SD. (For example, 60 Hz or 120 Hz.) Pulse speed is proportional to the output frequency of the inverter. (Maximum pulse train output is 2400 pulses/s (55k pulses/s).)

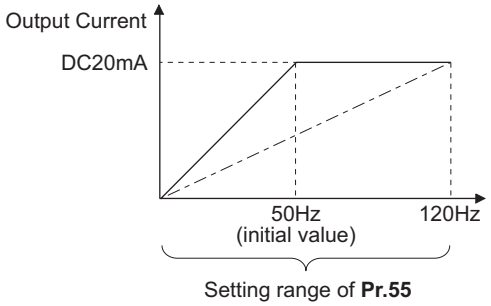

- For the CA-type inverters, set the full-scale value of the connected meter when output current of terminal CA is 20 mA. Set the frequency to be indicated as the full scale value on the meter (20 mA DC ammeter connected between terminal CA and 5; for example, 60 Hz or 120 Hz. Output current is proportional to the frequency. (The maximum output current is 20 mA DC.)

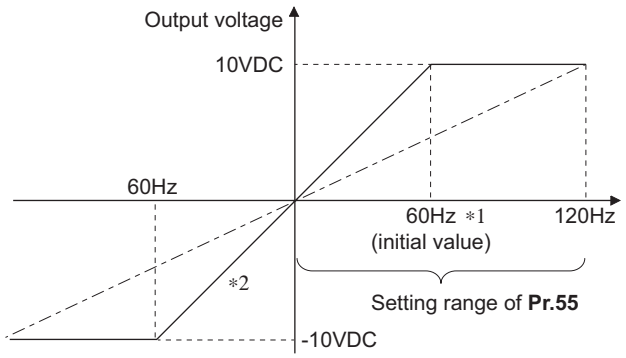

- For the calibration of terminal AM, set the full-scale value of the connected meter when output voltage of terminal FM is 10 VDC. Set the frequency to be indicated as the full scale value on the meter (10 VDC voltmeter) connected between terminal AM and 5. (For example, 60 Hz or 120 Hz) Output voltage is proportional to the frequency. (The maximum output voltage is 10 VDC.)

∗1 FM type: 60 Hz; CA type: 50 Hz

∗2 Output with a negative sign available when **Pr.290 Monitor negative output selection** = "1, 3"

(3) Current monitor reference (Pr.56)

- Output current, Output current peak value, Motor excitation current and monitor from the terminals FM, CA and AM.
- For the FM-type inverters, set the full-scale value of the connected meter when the pulse speed of terminal FM is 1440 pulses/s (50k pulses/s).
  Set the current to be indicated as the full scale value to the meter (1 mA analog meter) connected between terminal FM and SD.
  Pulse speed is proportional to the monitored value of output current. (Maximum pulse train output is 2400 pulses/s (55k pulses/s).)
- For the CA-type inverters, set the full-scale value of the connected current meter when output current of terminals CA is 20 mA. Set the current to be indicated as the full scale value on the meter (20 mADC ammeter) connected between terminals CA and 5.Output current is proportional to the monitored value of output current. (The maximum output current is 20 mADC.)
- For the calibration of terminal AM, set the full-scale value of the connected current meter when the output voltage of terminal AM is 10 VDC.
  Set the current to be indicated as the full scale value on the meter (10 VDC voltmeter) connected between terminal AM and 5.
  Output voltage is proportional to the monitored value of output current. (The maximum output voltage is 10 VDC.)

上正科技有限公司
購買、維修 此手冊零組件
電話： 037-466333
Email: service@repairtw.com
Line Id: @zzzz
www.repairtw.com

(4) Torque monitor reference (Pr.866)

- Set the full scale value when outputting the current monitor from terminal the FM, CA or AM.
- For the FM-type inverters, set the full-scale value of the connected torque meter when the pulse speed of terminal FM is 1440 pulses/s (50k pulses/s). Set the torque to be indicated as the full scale value on the meter (1 mA analog meter) connected between terminals FM and SD.
  Pulse speed is proportional to the monitored value of torque. (Maximum pulse train output is 2400 pulses/s (55k pulses/s).)
- For the CA-type inverters, set the full-scale value of the connected torque meter when output current of the terminal CA is 20 mADC.
  Set the torque to be indicated as the full scale value on the meter (20 mADC ammeter) connected between terminals CA and 5.
  Output current is proportional to the monitored value of torque. (The maximum output voltage is 20 mADC.)
- For the calibration of terminal AM, set the full-scale value of the connected torque meter when the output voltage of terminal AM is at 10 VDC.
  Set the torque to be indicated as the full scale value on the meter (10 VDC voltmeter) connected between terminal AM and 5.
  Output voltage is proportional to the monitored value of torque. (The maximum output voltage is 10 VDC.)

(5) Terminal FM pulse train output (Pr.291)

- Two kinds of pulse trains can be output to the terminal FM.

FM output circuit

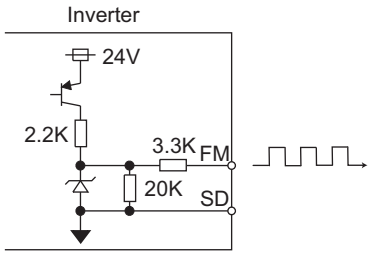

- When **Pr.291 Pulse train I/O selection** = "0 (initial value) or 1", this is FM output with a maximum output of 8 VDC and 2400 pulses/s.
  The pulse width can be adjusted by using the operation panel or parameter unit and calibration parameter **C0(Pr.900) FM/CA terminal calibration**.
- Commands can be sent (such as inverter output frequency) by connecting a 1 mA full-scale DC ammeter or a digital meter.

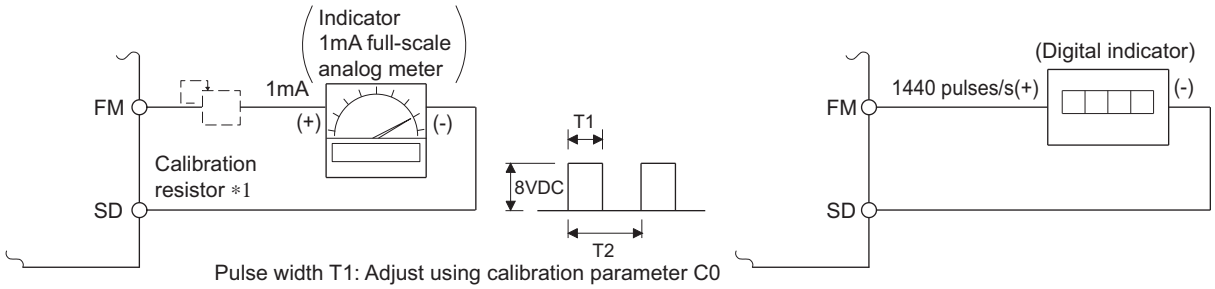

Pulse width T1: Adjust using calibration parameter C0
Pulse cycle T2: Set with **Pr.55** (frequency monitor)
Set with **Pr.56** (current monitor)

∗1 Not needed when the operation panel (FR-DU08) or parameter unit (FR-PU07) is used for calibration.
Use a calibration resistor when the indicator (frequency meter) needs to be calibrated by a neighboring device because the indicator is located far from the inverter.
However, the frequency meter needle may not deflect to full-scale if the calibration resistor is connected. In this case, calibrate additionally with the operation panel or parameter unit.

∗2 In the initial setting, 1 mA full-scale and 1440 pulses/s terminal FM are used at 60 Hz.

上正科技有限公司
購買、維修 此手冊零組件
電話： 037-466333
Email: service@repairtw.com
Line id: @zzz
www.repairtw.com

High-speed pulse train output circuit (example of connection to pulse counter)

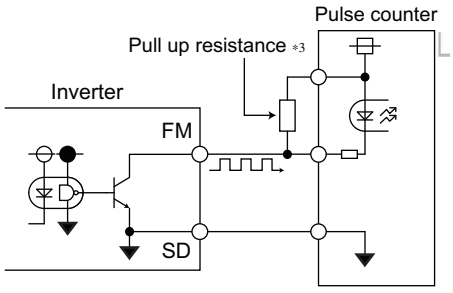

- When **Pr.291 Pulse train I/O selection** = "10, 11, 20, 21, 100", this is high-speed pulse train output for open collector output. A maximum pulse train of 55k pulses/s is outputted.
  There are two types of pulse width: "50% duty" and "fixed ON width"; this cannot be adjusted with the calibration parameter **C0 (Pr.900) FM/CA terminal calibration.**

∗3 The pulses may weaken due to stray capacitance in the wiring if the wiring is long, and the pulse counter will be unable to recognize the pulses. Connect the open collector output to the power source with a pull-up resistor if the wiring is too long. Check the pulse counter specs for the pull-up resistance. The resistance should be at 80 mA of the load current or less.

Pulse of Pr.291 = "10, 11"



- When **Pr.291** = "10, 11", the pulse cycle is 50% duty (ON width and OFF width are the same).

Pulse of Pr.291 = "20, 21, 100"



- When **Pr.291** = "20, 21, 100", the pulse ON width is output at a fixed width (approx. 10 μs).
- At the "100" setting, the same pulse train from the pulse train input (terminal JOG) will be outputted. This is used when running at a synchronized speed with more than one inverter. (Refer to **page 315**.)

∗4 "HIGH" indicates when the open collector output transistor is OFF.

Item	High-speed pulse train output specifications
Output method	NPN open collector output
Voltage between collector-emitter	30 V (max.)
Maximum permissible load current	80 mA
Output pulse rate	0 to 55 kpps∗1
Output resolution	3 pps (excluding jitter)

∗1 50 kpps when the monitor output value is 100%.

REMARKS

- Terminal JOG input specifications (pulse train input or contact input) can be selected with **Pr.291**. When changing the setting value, be careful not to change the terminal JOG input specifications. (Refer to page 315 for pulse train input.)
- Connect a meter between the terminals FM and SD after changing the **Pr.291** setting value. When using the pulse train of FM output (voltage output), be careful that voltage is not added to terminal FM.
- A connection cannot be made to the pulse input of a source logic type.
- If all parameter clear is performed when selecting the high-speed pulse train output (**Pr.291** = "10, 11, 20, 21, 100"), the terminal FM output can be changed from high-speed pulse train output to FM output (voltage output), since the **Pr.291** setting value returns to the initial value of "0".
  Perform all parameter clear after removing the device connected to the terminal FM.

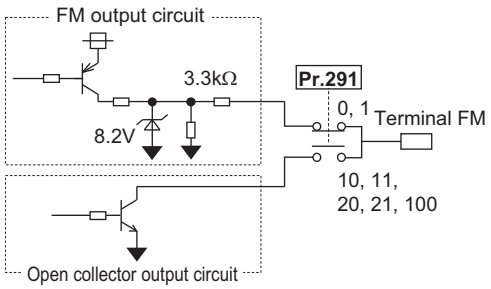

5.11.4 Monitor display selection for terminals FM/CA and FM/AM

By using the operation panel or parameter unit, terminals FM, CA and AM can be adjusted (calibrated) to the full scale.

Pr.	Name	Initial value	Setting range	Description
C0 (900)*1 M310	FM/CA terminal calibration	—	—	Calibrates the scale of the meter connected to terminals FM and CA.
C1 (901)*1 M320	AM terminal calibration	—	—	Calibrates the scale of the analog meter connected to terminal AM.
C8 (930)*1 M330	Current output bypass signal	0%	0 to 100%	Set the signal value at the minimum analog current output.
C9 (930)*1 M331	Current output bypass current	0%	0 to 100%	Set the current value at the minimum analog current output.
C10 (931)*1 M332	Current output gain signal	100%	0 to 100%	Sets the signal value when the analog current output is at maximum.
C11 (931)*1 M333	Current output gain current	100%	0 to 100%	Set the current value at the maximum analog current output.
867 M321	AM output filter	0.01 s	0 to 5 s	Set the terminal AM output filter.
869 M334	Current output filter	0.01 s	0 to 5 s	Set the terminal AM output filter.

上正科技有限公司
購買、維修 此手冊零組件
電話： 037-466333
Email: service@repairtw.com
Line id: @zzzz
www.repairtw.com

*1 The parameter number in parentheses ( ) is the one for use with the parameter unit (FR-PU07).

(1) Terminal FM calibration(C0(Pr.900))

- The terminal FM is preset to output pulses. By setting **C0 (Pr.900)**, the meter connected to the inverter can be calibrated by parameter setting without use of a calibration resistor.
- Using the pulse train output of the terminal FM, a digital display can be provided to connect a digital counter.The monitor value is 1440 pulses/s output at the full-scale value of the monitor description list (on page 347) **(Pr.54 FM/CA terminal function selection)**.

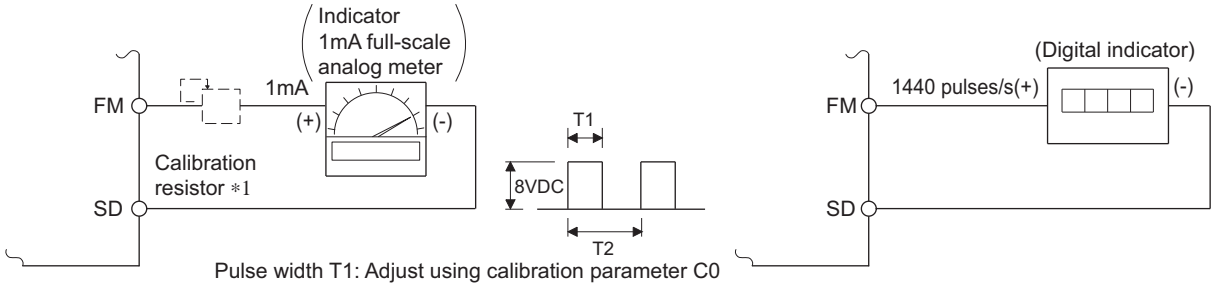

Pulse width T1: Adjust using calibration parameter C0
Pulse cycle T2: Set with **Pr.55** (frequency monitor)
Set with **Pr.56** (current monitor)

*1 Not needed when the operation panel (FR-DU08) or parameter unit (FR-PU07) is used for calibration.
Use a calibration resistor when the indicator (frequency meter) needs to be calibrated by a neighboring device because the indicator is located far from the inverter.
However, the frequency meter needle may not deflect to full-scale if the calibration resistor is connected.In this case, perform calibration using the operation panel or parameter unit.

*2 In the initial setting, 1 mA full-scale and 1440 pulses/s terminal FM are used at 60 Hz.

(M) Monitor display and monitor output signal

- Calibrate the terminal FM in the following procedure.

1) Connect an indicator (frequency meter) across terminals FM and SD of the inverter. (Note the polarity. The terminal FM is positive.)

2) When a calibration resistor has already been connected, adjust the resistance to "0" or remove the resistor.

3) Refer to the monitored item list (page 347) and set **Pr.54**.
When the running frequency or inverter output current is selected on the monitor, set the running frequency or current value at which the output signal will be 1440 pulses/s, using **Pr.55 Frequency monitoring reference** or **Pr.56 Current monitoring reference** beforehand. Normally, at 1440 pulses/s the meter deflects to full-scale.

4) If the meter needle does not point to maximum even at maximum output., calibrate it with **C0(Pr.900)**.

REMARKS

- When outputting such an item as the output current, which cannot reach a 100% value easily by operation, set **Pr.54** to "21" (reference voltage output) and calibrate. 1440 pulses/s are output from the terminal FM.
- When **Pr.310 Analog meter voltage output selection** = "21", the terminal FM calibration cannot be performed. For the details of **Pr.310**, refer to the Instruction Manual of FR-A8AY.
- The wiring length of the terminal FM should be 200 m at maximum.
- The initial value of the calibration parameter **C0(Pr.900)** is set to 1 mA full-scale and 1440 pulses/s terminal FM pulse train output at 60 Hz. The maximum pulse train output of terminal FM is 2400 pulses/s.
- When connecting a frequency meter between terminals FM-SD and monitoring the running frequency, it is necessary to change **Pr.55** to the maximum frequency, since the FM terminal output will be saturated at the initial value when the maximum frequency reaches 100 Hz or greater.
- Calibration with the calibration parameter **C0(Pr.900)** cannot be done when **Pr.291** Pulse train I/O selection = "10, 11, 20, 21, 100" (high-speed pulse train output).

(2) Calibration procedure for terminal FM when using the operation panel (FR-DU08)

Operation

1. Screen at power-ON
The monitor display appears.

2. Changing the operation mode
Press PU EXT to choose the PU operation mode. [PU] indicator is lit.
Calibration is also possible in the External operation mode.

3. Parameter setting mode
Press MODE to choose the parameter setting mode. (The parameter number read previously appears.)

4. Calibration parameter selection
Turn the dial until C. . . . appears. Press SET to display C -- -- -- .

5. Selecting the parameter number
Turn the dial until C 0 (**C0(Pr.900) FM/CA terminal calibration**) appears. Press SET to enable the parameter setting. The monitored value of the item (initially the output frequency) selected by **Pr.54 FM/CA terminal function selection** will appear.

6. Pulse output via terminal FM
If stopped, press FWD or REV to start the inverter operation. (To monitor the output frequency, motor connection is not required.
Calibration is also possible in a stop status.

7. Scale adjustment
Turn the dial to move the meter needle to a desired position.

8. Setting completed
Press SET to enter the setting. The monitored value and C 0 flicker alternately.
- Turn the dial to read another parameter.
- Press SET to return to the C -- -- -- -- display.
- Press SET twice to show the next parameter.

上正科技有限公司
購買、維修 此手冊零組件
電話： 037-466333
Email: service@repairtw.com
Line id: @zzzz
www.repairtw.com

REMARKS

- Calibration can also be made for the External operation.Set the frequency in the External operation mode, and make calibration in the above procedure.
- Calibration can be performed during operation.
- For the operation from the parameter unit (FR-PU07), refer to the Instruction Manual of the parameter unit.

(3) Terminal CA calibration (C0(Pr.900), C8(Pr.930) to C11(Pr.931))

- Terminal CA is initially set to provide a 20 mADC output in the full-scale state of the corresponding monitor item. **Calibration parameter C0(Pr.900)** allows the output current ratio (gains) to be adjusted according to the meter scale.Note that the maximum output current is 20 mADC.
- Set a value at the minimum current output in the calibration parameters **C8(Pr.930)** and **C9(Pr.930)**. Calibration parameter **C10(Pr.931)** and **C11(Pr.931)** are used to set a value at the maximum current output.
- Set the output signal values (output monitor set with **Pr.54**) at zero and at the maximum current output from the terminal CA (using calibration parameters **C8(Pr.930)** and **C10(Pr.931)**. The full scale for each monitor is 100% at this time.
- Set the output current values (output monitor set with **Pr.54**) at zero and at the maximum current output from the terminal CA (using calibration parameters **C9(Pr.930)** and **C11(Pr.931)**. The output current calibrated by calibration parameter **C0(Pr.900)** is 100% at this time.

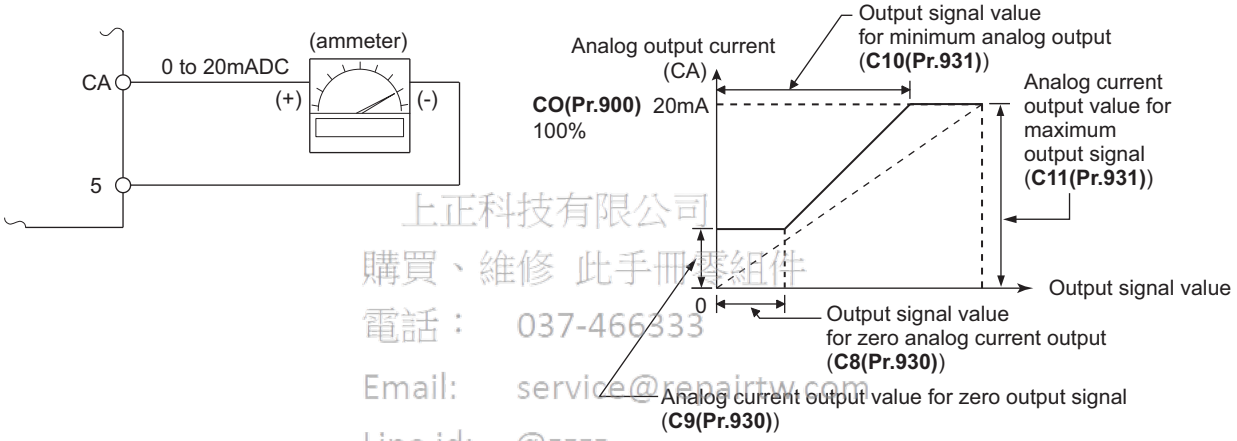

上正科技有限公司
購買、維修 此手冊零組件
電話： 037-466333
Email: service@repairtw.com
Line id: @zzzz
www.repairtw.com

- Calibrate the terminal CA in the following procedure.
  1) Connect a 0-20 mADC indicator (frequency meter) across terminals CA and 5 of the inverter. (Note the polarity.The terminal CA is positive.)
  2) Set the initial value of calibration parameter **C8(Pr.930)** to **C11(Pr.931)**. If the meter needle does not indicate zero when the current input is at zero, calibrate the meter using **C8(Pr.930)** and **C9(Pr.930)**.
  3) Refer to the monitor description list (page 357) and set **Pr.54**.
     When the running frequency or inverter output current is selected on the monitor, set the running frequency or current value at which the output signal will be 20 mA, using **Pr.55** or **Pr.56** beforehand.
  4) If the meter needle does not point to maximum even at maximum output, calibrate it with **C0(Pr.900)**.

REMARKS

- When outputting such an item as the output current, which cannot reach a 100% value easily by operation, set **Pr.54** to "21" (reference voltage output) and calibrate.20 mADC is output from the terminal CA.
- When **Pr.310 Analog meter voltage output selection** = "21", the terminal CA calibration cannot be performed. For the details of **Pr.310**, refer to the Instruction Manual of FR-A8AY.
- Output is possible from terminal CA even if **C8(Pr.930)** ≥ **C10(Pr.931)**, **C9(Pr.930)** ≥ **C11(Pr.931)**.

(4) Adjusting the response of terminal CA (Pr.869)

- Using **Pr.869**, the output voltage response of the terminal CA can be adjusted in the range of 0 to 5 s.
- Increasing the setting stabilizes the terminal CA output more but reduces the response level. (Setting "0" sets the response level to 7 ms.)

(5) Calibration of terminal AM (C1(Pr.901))

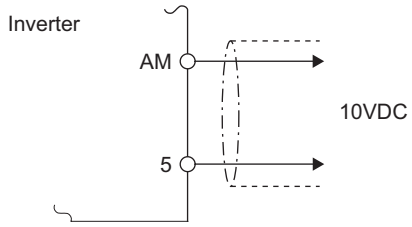

- Terminal AM is initially set to provide a 10 VDC output in the full-scale state of the corresponding monitor item. **Calibration parameter C1 (Pr.901)** allows the output voltage ratio (gains) to be adjusted according to the meter scale. Note that the maximum output voltage is 10 VDC.

- Calibrate the AM terminal in the following procedure.
  1) Connect a 0-10 VDC indicator (frequency meter) across terminals AM and 5 of the inverter.(Note the polarity. The terminal AM is positive.)
  2) Refer to the monitor description list (page 347) and set **Pr.158 AM terminal function selection**.
  When the running frequency or inverter output current is selected on the monitor, set the running frequency or current value at which the output signal will be 10 V, using **Pr.55** or **Pr.56** beforehand.
  3) If the meter needle does not point to maximum even at maximum output., calibrate it with **C1(Pr.901)**.

REMARKS

- When outputting such an item as the output current, which cannot reach a 100% value easily by operation, set **Pr.54** to "21" (reference voltage output) and calibrate.10 VDC is output from the terminal AM.
- When **Pr.306 Analog output signal selection** = "21", the terminal AM calibration cannot be performed. For the details of **Pr.306**, refer to the Instruction Manual of FR-A8AY.
- Use **Pr.290 Monitor negative output selection** to enable negative output from the terminal AM. When this is set, the output voltage range will be -10 VDC to +10 VDC. Calibrate the terminal AM with the maximum positive output value.

上正科技有限公司
購買、維修 此手冊零組件
電話： 037-466333
Email: service@repairtw.com
Line id: @zzzz
www.repairtw.com

(6) Adjusting the response of terminal AM (Pr.867)

- Using **Pr.867**, the output voltage response of the terminal AM can be adjusted in the range of 0 to 5 s.
- Increasing the setting stabilizes the terminal AM output more but reduces the response level. (Setting "0" sets the response level to 7 ms.)

♦ Parameters referred to ♦

Pr.54 FM/CA terminal function selection ☞ page 356
Pr.55 Frequency monitoring reference ☞ page 356
Pr.56 Current monitoring reference ☞ page 356
Pr.158 AM terminal function selection ☞ page 356
Pr.290 Monitor negative output selection ☞ page 356
Pr.291 Pulse train I/O selection ☞ page 315

5.11.5 Energy saving monitor

From the estimated consumed power during commercial power supply operation, the energy saving effect by use of the inverter can be monitored and output.

Pr.	Name	Initial value	Setting range	Description
52 M100	Operation panel main monitor selection	0 (output frequency)	Refer to page 346	50: Power saving monitor 51: Cumulative power saving monitor
774 M101	Operation panel monitor selection 1	9999		
775 M102	Operation panel monitor selection 2			
776 M103	Operation panel monitor selection 3			
992 M104	Operation panel setting dial push monitor selection	0 (set frequency)		
54 M300	FM/CA terminal function selection	1 (output frequency)	Refer to page 356	50: Power saving monitor
158 M301	AM terminal function selection			
891 M023	Cumulative power monitor digit shifted times	9999	0 to 4	Set the number of times to shift the cumulative power monitor digit. The monitored value is clamped at the maximum value.
			9999	No shift. The monitored value is cleared when it exceeds the maximum value.
892 M200	Load factor	100%	30 to 150%	Set the load factor for the commercial power supply operation. This is multiplied by the power consumption rate (page 368) during commercial power supply operation.
893 M201	Energy saving monitor reference (motor capacity)	Rated inverter current*1	0.1 to 55 kW*2	Set the motor capacity (pump capacity). Set when calculating the power saving power rate, average power saving rate, and power during commercial power supply operation.
			0 to 3600 kW*2	
894 M202	Control selection during commercial power-supply operation	0	0	Discharge damper control (fan)
			1	Inlet damper control (fan)
			2	Valve control (pump)
			3	Commercial power supply drive (fixed value)
895 M203	Power saving rate reference value	9999	0	Consider the value during commercial power supply operation as 100%.
			1	Consider **Pr.893** setting as 100%.
			9999	No function
896 M204	Power unit cost	9999	0 to 500	Set the power unit cost. The power cost savings are displayed on the energy saving monitor.
			9999	No function
897 M205	Power saving monitor average time	9999	0	Average of 30 minutes
			1 to 1000 h	Average of the set time
			9999	No function
898 M206	Power saving cumulative monitor clear	9999	0	Cumulative monitor value clear
			1	Cumulative monitor value hold
			10	Continue accumulation (communication data upper limit 9999)
			9999	Continue accumulation (communication data upper limit 65535)
899 M207	Operation time rate (estimated value)	9999	0 to 100%	This value is used for calculating the annual power saving amount. Set the annual operation ratio (consider 365 days × 24h as 100%).
			9999	No function

上正科技有限公司
購買、維修 此手冊零組件
電話： 037-466333
Email: service@repairtw.com
Line id: @zzz
www.repairtw.com

*1 Performing IPM parameter initialization changes the settings. (Refer to page 170.)

*2 For the FR-A820-03160(55K) or lower, and FR-A840-01800(55K)or lower.

*3 For the FR-A820-03800(75K) or higher, and FR-A840-02160(75K)or higher.

(M) Monitor display and monitor output signal

(1) Energy saving monitor list

- The items that can be monitored on the power saving monitor (**Pr.52, Pr.54, Pr.158, Pr.774 to Pr.776, Pr.992** = "50") are indicated below.
  (Only [1 Power saving] and [3 Average power saving] can be set to **Pr.54** (terminal FM, terminal CA) **and Pr.158** (terminal AM).)

	Energy saving monitored item	Description and formula	Increment	Parameter setting			
				Pr.895	Pr.896	Pr.897	Pr.899
1	**Power saving**	The difference between the estimated value of the required power during commercial power supply operation and the input power calculated with the inverter. **Power supply during commercial power supply operation - input power monitor**	0.01 kW/ 0.1 kW*3	9999	—	9999	—
2	**Power saving rate**	The power saving ratio with the commercial power supply operation as 100%. $\frac{\text{[1 Power saving]}}{\text{Power during commercial power supply operation}} \times 100$	0.1%	0			
		The power saving ratio with **Pr.893** as 100%. $\frac{\text{[2 Power saving]}}{\text{Pr.893}} \times 100$		1			
3	**Average power saving**	The average power saving per hour during a predetermined time **(Pr.897)**. $\frac{\sum (\text{[1 Power saving]} \times \Delta t)}{\text{Pr.897}}$	0.01 kWh/ 0.1 kWh*3	9999	9999	0 to 1000 h	
4	**Average power saving rate**	The average power saving ratio with the commercial power supply operation as 100%. $\frac{\sum (\text{[2 Power saving rate]} \times \Delta t)}{\text{Pr.897}} \times 100$	0.1%	0			
		The average power saving ratio with **Pr.893** as 100%. $\frac{\text{[3 Average power saving]}}{\text{Pr.893}} \times 100$		1			
5	**Average power cost savings**	The average power saving in terms of cost. **[3 Average power saving]** × **Pr.896**	0.01/0.1*3	-	0 to 500		

上正科技有限公司
購買、維修 此手冊零組件
電話： 037-466333
Email: service@repairtw.com
Line Id: @2222
www.repairtw.com

- The items that can be monitored on the cumulative energy saving monitor (**Pr.52, Pr.774 to Pr.776, Pr.992** = "51") are indicated below.
  (The monitor value of the cumulative monitor can be shifted to the right with **Pr.891 Cumulative power monitor digit shifted times**.)

	Energy saving monitored item	Description and formula	Increment	Parameter setting			
				Pr.895	Pr.896	Pr.897	Pr.899
6	**Power saving amount**	The cumulative power saving is added up per hour. **∑([1 Power saving]** × **Δt)**	0.01 kWh/ 0.1 kWh *1*2*3	—	9999	—	9999
7	**Power cost saving**	The power saving amount in terms of cost. **[6 Power saving amount]** × **Pr.896**	0.01/0.1 *1*3	—	0 to 500		
8	**Annual power saving amount**	Estimated value of annual power saving amount. $\frac{\text{[6 Power saving amount]}}{\text{Operation time during power saving accumulation}} \times 24 \times 365 \times \frac{\text{Pr.899}}{100}$	0.01 kWh/ 0.1 kWh *1*2*3	—	9999		0 to 100%
9	**Annual power cost savings**	Annual power saving amount in terms of cost. **[8 Annual power saving amount]** × **Pr.896**	0.01/0.1 *1*3	—	0 to 500		

*1 For communication, (RS-485 communication, communication option), the display increments are 1. For example, "10.00 kWh" is displayed as "10" for communication data.
*2 When using the parameter unit (FR-PU07), "kW" is displayed
*3 The increment differs according to capacities. (FR-A820-03160(55K) or lower, FR-A840-01800(55K) or lower / FR-A820-03800(75K) or higher, FR-A840-02160(75K) or higher.)

REMARKS

- The operation panel (FR-DU08) and parameter unit (FR-PU07) has a 5-digit display. This means, for example, that when a monitor value in 0.01 units exceeds "999.99", the decimal place is moved up as in "1000.0" and the display changes to 0.1 units. The maximum display number is "99999".
- The maximum value for communication (RS-485 communication, communication option) when **Pr.898 Power saving cumulative monitor clear** = "9999" is "65535". The maximum value for the 0.01-unit monitor is "655.35", and the maximum value for the 0.1-unit monitor is "6553.5".

(2) Power saving real-time monitor ([1 Power saving] and [2 Power saving rate])

- On the [1 Power saving monitor], an energy saving effect as compared to the consumed power during commercial power supply operation (estimated value) is calculated and displays on the main monitor.
- In the following cases, the [1 Power saving monitor] indicates "0".
  (a) Calculated values of the power saving monitor are negative values.
  (b) During DC injection brake operation.
  (c) The motor is not connected (output current monitor is 0A).
- On the [2 Power saving rate monitor], the power saving rate considering the consumed power during the power supply operation (estimated value) as 100% is displayed. **Pr.895 Power saving rate reference value** needs to be set to "0". Energy saving monitor reference (motor capacity)

(3) Average power saving monitor ([3 Average power saving], [4 Average power saving rate], [5 Average power cost savings])

- The average power saving monitors are displayed by setting a value other than 9999 in **Pr.897 Power saving monitor average time**.
- On the [3 Average power saving monitor], average power saving amount for each average time period s displayed.
- When **Pr.897** is set, the average value is updated each time the average time period elapses, with the power-ON or inverter reset as the starting point.
  The power savings average value update timing signal (Y92) is inverted every time the average value is updated.

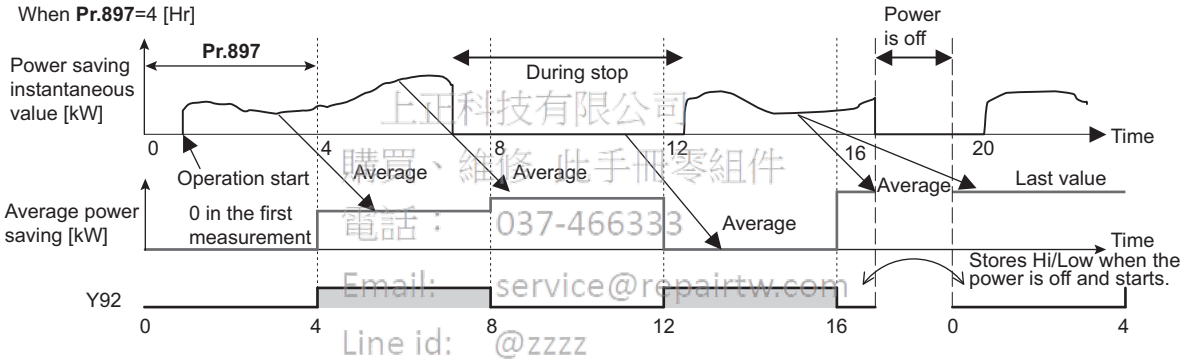

上田科技有限公司
購買、維修 此手冊零組件
電話： 037-466333
Email: service@repairtw.com
Line id: @zzzz
www.repairtw.com

- When **Pr.895 Power saving rate reference value** the [2 Average power saving rate] for the averaging time period is displayed on the [4 Average power saving rate] monitor.
- When the power cost per 1 kWh power amount is set in **Pr.896 Power unit cost**, the cost of the saved power ([3 Average power saving] × **Pr.896**) is displayed on the [5 Average power cost savings].

(M) Monitor display and monitor output signal

(4) Cumulative energy saving monitors ([6 Power saving amount], [7 Power cost saving], [8 Annual power saving amount], [9 Annual power saving savings]).

- On the cumulative energy saving cumulative monitors, the monitor data digit can be shifted to the right by the number of **Pr.891 Cumulative power monitor digit shifted times**. setting. For example, if the cumulative power value is 1278.56 kWh when **Pr.891** = "2", the PU/DU display is 12.78 (display in 100 kWh increments) and the communication data is 12. If the maximum value is exceeded when Pr.891 = "0 to 4", the value is clamped at the maximum value, indicating that a digit shift is necessary. If the maximum value is exceeded when **Pr.891** = "9999", the value returns to 0, and the counting starts again. In other monitors, the value is clamped at the displayed maximum value.
- The [6 Cumulative power saving amount] monitor (6)] can measure the power during a predetermined period. Measure with the following procedure.
  1) Write "9999" or "10" in **Pr.898 Power saving cumulative monitor clear**.
  2) Write "0" in **Pr.898** at the measurement start time to clear the power saving cumulative monitor value and start power saving accumulation.
  3) Write "1" in **Pr.898** at the measurement end time to hold the power saving cumulative monitor value.

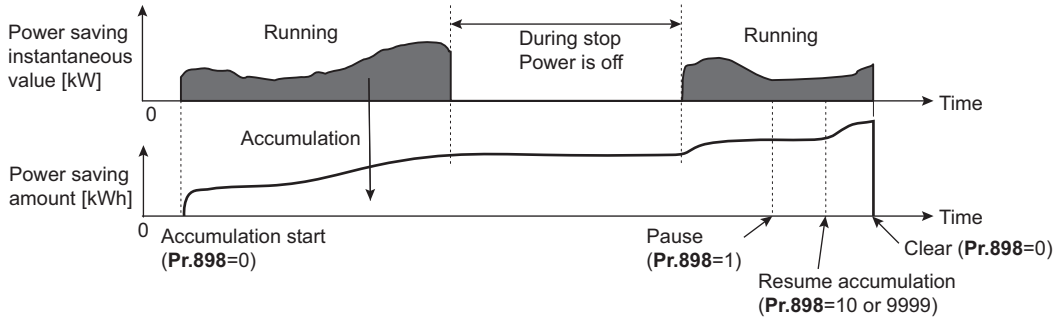

REMARKS

- The power saving cumulative monitor value is saved every hour. This means that if the power is turned OFF after less than an hour, when then the power is turned ON again, the previously saved monitor value is displayed, and accumulation starts. (In some cases, the cumulative monitor value may go down.)

上正科技有限公司
購買 維修 此手冊零組件
電話： 037-466333
Email: service@repairtw.com
Line Id: @zzzz
www.repairtw.com

(5) Estimated power value in commercial power supply operation (Pr.892, Pr.893, Pr.894)

- Select the pattern for commercial power supply operation from the four patterns of discharge damper control (fan), suction damper control (fan), valve control (pump) and commercial power drive, and set it in **Pr.894 Control selection during commercial power-supply operation**.
- Set the motor capacity (pump capacity) in **Pr.893 Energy saving monitor reference (motor capacity)**.
- As shown below, the consumed power ratio (%) during commercial power supply operation is estimated from the rotations per minute ratio for each operation pattern and rating (current output frequency/**Pr.3 Base frequency**).

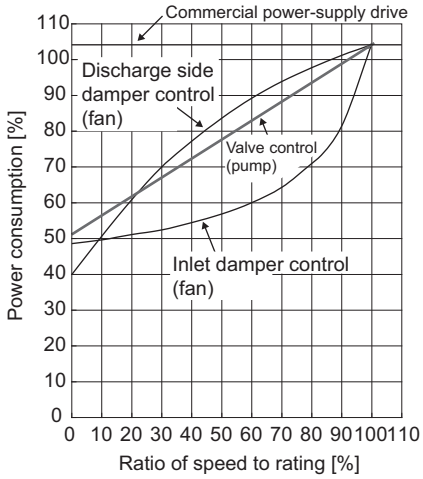

- The estimated value of the consumed power during commercial power supply operation (kW) is calculated from the motor capacity set in **Pr.893** and **Pr.892 Load factor** with the following formula.

$$\text{Estimated consumed power during commercial power supply operation (kW)} = \text{Pr.893 (kW)} \times \frac{\text{Consumed power (\%)}}{100} \times \frac{\text{Pr.892 (\%)}}{100}$$

REMARKS

- In commercial power supply operation, because the rotations per minute cannot rise higher than the power supply frequency, if the output frequency rises to **Pr.3 Base frequency** or higher, it stays at a constant value.

(6) Annual power saving amount and power cost savings (Pr.899)

- When the operation time rate [%] (ratio of time in year that the inverter actually drives the motor) is set in **Pr.899**, the annual energy saving effect can be estimated.
- When the operation pattern is determined to a certain extent, the estimated value of the annual power saving amount can be calculated by measuring the power saving in a certain measurement period.
- Refer to the following to set the operation time rate.

1)Estimate the average time of operation per day [h/day].

2)Calculate the number of operation days per year [days/year]. (Average number of operation days per month × 12 months)

3)Calculate the annual operation time [h/year] from **1)** and **2)**.

Annual operation time (h/year) = average time (h/day) × number of operation days (days/year)

4)Calculate the operation time rate and set it in **Pr.899**.

$$\text{Operation time rate (\%)} = \frac{\text{Annual operation time (h/year)}}{\text{24 (h/day)} \times \text{365 (days/year)}} \times 100\ (\%)$$

REMARKS

- Setting example for operation time rate: When operation is performed about 21h per day for an average 16 operation days per month,

Annual operation time = 21 (h/day) × 16 (days/month) × 12 months = 4032 (h/year)

$$\text{Operation time rate (\%)} = \frac{4032\ (\text{h/year})}{24\ (\text{h/day}) \times 365\ (\text{days/year})} \times 100(\%) = 46.03\%$$

Set 46.03% in **Pr.899**.

上正科技有限公司
購買、維修 此手冊零組件
電話： 037-466333
Email: service@repairtw.com
Line Id: @z222
www.repairtw.com

- Calculate the annual power saving amount from **Pr.899 Operation time rate (estimated value)** and the average power saving monitor.

$$\text{Annual power saving amount (kWh/year)} = \begin{array}{c}\text{With Pr.898 = 10 or 9999,}\\ \text{average power saving (kW) during cumulative}\end{array} \times 24\text{h} \times 365\ \text{days} \times \frac{\text{Pr.899}}{100}$$

- When the power cost per hour is set in **Pr.896 Power unit cost**, the annual power cost savings can be monitored.

Annual power cost saving = annual power saving amount (kWh/year) × Pr.896

REMARKS

- During regenerative driving, make calculation on the assumption that "power saving = power during commercial power supply operation (input power = 0)".

♦ Parameters referred to ♦

Pr.3 Base frequency ☞ page 578
Pr.52 Operation panel main monitor selection ☞ page 346
Pr.54 FM/CA terminal function selection ☞ page 356
Pr.158 AM terminal function selection ☞ page 356

5.11.6 Output terminal function selection

Use the following parameters to change the functions of the open collector output terminals and relay output terminals.

Pr.	Name		Initial value	Initial set signal	Setting range
190 M400	RUN terminal function selection	Open collector output terminal	0	RUN (Inverter running)	0 to 8, 10 to 20, 22, 25 to 28, 30 to 36, 38 to 54, 56, 57, 60, 61, 63, 64, 68, 70, 79, 84, 85, 90 to 99, 100 to 108, 110 to 116, 120, 122, 125 to 128, 130 to 136, 138 to 154, 156, 157, 160, 161, 163, 164, 168, 170, 179, 184, 185, 190 to 199, 200 to 208, 300 to 308, 9999
191 M401	SU terminal function selection		1	SU (Up to frequency)	
192 M402	IPF terminal function selection		2	IPF (Instantaneous power failure/undervoltage)	
193 M403	OL terminal function selection		3	OL (Overload warning)	
194 M404	FU terminal function selection		4	FU (Output frequency detection)	
195 M405	ABC1 terminal function selection	Relay output terminal	99	ALM (Fault)	0 to 8, 10 to 20, 22, 25 to 28, 30 to 36, 38 to 54, 56, 57, 60, 61, 63, 64, 68, 70, 79, 84, 85, 90, 91, 94 to 99, 100 to 108, 110 to 116, 120, 122, 125 to 128, 130 to 136, 138 to 154, 156, 157, 160, 161, 163, 164, 168, 170, 179, 184, 185, 190, 191, 194 to 199, 200 to 208, 300 to 308, 9999
196 M406	ABC2 terminal function selection		9999	No function	

Pr.	Name	Initial value	Setting range	Description
289 M431	Inverter output terminal filter	9999	5 to 50 ms	Set the time delay for the output terminal response.
			9999	No output terminal filter.

上正科技有限公司
購買、維修 此手冊零組件
電話：03-466333
Email: service@repairtw.com
Line Id: @zzzz
www.repairtw.com

(1) Output signal list

- The functions of the output terminals can be set.
- Refer to the following table and set each parameter. (0 to 99: Positive logic, 100 to 199: Negative logic)

Setting		Signal name	Function	Operation	Related parameter	Refer to page
Positive logic	Negative logic					
0	100	RUN	Inverter running	Output during operation when the inverter output frequency reaches **Pr.13 Starting frequency** or higher.	—	375
1	101	SU	Up to frequency*1	Output when the output frequency reaches the set frequency.	**Pr.41**	378
2	102	IPF	Instantaneous power failure/ undervoltage	Output when an instantaneous power failure or undervoltage protection operation occurs.	**Pr.57**	511, 517
3	103	OL	Overload warning	Output during operation of the stall prevention function.	**Pr.22, Pr.23, Pr.66, Pr.148, Pr.149, Pr.154**	336
4	104	FU	Output frequency detection	Output when the output frequency reaches the frequency set in **Pr.42** (**Pr.43** during reverse rotation) or higher.	**Pr.42, Pr.43**	378
5	105	FU2	Second output frequency detection	Output when the output frequency reaches the frequency set in **Pr.50** or higher.	**Pr.50**	378
6	106	FU3	Third output frequency detection	Output when the output frequency reaches the frequency set in **Pr.116** or higher.	**Pr.116**	378
7	107	RBP	Regenerative brake pre-alarm	Output when 85% of the regenerative brake duty set in **Pr.70** is reached. (Not compatible with the IP55 compatible model.)	**Pr.70**	593

Setting		Signal name	Function	Operation	Related parameter	Refer to page
Positive logic	Negative logic					
8	108	THP	Electronic thermal O/L relay pre-alarm	Output when the cumulative electronic thermal O/L relay value reaches 85% of the trip level. (Electronic thermal O/L relay protection (E.THT/E.THM) is activated when the value reaches 100%.)	**Pr.9**	322
10	110	PU	PU operation mode	Output when PU operation mode is selected.	**Pr.79**	299
11	111	RY	Inverter operation ready	Output when the reset process is completed after powering ON the inverter (when starting is possible by switching the start signal ON or during operation).	—	375
12	112	Y12	Output current detection	Output when the output current is higher than the **Pr.150** setting for the time set in **Pr.151** or longer.	**Pr.150, Pr.151**	381
13	113	Y13	Zero current detection	Output when the output current is lower than the **Pr.152** setting for the time set in **Pr.153** or longer.	**Pr.152, Pr.153**	381
14	114	FDN	PID lower limit	Output when the value is lower than the lower limit of PID control.	**Pr.127 to Pr.134, Pr.575 to Pr.577**	483
15	115	FUP	PID upper limit	Output when the value is higher than the upper limit of PID control.		
16	116	RL	PID forward/reverse rotation output	Output during forward rotation under PID control.		
17	—	MC1	Electronic bypass MC1	Used when using the commercial power supply-inverter switchover function.	**Pr.135 to Pr.139, Pr.159**	450
18	—	MC2	Electronic bypass MC2			
19	—	MC3	Electronic bypass MC3			
20	120	BOF	Brake opening request	Output to open the brake when the brake PLC function is selected.	**Pr.278 to Pr.285, Pr.292**	457
22	122	BOF2	Second brake opening request	Output to open the brake when the second brake PL function is selected (RT signal ON).	**Pr.641 to Pr.649, Pr.292**	
25	125	FAN	Fan fault output	Output when a fan fault occurs.	**Pr.244**	329
26	126	FIN	Heatsink overheat pre-alarm	Output when the heatsink temperature reaches about 85% of the heatsink overheat protection operation temperature.	—	632
27	127	ORA	Orientation complete (for FR-A8AP)*3	When orientation is enabled.	**Pr.350 to Pr.366, Pr.369, Pr.393, Pr.396 to Pr.399**	471
28	128	ORM	Orientation fault (for FR-A8AP)*3			
30	130	Y30	Forward rotation output (for FR-A8AP)*3	Output during motor forward rotation.	—	377
31	131	Y31	Reverse rotation output (for FR-A8AP)*3	Output during motor reverse rotation.		377
32	132	Y32	Regenerative status output (for FR-A8AP)*3	Output when the regenerative status is entered under vector control.		377
33	133	RY2	Operation ready 2	Output during pre-excitation or operation under Real sensorless vector control, vector control, and PM sensorless vector control.	—	375
34	134	LS	Low speed detection	Output when the output frequency drops to the **Pr.865** setting or lower.	**Pr.865**	378
35	135	TU	Torque detection	Output when the motor torque is higher than the **Pr.864** setting.	**Pr.864**	383
36	136	Y36	In-position	Output when the number of droop pulses drops below the setting.	**Pr.426**	244
38	138	MEND	Travel completed	Output when the droop pulse is within the in-position width, and the position command operation is not completed or performing home position return.	**Pr.426**	244
39	139	Y39	Start time tuning completion	Output when tuning is completed during start-up.	**Pr.95, Pr.574**	445
40	140	Y40	Trace status	Output during trace operation.	**Pr.1020 to Pr.1047**	529
41	141	FB	Speed detection	Output when the actual motor rotations per minute (estimated rotations per minute) reaches **Pr.42 (Pr.50, Pr.116)**.	**Pr.42, Pr.50, Pr.116**	378
42	142	FB2	Second speed detection			
43	143	FB3	Third speed detection			

上正科技有限公司
購買 維修 此手冊零組件
電話： 037-466333
Email: service@repairtw.com
Line id: @zzzz
www.repairtw.com

(M) Monitor display and monitor output signal

Setting		Signal name	Function	Operation	Related parameter	Refer to page
Positive logic	Negative logic					
44	144	RUN2	Inverter running 2	Output while the forward rotation or reverse rotation signal is ON. Output during deceleration even while the forward rotation or reverse rotation signal is OFF. (Not output while pre-excitation LX is ON.) Output also while the orientation command (X22) signal is ON. Under position control, turns ON when the servo is turned ON (LX ON). (Turns OFF when the servo turned is OFF (LX OFF)).	—	375
45	145	RUN3	Inverter running and start command is ON	Output while the inverter is running and the start command is ON.	—	375
46	146	Y46	During deceleration at occurrence of power failure (retained until release)	Output after the power-failure deceleration function operates. (Retained until canceled.)	**Pr.261 to Pr.266**	523
47	147	PID	During PID control activated	Output during PID control.	**Pr.127 to Pr.134, Pr.575 to Pr.577**	483
48	148	Y48	PID deviation limit	Output when the absolute deviation value exceeds the limit value.	**Pr.127 to Pr.134, Pr.553, Pr.554**	483
49	149	Y49	During pre-charge operation	Output during pre-charge operation.	**Pr.127 to Pr.134, Pr.241, Pr.553, Pr.554, Pr.575 to Pr.577, Pr.753 to Pr.769, C42 to C45**	499
50	150	Y50	During second pre-charge operation			
51	151	Y51	Pre-charge time over	Output when the pre-charge operation reaches the time limit set in **Pr.764** or **Pr.769**.		
52	152	Y52	Second pre-charge time over			
53	153	Y53	Pre-charge level over	Output when the measured value before reaching the ending time during pre-charge operation is higher than the detection level set in **Pr.763** or **Pr.768**.		
54	154	Y54	Second pre-charge level over			
56	156	ZA	Home position return failure	Output while a home position return failure warning is occurring.	—	227
57	157	IPM	During PM sensorless vector control	Output while the control method is PM sensorless vector control.	**Pr.71, Pr.80, Pr.998**	169
60	160	FP	Position detection level	Output when the current position exceeds the position detection judgment value **(Pr.1294 and Pr.1295)**.	**Pr.1294 to Pr.1297**	244
61	161	PBSY	During position command opeartion	Output during position command operation.	—	227
63	163	ZP	Home position return completed	Output after home position return is completed.		
64	164	Y64	Control circuit capacitor life	Output during retry processing.	**Pr.65 to Pr.69**	332
68	168	EV	24 V external power supply operation	Output while operating with a 24 V power supply input from an external source.	—	56
70	170	SLEEP	PID output interruption	Output during PID output suspension function operation.	**Pr.127 to Pr.134, Pr.575 to Pr.577**	483
79	179	Y79	Pulse train output of output power	Output in pulses every time the accumulated output power of the inverter reaches the **Pr.799** setting.	**Pr.799**	388
84	184	RDY	Position control preparation ready (for FR-A8AP)*3	Output when the operation is set ready by servo ON (LX ON)	**Pr.419, Pr.428 to Pr.430**	239
85	185	Y85	DC current feeding	Output when there is a power failure or undervoltage for the AC current.	**Pr.30, Pr.70**	593

上正科技有限公司
購買、維修 此手冊零組件
電話： 037-466333
Email: service@repairtw.com
Line id: @zzzz
www.repairtw.com

Setting		Signal name	Function	Operation	Related parameter	Refer to page
Positive logic	Negative logic					
86	186	Y86	Control circuit capacitor life (for FR-A8AY, FR-A8AR)*3	Output when the control circuit capacitor approaches the end of its life.	**Pr.255 to Pr.259**	271
87	187	Y87	Main circuit capacitor life (for FR-A8AY, FR-A8AR)*3	Output when the main circuit capacitor approaches the end of its life.		
88	188	Y88	Cooling fan life (for FR-A8AY, FR-A8AR)*3	Output when the cooling fan approaches the end of its life.		
89	189	Y89	Inrush current limit circuit life (for FR-A8AY, FR-A8AR)*3	Output when the inrush current limit circuit approaches the end of its life.		
90	190	Y90	Life alarm	Output when any of the control circuit capacitor, main circuit capacitor and inrush current limit circuit or the cooling fan approaches the end of its life.		
91	191	Y91	Fault output 3(power-OFF signal)	Output when an error occurs due to an inverter circuit fault or connection fault.	—	378
92	192	Y92	Energy saving average value updated timing	Switches between ON and OFF each time the average power saving is updated when using the power saving monitor. This cannot be set in **Pr.195 or Pr.196**, **Pr.320 to Pr.322** (relay output terminal).	**Pr.52, Pr.54, Pr.158, Pr.891 to Pr.899**	365
93	193	Y93	Current average monitor signal	Outputs the average current and maintenance timer value as a pulse. This cannot be set in **Pr.195 or Pr.196**, **Pr.320 to Pr.322** (relay output terminal).	**Pr.555 to Pr.557**	275
94	194	ALM2	Fault output 2	Output when the inverter's protective function is activated to stop the output (at fault occurrence). The signal output continues even during an inverter reset, and the signal output stops after the reset release. *2	—	377
95	195	Y95	Maintenance timer signal	Output when **Pr.503** reaches the **Pr.504** setting or higher.	**Pr.503, Pr.504**	274
96	196	REM	Remote output	Output via terminals when certain parameters are set.	**Pr.495 to Pr.497**	384
97	197	ER	Alarm output 2	When **Pr.875** = "0" (initial value), output in the same way as the ALM signal. When **Pr.875** = "1", if OHT/THM/PTC occurs, the signal is output, and deceleration to a stop is performed at the same time. When other protective functions operate, output when output is stopped.	**Pr.875**	328
98	198	LF	Alarm	Output when an alarm (fan fault or communication error warning) occurs.	**Pr.121, Pr.244**	329, 541
99	199	ALM	Fault	Output when the inverter's protective function is activated to stop the output (at fault occurrence). The signal output is stopped after a reset.	—	377
200	300	FDN2	Second PID lower limit	Output when the value is lower than the lower limit of second PID control.	**Pr.753 to Pr.758**	483
201	301	FUP2	Second PID upper limit	Output when the value is higher than the upper limit of second PID control.		
202	302	RL2	Second PID forward/reverse rotation output	Output during forward rotation under second PID control.	**Pr.753 to Pr.758**	
203	303	PID2	Second During PID control activated	Output during second PID control.		
204	304	SLEEP2	During second PID output shutoff	Output during second PID output suspension function operation.	**Pr.753 to Pr.758, Pr.1147 to Pr.1149**	
205	305	Y205	Second PID deviation limit	Output when the absolute deviation value during second PID control exceeds the limit value.	**Pr.753 to Pr.758, Pr.1145, Pr.1146**	

上正科技有限公司
購買、維修此手冊零組件
電話：
Email:
Line Id:
www.repairtw.com

(M) Monitor display and monitor output signal

Setting		Signal name	Function	Operation	Related parameter	Refer to page
Positive logic	Negative logic					
206	306	Y206	Cooling fan operation command signal	Output when the cooling fan operation is commanded.	**Pr.244**	329
207	307	Y207	Control circuit temperature signal	Output when the temperature of the control circuit board reaches the detection level or higher.	**Pr.663**	
208	308	PS	PU stopped signal	Output while the PU is stopped.	**Pr.75**	252
9999		—	No function	—	—	—

∗1 Take caution when changing the frequency setting with an analog signal or the setting dial of the operation panel (FR-DU08), because this change speed and the timing of the change speed determined by the acceleration/deceleration time setting may cause the output of the SU (up to frequency) signal to switch repeatedly between ON and OFF. (This repeating does not occur when the acceleration/deceleration time setting is "0 s".)

∗2 When the power is reset, the fault output 2 signal (ALM2) turns OFF at the same time as the power turns OFF.

∗3 Available when the plug-in option is connected.

REMARKS

- The same function may be set to more than one terminal
- The terminal conducts during function operation when the setting is "0 to 99, 200 to 299", and does not conduct when the setting is "100 to 199, 300 to 399".
- When **Pr.76 Fault code output selection** = "1", the output signals of terminals SU, IPF, OL and FU operate according to **Pr.76** setting. (When the inverter's protective function is activated, the signal output switches to fault code output.)
- The outputs of terminal RUN and the fault output relay are assigned according to the settings above, regardless of **Pr.76**.
- Changing the terminal assignment using **Pr.190 to Pr.196 (output terminal function selection)** may affect the other functions. Set parameters after confirming the function of each terminal.
- Do not assign signals which repeat frequently between ON and OFF to terminals A1B1C1 or A2B2C2. The life of the relay contacts will be shortened.

上正科技有限公司
購買、維修 此手冊零組件
電話： 037-466333
Email: service@repairtw.com
Line id: @zzzz
www.repairtw.com

(2) Adjusting the output terminal response level (Pr.289)

- The response level of the output terminals can be delayed in a range of 5 to 50 ms. (Operation example for the RUN signal.)

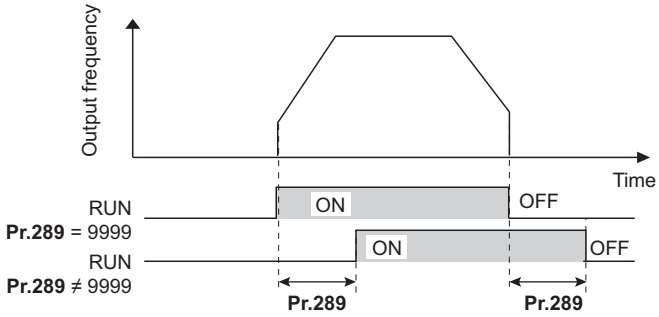

REMARKS

- When **Pr.157 OL signal output timer** is set for the Overload warning (OL) signal output, the OL signal is output when the set time of (**Pr.157** + **Pr.289**) elapses.
- For the output signal and the fault code output (on page 385) used in the PLC function (on page 527), the Pr.289 setting is invalid (no filter).

(3) Inverter operation ready signals (RY, RY2 signals) and inverter running signals (RUN, RUN2, RUN3 signals)

- Operation under V/F control and Advanced magnetic flux vector control

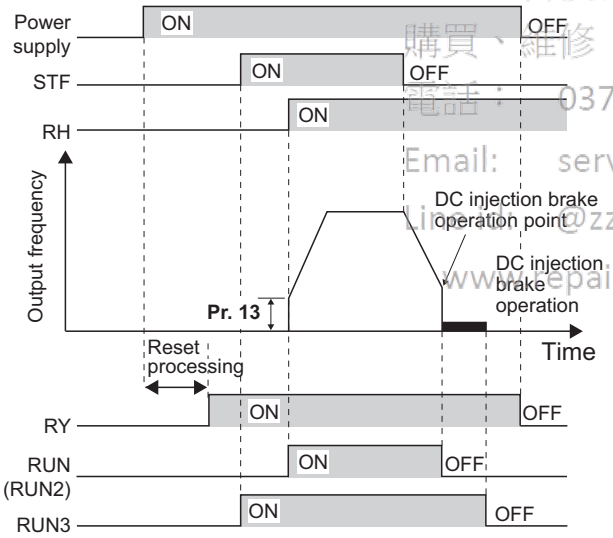

- When the inverter is ready for operation, the Inverter operation ready (RY) signal turns ON (stays ON during operation.)
- When the inverter output frequency reaches **Pr.13 Starting frequency** or higher, the Inverter running (RUN, RUN2) signals turn ON. The signal is OFF while the inverter is stopped and during DC injection brake operation. Inverter
- The Inverter running and start command is ON (RUN3) signal is ON while the inverter is running or the start signal is ON. (When the start command is ON, the RUN3 signal output turns ON even while the inverter's protective function is activated or the MRS is ON.) During DC injection brake operation as well, the output is ON, and when the inverter stops, it turns OFF.

上正科技有限公司
購買、維修 此手冊零組件
電話：037-466555
Email: service@repairtw.com
Line id: @zzzz
www.repairtw.com

- According to the inverter condition, the ON/OFF operation of each signal is as shown below.

Output signal	Start signal OFF (during stop)	Start signal ON (during stop)	Start signal ON (running)	DC injection brake operation	Output shutoff*2		Automatic restart after instantaneous power failure		
							Coasting		Restarting
					Start signal ON	Start signal OFF	Start signal ON	Start signal OFF	
RY*3	ON	ON	ON	ON	OFF		ON*1		ON
RY2	OFF	OFF	OFF	OFF	OFF		OFF		OFF
RUN	OFF	OFF	ON	OFF	OFF		OFF		ON
RUN2	OFF	OFF	ON	OFF	OFF		OFF		ON
RUN3	OFF	ON	ON	ON	ON	OFF	ON	OFF	ON

*1 OFF during power failure or undervoltage.
*2 Output is shutoff in conditions like a fault and when the MRS signal is ON.
*3 OFF while power is not supplied to the main circuit power supply.

(M) Monitor display and monitor output signal

- Operation under Real sensorless vector control, vector control and PM sensorless vector control

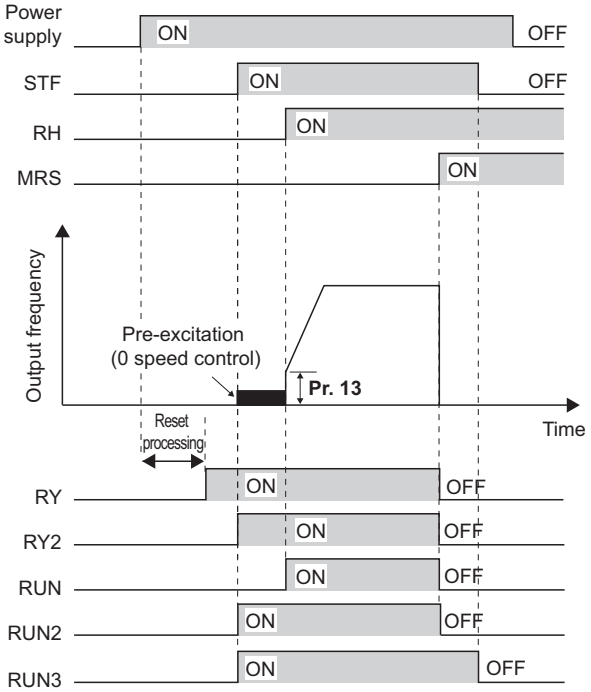

- When the inverter is ready for operation, the Inverter operation ready (RY) signal turns ON. (stays ON during operation.)
- When the inverter output frequency reaches **Pr.13 Starting frequency** or higher, the output of Inverter running (RUN) turns ON. The signal is OFF while the inverter is stopped, the DC injection brake is operating, during tuning at start-up, or during pre-excitation.
- The Inverter running 2 (RUN2) signal is ON while the inverter is running or the start signal is ON. (When the inverter's protective function is activated or the MRS is ON, the RUN2 signal turns OFF.)
- The Inverter running and start command is ON (RUN3) signal output is ON while the inverter is running or the start signal is ON.
- The RUN2 and RUN3 signals also are ON when the start command is ON and when pre-excitation is operating with the speed command = 0. (However, the RUN2 signal is OFF during pre-excitation operation activated by LX signal ON.)
- The Operation ready 2 (RY2) signal turns ON when the pre-excitation starts. It stays ON while pre-excitation is operating even when the inverter is stopped.

REMARKS

- When pre-excitation is activated by the pre-excitation signal (LX), the RY2 signal turns ON 100 ms (500 ms for FR-A820-03800(75K) or higher, FR-A840-02160(75K) or higher) after the LX signal turns ON. (When online auto tuning at start-up (**Pr.95** = "1") is selected, the ON timing is delayed by the tuning time.)

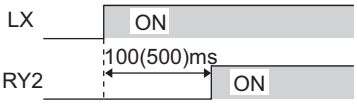

上正科技有限公司
購買 維修 此手冊零組件
電話： 037-466333
Email: service@repairtw.com
Line Id: @2222
www.repairtw.com

- According to the inverter condition, the ON/OFF operation of each signal is as shown below.

Output signal	Start signal OFF (during stop)	Start signal ON*1 (pre-excitation)	Start signal ON (running)	LX signal ON (pre-excitation)	DC injection brake operating (pre-excitation)	Output shutoff*5		Automatic restart after instantaneous power failure		
								Coasting		Restarting
						Start signal ON	Start signal OFF	Start signal ON	Start signal OFF	
RY*6	ON	ON	ON	ON	ON	OFF		ON*2		ON
RY2	OFF	ON	ON	ON*3	ON	OFF		OFF		OFF
RUN	OFF	OFF	ON	OFF*4	OFF	OFF		OFF		ON
RUN2	OFF	ON	ON	OFF*4	OFF	OFF		OFF		ON
RUN3	OFF	ON	ON	ON	ON	ON	OFF	ON	OFF	ON

*1 When the start signal is ON and the frequency command is 0 Hz, pre-excitation is entered.
*2 Turns OFF during power failure or undervoltage.
*3 A delay of 100 ms (500 ms for FR-A820-03800(75K) or higher, FR-A840-02160(75K) or higher) occurs when turned ON.
*4 Turns ON while the servo is ON (LX signal ON) under position control.
*5 Output is shutoff in conditions like a fault and when the MRS signal is ON.
*6 OFF while power is not supplied to the main circuit power supply.

- When using the RY, RY2, RUN, RUN2 and RUN3 signals, refer to the following and assign the functions by **Pr.190 to Pr.196 (output terminal function selection)**.

Output signal	Pr.190 to Pr.196 settings	
	Positive logic	Negative logic
RY	11	111
RY2	33	133
RUN	0	100
RUN2	44	144
RUN3	45	145

REMARKS

- The RUN signal (positive logic) is assigned to the terminal RUN in the initial status.

(4) Forward rotation and reverse rotation signals (Y30 and Y31)

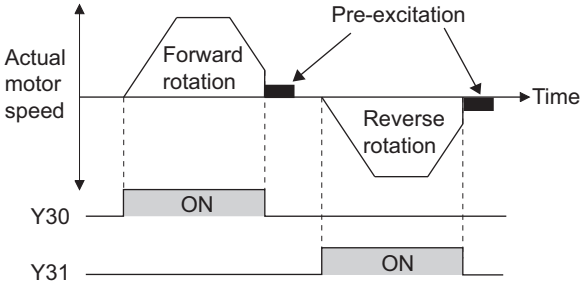

- Under vector control, a Forward rotation output (Y30) signal or Reverse rotation output (Y31) signal is output according to the actual rotation of the motor.
- During pre-excitation (zero speed, servo lock) under speed control or torque control, Y30 and Y31 are OFF. Note that during servo lock under position control, the output is according to the motor rotation, the same as during operation.
- To use the Y30 signal, set "30 (positive logic) or 130 (negative logic)" in any of **Pr.190 to Pr.196 (output terminal function selection)** to assign the function to the output terminal.
- To use the Y31 signal, set "31 (positive logic) or 131 (negative logic)" in any of **Pr.190 to Pr.196 (output terminal function selection)** to assign the function to the output terminal.

REMARKS

- Always OFF under V/F control, Advanced magnetic flux vector control, Real sensorless vector control, and PM sensorless vector control.
- If the motor is rotated by an external force or other cause while the inverter is stopped, Y30 and Y31 stay OFF.

(5) Regenerative status output signal (Y32)

上正科技有限公司
購買、維修 此手冊零組件
電話： 037-466833
Email: service@repairtw.com
Line id: @zzzz
www.repairtw.com

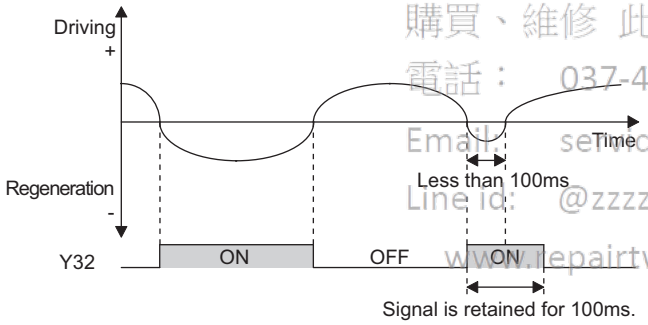

- When the motor is in the regenerative status (motor is in the dynamic braking status) under vector control, the Regenerative status output (Y32) signal turns ON. Once it turns ON, the signal is retained for at least 100 ms.
- The signal turns OFF during a stop or pre-excitation.
- To use the Y32 signal, set "32 (positive logic) or 132 (negative logic)" in any of **Pr.190 to Pr.196 (output terminal function selection)** to assign the function to the output terminal.

REMARKS

- Always OFF under V/F control, Advanced magnetic flux vector control, Real sensorless vector control, and PM sensorless vector control.

(6) Fault output signals (ALM, ALM2)

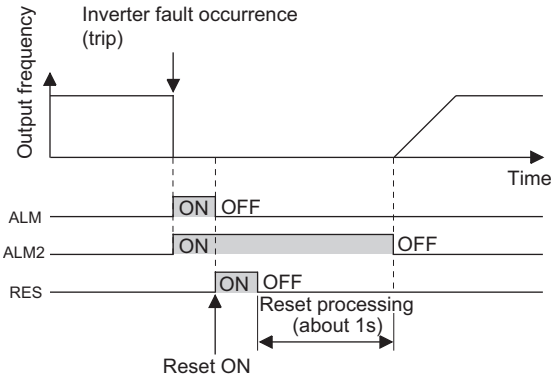

- The Fault (ALM, ALM2) signals are output when the inverter protective function is activated.
- The ALM2 signal stays ON during the reset period after the fault occurs.
- To use the ALM2 signal, set "94 (positive logic) or 194 (negative logic)" in any of **Pr.190 to Pr.196 (output terminal function selection)** to assign the function to the output terminal.
- The ALM signal is assigned to the A1B1C1 contacts in the initial status.

REMARKS

- For the inverter fault details, refer to page 623.

(7) Input MC shutoff signal (Y91)

- The Fault output 3 (Y91) signal is output when a fault originating in the inverter circuit or a connection fault occurs.
- To use the Y91 signal, set "91 (positive logic) or 191 (negative logic)" in any of **Pr.190 to Pr.196 (output terminal function selection)** to assign the function to the output terminal.
- The following table shows the faults that output the Y91 signal. (For the fault details, refer to page 623.)

Fault record
Inrush current limit circuit fault(E.IOH)
CPU fault(E.CPU)
CPU fault(E.6)
CPU fault(E.7)
Parameter storage device fault(E.PE)
Parameter storage device fault(E.PE2)
24 VDC power fault(E.P24)
Operation panel power supply short circuit RS-485 terminals power supply short circuit(E.CTE)
Output side earth (ground) fault overcurrent(E.GF)
Output phase loss(E.LF)
Brake transistor alarm detection(E.BE)
Internal circuit fault(E.13/E.PBT)

♦ **Parameters referred to** ♦

Pr.13 Starting frequency page 291, page 292

Pr.76 Fault code output selection page 387

上正科技有限公司
購買、維修 此手冊零組件
電話： 037-466333
Email: service@repairtw.com
Line id: @zzzz
www.repairtw.com

5.11.7 Output frequency detection

The inverter output frequency is detected and output as output signals.

Pr.	Name	Initial value		Setting range	Description
		FM	CA		
41 **M441**	**Up-to-frequency sensitivity**	10%		0 to 100%	Set the level where the SU signal turns ON.
42 **M442**	**Output frequency detection**	6 Hz		0 to 590 Hz	Set the frequency where the FU (FB) signal turns ON.
43 **M443**	**Output frequency detection for reverse rotation**	9999		0 to 590 Hz	Set the frequency where the FU (FB) signal turns ON in reverse rotation.
				9999	Same as the **Pr.42** setting.
50 **M444**	**Second output frequency detection**	30 Hz		0 to 590 Hz	Set the frequency where the FU2 (FB2) signal turns ON.
116 **M445**	**Third output frequency detection**	60 Hz	50 Hz	0 to 590 Hz	Set the frequency where the FU3 (FB3) signal turns ON.
865 **M446**	**Low speed detection**	1.5 Hz		0 to 590 Hz	Set the frequency where the LS signal turns ON.
870 **M400**	**Speed detection hysteresis**	0 Hz		0 to 5 Hz	Set the hysteresis width for the detected frequency.

(1) Output up-to-frequency sensitivity (SU signal, Pr.41)

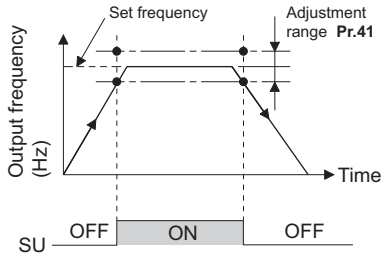

- Up to frequency (SU) is output when the output frequency reaches the set frequency.
- The **Pr.41** value can be adjusted within the range ±1% to ±100% considering the set frequency as 100%.
- This parameter can be used to check that the set frequency has been reached, and provide signals such as the operation start signal for related equipment.

(2) Output frequency detection (FU (FB) signal, FU2 (FB2) signal, FU3 (FB3) signal, Pr.42, Pr.43, Pr.50, Pr.116)

- Output frequency detection (FU (FB)) is output when the output frequency reaches the **Pr.42** setting or higher.
- The FU (FU2, FU3) signals can be used for electromagnetic brake operation, opening, etc.
- The FU (FU2, FU3) signal is output when the output frequency (frequency command) reaches the set frequency. The FB (FU2, FU3) signal is output when the actual rotation detection speed (estimated speed in Real sensorless vector control, feedback value in vector control) of the motor reaches the set frequency. The FU signal and FB signal are output in the same manner under V/F control, Advanced magnetic flux vector control and encoder feedback control.
- Frequency detection that is dedicated to reverse rotation can be set by setting the detection frequency in **Pr.43**. This is useful for changing the timing of the electromagnetic brake operation during forward rotation (lifting) and reverse rotation (lowering) in operations such as lift operation.
- When **Pr.43** ≠ "9999", forward rotation uses the **Pr.42** setting and reverse rotation uses the **Pr.43** setting.
- When outputting a frequency detection signal separately from the FU signal, set the detection frequency in **Pr.50** or **Pr.116**. When the output frequency reaches the **Pr.50** setting or higher, the FU2 (FB2) signal is output (when it reaches the **Pr.116** setting or higher, the FU3 (FB3) signal is output).

上昌科技有限公司
購買、維修、找手冊零組件
電話： 037-466333
Email: service@repairtw.com
Line id: @zzzz
www.repairtw.com

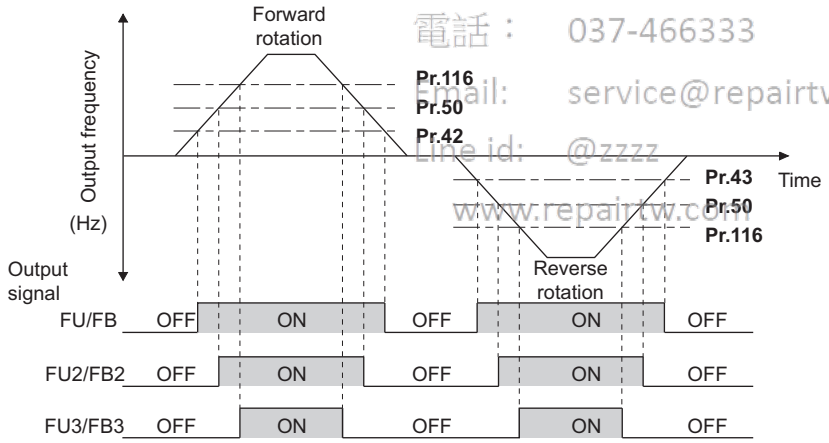

- For each signal, refer to the following table and assign the function by **Pr.190 to Pr.196 (output terminal function selection)**.

Pr.	Output signal	Pr.190 to Pr.196 settings	
		Positive logic	Negative logic
42, 43	FU	4	104
	FB	41	141
50	FU2	5	105
	FB2	42	142
116	FU3	6	106
	FB3	43	143

(3) Low speed detection (LS signal, Pr.865)

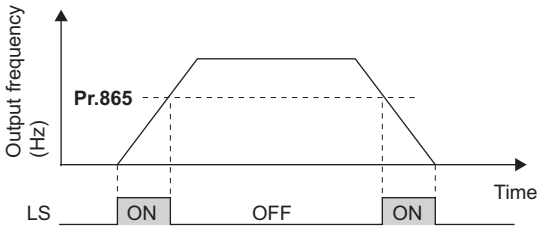

- When the output frequency (refer to the table below) drops to the **Pr.865 Low speed detection** setting or lower, the low speed detection signal (LS) is output.
- In speed control under Real sensorless vector control, vector control or PM sensorless vector control, when the frequency drops to the **Pr.865** setting, the output torque exceeds the **Pr.874 OLT level setting** setting, and this status continues for 3 s, a fault (E.OLT) appears and the inverter output stops.
- For the LS signal, set "34 (positive logic) or 134 (negative logic)" in any of **Pr.190 to Pr.196 (output terminal function selection)** to assign the function to the output terminal.

(4) Speed detection hysteresis (Pr.870)

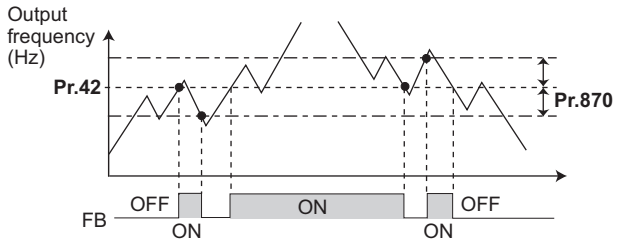

Example of the speed detection (FB) signal

- This function prevents chattering of the speed detection signals. When an output frequency fluctuates, the following signals may repeat ON/OFF (chatter).
  Up to frequency signal (SU)
  Speed detection signal (FB, FB2, FB3)
  Low speed output signal (LS)
  Setting hysteresis to the detected frequency prevents chattering of these signals.

上正科技有限公司
購買、維修 此手冊零組件
電話： 027-466233
Email: service@repairtw.com
Line id: @xxx
www.repairtw.com

REMARKS

- In the initial setting, the FU signal is assigned to the terminal FU, and the SU signal is assigned to the terminal SU.
- All signals turn OFF during DC injection brake, pre-excitation (zero speed control, servo lock) and tuning at start-up.
- Each signal's reference frequency differs by the control method.

Control method	Compared frequency	
	FU, FU2, FU3	FB, FB2, FB3, SU, LS
V/F control	Output frequency	Output frequency
Advanced magnetic flux vector control	Output frequency before the slip compensation	Output frequency before the slip compensation
Real sensorless vector control	Frequency command value	Estimated frequency (estimated from the actual motor speed)
Encoder feedback control	Actual motor speed converted as frequency	Actual motor speed converted as frequency
vector control	Frequency command value	Actual motor speed converted as frequency
PM sensorless vector control	Frequency command value	Estimated frequency (actual motor speed)

- Setting a higher value in **Pr.870** slows the response of frequency detection signals (SU, FB, FB2, FB3, and LS).
- The ON/OFF logic for the LS signal is opposite for the FB signal.
- Changing the terminal assignment using **Pr.190 to Pr.196 (output terminal function selection)** may affect the other functions. Set parameters after confirming the function of each terminal.

♦ Parameters referred to ♦

Pr.190 to Pr.196 (output terminal function selection) ☞page 370
Pr.874 OLT level setting ☞page 181

5.11.8 Output current detection function

The output current during inverter running can be detected and output to the output terminal.

Pr.	Name	Initial value	Setting range	Description
150 **M460**	**Output current detection level**	150%	0 to 220%	Set the output current detection level. 100% is the rated inverter current.
151 **M461**	**Output current detection signal delay time**	0s	0 to 10s	Set the output current detection time. Set the time from when the output current reaches the setting or higher until the output current detection (Y12) signal is output.
152 **M462**	**Zero current detection level**	5%	0 to 220%	Set the zero current detection level. The rated inverter current is regarded as 100%.
153 **M463**	**Zero current detection time**	0.5s	0 to 1s	Set the time from when the output current drops to the **Pr.152** setting or lower until the zero current detection (Y13) signal is output.
166 **M433**	**Output current detection signal retention time**	0.1s	0 to 10s	Set the retention time when the Y12 signal is ON.
			9999	Retain the Y12 signal ON status. The signal is turned OFF at the next start.
167 **M464**	**Output current detection operation selection**	0	0, 1, 10, 11	Select the operation at turn on of the Y12 and Y13 signals.

(1) Output current detection (Y12 signal, Pr.150, Pr.151, Pr.166, Pr.167)

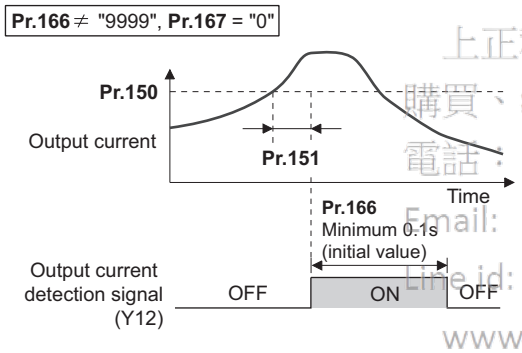

- The output current detection function can be used for purposes such as overtorque detection.
- If the output during inverter running remains higher than the **Pr.150** setting for the time set in **Pr.151** or longer, the Output current detection (Y12) signal is output from the inverter's open collector or relay output terminal.
- When the Y12 signal turns ON, the ON state is retained for the time set in **Pr.166**.
- When **Pr.166** = "9999", the ON state is retained until the next start.
- Setting **Pr.167** = "1" while the Y12 signal is ON does not cause E.CDO. The **Pr.167** setting becomes valid after the Y12 signal is turned OFF.
- For the Y12 signal, set "12 (positive logic) or 112 (negative logic)" in any of **Pr.190 to Pr.196 (output terminal function selection)** to assign the function to the output terminal.
- Select the inverter operation at turn on of the Y12 signal, output stop or continuous operation, by setting **Pr.167**.

Pr.167 setting	At turn on of Y12 signal	At turn on of Y13 signal
0 (Initial value)	Continuous operation	Continuous operation
1	Inverter trip (E.CDO)	Continuous operation
10	Continuous operation	Inverter trip (E.CDO)
11	Inverter trip (E.CDO)	Inverter trip (E.CDO)

上正科技有限公司
購買、維修 此手冊零組件
電話：037-466333
Email: service@repairtw.com
Line id: @2222
www.repairtw.com

(2) Zero current detection (Y13 signal, Pr.152, Pr.153)

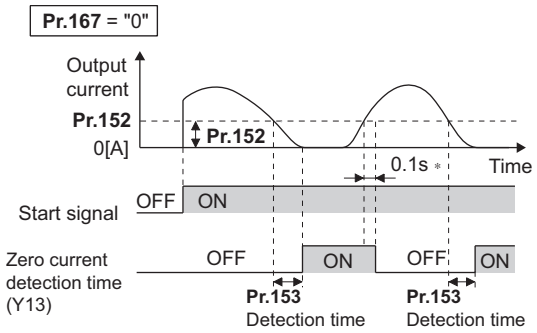

* When the output is restored to the **Pr.152** level, the Y13 signal is turned OFF after 0.1 s.

- If the output during inverter running remains higher than the **Pr.152** setting for the time set in **Pr.153** or longer, the Zero current detection (Y13) signal is output from the inverter's open collector or relay output terminal.
- Once turned ON, the zero current detection time signal (Y13) is held ON for at least 0.1s.
- If the inverter output current drops to "0", because torque is not generated, slippage due to gravity may occur, especially in a lift application.
  To prevent this, the Y13 signal, which closes the mechanical brake at "0" output current, can be output from the inverter.
- For the Y13 signal, set "13 (positive logic) or 113 (negative logic)" in any of **Pr.190 to Pr.196 (output terminal function selection)** to assign the function to the output terminal.
- Select the inverter operation at turn on of the Y13 signal, output stop or continuous operation, by setting **Pr.167**.

REMARKS

- The signals are enabled even when online or offline auto tuning is being executed.
- The response time of the Y12 and Y13 signals is approximately 0.1 s. Note that the response time varies with the load.
- When **Pr.152** = "0", detection is disabled.
- Changing the terminal assignment using **Pr.190 to Pr.196 (output terminal function selection)** may affect the other functions. Set parameters after confirming the function of each terminal.

上正科技有限公司
購買、維修 此手冊零組件
電話： 037-466333
Email: service@repairtw.com
www.repairtw.com

⚠ Caution

⚠ The zero current detection level setting should not be too low, and the zero current detection time setting not too long. When the output current is low and torque is not generated, the detection signal may not be output.

⚠ Even when using the zero current detection signal, a safety backup such as an emergency brake must be provided to prevent hazardous machine or equipment conditions.

♦ Parameters referred to ♦

Online auto tuning ☞page 445

Offline auto tuning ☞page 428, page 438

Pr.190 to Pr.196 (output terminal function selection) ☞page 370

5.11.9 Output torque detection

Magnetic flux Sensorless Vector PM

A signal is output when the motor torque is higher than the setting.
This function can be used for electromagnetic brake operation, open signal, etc.

Pr.	Name	Initial value	Setting range	Description
864 **M470**	**Torque detection**	150%	0 to 400%	Set the torque value where the TU signal turns ON.

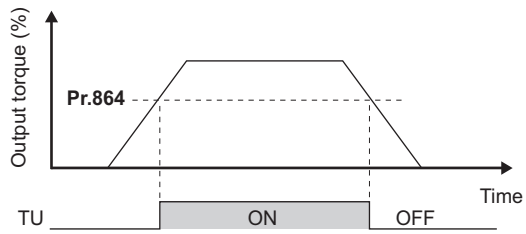

- The Torque detection (TU) signal turns ON when the output torque reaches the detection torque value set in **Pr.864** or higher.
- **Pr.864** is not available under V/F control.
- For the TU signal, set "35 (positive logic) or 135 (negative logic)" in one of **Pr.190 to Pr.196 (output terminal function selection)** to assign the function to the output terminal.

REMARKS

- Changing the terminal assignment using **Pr.190 to Pr.196 (output terminal function selection)** may affect the other functions. Set parameters after confirming the function of each terminal.

♦ Parameters referred to ♦

Pr.190 to Pr.196 (output terminal function selection) ☞ page 370

上正科技有限公司
購買、維修 此手冊零組件
電話： 037-466333
Email: service@repairtw.com
Line id: @zzzz
www.repairtw.com

5.11.10 Remote output function

The inverter output signals can be turned ON/OFF like the remote output terminals of a programmable controller.

Pr.	Name	Initial value	Setting range	Description	
495 M500	**Remote output selection**	0	0	Remote output data is cleared when the power supply is turned OFF	Remote output data is cleared during an inverter reset
			1	Remote output data is retained when the power supply is turned OFF	
			10	Remote output data is cleared when the power supply is turned OFF	Remote output data is retained during an inverter reset
			11	Remote output data is retained when the power supply is turned OFF	
496 M501	**Remote output data 1**	0	0 to 4095	Set values for the bits corresponding to each output terminal of the inverter output terminal. (Refer to the diagram below.)	
497 M502	**Remote output data 2**	0	0 to 4095	Set values for the bits corresponding to each output terminal of options FR-A8AY and FR-A8AR. (Refer to the diagram below.)	

(1) Remote output setting (REM signal, Pr.496, Pr.497)

Pr.496

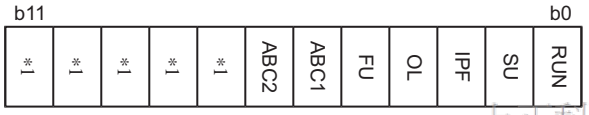

Pr.497

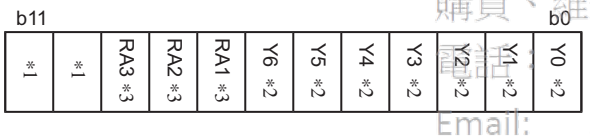

*1 Any value.

*2 Y0 to Y6 are available when the extension output option (FR-A8AY) is installed.

*3 RA1 to RA3 are available hen the relay output option (FR-A8AR) is installed.

- The output terminal can be turned ON/OFF with the **Pr.496 and Pr.497** settings. ON/OFF control can be performed for the remote output terminal via the PU connector, RS-485 terminals and communication option.
- To assign the Remote output (REM) signal to the terminal to be used for remote output, set "96 (positive logic) or 196 (negative logic)" in any of **Pr.190 to Pr.196 (output terminal function selection)**.
- Refer to the left figure, and set "1" in the terminal bit (terminal with the REM signal assigned) of **Pr.496 or Pr.497** to turn ON the output terminal (OFF when using negative logic). Set "0" to turn OFF the output terminal (ON when using negative logic).
- For example, when **Pr.190 RUN terminal function selection** = "96" (positive logic) and "1" (H01) is set in **Pr.496**, the terminal RUN turns ON.

上正科技有限公司
購買、維修 此產品請來電洽
電話：037-266333
Email: service@sapuritw.com
Line Id: @zzzz
www.repairtw.com

(2) Remote output data retention (REM signal, Pr.495)

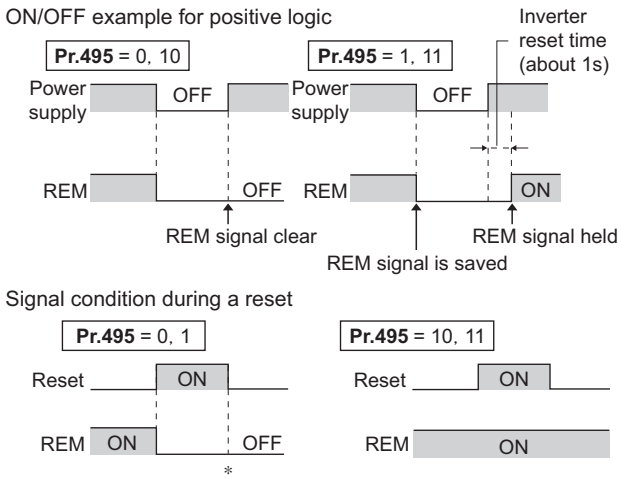

* When **Pr.495** = "1", the signal condition saved in EEPROM (condition of the last power OFF) is applied.

- If the power supply is reset (including a power failure) while **Pr.495** = "0 (initial value) or 10", t the REM signal output is cleared. (The terminal ON/OFF status is determined by the settings in **Pr.190 to Pr.196**.) "0" is also set in **Pr.496 and Pr.497**.
- When **Pr.495** = "1 or 11", the remote output data is saved in EEPROM before the power supply is turned OFF. This means that the signal output after power restoration is the same as before the power supply was turned OFF. However, when **Pr.495** = "1", the data is not saved during an inverter reset (terminal reset, reset request via communication).
- When **Pr.495** = "10 or 11", the signal before the reset is saved even during an inverter reset.

REMARKS

- The output terminals that have not been assigned with a REM signal by **Pr.190 to Pr.196** do not turn ON/OFF even if "0 or 1" is set in the terminal bits of **Pr.496 and Pr.497**. (ON/OFF is performed with the assigned functions.)
- When **Pr.495** = "1 or 11" (remote output data retention at power OFF), take measures such as connecting R1/L11 with P/+, and S1/L21 with N/- so that the control power is retained. If the control power is not retained, the output signal after turning ON the power is not guaranteed to work. When connecting the high power factor converter FR-HC2, assign the instantaneous power failure detection (X11) signal to an input terminal to input the IPF signal from the FR-HC2 to the terminal for X11 signal.

♦ **Parameters referred to** ♦

Pr.190 to Pr.196 (output terminal function selection) ☞ page 370

5.11.11 Analog remote output function

An analog value can be output from the analog output terminal.

Pr.	Name	Initial value	Setting range	Description	
655 M530	**Analog remote output selection**	0	0	Remote output data is cleared when the power supply is turned OFF	Remote output data is cleared during an inverter reset
			1	Remote output data is retained when the power supply is turned OFF	
			10	Remote output data is cleared when the power supply is turned OFF	Remote output data is retained during an inverter reset
			11	Remote output data is retained when the power supply is turned OFF	
656 M531	**Analog remote output 1**	1000%	800 to 1200%	Value output from the terminal set as "87" in terminal function selection **(Pr.54, Pr.158)**	Set the analog value for outputting from the analog output terminals FM/CA and AM and option FR-A8AY.
657 M532	**Analog remote output 2**	1000%	800 to 1200%	Value output from the terminal set as "88" in terminal function selection **(Pr.54, Pr.158)**	
658 M533	**Analog remote output 3**	1000%	800 to 1200%	Value output from the terminal set as "89" in terminal function selection **(Pr.54, Pr.158)**	
659 M534	**Analog remote output 4**	1000%	800 to 1200%	Value output from the terminal set as "90" in terminal function selection **(Pr.54, Pr.158)**	

上昇科技有限公司
購買・維修・叶主机板维修
電話：057-466533
Email: service@repairtw.com
Line id: @zzzz
www.repairtw.com

(1) Analog remote output (Pr.656 to Pr.659)

- The terminals FM/CA, AM and the analog output terminal of the option FR-A8AY can output the values set in **Pr.656** to **Pr.659 (Analog remote output)**.
- When **Pr.54 FM/CA terminal function selection** = "87, 88, 89, or 90" (remote output), the FM type inverter can output a pulse train from the terminal FM.
- For FM output (**Pr.291 Pulse train I/O selection** = "0 (initial value) or 1"):
  Terminal FM output [pulses/s] = 1440[Hz] × (analog remote output value - 1000)/100
  Where the output range is 0 to 2400 pulses/s.
- For high-speed pulse output (**Pr.291 Pulse train I/O selection** = "10, 11, 20, or 21"):
  Terminal FM output [pulses/s] = 50K[Hz] × (analog remote output value - 1000)/100
  Where the output range is 0 to 55K pulses/s.

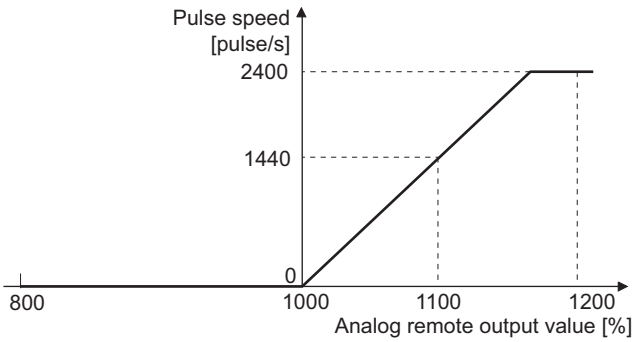

Terminal FM (FM output)

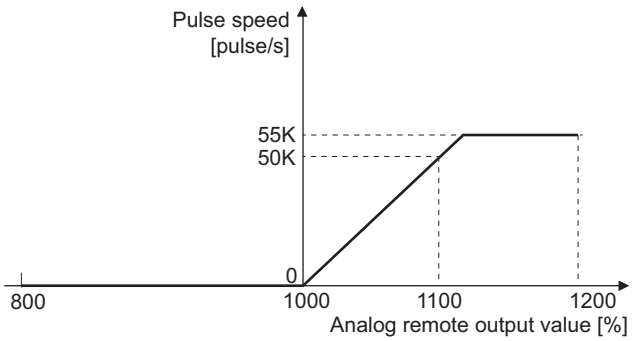

Terminal FM (High-speed pulse train output)

- When **Pr.54 FM/CA terminal function selection** = "87, 88, 89, or 90" (remote output), the CA type inverter can output any analog current from the terminal CA.

- Terminal CA output [mA] = 20 [mA] × (analog remote output value - 1000)/100
  Where the output range is 0 to 20 mA.

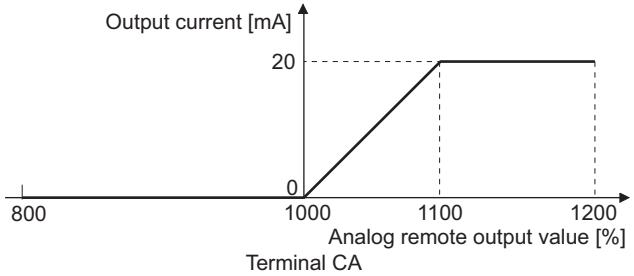

- When **Pr.158 AM terminal function selection** = "87, 88, 89, or 90", an analog voltage can be output from the terminal AM.
- Terminal AM output [V] = 10 [V] × (analog remote output value - 1000)/100
  The output range is -10 V to +10 V regardless of the **Pr.290 Monitor negative output selection** setting.

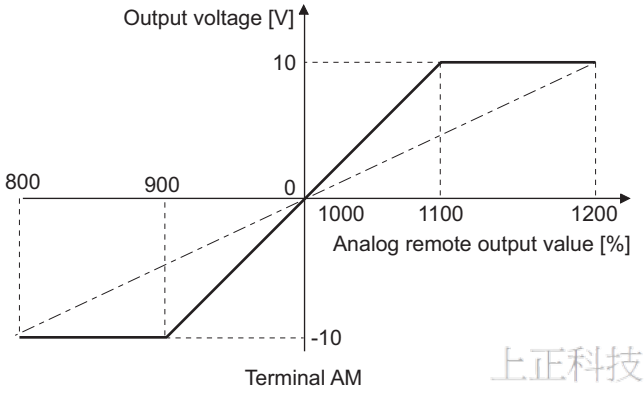

上正科技有限公司
購買、維修 此手冊零組件
電話：037-466333
Email: service@repairtw.com
Line id: @zzzz
www.repairtw.com

(2) Analog remote output data retention (Pr.655)

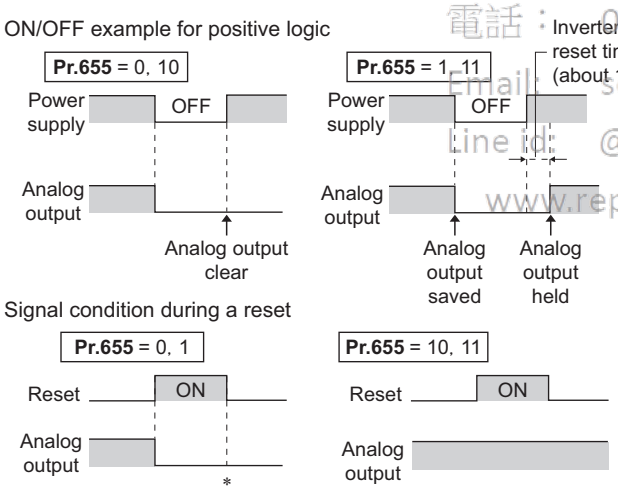

∗ When **Pr.655** = "1", the signal condition saved in EEPROM (condition of the last power OFF) is applied.

- When the power supply is reset (including a power failure) while **Pr.655 Analog remote output selection** = "0" (initial value) or "10" and , the remote analog output (**Pr.656 to Pr.659**) returns to its initial value (1000%).
- When **Pr.655** = "1 or 11", the analog remote output data is saved in EEPROM before the power supply is turned OFF. This means that the analog value output after power restoration is the same as before the power supply was turned OFF. However, when **Pr.655** = "1", the data is not saved during an inverter reset (terminal reset, reset request via communication).
- When **Pr.655** = "10 or 11", the analog output before the reset is saved even during an inverter reset.
- When the setting in **Pr.655** is changed, the remote analog output (**Pr.656 to Pr.659**) returns to its initial value (1000%).

REMARKS

- When **Pr.655** = "1 or 11" (remote analog output data retention at power OFF), take measures such as connecting R1/L11 with P/+, and S1/L21 with N/- so that the control power is retained (While power is supplied to R/L1, S/L2 and T/L3). If the control power is not retained, the analog output after turning ON the power is not guaranteed to work. When connecting the high power factor converter FR-HC2, assign the instantaneous power failure detection (X11) signal to an input terminal to input the IPF signal from the FR-HC2 to the terminal for X11 signal.

♦ Parameters referred to ♦

Pr.54 FM/CA terminal function selection ☞ page 356
Pr.158 AM terminal function selection ☞ page 356
Pr.290 Monitor negative output selection ☞ page 356
Pr.291 Pulse train I/O selection ☞ page 356

5.11.12 Fault code output selection

When a fault occurs, the corresponding data can be output as a 4-bit digital signal using via an open collector output terminal.
The fault code can be read using an input module of programmable controller, etc.

Pr.	Name	Initial value	Setting range	Description
76 M510	Fault code output selection	0	0	Without fault code output
			1	With fault code output **(Refer to the table below.)**
			2	Fault code is output only when a fault occurs. **(Refer to the table below.)**

- Fault codes can be output to the output terminals by setting **Pr.76 Fault code output selection** = "1 or 2".
- When the setting is "2", a fault code is only output when a fault occurs. In normal operation the terminal outputs the signal assigned in **Pr.191 to Pr.194 (output terminal function selection)**.
- The fault codes that can be output are shown in the table below. (0: Output transistor OFF, 1: Output transistor ON)

Operation panel indication (FR-DU08)	Output terminal operation				Fault code
	SU	IPF	OL	FU	
Normal *1	0	0	0	0	0
E.OC1	0	0	0	1	1
E.OC2	0	0	1	0	2
E.OC3	0	0	1	1	3
E.OV1 to E.OV3	0	1	0	0	4
E.THM	0	1	0	1	5
E.THT	0	1	1	0	6
E.IPF	0	1	1	1	7
E.UVT	1	0	0	0	8
E.FIN	1	0	0	1	9
E.BE	1	0	1	0	A
E. GF	1	0	1	1	B
E.OHT	1	1	0	0	C
E.OLT	1	1	0	1	D
E.OPT E.OP1	1	1	1	0	E
Other than the above	1	1	1	1	F

*1 When **Pr.76** = "2", the terminal outputs the signal assigned by **Pr.191 to Pr.194**.

上正科技有限公司
購買、維修 此手冊零組件
電話： 037-466333
Email: service@repairtw.com
Line Id: @zzzz
www.repairtw.com

REMARKS

- If an error occurs while **Pr.76** ≠ "0", the output terminals SU, IPF, OL, and FU output the signals in the table above regardless of the settings in **Pr.191 to Pr.194 (output terminal function selection)**. Take caution when controlling the inverter with the output signals set by **Pr.191 to Pr.194**.

♦ **Parameters referred to** ♦

Pr.190 to Pr.196 (output terminal function selection) ☞ page 370

5.11.13 Pulse train output of output power

After power ON or inverter reset, output signal (Y79 signal) is output in pulses every time accumulated output power, which is counted after the **Pr.799 Pulse increment setting for output power** is set, reaches the specified value (or its integral multiples).

Pr.	Name	Initial value	Setting range	Description
799 **M520**	**Pulse increment setting for output power**	1 kWh	0.1 kWh, 1 kWh, 10 kWh, 100 kWh, 1000 kWh	Pulse train output of output power (Y79) is output in pulses at every output power (kWh) that is specified.

(1) Pulse increment setting for output power (Y79 signal, Pr.799)

- After power ON or inverter reset, output signal (Y79 signal) is output in pulses every time accumulated output power of the inverter exceeds **Pr.799 Pulse increment setting for output power**.
- The inverter continues to count the output power at retry function or when automatic restart after instantaneous power failure function works without power OFF of output power (power failure that is too short to cause an inverter reset), and it does not reset the count.
- If power failure occurs, output power is counted from 0kWh again.
- Assign pulse output of output power (Y79: setting value 79 (positive logic), 179 (negative logic)) to any of **Pr.190 to Pr.196 (Output terminal function selection)**.

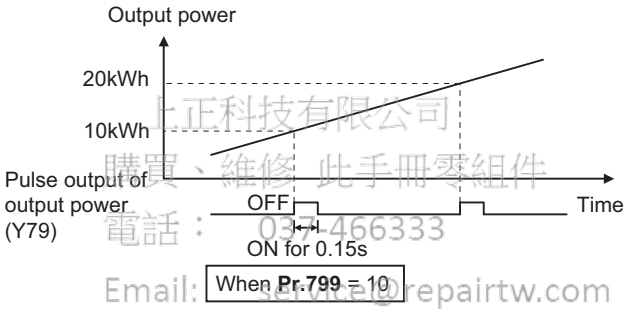

七正科技有限公司
購買、維修 此手冊零組件
電話： 037-466333
Email: service@repairtw.com
Line id: @zzzz
www.repairtw.com

REMARKS

- Because the accumulated data in the inverter is cleared when control power is lost by power failure or at an inverter reset, the value on the monitor cannot be used to charge electricity bill.
- Changing the terminal assignment using **Pr. 190 to Pr. 196 (output terminal function selection)** may affect the other functions. Set parameters after confirming the function of each terminal. (Refer to page 370)
- In an application where the pulse outputs are frequently turned ON/OFF, do not assign the signal to the terminal ABC1 or ABC2. Otherwise, the life of the relay contact decreases.

♦ Parameters referred to ♦

Pr.190 to Pr.196 (output terminal function selection) ☞ page 370

5.11.14 Detection of control circuit temperature

The temperature of the control circuit board can be monitored, and a signal can be output according to the predetermined temperature setting.

Pr.	Name	Initial value	Setting range	Description
663 M060	Control circuit temperature signal output level	0°C	0 to 100°C	Set the temperature where the Y207 signal turns ON.

(1) Control circuit temperature monitor

- The operation panel, terminal FM/CA, or terminal AM can be used to monitor the temperature of the control circuit board within the range of 0 to 100°C.
- When the operation panel or terminal AM is used, the range becomes -20 to 100°C by setting the display/output with a minus sign in **Pr.290 Monitor negative output selection**.

(2) Control circuit temperature detection (Pr.663, Y207 signal)

- The Y207 signal can be output when the control circuit temperature reaches the **Pr.663** setting or higher.
- For the Y207 signal, set "207 (positive logic) or 307 (negative logic)" in one of **Pr.190 to Pr.196 (output terminal function selection)** to assign the function to the output terminal.

REMARKS

- The Y207 signal is turned OFF when the control circuit temperature becomes 5°C or more lower than the **Pr.663** setting.
- Changing the terminal assignment using **Pr.190 to Pr.196 (output terminal function selection)** may affect the other functions. Set parameters after confirming the function of each terminal.

上正科技有限公司
購買、維修 此手冊零組件
電話: 037-466333
Email: service@repairtw.com
Line id: @zzzz
www.repairtw.com

♦ Parameters referred to ♦

Pr.54 FM/CA terminal function selection ☞ page 356
Pr.158 AM terminal function selection ☞ page 356
Pr.190 to Pr.196 (output terminal function selection) ☞ page 370
Pr.290 Monitor negative output selection ☞ page 356

5.12 (T) Multi-Function Input Terminal Parameters

Purpose	Parameter to set			Refer to page
To inverse the rotation direction with the voltage/current analog input selection (terminals 1, 2, and 4)	Analog input selection	P.T000, P.T001	Pr.73, Pr.267	391
To assign functions to analog input terminals	Terminal 1 and terminal 4 function assignment	P.T010, P.T040	Pr.858, Pr.868	395
To adjust the main speed by the analog auxiliary input	Analog auxiliary input and compensation (addition compensation and override functions)	P.T021, P.T031, P.T050, P.T051	Pr.73, Pr.242, Pr.243, Pr.252, Pr.253	396
To eliminate noise on analog inputs	Analog input filter	P.T002 to P.T007	Pr.74, Pr.822, Pr.826, Pr.832, Pr.836, Pr.849	398
To adjust analog input frequency/ voltage (current) (calibration)	Frequency setting voltage (current) bias and gain	P.T100 to P.T103, P.T200 to P.T203, P.T400 to P.T403, P.M043	Pr.125, Pr.126, Pr.241, C2 to C7 (Pr.902 to Pr.905), C12 to C15 (Pr.917 to Pr.918)	400
To adjust analog input torque/voltage (current) (calibration)	Torque setting voltage (current) bias and gain	P.T110 to P.T113, P.T410 to P.T413, P.M043	Pr.241, C16 to C19 (Pr.919 to Pr.920), C38 to C41 (Pr.932 to Pr.933)	406
To continue operating at analog current input loss	4-mA input check	P.T052 to P.T054	Pr.573, Pr.777, Pr.778	412
To assign functions to input terminals	Input terminal function selection	P.T700 to P.T711, P.T740	Pr.178 to Pr.189, Pr.699	416
To set MRS signal (Output stop) to the NC contact specification	MRS input selection	P.T720	Pr.17	419
To set Inverter run enable signal to the NC contact specification when FR-HC2/ FR-CV connected	X10 input selection	P.T721	Pr.599	595
To enable the second (third) function only during the constant speed	RT signal application period selection	P.T730	Pr.155	420
To assign start and forward/reverse commands to different signals	Start signal (STF/STR) operation selection	P.G106	Pr.250	422

上誼科技有限公司
購買・維修 此手冊零組件
電話： 037-466333
Email: service@repairtw.com
Line id: @zzzz
www.repairtw.com

5.12.1 Analog input selection

The functions to switch the analog input terminal specifications, override function, forward/reverse rotation by the input signal polarity are selectable.

Pr.	Name	Initial value	Setting range		Description
73 **T000**	**Analog input selection**	1	0 to 5, 10 to 15	Switch 1 - OFF (initial status)	The terminal 2 input specification (0 to 5 V, 0 to 10 V, 0 to 20 mA) and terminal 1 input specification (0 to ±5 V, 0 to ±10 V) are selectable. Also the override and reversible operation settings are selectable.
			6, 7, 16, 17	Switch 1 - ON	
267 **T001**	**Terminal 4 input selection**	0	0	Switch 2 - ON (initial status)	Terminal 4 input, 4 to 20 mA
			1	Switch 2 - OFF	Terminal 4 input, 0 to 5 V
			2		Terminal 4 input, 0 to 10 V

(1) Analog input specification selection

- Concerning the terminals 2 and 4 used for analog input, the voltage input (0 to 5 V, 0 to 10 V) and current input (0 to 20 mA) are selectable. To change the input specification, change the parameters **(Pr.73, Pr.267)** and voltage/current input switch settings (switches 1, 2).

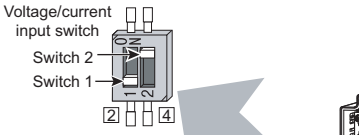

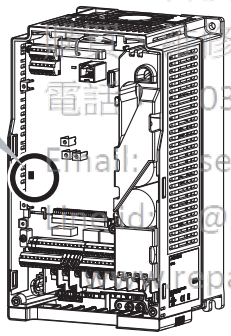

Switch 1: Terminal 2 input
ON: Current input
OFF: Voltage input (initial status)
Switch 2: Terminal 4 input
ON: Current input (initial status)
OFF: Voltage input

上正科技有限公司
維修 此手冊零組件
電話:037-466333
Email:service@repairtw.com
@zzzz
repairtw.com

- The terminal 2/4 rating specifications change depending on the voltage/current input switch settings.
  Voltage input: input resistance 10 kΩ ±1 kΩ, permissible maximum voltage 20 VDC
  Current input: input resistance 245 Ω ±5 Ω, permissible maximum current 30 mA
- Correctly set **Pr.73, Pr.267** and voltage/current input switch settings so that the analog signal appropriate for the settings is input. The incorrect settings shown in the table below cause a failure. Other incorrect settings result in an incorrect operation.

Setting causing a failure		Operation
Switch setting	**Terminal input**	
ON (current input)	Voltage input	Causes an analog signal output circuit failure in an external device (due to increased loads on the signal output circuit of the external device).
OFF (Voltage input)	Current input	Causes an input circuit failure in the inverter (due to an increased output power in the analog signal output circuit of an external device).

REMARKS

- Check the voltage/current input switch number indication before setting, because it is different from the FR-A700 series switch number indication.

(T) Multi-Function Input Terminal Parameters

- Set the **Pr.73** and voltage/current input switch settings according to the table below. ( ) indicates the main speed setting.)

Pr.73 setting	Terminal 2 input	Switch 1	Terminal 1 input	Compensation input terminal compensation method	Polarity reversible
0	0 to 10 V	OFF	0 to ±10 V	Terminal 1 Addition compensation	Not applied (state in which a negative polarity frequency command signal is not accepted)
1 (initial value)	0 to 5 V	OFF	0 to ±10 V		
2	0 to 10 V	OFF	0 to ±5 V		
3	0 to 5 V	OFF	0 to ±5 V		
4	0 to 10 V	OFF	0 to ±10 V	Terminal 2 Override	
5	0 to 5 V	OFF	0 to ±5 V		
6	0 to 20 mA	ON	0 to ±10 V	Terminal 1 Addition compensation	Applied
7	0 to 20 mA	ON	0 to ±5 V		
10	0 to 10 V	OFF	0 to ±10 V		
11	0 to 5 V	OFF	0 to ±10 V		
12	0 to 10 V	OFF	0 to ±5 V		
13	0 to 5 V	OFF	0 to ±5 V		
14	0 to 10 V	OFF	0 to ±10 V	Terminal 2 Override	
15	0 to 5 V	OFF	0 to ±5 V		
16	0 to 20 mA	ON	0 to ±10 V	Terminal 1 Addition compensation	
17	0 to 20 mA	ON	0 to ±5 V		

- Turning the Terminal 4 input selection(AU) signal ON sets terminal 4 to the main speed. With this setting, the main speed setting terminal is invalidated.
- Set the **Pr.267** and voltage/current input switch setting according to the table below.

Pr.267 setting	Terminal 4 input	Switch 2
0 (initial value)	4 to 20 mA	ON
1	0 to 5 V	OFF
2	0 to 10 V	OFF

上正科技有限公司
購買、維修 此手冊零組件
電話: 037-466333
Email: service@repairtw.com
Line id: @zzzz
www.repairtw.com

REMARKS

- To enable the terminal 4, turn the AU signal ON.
- Set the parameters and the switch settings so that they agree. Incorrect setting may cause a fault, failure or malfunction.
- Terminal 1 (frequency setting auxiliary input) is added to the terminal 2 or 4 main speed setting signal.
- When the override setting is selected, terminal 1 or 4 is set to the main speed setting, and terminal 2 is set to the override signal (0 to 5 V or 0 to 10 V, and 50% to 150%). (If the main speed of terminal 1 or 4 is not input, the compensation by terminal 2 is disabled.)
- Use **Pr.125 (Pr.126) (frequency setting gain)** to change the maximum output frequency at the input of the maximum output frequency command voltage (current). At this time, the command voltage (current) need not be input.
  The acceleration/deceleration time inclines up/down to the acceleration/deceleration reference frequency, so it is not affected by change of **Pr.73**.
- When **Pr.858 Terminal 4 function assignment and Pr.868 Terminal 1 function assignment** = "4", the terminal 1 and terminal 4 values are set to the stall prevention operation level.
- After the voltage/current input signal is switched with **Pr.73, Pr.267**, and voltage/current input switches, be sure to let calibration performed.
- When **Pr.561 PTC thermistor protection level** ≠ "9999", terminal 2 does not function as an analog frequency command.

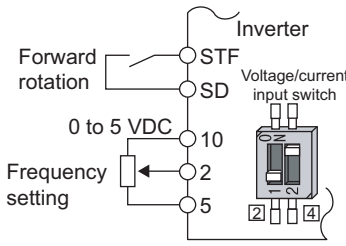

Connection diagram using terminal 2 (0 to 5 VDC)

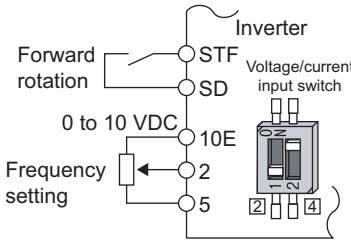

Connection diagram using terminal 2 (0 to 10 VDC)

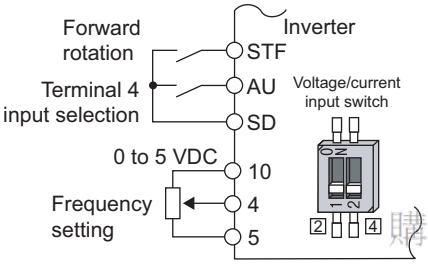

Connection diagram using terminal 4 (0 to 5 VDC)

(2) To run with an analog input voltage

- Concerning the frequency setting signal, input 0 to 5 VDC (or 0 to 10 VDC) to terminals 2 and 5. The 5 V (10 V) input is the maximum output frequency.
- The power supply 5 V (10 V) can be input by either using the internal power supply or preparing an external power supply. The internal power source is 5 VDC output between terminals 10 and 5, and 10 VDC output between terminals 10E and 5.

Terminal	Inverter internal power source voltage	Frequency setting resolution	Pr.73 (terminal 2 input voltage)
10	5 VDC	0.030 Hz/60 Hz	0 to 5 VDC input
10E	10 VDC	0.015 Hz/60 Hz	0 to 10 VDC input

- To supply the 10 VDC input to terminal 2, set "0, 2, 4, 10, 12, or 14" in **Pr.73**. (The initial value is 0 to 5 V.)
- Setting "1 (0 to 5 VDC)" or "2 (0 to 10 VDC)" in **Pr.267** and turning the voltage/current input switches OFF sets the terminal 4 to the voltage input specification. Turning ON the AU signal activates terminal 4 input.

REMARKS

The wiring length of the terminal 10, 2, 5 should be 30 m at maximum.

上正科技有限公司
購買、維修 此手冊零組件
電話： 037-466333
Email: service@repairtw.com
Line id: @zzzz
www.repairtw.com

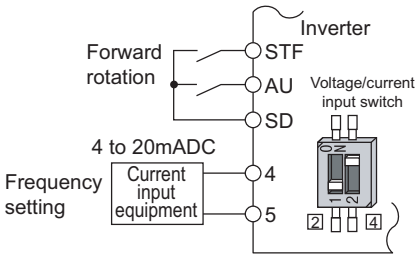

Connection diagram using terminal 4 (4 to 20mADC)

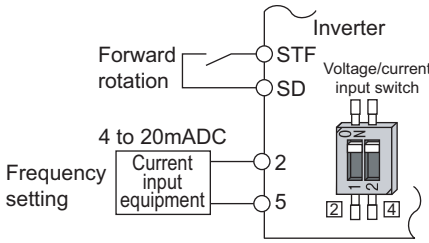

Connection diagram using terminal 2 (4 to 20mADC)

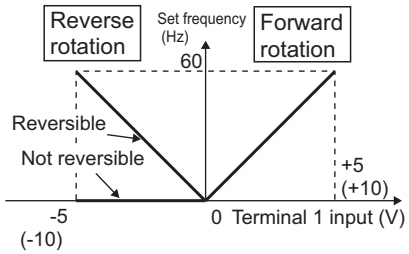

Compensation input characteristics when STF is ON

(3) Running with analog input current

- For constant pressure or temperature control with fans, pumps, or other devices, automatic operation is available by setting the regulator output signal 4 to 20 mADC to between terminals 4 and 5.
- To use the terminal 4, the AU signal needs to be turned ON.

- Setting "6, 7, 16, or 17" in **Pr.73** and turning the voltage/current input switches ON sets terminal 2 to the current input specification. Concerning the settings, the AU signal does not need to be turned ON.

(4) To perform forward/reverse rotation with the analog input (polarity reversible operation)

- Setting **Pr.73** to a value of "10 to 17" enables the polarity reversible operation.
- Setting ±input (0 to ±5 V or 0 to ±10 V) to the terminal 1 allows the operation of forward/reverse rotation by the polarity.

上昇科技有限公司
購買、維修 此手冊零組件
電話： 037-466333
Email: service@repairtw.com
Line id: @zzzz
www.repairtw.com

♦ Parameters referred to ♦

Pr.22 Stall prevention operation level ☞ page 336

Pr.125 Terminal 2 frequency setting gain frequency, Pr.126 Terminal 4 frequency setting gain frequency ☞ page 400

Pr.252, Pr.253 override bias/gain ☞ page 396

Pr.561 PTC thermistor protection level ☞ page 322

Pr.858 Terminal 4 function assignment, Pr.868 Terminal 1 function assignment ☞ page 395

5.12.2 Analog input terminal (terminal 1, 4) function assignment

The analog input terminal 1 and terminal 4 functions are set and changeable with parameters.

Pr.	Name	Initial value	Setting range	Description
868 **T010**	**Terminal 1 function assignment**	0	0 to 6, 9999	Select the terminal 1 function (Refer to the table below.)
858 **T040**	**Terminal 4 function assignment**	0	0, 1, 4, 9999	Select the terminal 4 function (Refer to the table below.)

- Concerning terminal 1 and terminal 4 used for analog input, the frequency (speed) command, magnetic flux command, torque command, and other similar commands are usable. The functions available are different depending on control mode as shown in the table below. (For control mode, see page 160.)
- Terminal 1 functions under different control modes

Pr.868 setting	V/F control Advanced magnetic flux vector control	Real sensorless vector control, vector control, PM sensorless vector control		
		Speed control	Torque control	Position control
0 (initial value)	Frequency setting auxiliary	Speed setting auxiliary	Speed limit assistance	—
1	—	Magnetic flux command *1	Magnetic flux command *1	Magnetic flux command *1
2	—	Regenerative torque limit (**Pr.810**=1)	—	Regenerative torque limit (**Pr.810** = 1)
3	—	—	Torque command (**Pr.804** = 0)	—
4	Stall prevention operation level input	Torque limit (**Pr.810** = 1)	Torque command (**Pr.804** = 0)	Torque limit (**Pr.810** = 1)
5	—	—	Forward/reverse rotation speed limit (**Pr.807** = 2)	—
6	—	Torque bias input (**Pr.840** =1, 2, 3) *1	—	—
9999	—	—	—	—

- Terminal 4 functions by control

Pr.858 setting	V/F control Advanced magnetic flux vector control	Real sensorless vector control, vector control, PM sensorless vector control		
		Speed control	Torque control	Position control
0 (initial value)	Frequency command (AU signal-ON)	Speed command (AU signal-ON)	Speed limit (AU signal-ON)	—
1	—	Magnetic flux command *1*2	Magnetic flux command *1*2	Magnetic flux command *1*2
4	Stall prevention operation level input	Torque limit (**Pr.810** = 1)*3	—	Torque limit (**Pr.810** = 1)*3
9999	—	—	—	—

—: No function

*1 This function is valid under vector control.
*2 Invalid when **Pr.868** = "1"
*3 Invalid when **Pr.868** = "4"

上正科技有限公司
購買、維修 此手冊零組件
電話：037-466333
Email: service@repairtw.com
Line id: @zzzz
www.repairtw.com

REMARKS

- When **Pr.868** = "1" (magnetic flux command) or "4" (stall prevention/torque limit), the terminal 4 function is enabled whether the AU terminal is turned ON/OFF.

♦ Parameters referred to ♦

Advanced magnetic flux vector control page 167
Real sensorless vector control page 160
Pr.804 Torque command source selection page 211
Pr.807 Speed limit selection page 213
Pr.810 Torque limit input method selection page 181
Pr.840 Torque bias selection page 198

5.12.3 Analog input compensation

Addition compensation or fixed ratio analog compensation (override) with terminal 2 set to auxiliary input is applicable to the multi-speed operation or terminal 2/terminal 4 speed setting signal (main speed).

Pr.	Name	Initial value	Setting range	Description
73 **T000**	**Analog input selection**	1	0 to 3, 6, 7, 10 to 13, 16, 17	Addition compensation
			4, 5, 14, 15	Override compensation
242 **T021**	**Terminal 1 added compensation amount (terminal 2)**	100%	0 to 100%	Set the percentage of addition compensation when terminal 2 is set to the main speed.
243 **T041**	**Terminal 1 added compensation amount (terminal 4)**	75%	0 to 100%	Set the percentage of addition compensation when terminal 4 is set to the main speed.
252 **T050**	**Override bias**	50%	0 to 200%	Set the percentage of override function bias side compensation.
253 **T051**	**Override gain**	150%	0 to 200%	Set the percentage of override function gain side compensation.

(1) Addition compensation (Pr.242, Pr.243)

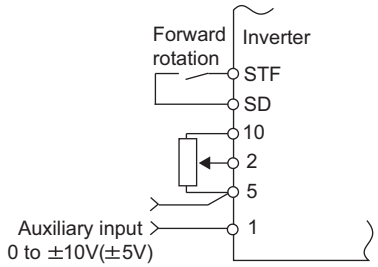

Example of addition compensation connection

- A compensation signal is addable to the main speed setting for such as synchronous or continuous speed control operation.
- Setting a value of "0 to 3, 6, 7, 10 to 13, 16, and 17" to **Pr.73** adds the voltage between terminals 1 and 5 to the voltage signal of the terminals 2 and 5.
- When **Pr.73**= "0 to 3, 6, or 7", and if the result of addition is negative, it is regarded as 0 and the operation is stopped. When **Pr.73** = "10 to 13, 16, or 17", the operation is reversed (polarity reversible operation) with STF signal ON.
- The terminal 1 compensation input is addable to the multi-speed setting or terminal 4 (initial value: 4 to 20 mA).
- The degree of addition compensation to terminal 2 is adjustable with **Pr.242**. The degree of addition compensation to terminal 4 is adjustable with **Pr.243**.

Analog command value with use of terminal 2

$$= \text{terminal 2 input} + \text{terminal 1 input} \times \frac{\textbf{Pr.242}}{100\ (\%)}$$

Analog command value with use of terminal 4

$$= \text{terminal 4 input} + \text{terminal 1 input} \times \frac{\textbf{Pr.243}}{100\ (\%)}$$

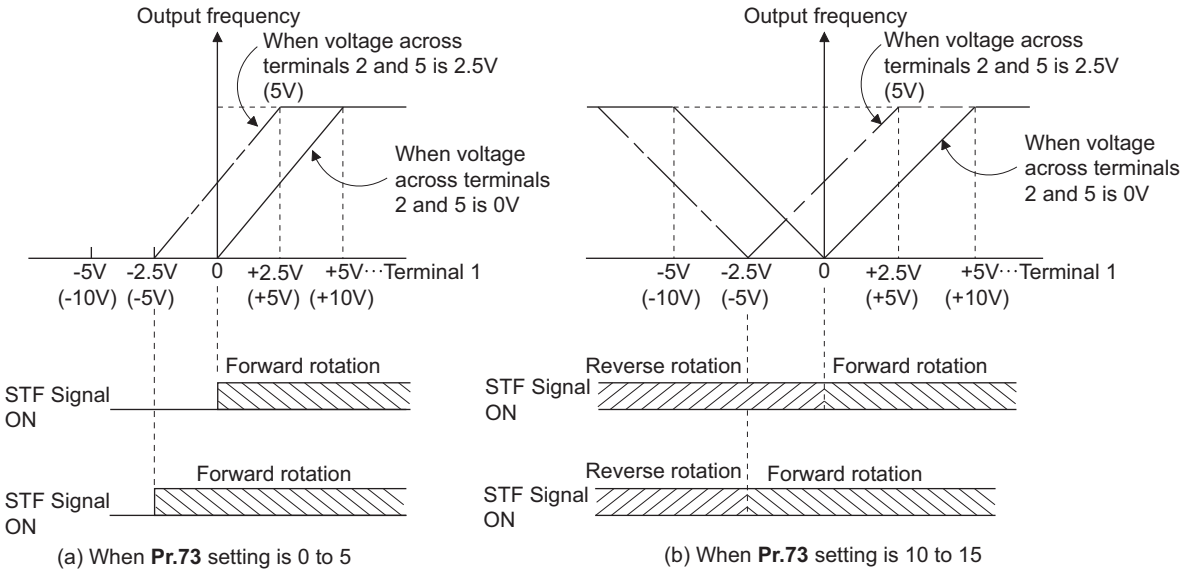

Auxiliary input characteristics

REMARKS

- After changing the **Pr.73** setting, check the voltage/current input switch setting. Incorrect setting may cause a fault, failure or malfunction. (For the settings, refer to page 391.)

(2) Override function (Pr.252, Pr.253)

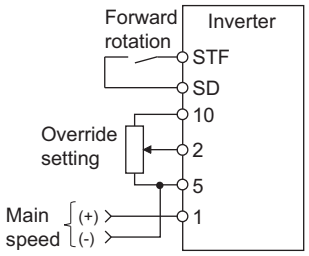

Connection example for the override function

- Use the override function to make the main speed changed at a specified rate.
- Set **Pr.73** = "4, 5, 14, or 15" to select the override function.
- When the override function is selected, terminal 1 or 4 is used for the main speed setting, and terminal 2 is used for the override signal. (if the main speed is not input to the terminal 1 or 4, the compensation by terminal 2 is disabled.)
- Specify the scope of override by using **Pr.252 and Pr.253**.
- How to calculate the set frequency for override:

$$\text{Set frequency (Hz)} = \text{main speed setting frequency (Hz)} \times \frac{\text{compensation (\%)}}{100\ (\%)}$$

Main speed setting frequency (Hz): Terminals 1 or 4 input, multi-speed setting
Compensation (%): Terminal 2 input

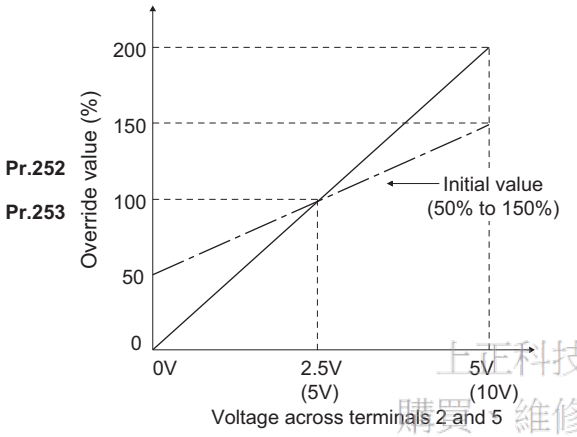

- Example) When **Pr.73** = "5"
  By the terminal 1 (main speed) and terminal 2 (auxiliary) input, the setting frequency is set as shown in the figure below.

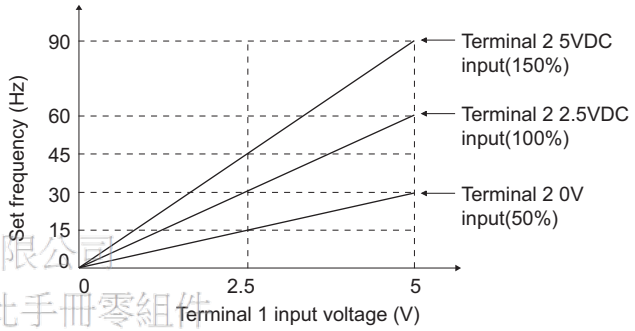

上正科技有限公司
購買 維修 此手冊零組件
電話： 037-466333
Email: service@repairtw.com
Line id: @777
www.repairtw.com

REMARKS

- To use terminal 4, the AU signal needs to be turned ON.
- To make compensation input for the multi-speed operation or remote setting, set **Pr.28 Multi-speed input compensation selection** = "1" (with compensation) (initial value "0").
- After changing the **Pr.73** setting, check the voltage/current input switch setting. Incorrect setting may cause a fault, failure or malfunction. (For the settings, refer to page 391.)

♦ Parameters referred to ♦

Pr.28 Multi-speed input compensation selection ☞page 319

Pr.73 Analog input selection ☞page 391

5.12.4 Analog input responsiveness and noise elimination

The frequency command/torque command responsiveness and stability are adjustable by using the analog input (terminals 1, 2, and 4) signal.

Pr.	Name	Initial value	Setting range	Description
74 **T002**	**Input filter time constant**	1	0 to 8	The primary delay filter time constant to the analog input is selectable. The higher the value, the lower the responsiveness.
822 **T003**	**Speed setting filter 1**	9999	0 to 5 s	Set the primary delay filter time constant to the external speed command (analog input command).
			9999	Use the **Pr.74** setting.
826 **T004**	**Torque setting filter 1**	9999	0 to 5 s	Set the primary delay filter time constant to the external torque command (analog input command).
			9999	Use the **Pr.74** setting.
832 **T005**	**Speed setting filter 2**	9999	0 to 5 s, 9999	Second function of **Pr.822** (enabled when the RT signal is ON)
836 **T006**	**Torque setting filter 2**	9999	0 to 5 s, 9999	Second function of **Pr.826** (enabled when the RT signal is ON)
849 **T007**	**Analog input offset adjustment**	100%	0 to 200%	Make the analog speed input (terminal 2) have an offset. This prevents the motor from rotating by noise to the analog input or another cause on the speed 0 command.

上正科技有限公司
購買、維修 此手冊零組件
電話： 037-466333
Email: service@repairtw.com
Line id: @zzzz
www.repairtw.com

(1) Block diagram

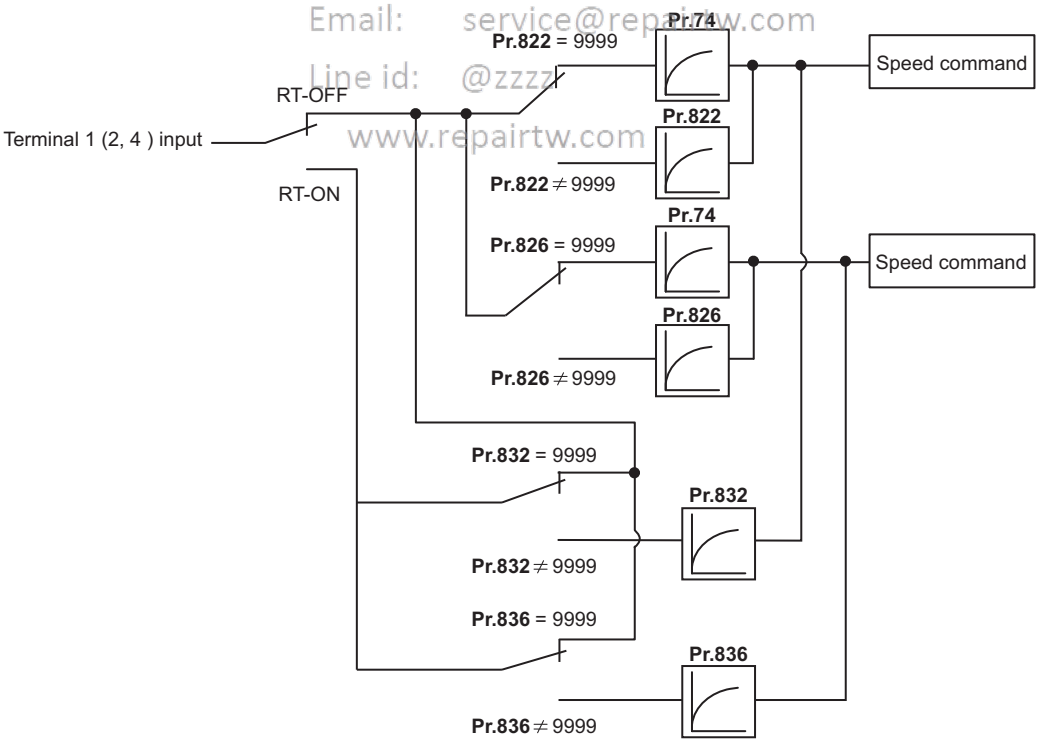

(2) Analog input time constant (Pr.74)

- It is effective to eliminate noise on the frequency setting circuit.
- Increase the filter time constant if steady operation cannot be performed due to noise, etc.
  A larger setting results in slower response. (The time constant can be between 0 and 8, which are about 5 ms to 1 s.)

(3) Analog speed command input time constant (Pr.822, Pr.832)

- Set the primary delay filter time constant to the external speed command (analog input command) by using **Pr.822 Speed setting filter 1**.
- To change the time constant, for example, in a case where only one inverter is used to switch between more than one motor, use **Pr.832 Speed setting filter 2**.
- **Pr.832 Speed setting filter 2** is enabled when the RT signal is ON.

(4) Analog torque command input time constant (Pr.826, Pr.836)

- Set the primary delay filter time constant to the external torque command (analog input command) by using **Pr.826 Torque setting filter 1**.
- To change the time constant, for example, in a case where only one inverter is used to switch between two motors, use **Pr.836 Torque setting filter 2**.
- **Pr.836 Torque setting filter 2** is enabled when the RT signal is ON.

(5) Analog speed command input offset adjustment (Pr.849)

- This is used to set a range in which the motor is stopped for prevention of incorrect motor operation in a very low speed rotation by the analog input speed command.
- Regarding the **Pr.849 Analog input offset adjustment** value 100% is 0, the offset voltage is set as described below:
  100% < **Pr.849** . . . . . Positive side
  100% > **Pr.849** . . . . . Negative side

The detailed calculation of the offset voltage is as described below:

Offset voltage [V] = Voltage at the time of 100% (5 V or 10 V*1) × (**Pr.849** - 100)/100

*1 It depends on the **Pr.73** setting.

上正科技有限公司
購買、維修 此手冊零組件
電話 037-466333
Email: service@repairtw.com
Line id: @zzzz
www.repairtw.com

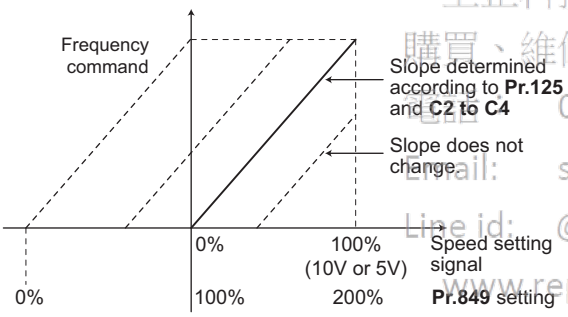

REMARKS

- Under PID control, the analog input filter is invalid (no filter).

♦ **Parameters referred to** ♦

Pr.73 Analog input selection ☞ page 391

Pr.125, C2 to C4 (bias and gain of the terminal 2 frequency setting) ☞ page 400

5.12.5 Frequency setting voltage (current) bias and gain

The degree (incline) of the output frequency to the frequency setting signal (0 to 5 VDC, 0 to 10 V or 4 to 20 mA) is selectable to a desired amount.

Use Pr.73 Analog input selection, Pr.267 Terminal 4 input selection, or the voltage/current input switch to switch among input 0 to 5 VDC, 0 to 10 V, and 4 to 20 mA. (Refer to page 391)

Pr.	Name	Initial value		Setting range	Description	
		FM	CA			
C2 (902)*1 T200	Terminal 2 frequency setting bias frequency	0 Hz		0 to 590 Hz	Set the terminal 2 input bias side frequency.	
C3 (902)*1 T201	Terminal 2 frequency setting bias	0%		0 to 300%	Set the converted % on the bias side voltage (current) of the terminal 2 input.	
125 (903)*1 T202 T022	Terminal 2 frequency setting gain frequency	60 Hz	50 Hz	0 to 590 Hz	Set the terminal 2 input gain (maximum) frequency.	
C4 (903)*1 T203	Terminal 2 frequency setting gain	100%		0 to 300%	Set the converted % on the gain side voltage (current) of the terminal 2 input.	
C5 (904)*1 T400	Terminal 4 frequency setting bias frequency	0 Hz		0 to 590 Hz	Set the terminal 4 input bias side frequency.	
C6 (904)*1 T401	Terminal 4 frequency setting bias	20%		0 to 300%	Set the converted % on the bias side current (voltage) of terminal 4 input.	
126 (905)*1 T402 T042	Terminal 4 frequency setting gain frequency	60 Hz	50 Hz	0 to 590 Hz	Set the terminal 4 input gain (maximum) frequency.	
C7 (905)*1 T403	Terminal 4 frequency setting gain	100%		0 to 300%	Set the converted % on gain side current (voltage) of terminal 4 input.	
C12 (917)*1 T100	Terminal 1 bias frequency (speed)	0 Hz		0 to 590 Hz	Set the terminal 1 input bias side frequency (speed). (speed limit)	
C13 (917)*1 T101	Terminal 1 bias (speed)	0%		0 to 300%	Set the converted % on bias side voltage of terminal 1 input. (speed limit)	
C14 (918)*1 T102	Terminal 1 gain frequency (speed)	60 Hz	50 Hz	0 to 590 Hz	Set the terminal 1 input gain (maximum) frequency (speed). (speed limit)	
C15 (918)*1 T103	Terminal 1 gain (speed)	100%		0 to 300%	Set the converted % on the gain side voltage of terminal 1 input. (speed limit)	
241 M043	Analog input display unit switchover	0		0	% display	Select the unit for analog input display
				1	V/mA display	

*1 The parameter number in parentheses is the one for use with the parameter unit (FR-PU07).

上正科技有限公司
購買、維修 此手冊零組件
電話： 037-466333
Email: service@repairtw.com
Line id: @zzzz
www.repairtw.com

(1) Relationship between the analog input terminal function and the calibration parameter

- Calibration parameter according to the terminal 1 function

Pr.868 Setting	Terminal function	Calibration parameter	
		Bias setting	Gain setting
0 (initial value)	Frequency (speed) setting auxiliary	**C2 (Pr.902) Terminal 2 frequency setting bias frequency** **C3 (Pr.902) Terminal 2 frequency setting bias** **C5 (Pr.904) Terminal 4 frequency setting bias frequency** **C6 (Pr.904) Terminal 4 frequency setting bias**	**Pr.125 Terminal 2 frequency setting gain frequency** **C4 (Pr.903) Terminal 2 frequency setting gain** **Pr.126 Terminal 4 frequency setting gain frequency** **C7 (Pr.905) Terminal 4 frequency setting gain**
1	Magnetic flux command	**C16 (Pr.919) Terminal 1 bias command (torque/magnetic flux)** **C17 (Pr.919) Terminal 1 bias (torque/ magnetic flux)**	**C18 (Pr.920) Terminal 1 gain command (torque/magnetic flux)** **C19 (Pr.920) Terminal 1 gain (torque/ magnetic flux)**
2	Regenerative driving torque limit	**C16 (Pr.919) Terminal 1 bias command (torque/magnetic flux)** **C17 (Pr.919) Terminal 1 bias (torque/ magnetic flux)**	**C18 (Pr.920) Terminal 1 gain command (torque/magnetic flux)** **C19 (Pr.920) Terminal 1 gain (torque/ magnetic flux)**
3	Torque command		
4	Stall prevention operation level*1 /torque limit/torque command		
5	Forward/reverse rotation speed limit	**C12 (Pr.917) Terminal 1 bias frequency (speed)** **C13 (Pr.917) Terminal 1 bias (speed)**	**C14 (Pr.918) Terminal 1 gain frequency (speed)** **C15 (Pr.918) Terminal 1 gain (speed)**
6	Torque bias input	**C16 (Pr.919) Terminal 1 bias command (torque/magnetic flux)** **C17 (Pr.919) Terminal 1 bias (torque/ magnetic flux)**	**C18 (Pr.920) Terminal 1 gain command (torque/magnetic flux)** **C19 (Pr.920) Terminal 1 gain (torque/ magnetic flux)**
9999	No function	—	—

上正科技有限公司
購買、維修 此手冊零組件
電話： 037-466333
Email: service@repairtw.com
Line id: @2222
www.repairtw.com

- Calibration parameter according to the terminal 4 function

Pr.858 setting	Terminal function	Calibration parameter	
		Bias setting	Gain setting
0 (initial value)	Frequency command	**C5 (Pr.904) Terminal 4 frequency setting bias frequency** **C6 (Pr.904) Terminal 4 frequency setting bias**	**Pr.126 Terminal 4 frequency setting gain frequency** **C7 (Pr.905) Terminal 4 frequency setting gain**
1	Magnetic flux command	**C38 (Pr.932) Terminal 4 bias command (torque/magnetic flux)** **C39 (Pr.932) Terminal 4 bias (torque/ magnetic flux)**	**C40 (Pr.933) Terminal 4 gain command (torque/magnetic flux)** **C41 (Pr.933) Terminal 4 gain (torque/ magnetic flux)**
4	Stall prevention operation level *1 /torque limit	**C38 (Pr.932) Terminal 4 bias command (torque/magnetic flux)** **C39 (Pr.932) Terminal 4 bias (torque/ magnetic flux)**	**C40 (Pr.933) Terminal 4 gain command (torque/magnetic flux)** **C41 (Pr.933) Terminal 4 gain (torque/ magnetic flux)**
9999	No function	—	—

*1 Perform stall prevention operation level bias/gain adjustment by using the **Pr.148 Stall prevention level at 0 V input and Pr.149 Stall prevention level at 10 V input**.

(2) To change the frequency for the maximum analog input (Pr.125, Pr.126)

- To change only the frequency setting (gain) for the maximum analog input voltage (current), set **Pr.125 (Pr.126)**. (**C2 (Pr.902) to C7 (Pr.905)** settings do not need to be changed.)

(3) Analog input bias/gain calibration (C2 (Pr.902) to C7 (Pr.905), C12 (Pr.917) to C15 (Pr.918))

- The "bias" and "gain" functions serve to adjust the relationship between a setting input signal and the output frequency. A setting input signal is such as 0 to 5 VDC/0 to 10 V or 4 to 20 mADC externally input to set the output frequency.
- Set the terminal 2 input bias frequency by using **C2 (Pr.902)**. (It is initially set to the frequency at 0 V.)
- Set the output frequency to the frequency command voltage (current) set by the **Pr.73 Analog input selection** by using **Pr.125**.
- Set the bias frequency of the terminal 1 input using **C12 (Pr.917)**. (It is initially set to the frequency at 0 V.)
- Set the gain frequency of the terminal 1 input using **C14 (Pr.918)**. (It is initially set to the frequency at 10 V.)
- Set the bias frequency of the terminal 4 input using **C5 (Pr.904)**. (It is initially set to the frequency at 4 mA.)
- Set the output frequency for 20 mA of the frequency command current (4 to 20 mA) by using **Pr.126**.

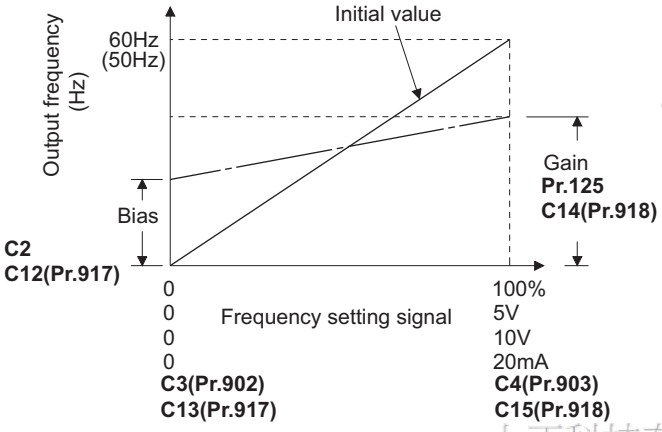

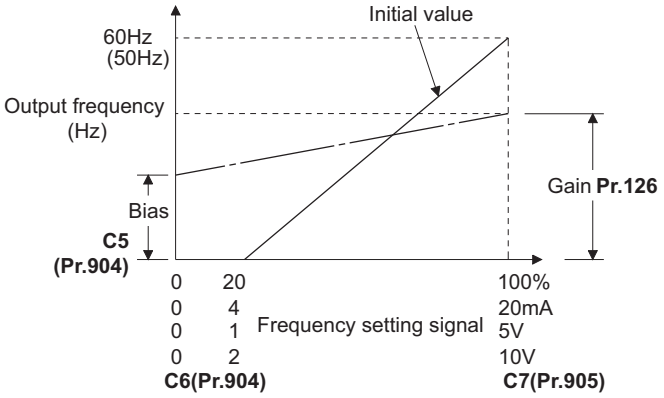

上正科技有限公司
購買、維修 此手冊零組件
電話： 037-466333
Email: service@repairtw.com
Line id: @2221
www.repairtw.com

- There are three methods to adjust the frequency setting voltage (current) bias/gain.
  (a) Adjust any point with application of a voltage (current) between terminals 2 and 5 (4 and 5).☞ page 403
  (b) Adjust any point without application of a voltage (current) between terminals 2 and 5 (4 and 5).☞ page 404
  (c) Adjust frequency only without adjustment of voltage (current).☞ page 405

REMARKS

- Performing terminal 2 calibration that includes a change of the setting frequency incline changes terminal 1 setting.
- Calibration with voltage input to terminal 1 sets (terminal 2 (4) analog value + terminal 1 analog value) as the analog calibration value.
- Always calibrate the input after changing the voltage/current input signal with **Pr.73, Pr.267**, and the voltage/current input selection switch.

(4) Analog input display unit changing (Pr.241)

- The analog input display unit (%/V/mA) for analog input bias and gain calibration can be changed.
- Depending on the terminal input specification set to **Pr.73, Pr.267**, and voltage/current input switches, the display unit of **C3 (Pr.902), C4 (Pr.903), C6 (Pr.904), and C7 (Pr.905)** change as described below:

Analog command (terminals 2, 4) (depending on Pr.73, Pr.267, and voltage/current input switch)	Pr.241 = 0 (initial value)	Pr.241 = 1
0 to 5 V input	0 to 5 V → 0 to 100% (0.1%)	0 to 100% → 0 to 5 V (0.01 V)
0 to 10 V input	0 to 10 V → 0 to 100% (0.1%)	0 to 100% → 0 to 5 V (0.01 V) display
0 to 20 mA input	0 to 20 mA → 0 to 100% (0.1%)	0 to 100% → 0 to 20 mA (0.01 mA)

REMARKS

- When the terminal 1 input specification (0 to ±5 V, 0 to ±10 V) does not agree with the main speed (terminal 2, terminal 4 input) specification (0 to 5 V, 0 to 10 V, 0 to 20 mA), and if the voltages are applied to terminal 1, the analog input is not correctly displayed. (For example, in the initial status, when 0 V is applied to terminal 2 and 10 V is applied to terminal 1, and the analog value is displayed as 5 V (100%).)
  Use the inverter with the Pr.241 = "0 (initial value)" setting. (0% display).

(5) Frequency setting voltage (current) bias/gain adjustment method

(a) Adjust any point with application of a voltage (current) between terminals 2 and 5 (4 and 5). (Frequency setting gain adjustment example)

Operation

1.	Screen at power-ON The monitor display appears.
2.	Changing the operation mode Press PU/EXT to choose the PU operation mode. [PU] indicator is on. Calibration is also possible in the External operation mode.
3.	Parameter setting mode Press MODE to choose the parameter setting mode. (The parameter number read previously appears.)
4.	Calibration parameter selection Turn dial until C. . . . appears. Press SET to display C -- -- -- -- .
5.	Selecting the parameter number Turn dial to choose C 4 **C4(Pr.903) Terminal 2 frequency setting gain** for the terminal 1. and C 7 **C7(Pr.905) Terminal 4 frequency setting gain** for the terminal 4.
6.	Analog voltage (current) display Press SET to display the analog voltage (current) % currently applied to the terminal 1 (4). Do not touch dial until calibration is completed.
7.	Voltage (current) application Apply a 5 V (20 mA) . (Turn the external potentiometer connected across terminals 1 and 5 (terminals 4 and 5) to a desired position.)
8.	Setting completed Press SET to enter the setting. The analog voltage (current) % and C 4 (C 7) flicker alternately. • Press dial to read another parameter. • Press SET to return to the C -- -- -- -- display. • Press SET twice to show the next parameter.

上正科技有限公司
購買、維修 此手冊零組件
電話： 037-466333
Email: service@repairtw.com
Line id: @zzzz
www.repairtw.com

(T) Multi-Function Input Terminal Parameters

(b) Adjust any point without application of a voltage (current) between terminals 2 and 5 (4 and 5). (Frequency setting gain adjustment example)

Operation

1. Screen at power-ON

The monitor display appears.

2. Changing the operation mode

Press PU/EXT to choose the PU operation mode. [PU] indicator is on.

Calibration is also possible in the External operation mode.

3. Parameter setting mode

Press MODE to choose the parameter setting mode. (The parameter number read previously appears.)

4. Calibration parameter selection

Turn  until C. . . . appears. Press SET to display C -- -- -- -- .

5. Selecting the parameter number

Turn  to choose C 4 **C4(Pr.903) Terminal 2 frequency setting gain** for the terminal 1.

and C 7 **C7(Pr.905) Terminal 4 frequency setting gain** for the terminal 4.

6. Analog voltage (current) display

Press SET to display the analog voltage (current) % currently applied to the terminal 1 (4).

7. Analog voltage (current) adjustment

When  is turned, the gain voltage (current) % currently set to the parameter is displayed.

When  until the desired gain voltage (current) % is displayed.

8. Setting completed

Press SET to enter the setting. The analog voltage (current) % and C 4 (C 7) flicker alternately.

- Turn  to read another parameter.
- Press SET to return to the C -- -- -- -- display.
- Press SET twice to show the next parameter.

上亞科技有限公司
購買 維修 此手冊零組件
電話： 037-466333
Email: service@repairtw.com
Line id: @zzzz
www.repairtw.com

REMARKS

By pressing  after step 6, the present frequency setting bias/gain setting can be confirmed. Confirmation is not possible after executing step 7.

(c) Adjust only frequency without adjustment of gain voltage (current)
(When changing the gain frequency from 60 Hz to 50 Hz)

Operation

1. Parameter selection

Turn  to choose P. 125 **(Pr.125)** for the terminal 2, and P. 126 **(Pr.126)** for the terminal 4.

Press SET to show the present set value. (150.00%)

2. Torque setting change

Turn  to change the set value to "50.00". (130.00%)

Press SET to enter the setting. "50.00" and "P. 125 (P. 126)" flicker alternately.

3. Checking the mode/monitor

Press MODE three times to change to the monitor / frequency monitor.

4. Start

Turn ON the start switch (STF or STR) to apply a voltage across terminals 1 and 5 (4 and 5),
Operation is performed with 130% torque.

REMARKS

- If the frequency meter (display meter) connected across the terminals FM and SD (CA and 5) does not indicate exactly 60 Hz, set the **calibration parameter C0 FM/CA terminal calibration**. (Refer to page 361.)
- If the gain and bias of voltage (current) setting voltage are too close, an error (Er3) may be displayed at setting.
- Changing **C4 (Pr.903) or C7 (Pr.905) (gain adjustment)** will not change **Pr.20**.
  Input to the terminal 1 (frequency setting auxiliary input) is added to the frequency setting signal.
- For operation outline of the parameter unit (FR-PU07), refer to the Instruction Manual of the FR-PU07.
- To set the value to 120 Hz or higher, the **Pr.18 High speed maximum frequency** needs to be 120 Hz or higher. (Refer to page 334.)
- Make the bias frequency setting using the **calibration parameter C2 (Pr.902) and C5 (Pr.904)**. (Refer to page 402.)

上昇科技有限公司
購買、維修 此手冊零組件
電話 0937102830
Email: service@repairtw.com
Line id: @zzz
www.repairtw.com

⚠ Caution

⚠ Be cautious when setting any value other than "0" as the bias frequency at 0 V (0 mA). Even if a speed command is not given, simply turning ON the start signal will start the motor at the preset frequency.

♦ Parameters referred to ♦

Pr.1 Maximum frequency, Pr.18 High speed maximum frequency ☞ page 334

Pr.20 Acceleration/deceleration reference frequency ☞ page 278

Pr.73 Analog input selection, Pr.267 Terminal 4 input selection ☞ page 391

Pr.79 Operation mode selection ☞ page 299

Pr.858 Terminal 4 function assignment, Pr.868 Terminal 1 function assignment ☞ page 395

5.12.6 Bias and gain for torque (magnetic flux) and set voltage (current) Sensorless Vector PM

The magnitude (slope) of the torque can be set as desired in relation to the torque setting signal (0 to 5 VDC, 0 to 10 VDC, or 4 to 20 mA).
Use **Pr.73 Analog input selection** or **Pr.267 Terminal 4 input selection** to switch among input 0 to 5 VDC, 0 to 10 V, and 4 to 20 mA. (Refer to page 391.)

Pr.	Name	Initial value	Setting range	Description
C16 (919)*1 T110	Terminal 1 bias command (torque/ magnetic flux)	0%	0 to 400%	Set the torque (magnetic flux) of the bias side of terminal 1 input.
C17 (919)*1 T111	Terminal 1 bias (torque/magnetic flux)	0%	0 to 300%	Set the converted % on bias side voltage of terminal 1 input.
C18 (920)*1 T112	Terminal 1 gain command (torque/ magnetic flux)	150%	0 to 400%	Set the torque (magnetic flux) of the gain (maximum) of terminal 1 input.
C19 (920)*1 T113	Terminal 1 gain (torque/magnetic flux)	100%	0 to 300%	Set the converted % on the gain side voltage of terminal 1 input.
C38 (932)*1 T410	Terminal 4 bias command (torque/ magnetic flux)	0%	0 to 400%	Set the torque (magnetic flux) of the bias side of terminal 4 input.
C39 (932)*1 T411	Terminal 4 bias (torque/magnetic flux)	20%	0 to 300%	Set the converted % on the bias side current (voltage) of terminal 4 input.
C40 (933)*1 T412	Terminal 4 gain command (torque/ magnetic flux)	150%	0 to 400%	Set the torque (magnetic flux) of the gain (maximum) of terminal 4 input.
C41 (933)*1 T413	Terminal 4 gain (torque/magnetic flux)	100%	0 to 300%	Set the converted % on gain side current (voltage) of terminal 4 input.
241 M043	Analog input display unit switchover	0	0	% display
			1	V/mA display

*1 The parameter number in parentheses is the one for use with the parameter unit (FR-PU07).

上正科技有限公司
購買、維修 此手冊零組件
電話： 037-466333
Email: service@repairtw.com
Line id: @zzzz
www.repairtw.com

(1) Changing the function of analog input terminal

- The initial value for terminal 1 used as analog input is set to speed setting auxiliary (speed limit auxiliary), and terminal 4 is set to speed command (speed control). To use the analog input terminal as torque command, torque limit, or magnetic flux command, set **Pr.868 Terminal 1 function assignment, Pr.858 Terminal 4 function assignment** to change the function. (Refer to page 395.)
  The magnetic flux command is valid under vector control only.

(2) Relationship between the analog input terminal function and the calibration parameter

• Calibration parameter according to the terminal 1 function

Pr.868 setting	Terminal function	Calibration parameter	
		Bias setting	Gain setting
0 (initial value)	Frequency (speed) setting auxiliary	**C2 (Pr.902) Terminal 2 frequency setting bias frequency** **C3 (Pr.902) Terminal 2 frequency setting bias** **C5 (Pr.904) Terminal 4 frequency setting bias frequency** **C6 (Pr.904) Terminal 4 frequency setting bias**	**Pr.125 Terminal 2 frequency setting gain frequency** **C4 (Pr.903) Terminal 2 frequency setting gain** **Pr.126 Terminal 4 frequency setting gain frequency** **C7 (Pr.905) Terminal 4 frequency setting gain**
1	Magnetic flux command	**C16 (Pr.919) Terminal 1 bias command (torque/ magnetic flux)** **C17 (Pr.919) Terminal 1 bias (torque/magnetic flux)**	**C18 (Pr.920) Terminal 1 gain command (torque/ magnetic flux)** **C19 (Pr.920) Terminal 1 gain (torque/magnetic flux)**
2	Regenerative driving torque limit	**C16 (Pr.919) Terminal 1 bias command (torque/ magnetic flux)** **C17 (Pr.919) Terminal 1 bias (torque/magnetic flux)**	**C18 (Pr.920) Terminal 1 gain command (torque/ magnetic flux)** **C19 (Pr.920) Terminal 1 gain (torque/magnetic flux)**
3	Torque command		
4	Stall prevention operation level *1 /torque limit/torque command		
5	Forward/reverse rotation speed limit	**C12 (Pr.917) Terminal 1 bias frequency (speed)** **C13 (Pr.917) Terminal 1 bias (speed)**	**C14 (Pr.918) Terminal 1 gain frequency (speed)** **C15 (Pr.918) Terminal 1 gain (speed)**
6	Torque bias input	**C16 (Pr.919) Terminal 1 bias command (torque/ magnetic flux)** **C17 (Pr.919) Terminal 1 bias (torque/magnetic flux)**	**C18 (Pr.920) Terminal 1 gain command (torque/ magnetic flux)** **C19 (Pr.920) Terminal 1 gain (torque/magnetic flux)**
9999	No function	—	—

*1 Adjustment of the bias and gain for stall prevention operation level is done by **Pr.148 Stall prevention level at 0 V input and Pr.149 Stall prevention level at 10 V input**.

三菱科技有限公司
購買、維修 此手冊零組件
電話： 037-466333
Email: service@repairtw.com
Line id: @zzzz
www.repairtw.com

• Calibration parameter according to the terminal 4 function

Pr.858 setting	Terminal function	Calibration parameter	
		Bias setting	Gain setting
0 (initial value)	Frequency (speed) command/ Speed limit	**C5 (Pr.904) Terminal 4 frequency setting bias frequency** **C6 (Pr.904) Terminal 4 frequency setting bias**	**Pr.126 Terminal 4 frequency setting gain frequency** **C7 (Pr.905) Terminal 4 frequency setting gain**
1	Magnetic flux command	**C38 (Pr.932) Terminal 4 bias command (torque/ magnetic flux)** **C39 (Pr.932) Terminal 4 bias (torque/magnetic flux)**	**C40 (Pr.933) Terminal 4 gain command (torque/ magnetic flux)** **C41 (Pr.933) Terminal 4 gain (torque/magnetic flux)**
4	Stall prevention operation level *2 /torque limit	**C38 (Pr.932) Terminal 4 bias command (torque/ magnetic flux)** **C39 (Pr.932) Terminal 4 bias (torque/magnetic flux)**	**C40 (Pr.933) Terminal 4 gain command (torque/ magnetic flux)** **C41 (Pr.933) Terminal 4 gain (torque/magnetic flux)**
9999	No function	—	—

*2 Adjustment of the bias and gain for stall prevention operation level is done by **Pr.148 Stall prevention level at 0 V input and Pr.149 Stall prevention level at 10 V input**.

(3) Change the torque at maximum analog input. (C18 (Pr.920), C40 (Pr.933))

• To only change the torque setting (gain) of the maximum analog input voltage (current), set to **C18 (Pr.920), C40 (Pr.933)**.

(4) Calibration of analog input bias and gain (C16 (Pr.919) to C19 (Pr.920), C38 (Pr.932) to C41 (Pr.933))

- The "bias" and "gain" functions are used to adjust the relationship between the setting input signal such as 0 to 5 VDC/0 to 10 VDC or 4 to 20 mADC entered from outside for torque command or setting the torque limit and the torque.
- Set the bias torque of the terminal 1 input using **C16 (Pr.919)**. (Shipped from factory with torque for 0 V)
- Set the torque against the torque command voltage set by **Pr.73 Analog input selection** with **C18(Pr.920)**. (Initial value is 10 V.)
- Set the bias torque of the terminal 4 input using **C38 (Pr.932)**. (The initial value is the torque for 4 mA.)
- Set the torque against the 20 mA for torque command current (4 to 20 mA) with **C40 (Pr.933)**.

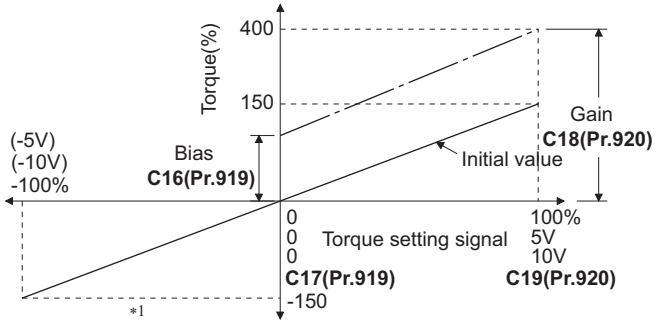

Calibration example of terminal 1

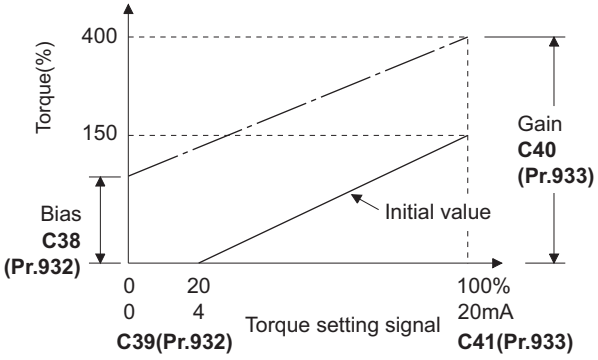

Calibration example of terminal 4

*1 A negative voltage (0V to -10 V (-5 V)) is valid as a torque command.
If a negative voltage is input as a torque limit value, the torque limit is regarded as "0".

- There are three methods to adjust the torque setting voltage (current) bias and gain.

  (a) Method to adjust arbitrary point with application of a voltage (current) between terminals 1 and 5 (4 and 5). ☞page 409

  (b) Method to adjust arbitrary point without application of a voltage (current) between terminals 1 and 5 (4 and 5). ☞page 410

  (c) Method to adjust only torque without adjusting voltage (current). ☞page 411

上正科技有限公司
購買、維修 此手冊零組件
電話： 037460333
Email: service@repairtw.com
Line id: @zzzz
www.repairtw.com

REMARKS

- Always calibrate the input after changing the voltage/input signal with **Pr.73, Pr.267**, and the voltage/current input selection switch.

(5) Analog input display unit changing (Pr.241)

- The analog input display unit (%/V/mA) for analog input bias and gain calibration can be changed.
- Depending on the terminal input specification set to **Pr.73 and Pr.267**, the display units of **C17 (Pr.919), C19 (Pr.920), C39 (Pr.932), and C41 (Pr.933)** will change as shown below.

Analog command (terminals 1 and 4) (Depends on Pr.73, Pr.267)	Pr.241 = 0 (initial value)	Pr.241 = 1
0 to 5 V input	0 to 5 V → 0 to 100% (0.1%) display	0 to 100% → 0 to 5 V (0.01 V) display
0 to 10 V input	0 to 10 V → 0 to 100% (0.1%) display	0 to 100% → 0 to 10 V (0.01 V) display
0 to 20 mA input	0 to 20 mA → 0 to 100% (0.1%) display	0 to 100% → 0 to 20 mA (0.01 mA)

(6) Adjust method for the torque setting voltage (current) bias and gain

(a) Adjust any point with application of a voltage (current) between terminals 1 and 5 (4 and 5).

Operation

1. Screen at power-ON
The monitor display appears.

2. Changing the operation mode
Press PU EXT to choose the PU operation mode. [PU] indicator is on.
Calibration is also possible in the External operation mode.

3. Parameter setting mode
Press MODE to choose the parameter setting mode. (The parameter number read previously appears.)

4. Calibration parameter selection
Turn dial until C. . . . appears. Press SET to display C -- -- -- -- .

5. Selecting the parameter number
Turn dial to choose C 19 (**C19(Pr.920) Terminal 1 gain (torque/magnetic flux)**) for the terminal 1, and
C 41 (**C41(Pr.933) Terminal 4 gain (torque/magnetic flux)**) for the terminal 4.

6. Analog voltage (current) display
Press SET to display the analog voltage (current) % currently applied to the terminal 1 (4).
Do not touch dial until calibration is completed.

7. Voltage (current) application
Apply a 5 V (20 mA). (Turn the external potentiometer connected across terminals 1 and 5 (terminals 4 and 5) to a desired position.)

8. Setting completed
Press SET to enter the setting. The analog voltage (current) % and C 19 (C 41) flicker alternately.
- Turn dial to read another parameter.
- Press SET to return to the C -- -- -- -- display.
- Press SET twice to show the next parameter.

上正科技有限公司
購買 維修 此手冊零組件
電話： 037-466333
Email: service@repairtw.com
Line Id: @2222
www.repairtw.com

(b) Adjust any point without application of a voltage (current) between terminals 1 and 5 (4 and 5).

Operation

1. Screen at power-ON

The monitor display appears.

2. Changing the operation mode

PU/EXT Press PU/EXT to choose the PU operation mode. [PU] indicator is on.

Calibration is also possible in the External operation mode.

3. Parameter setting mode

Press MODE to choose the parameter setting mode. (The parameter number read previously appears.)

4. Calibration parameter selection

Turn ◎ until C. . . . appears. Press SET to display C -- -- -- -- .

5. Selecting the parameter number

Turn ◎ to choose C 19 **C19(Pr.920) Terminal 1 gain (torque/magnetic flux)** for the terminal 1, and

C 41 **C41(Pr.933) Terminal 4 gain (torque/magnetic flux)** for the terminal 4.

6. Analog voltage (current) display

Press SET to display the analog voltage (current) % currently applied to the terminal 1 (4).

7. Analog voltage (current) adjustment

When ◎ is turned, the gain voltage (current) % currently set to the parameter is displayed.

Turn ◎ until the desired gain voltage (current) % is displayed.

8. Setting completed

Press SET to enter the setting. The analog voltage (current) % and C 19 (C 41) flicker alternately.

· Turn ◎ to read another parameter.

· Press SET to return to the C -- -- -- -- display.

· Press SET twice to show the next parameter.

上正科技有限公司
購買、維修 此手冊零組件
電話： 037-103333
Email: service@repairtw.com
Line Id: @zzzz
www.repairtw.com

REMARKS

By pressing ◎ after step 6, the present torque setting bias/gain setting can be confirmed.

Confirmation is not possible after executing step 7.

(c) Adjust only torque without adjustment of gain voltage (current).
(When changing the gain torque from 150% to 130%.)

Operation

1. Parameter selection

Turn  to choose C 18 **(Pr.920)** for the terminal 2, and C 40 **(Pr.933)** for the terminal 4.

Press SET to show the present set value. (150.00%)

2. Torque setting change

Turn  to change the set value to "130.00". (130.00%)

Press SET to enter the setting. "130.00" and "C 18 (C 40)" flicker alternately.

3. Checking the mode/monitor

Press MODE three times to change to the monitor / frequency monitor.

4. Start

Turn ON the start switch (STF or STR) to apply a voltage across terminals 1 and 5 (4 and 5),
Operation is performed with 130% torque.

REMARKS

- If the gain and bias of torque setting are too close, an error (Er3) may displayed at setting.
- For operation outline of the parameter unit (FR-PU07), refer to the Instruction Manual of the FR-PU07.
- Set the bias torque setting using the **calibration parameter C16 (Pr.919)** or **C38 (Pr.932)**. (Refer to page 408.)

上正科技有限公司
購買、維修 此手冊零組件
電話： 037-466333
Email: service@epitw.com
Line id: @zzzz
www.repairtw.com

⚠ Caution

⚠ Be cautious when setting any value other than "0" as the bias torque at 0 V (0 mA). Even if a torque command is not given, simply turning ON the start signal will start the motor at the preset frequency.

♦ Parameters referred to ♦

Pr.20 Acceleration/deceleration reference frequency ☞ page 278

Pr.73 Analog input selection, Pr.267 Terminal 4 input selection ☞ page 391

Pr.79 Operation mode selection ☞ page 299

Pr.858 Terminal 4 function assignment, Pr.868 Terminal 1 function assignment ☞ page 395

5.12.7 Checking of current input on analog input terminal

When current is input to the analog input terminal 2 and terminal 4, operation when the current input has gone below the specified level (loss of analog current input) can be selected. It is possible to continue the operation even when the analog current input is lost.

Pr.	Name	Initial value	Setting range	Description
573 T052	**4 mA input check selection**	9999	1	Continues the operation with output frequency before the current input loss.
			2	4 mA input fault is activated when the current input loss is detected.
			3	Decelerates to stop when the current input loss is detected. After it is stopped, 4 mA input fault (E.LCI) is activated.
			4	Continues operation with the **Pr.777** setting.
			9999	No current input check
777 T053	**4 mA input fault operation frequency**	9999	0 to 590 Hz	Set the running frequency for current input loss. (Valid when **Pr.573** = "4")
			9999	No current input check when **Pr.573** = "4"
778 T054	**Current input check filter**	0 s	0 to 10 s	Set the current input loss detection time.

(1) Analog current input loss condition (Pr.778)

上正科技有限公司
購買、維修 此手冊零組件
電話： 037-466335
Email: service@repairtw.com
Line id: @zzzz
www.repairtw.com

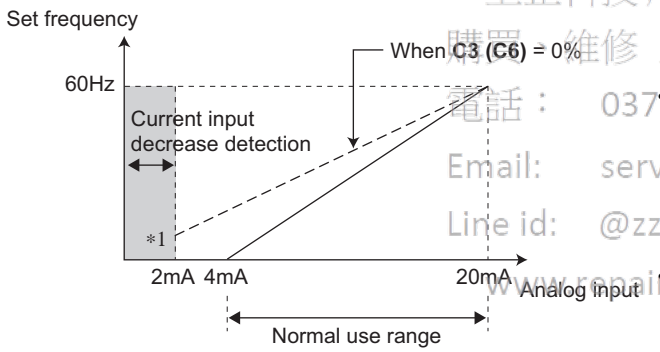

*1 When the **Pr.573** ≠ "9999" and terminal 4 (terminal 2) is calibrated to 2 mA or less with **C2 (Pr.902) (C5 (Pr.904))**, analog input frequency that is 2 mA or less will become input current loss, thus it will not be as the bias setting frequency.

- When the condition of current input to the terminal 4 (terminal 2) continues to be 2 mA or less for **Pr.778** setting time, it is considered as loss of analog current input and alarm (LF) signal is turned ON. The LF signal will turn OFF when the current input becomes 3 mA or higher.
- For the LF signal, set "98 (positive logic) or 198 (negative logic)" in any of **Pr.190 to Pr.196 (output terminal function selection)** to assigns the function.

REMARKS

- Changing the terminal assignment using **Pr.190 to Pr.196 (output terminal function selection)** may affect the other functions. Set parameters after confirming the function of each terminal.

(2) Continue operation at analog current input loss (Pr.573 = "1, 4", Pr.777)

- When **Pr.573** = "1", operation is continued with the output frequency before the current input loss.
- When **Pr.573** = "4" and **Pr.777** ≠ "9999", operation is continued with frequency set in **Pr.777**.
- When the start command is turned OFF during the input current loss, deceleration stop is immediately performed, and the operation is not restored even if start command is input again.
- When the current input is restored, the LF signal is turned OFF, and operation is performed according to the current input.
- External operation

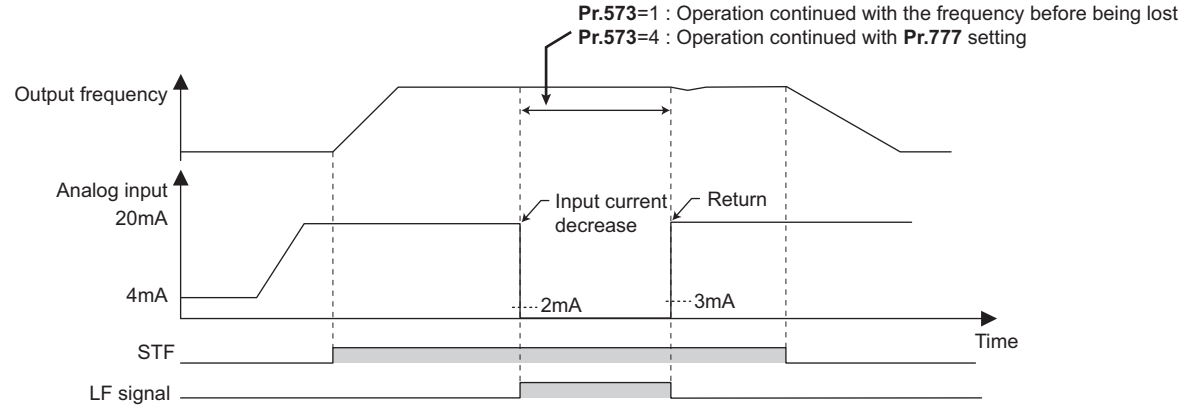

- PID control (reverse action)

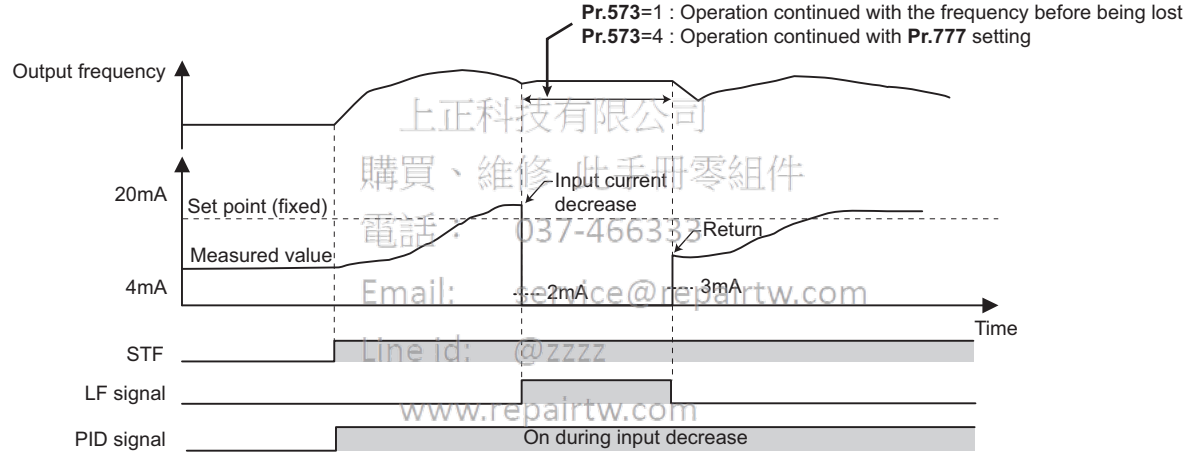

上正科技有限公司
購買、維修 此手冊零組件
電話: 037-466337
Email: service@repairtw.com
Line id: @zzzz
www.repairtw.com

REMARKS

- When the setting is changed to continuously operate after the input current loss (**Pr.573** = "1, 4"), the motor will operate as the frequency before loss is 0 Hz.

(3) Fault output (Pr.573 = "2")

- When the analog current input becomes 2 mA or lower, 4 mA input fault (E.LCI) will be activated and the output is shut off.
- PID control (reverse action)

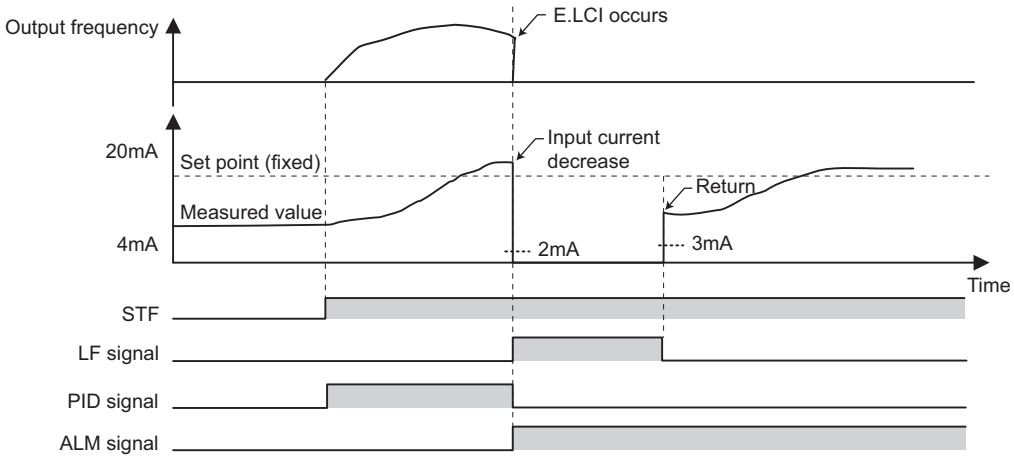

(4) Fault output after deceleration to stop (Pr.573 = "3")

- When the analog current input becomes 2 mA or lower, 4 mA input fault (E.LCI) will be activated after the deceleration stop and the output is shut off.
- When the analog current input is restored during the deceleration, it will accelerate again and operate according to the current input.
- PID control (reverse action)

上正科技有限公司
購買、維修 此手冊零組件
電話： 037-466333
Email: service@repairtw.com
Line id: @zzzz
www.repairtw.com

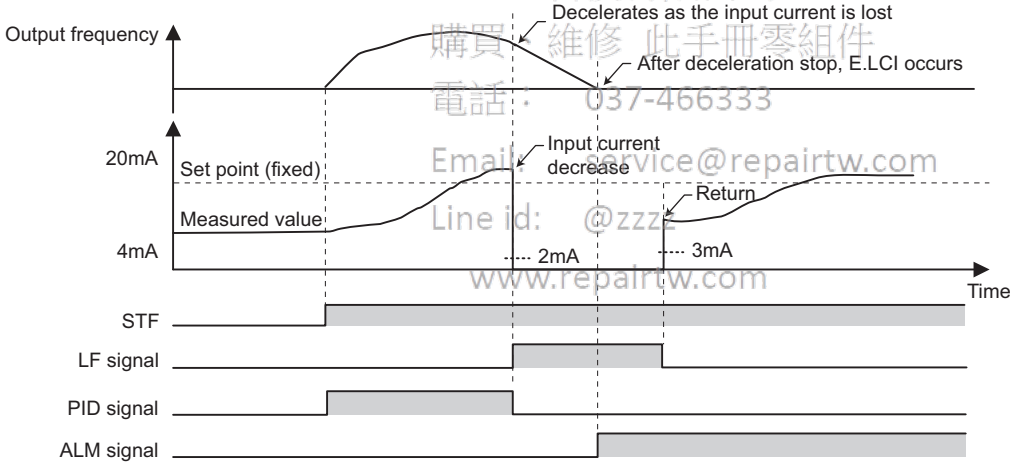

- The analog input current is restored during deceleration under PID control (reverse action)

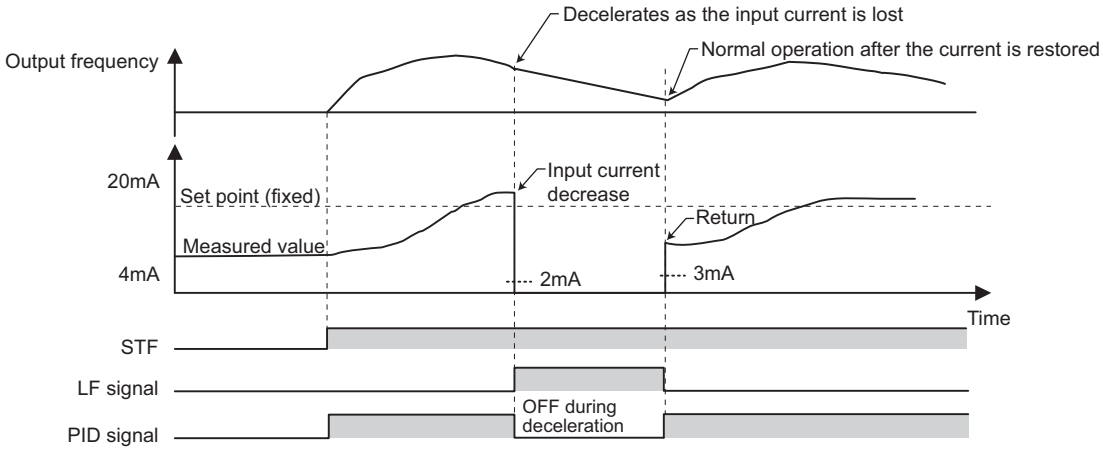

(5) Function related to current input check

Function	Operation	Refer to page
Minimum frequency	When the operation continues, setting of the minimum frequency against the running frequency is valid even during the current input loss.	334
Multi-speed operation	The multi-speed setting signal is prioritized even during current input loss (operate according to multi-speed setting even during operation in continuous frequency or during deceleration stop). When the multi-speed setting signal is turned OFF due to input current loss condition during the multi-speed operation, it will perform deceleration stop even if it is set to continue operation for current input loss.	319
JOG operation	JOG operation is prioritized even during current input loss (switch to JOB operation even during operation with continuous frequency or during deceleration stop). When the JOG signal is turned OFF due to input current loss condition during the JOG operation, it will perform deceleration stop even if it is set to continue operation for current input loss.	318
MRS signal	MRS signal is enabled even during current input loss (output is shut off with MRS signal ON even during operation with continuous frequency or during deceleration stop).	419
Remote setting	During operation with remote setting and transferred to operation continuation due to input current loss, acceleration, deceleration, and clear by the remote setting is invalid. They will become valid after restoring the current input loss.	288
Retry function	When the protective function has operated during the operation continuation due to current input loss, and retry was a success, operation will continue without clearing the operation continuation frequency.	332
Added compensation, override compensation	During operation with added compensation or override compensation and transferred to operation continuation due to input current loss, added compensation and override compensation will become invalid. They will become valid after restoring the current input loss.	396
Input filter time constant	Current input loss is detected with the value before the filter. Operation continuation before the input loss will use the value after the filter.	412
PID control	PID calculation is stopped during the current input loss. However, PID control will not be disabled (normal operation). During the pre-charge, end determination or fault determination by the pre-charge function will not be performed when the current input loss occurs. Sleep function is prioritized even during current input loss. When the clearing condition of the sleep function is met during the current input loss, operation is restored with continuation frequency.	483
Power failure stop	The power failure stop function is prioritized even if power failure current input loss is detected. Set frequency after the power failure stop and re-acceleration is the operation continuation frequency at the current input loss. When the E.LCI generation at the time of current input loss is selected, E.LCI will be generated after the power failure stop.	523
Traverse function	Traverse operation is performed based on frequency even during the operation continuation during current input loss.	467

昌昇科技有限公司
購買、維修 此手冊零組件
電話：0974 [illegible]
Email: service@repairtw.com
Line id: @zzz
www.repairtw.com

♦ Parameters referred to ♦

Pr.73 Analog input selection, Pr.267 Terminal 4 input selection ☞ page 391

5.12.8 Input terminal function selection

Use the following parameters to select or change the input terminal functions.

Pr.	Name	Initial value	Initial signal	Setting range
178 T700	**STF terminal function selection**	60	STF (Forward rotation command)	0 to 20, 22 to 28, 37, 42 to 47, 50, 51, 60, 62, 64 to 74, 76, 77 to 80, 87, 92, 93, 9999
179 T7001	**STR terminal function selection**	61	STR (Reverse rotation command)	0 to 20, 22 to 28, 37, 42 to 47, 50, 51, 61, 62, 64 to 74, 76, 77 to 80, 87, 92, 93, 9999
180 T702	**RL terminal function selection**	0	RL (Low-speed operation command)	0 to 20, 22 to 28, 37, 42 to 47, 50, 51, 62, 64 to 74, 76, 77 to 80, 87, 92, 93, 9999
181 T703	**RM terminal function selection**	1	RM (Middle-speed operation command)	
182 T704	**RH terminal function selection**	2	RH (High-speed operation command)	
183 T705	**RT terminal function selection**	3	RT (Second function selection)	
184 T706	**AU terminal function selection**	4	AU (Terminal 4 input selection)	
185 T707	**JOG terminal function selection**	5	JOG (Jog operation selection)	
186 T708	**CS terminal function selection**	6	CS (Electronic bypass function)	
187 T709	**MRS terminal function selection**	24	MRS (Output stop)	
188 T710	**STOP terminal function selection**	25	STOP (Start self-holding selection)	
189 T711	**RES terminal function selection**	62	RES (Inverter reset)	

上正科技有限公司
購買、維修 此手冊零組件
電話： 037-466333
Email: service@repairtw.com
Line id: @zzzz
www.repairtw.com

Pr.	Name	Initial value	Setting range	Description
699 T740	**Input terminal filter**	9999	5 to 50 ms	Set the time to delay the input terminal response.
			9999	No input terminal filter

(1) Input terminal function assignment

- Using **Pr.178 to Pr.189**, set the functions of the input terminals
- Refer to the following table and set the parameters.

Setting	Signal name	Function		Related parameter	Refer to page
0	RL	**Pr.59** = 0 (initial value)	Low-speed operation command	**Pr.4 to Pr.6, Pr.24 to Pr.27, Pr.232 to Pr.239**	319
		Pr.59 ≠ 0 *1	Remote setting (setting clear)	**Pr.59**	288
		Pr.270 = 1, 3, 11, 13 *2	Stop-on-contact selection 0	**Pr.270, Pr.275, Pr.276**	462
1	RM	**Pr.59** = 0 (initial value)	Middle-speed operation command	**Pr.4 to Pr.6, Pr.24 to Pr.27, Pr.232 to Pr.239**	319
		Pr.59 ≠ 0 *1	Remote setting (deceleration)	**Pr.59**	288
2	RH	**Pr.59** = 0 (initial value)	High-speed operation command	**Pr.4 to Pr.6, Pr.24 to Pr.27, Pr.232 to Pr.239**	319
		Pr.59 ≠ 0 *1	Remote setting (acceleration)	**Pr.59**	288
3	RT	Second function selection		**Pr.44 to Pr.51, Pr.450 to Pr.463, Pr.569, Pr.832, Pr.836, etc.**	420
		Pr.270 = 1, 3, 11, 13 *2	Stop-on-contact selection 1	**Pr.270, Pr.275, Pr.276**	462
4	AU	Terminal 4 input selection		**Pr.267**	391
5	JOG	Jog operation selection		**Pr.15, Pr.16**	318
6	CS	Electronic bypass function		**Pr.57, Pr.58, Pr.162 to Pr.165, Pr.299, Pr.611**	511, 517
		Commercial power supply-inverter switchover function		**Pr.57, Pr.58, Pr.135 to Pr.139, Pr.159**	450
7	OH	External thermal relay input *3		**Pr.9**	322

Setting	Signal name	Function	Related parameter	Refer to page
8	REX	15-speed selection (Combination with multi-speeds of RL, RM, and RH)	**Pr.4 to Pr.6, Pr.24 to Pr.27, Pr.232 to Pr.239**	319
9	X9	Third function selection	**Pr.110 to Pr.116**	420
10	X10	Inverter run enable signal (FR-HC2/FR-CV connection)	**Pr.30, Pr.70, Pr.599**	593
11	X11	FR-HC2 connection, instantaneous power failure detection	**Pr.30, Pr.70**	593
12	X12	PU operation external interlock	**Pr.79**	299
13	X13	External DC injection brake operation start	**Pr.10 to Pr.12**	584
14	X14	PID control valid terminal	**Pr.127 to Pr.134, Pr.575 to Pr.577**	483
15	BRI	Brake opening completion signal	**Pr.278 to Pr.285**	457
16	X16	PU/External operation switchover (External operation with X16-ON)	**Pr.79, Pr.340**	299
17	X17	Load pattern selection forward/reverse rotation boost (For constant-torque with X17-ON)	**Pr.14**	580
18	X18	V/F switchover (V/F control with X18-ON)	**Pr.80, Pr.81, Pr.800**	160
19	X19	Load torque high-speed frequency	**Pr.270 to Pr.274**	465
20	X20	S-pattern acceleration/deceleration C switchover	**Pr.380 to Pr.383**	283
22	X22	Orientation command (for FR-A8AP) *4*6	**Pr.350 to Pr.369**	471
23	LX	Pre-excitation/servo ON *5	**Pr.850**	584
24	MRS	Output stop	**Pr.17**	419
		Commercial power supply-inverter switchover function	**Pr.57, Pr.58, Pr.135 to Pr.139, Pr.159**	450
25	STOP	Start self-holding selection	**Pr.250**	422
26	MC	Control mode switchover	**Pr.800**	160
27	TL	Torque limit selection	**Pr.815**	181
28	X28	Start-time tuning start external input	**Pr.95**	445
37	X37	Traverse function selection	**Pr.592 to Pr.597**	467
42	X42	Torque bias selection 1 (for FR-A8AP)*6	**Pr.840 to Pr.845**	198
43	X43	Torque bias selection 2 (for FR-A8AP)*6	**Pr.840 to Pr.845**	198
44	X44	P/PI control switchover (P control with X44-ON)	**Pr.820, Pr.821, Pr.830, Pr.831**	188
45	BRI2	Second brake sequence open completion	**Pr.641 to Pr.649**	457
46	TRG	Trace trigger input	**Pr.1020 to Pr.1047**	529
47	TRC	Trace sampling start/end	**Pr.1020 to Pr.1047**	529
50	SQ	Sequence start	**Pr.414**	527
60	STF	Forward rotation command (Assignable to the STF terminal **(Pr.178)** only)	**Pr.250**	422
61	STR	Reverse rotation command (Assignable to the STR terminal **(Pr.179)** only)	**Pr.250**	422
62	RES	Inverter reset	**Pr.75**	252
64	X64	PID forward/reverse action switchover	**Pr.127 to Pr.134**	483
65	X65	PU/NET operation switchover (PU operation with X65-ON)	**Pr.79, Pr.340**	299
66	X66	External/NET operation switchover (NET operation with X66-ON)	**Pr.79, Pr.340**	299
67	X67	Command source switchover (Command by **Pr.338, Pr.339** enabled with X67-ON)	**Pr.338, Pr.339**	308
68	NP	Simple position pulse train sign	**Pr.291, Pr.419 to Pr.430, Pr.464**	240
69	CLR	Simple position droop pulse clear	**Pr.291, Pr.419 to Pr.430, Pr.464**	240
70	X70	DC feeding operation permission	**Pr.30, Pr.70**	593
71	X71	DC feeding cancel	**Pr.30, Pr.70**	593
72	X72	PID integral value reset	**Pr.127 to Pr.134, Pr.575 to Pr.577**	483
73	X73	Second PID P control switchover	**Pr.127 to Pr.134, Pr.575 to Pr.577**	483
74	X74	Magnetic flux decay output shutoff signal	**Pr.850**	586
77	X77	Pre-charge end command	**Pr.760 to Pr.764**	499
78	X78	Second pre-charge end command	**Pr.765 to Pr.769**	499
79	X79	Second PID forward/reverse action switchover	**Pr.753 to Pr.758**	483
80	X80	Second PID control valid terminal	**Pr.753 to Pr.758**	483
87	X87	Sudden stop	**Pr.464 to Pr.494**	227
92	X92	Emergency stop	**Pr.1103**	278
93	X93	Torque limit selection	**Pr.1113**	213
9999	———	No function	———	———

*1 When **Pr.59 Remote function selection** ≠ "0", functions of the RL, RM, and RH signals will be changed as in the table.
*2 When **Pr.270 Stop-on contact/load torque high-speed frequency control selection** = "1, 3, 11, or 13", functions of the RL and RT signals will be changed as in the table.
*3 OH signal will operate with the relay contact "open".
*4 When stop position is to be input from external for orientation control, FR-A8AX (16-bit digital input) is required.
*5 Servo ON is enabled during the position control.
*6 Available when the plug-in option is connected. For details, refer to the Instruction Manual of the option.

此手冊零組件 Email: service@repairtw.com Line Id: @222 www.repairtw.com

REMARKS

- Same function can be assigned to two or more terminals. In this case, the logic of terminal input is OR.
- Priority of the speed command is JOG > multi-speed setting (RH, RM, RL, REX) > PID (X14).
- When the (X10) signal is not set up, **Pr.79 Operation mode selection** = "7", and PU operation external interlock (X12) signal is Inverter run enable signal.
- Same signal is used to assign multi-speed (7 speed) and remote setting. Setting cannot be performed individually.
- When the Load pattern selection forward/reverse rotation boost (X17) signal is not assigned, RT signal will share this function.
- If **Pr.419=** "2" (simple pulse train position command) is set, the terminal JOG is used for the simple position pulse train input regardless of the **Pr.291 Pulse train I/O selection** pulse train input/output selection setting.
- When the terminal assignment is changed using **Pr.178 to Pr.189 (input terminal function selection)**, the terminal name will be different, which may result in an error of wiring, or affect other functions. Set parameters after confirming the function of each terminal.

(2) Adjusting the response of input terminal (Pr.699)

- Response of the input terminal can be delayed in a range between 5 to 50 ms. (Example of STF signal operation)

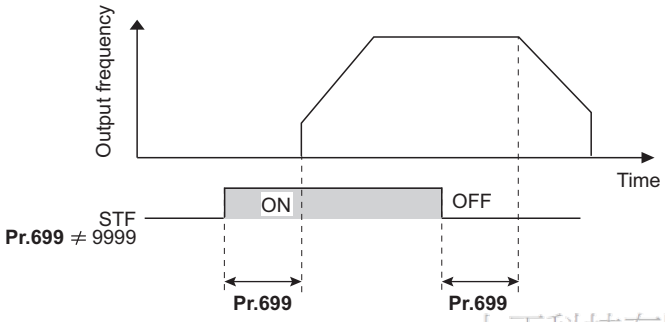

上正科技有限公司
購買、維修 此手冊零組件
電話： 037-466333
Email: service@repairtw.com
Line id: @zzzz
www.repairtw.com

REMARKS

- Setting of **Pr.699** is disabled (no filter) in the following cases.
- Input terminal is already turned ON when the power is turned ON
- Input signal used for the PLC function
- Inverter run enable signal (X10) signal, Simple position pulse train sign (NP) signal, Simple position droop pulse clear (CLR) signal

5.12.9 Inverter output shutoff signal

The inverter output can be shut off with the MRS signal. The logic of the MRS signal can also be selected.

Pr.	Name	Initial value	Setting range	Description
17 T720	MRS input selection	0	0	Normally open input
			2	Normally closed input (NC contact input specification)
			4	External terminal: Normally closed input (NC contact input specification) Communication: Normally open input

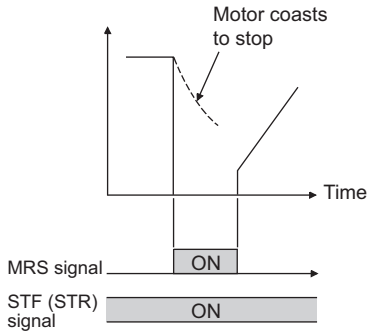

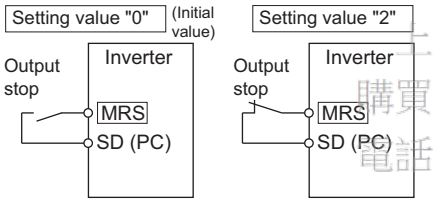

(1) About output shutoff signal (MRS signal)

- When the Output stop (MRS) signal is turned ON while operating the inverter, the inverter output is instantaneously shut off.
- The response time of the MRS signal is within 2 ms.
- Terminal MRS may be used as described below.

(a) To use a mechanical brake (e.g. electromagnetic brake) to stop the motor
The inverter output is shut off when the mechanical brake operates.

(b) To provide interlock to disable operation by the inverter
With the MRS signal ON, the inverter cannot be operated even if the start signal is entered into the inverter.

(c) To coast the motor to a stop
When the start signal is turned OFF, the inverter decelerates the motor to a stop in the preset deceleration time, but when the MRS signal is turned ON, the motor coasts to a stop.

(2) MRS signal logic inversion (Pr.17 = "2")

- When **Pr.17** = "2", the MRS signal can be changed to normally closed (NC contact) specification. The inverter will shut off the output with MRS signal turned ON (opened).

三正科技有限公司
購買、維修 此手冊零組件
電話：
Email:
Line Id:
www.repairtw.com

(3) Assigning a different action for each MRS signal input via communication and external terminal (Pr.17 = "4")

- When **Pr.17** = "4", the MRS signal from an external terminal can be set as the normally closed (NC contact) input, and the MRS signal from communication as the normally open (NO contact) input. This function is useful to perform operation by communication with MRS signal from external terminal remained ON.

External MRS	Communication MRS	Pr.17 setting		
		0	2	4
OFF	OFF	Operation enabled	Output shutoff	Output shutoff
OFF	ON	Output shutoff	Output shutoff	Output shutoff
ON	OFF	Output shutoff	Output shutoff	Operation enabled
ON	ON	Output shutoff	Operation enabled	Output shutoff

REMARKS

- The MRS signal is assigned to the terminal MRS in the initial status. By setting "24" in either **Pr.178 to Pr.189 (input terminal function selection)**, the RT signal can be assigned to the other terminal.
- When using an external terminal to input the MRS signal, the MRS signal shuts off the output in any of the operation modes.
- MRS signal is valid from either of communication or external, but when the MRS signals is to be used as Inverter run enable signal (X10), it is required to input from external.
- When the terminal assignment is changed using **Pr.178 to Pr.189 (input terminal function selection)**, the terminal name will be different, which may result in an error of wiring, or affect other functions. Set parameters after confirming the function of each terminal.

♦ Parameters referred to ♦

Pr.178 to Pr.189 (input terminal function selection) ☞ page 416

5.12.10 Selecting operation condition of the second function selection signal (RT) and the third function selection signal (X9)

Second (third) function can be selected by the RT (X9) signal.
Operating condition (validity condition) for second (third) function can be also set.

Pr.	Name	Initial value	Setting range	Description
155 T730	RT signal function validity condition selection	0	0	Second (third) function is immediately enabled with ON of RT (X9) signal.
			10	Second (third) function will be enabled while RT (X9) signal is ON and running in constant speed. (Disabled while accelerating or decelerating)

- Turning ON the Second function selection (RT) signal enables the second functions.
- Turning ON the Third function selection (X9) enables the third functions. For the X9 signal, set "9" in **Pr.178 to 189 (input terminal function selection)** to assign the function.
- The following table lists application examples of the second (third) functions.
  (a) Switching between regular use and emergency use
  (b) Switching between heavy load and light load
  (c) Change the acceleration/deceleration time by break point acceleration/deceleration
  (d) Switching characteristics of main motor and sub motor

Connection diagram for second function selection

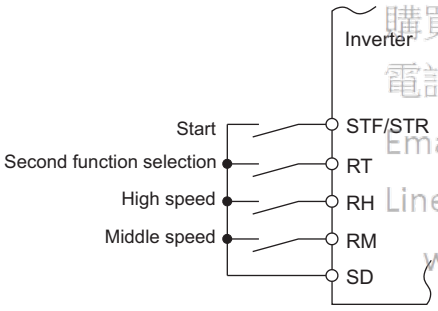

Example of second acceleration/deceleration time

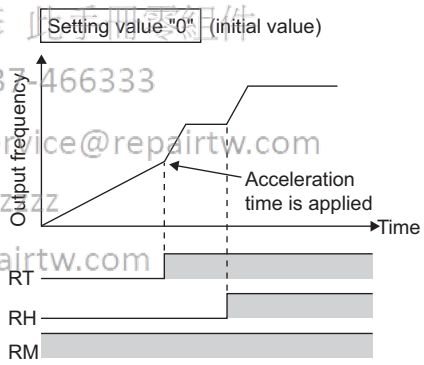

上正科技有限公司
購買、維修 進口品零組件
電話： 037-466333
Email: service@repairtw.com
Line id: @zzzz
www.repairtw.com

• When the RT (X9) signal is ON, the following second (third) functions are selected at the same time.

Function	First function Parameter number	Second function Parameter number	Third function Parameter number	Refer to page
Torque boost	**Pr.0**	**Pr.46**	**Pr.112**	577
Base frequency	**Pr.3**	**Pr.47**	**Pr.113**	578
Acceleration time	**Pr.7**	**Pr.44**	**Pr.110**	278
Deceleration time	**Pr.8**	**Pr.44, Pr.45**	**Pr.110, Pr.111**	278
Electronic thermal O/L relay *1	**Pr.9**	**Pr.51**	*2	322
Free thermal *1	**Pr.600 to Pr.604**	**Pr.692 to Pr.696**	*2	
Stall prevention	**Pr.22**	**Pr.48, Pr.49**	**Pr.114, Pr.115**	336
Applicable motor *1	**Pr.71**	**Pr.450**	*2	424
Motor constant *1	**Pr.80 to Pr.84, Pr.89 to Pr.94, Pr.298, Pr.702, Pr.706, Pr.707, Pr.711, Pr.712, Pr.717, Pr.721, Pr.724, Pr.725, Pr.859**	**Pr.453 to Pr.457, Pr.560, Pr.569, Pr.458 to Pr.462, Pr.738 to Pr.747, Pr.860**	*2	428, 438
Offline auto tuning *1	**Pr.96**	**Pr.463**	*2	428, 438
Online auto tuning *1	**Pr.95**	**Pr.574**	*2	445
PID control	**Pr.127 to Pr.134**	**Pr.753 to Pr.758**	*2	483
PID Pre-charge function	**Pr.760 to Pr.764**	**Pr.765 to Pr.769**	*2	499
Brake sequence *1	**Pr.278 to Pr.285, Pr.639, Pr.640**	**Pr.641 to Pr.648, Pr.650, Pr.651**	*2	457
Low-speed range torque characteristics *1	**Pr.788**	**Pr.747**	*2	173
Motor control method *1	**Pr.800**	**Pr.451**	*2	160
Speed control gain	**Pr.820, Pr.821**	**Pr.830, Pr.831**	*2	188
Analog input filter	**Pr.822, Pr.826**	**Pr.832, Pr.836**	*2	398
Speed detection filter	**Pr.823**	**Pr.833**	*2	248
Torque control gain	**Pr.824, Pr.825**	**Pr.834, Pr.835**	*2	219
Torque detection filter	**Pr.827**	**Pr.837**	*2	248

上正科技有限公司 購買・維修 此手冊零組件 電話： 037-466333 email: service@repairtw.com line id: @zzzz www.repairtw.com

*1 The function can be changed by switching the RT signal ON/OFF while the inverter is stopped. If a signal is switched during operation, the operation method changes after the inverter stops. (**Pr.450** ≠ 9999)

*2 When the RT signal is OFF, the first function is selected and when it is ON, the second function is selected.

REMARKS

- RT signal is assigned to the terminal RT in the initial status. Set "3" in any of **Pr.178 to Pr.189 (input terminal function selection)** to assign the RT signal to another terminal.
- When both the RT signal and X9 signal are ON, the X9 signal (third function) is prioritized.
- Changing the terminal assignment using **Pr.178 to Pr.189 (input terminal function selection)** may affect the other functions. Set parameters after confirming the function of each terminal.

♦ Parameters referred to ♦

Pr.178 to Pr.189 (input terminal function selection) ☞ page 416

5.12.11 Start signal operation selection

Operation of start signal (STF/STR) can be selected.
Select the stopping method (deceleration to stop or casting) at turn-OFF of the start signal.
Use this function to stop a motor with a mechanical brake at turn-OFF of the start signal.

Pr.	Name	Initial value	Setting range	Description	
				Start signal (STF/STR)	Stop operation (Refer to page 592.)
250 G106	Stop selection	9999	0 to 100 s	STF signal: Forward rotation start STR signal: Reverse rotation start	Turn OFF the start signal and it will coast to stop after the specified time period. When set to 1000 s to 1100 s, it will coast to stop after (**Pr.250** - 1000) s.
			1000 s to 1100 s	STF signal: Start signal STR signal: Forward/reverse rotation signal	
			9999	STF signal: Forward rotation start STR signal: Reverse rotation start	It will perform deceleration stop when the start signal is turned OFF.
			8888	STF signal: Start signal STR signal: Forward/reverse rotation signal	

(1) 2-wire type (STF, STR signal)

- The following figure shows the connection in 2-wire type.
- As an initial setting, forward/reverse rotation signals (STF/STR) acts as both start and stop signals. Either one turned ON will be enabled, and the operation will follow that signal. The motor will perform a deceleration stop when both are turned OFF (or both are turned ON) during the operation.
- There are methods such as inputting 0 to 10 VDC between the speed setting input terminals 2 and 5, or **Pr.4 to Pr.6 multi-speed setting (fast, medium, slow)** for the frequency setting signal. (For multi-speed operation, refer to page 319.)
- By setting **Pr.250** = "1000 to 1100, 8888", STF signal becomes start command and STF signal becomes forward/reverse command.

上正科技有限公司
購買、維修 此手冊零組件
電話： 037-466333
Email: service@repairtw.com
Line id: @zzzz
www.repairtw.com

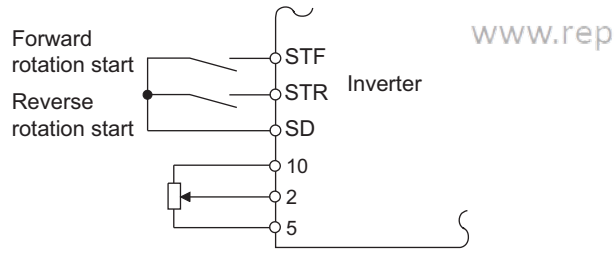

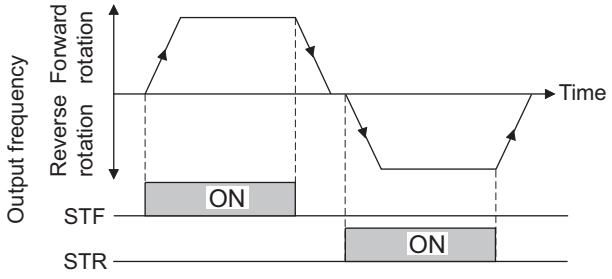

2-wire type connection example (Pr.250 = "9999")

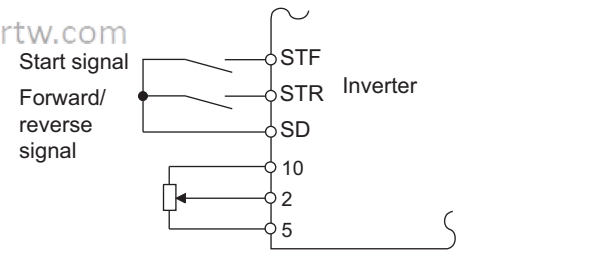

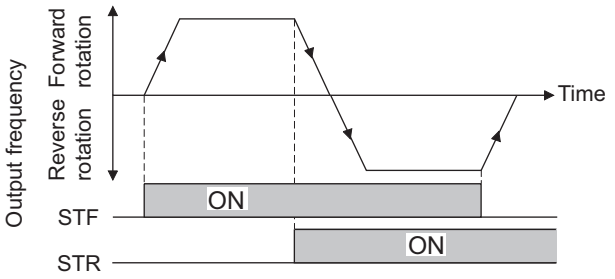

2-wire type connection example (Pr.250 = "8888")

REMARKS

- By setting **Pr.250** = "0 to 100, 1000 to 1100", it will perform coast to stop when the start command is turned OFF. (Refer to page 592.)
- The STF and STR signals are assigned to the STF and STR terminals in the initial status. STF signal can be assigned to a terminal by **Pr.178 STF terminal function selection**, and STR signal can be assigned to a terminal by **Pr.179 STR terminal function selection**.

(2) 3-wire type (STF, STR, STOP signal)

- The following figure shows the connection in 3-wire type.
- Start self-holding function is enabled when the STOP signal is turned ON. In such case, forward/reverse signal will only operate as start signal.
- Even if start signal (STF or STR) is turned ON and then OFF, the start signal will be maintained and it will start. To change the rotation direction, turn STR (STF) ON once and then OFF.
- The inverter will perform deceleration stop by turning the STOP signal OFF once.

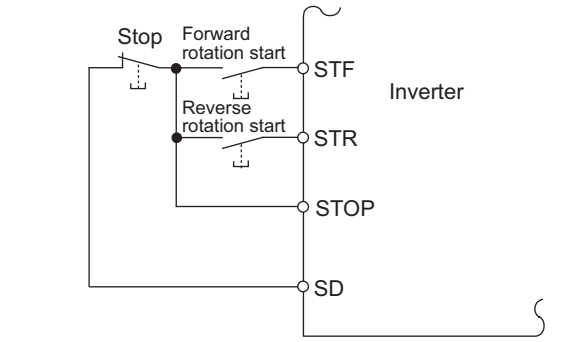

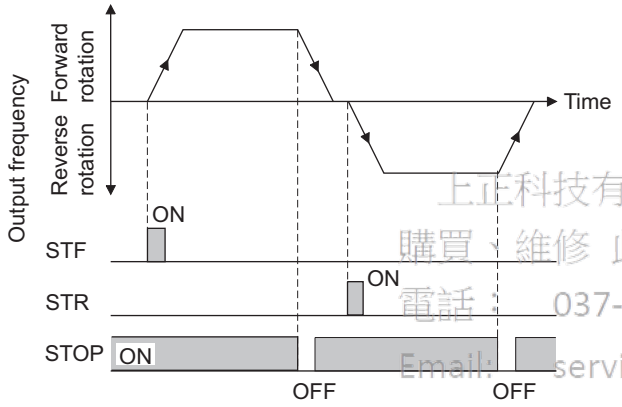

3-wire type connection example (Pr.250 = "9999")

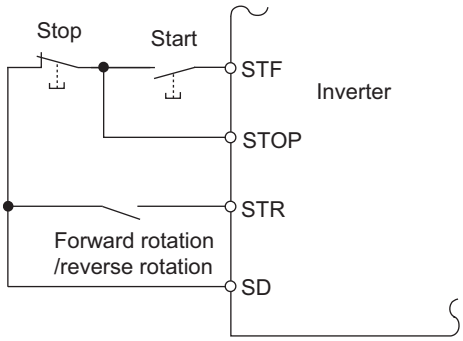

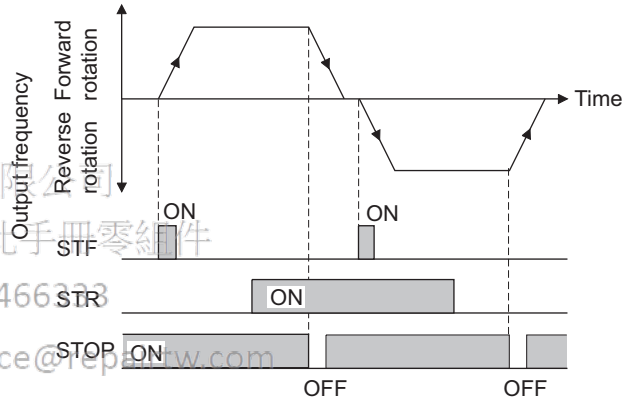

3-wire type connection example (Pr.250 = "8888")

上正科技有限公司
購買、維修 此手冊零組件
電話： 037-466333
Email: service@repairtw.com
line id: @zzzz
www.repairtw.com

REMARKS

- The STOP signal is assigned to the STOP terminal by the initial setting. Set "25" in any of **Pr.178 to Pr.189** to assign the STOP signal to another terminal.
- When the JOG operation is enabled by turning ON the JOG signal, STOP signal will be disabled.
- Even when the output is stopped by turning ON the MRS signal, self-holding function is not canceled.

(3) Start signal selection

STF	STR	Pr.250 setting and inverter condition	
		0 to 100 s, 9999	1000 s to 1100 s, 8888
OFF	OFF	Stop	Stop
OFF	ON	Reverse rotation	
ON	OFF	Forward rotation	Forward rotation
ON	ON	Stop	Reverse rotation

♦ Parameters referred to ♦

Pr.4 to Pr.6 (multi-speed setting) ☞ page 319

Pr.178 to Pr.189 (input terminal function selection) ☞ page 416

5.13 (C) Motor constant parameters

Purpose	Parameter to set			Refer to page
To select the motor to be used	Applicable motor	P.C100, P.C200	Pr.71, Pr.450	424
To run by maximizing the performance of the induction and vector motors	Offline auto tuning	P.C000, P.C100 to P.C105, P.C107, P.C108, P.C110, P.C120 to P.C126, P.C200 to P.C205, P.C207, P.C208, P.C210 and P.C220 to P.C226	Pr.9, Pr.51, Pr.71, Pr.80 to Pr.84, Pr.90 to Pr.94, Pr.96, Pr.453 to Pr.463, Pr.684, Pr.707, Pr.724, Pr.744, Pr.745, Pr.859 and Pr.860	428
To run by maximizing the performance of the PM motor	PM motor offline auto tuning	P.C000, P.C100 to P.C108, P.C110, P.C120, P.C122, P.C123, P.C126, P.C130 to P.C133, P.C150, P.C182, P.C185, P.C200 to P.C208, P.C210, P.C220, P.C222, P.C223, P.C226, P.C230 to P.C233, P.C282 and P.C285	Pr.9, Pr.51, Pr.71, Pr.80, Pr.81, Pr.83, Pr.84, Pr.90, Pr.92, Pr.93, Pr.96, Pr.450, Pr.453, Pr.454, Pr.456 to Pr.458, Pr.460, Pr.461, Pr.463, Pr.684, Pr.702, Pr.706, Pr.707, Pr.711, Pr.712, Pr.717, Pr.721, Pr.724, Pr.725, Pr.738 to Pr.747, Pr.788, Pr.859, Pr.860 and Pr.1000	438
To perform high accuracy operation without being affected by temperature and high-torque/ultra-low speed	Online auto tuning	P.C111 and P.C211	Pr.95, Pr.574	428
To use the motor with encoder	Encoder specifications	P.C140 and P.C141	Pr.359 and Pr.369	68
To detect signal loss of encoder signals	Signal loss detection	P.C148	Pr.376	448

上正科技有限公司
購買、維修 此手冊零組件
電話： 037-466333
Email: service@repairtw.com
line id: @zzzz
www.repairtw.com

5.13.1 Applied motor (Pr.71, Pr.450)

By setting the applied motor type, the thermal characteristic appropriate for the motor can be selected.
When using a constant-torque or PM motor, the electronic thermal O/L relay is set according to the used motor.
If the Advanced magnetic flux vector control, Real sensorless vector control, vector control or PM sensorless vector control is selected, the motor constant necessary for control (SF-JR, SF-HR, SF-JRCA, SF-HRCA, SF-V5RU (1500 r/min series), MM-CF, etc.) is also selected at the same time.

Pr.	Name	Initial value	Setting range	Description
71 C100	Applied motor	0	0 to 6, 13 to 16, 20, 23, 24, 30, 33, 34, 40, 43, 44, 50, 53, 54, 70, 73, 74, 330, 333, 334, 8090, 8093, 8094, 9090, 9093, 9094	By selecting a motor, the thermal characteristic and motor constant of each motor are set.
450 C200	Second applied motor	9999	0, 1, 3 to 6, 13 to 16, 20, 23, 24, 30, 33, 34, 40, 43, 44, 50, 53, 54, 70, 73, 74, 330, 333, 334, 8093, 8094, 9090, 9093, 9094	Set it when using the second motor. (the same specifications as **Pr.71**)
			9999	The function is disabled.

(1) Setting the applied motor

- Refer to the following list and set the parameters according to the applied motor.

Pr.71	Pr.450	Motor	Constant value range when performing offline auto tuning (increment)	Operational characteristic of the electronic thermal O/L relay		
				Standard	Constant-torque	PM
0 (**Pr.71** initial value)		Standard motor (such as SF-JR)	**Pr.82(Pr.455) and Pr.859(Pr.860)** • 0 to 500 A, 9999 (0.01 A)*2 • 0 to 3600 A, 9999 (0.1 A)*3 **Pr.90(Pr.458) and Pr.91(Pr.459)** • 0 to 50 Ω, 9999 (0.001 Ω)*2 • 0 to 400 mΩ, 9999 (0.01 mΩ)*3 **Pr.92(Pr.460) and Pr.93(Pr.461) (Induction motor)** • 0 to 6000 mH, 9999 (0.1 mH)*2 • 0 to 400 mH, 9999 (0.01 mH)*3 **Pr.92(Pr.460) and Pr.93(Pr.461) (PM motor)** • 0 to 500 mH, 9999 (0.01 mH)*2 • 0 to 50 mH, 9999 (0.001 mH)*3 **Pr.94(Pr.462)** • 0 to 100%, 9999(0.1%)*2 • 0 to 100%, 9999(0.01%)*3 **Pr.706(Pr.738)** • 0 to 5000 mV/(rad/s), 9999 (0.1 mV/(rad/s))	○		
1		Constant-torque motor (SF-JRCA, etc.) SF-V5RU (other than 1500 r/min series)			○	
2	—	Standard motor (such as SF-JR) Adjustable 5 points V/F (Refer to **page 583**.)		○		
20		Mitsubishi standard motor (SF-JR 4P 1.5 kW or lower)			○	
30		Vector control dedicated motor SF-V5RU (1500 r/min series) SF-THY			○	
40		Mitsubishi high-efficiency motor SF-HR		○		
50		Mitsubishi constant-torque motor SF-HRCA			○	
70		Mitsubishi high-performance energy-saving motor SF-PR			○	
330*1		IPM motor MM-CF				○
8090		IPM motor (other than MM-CF)			○	
9090		SPM motor			○	
3 and 4		Standard motor (such as SF-JR)	**Pr.82(Pr.455), Pr.859(Pr.860), Pr.90(Pr.458), Pr.91(Pr.459), Pr.92(Pr.460), Pr.93(Pr.461), Pr.94(Pr.462) and Pr.706(Pr.738)** • Internal data value 0 to 65534, 9999 (1) The display increment can be changed in **Pr.684**.	○		
13 and 14		Constant-torque motor (SF-JRCA, etc.) SF-V5RU (other than 1500 r/min series)			○	
23 and 24		Mitsubishi standard motor (SF-JR 4P 1.5 kW or lower)			○	
33 and 34		Vector control dedicated motor SF-V5RU (1500 r/min series) SF-THY			○	
43 and 44		Mitsubishi high-efficiency motor SF-HR		○		
53 and 54		Mitsubishi constant-torque motor SF-HRCA			○	
73 and 74		Mitsubishi high-performance energy-saving motor SF-PR			○	
333 and 334*1		IPM motor MM-CF				○
8093 and 8094		IPM motor (other than MM-CF)			○	
9093 and 9094		SPM motor			○	
5		Standard motor	Star connection: **Pr.82(Pr.455) and Pr.859(Pr.860)** • 0 to 500 A, 9999 (0.01 A)*2 • 0 to 3600 A, 9999 (0.1 A)*3 **Pr.90(Pr.458) and Pr.91(Pr.459)** • 0 to 50 Ω, 9999 (0.001 Ω)*2 • 0 to 400 mΩ, 9999 (0.01 mΩ)*3 **Pr.92(Pr.460) and Pr.93(Pr.461)** • 0 to 50 Ω, 9999 (0.001 Ω)*2 • 0 to 3600 mΩ, 9999 (0.1 mΩ)*3 **Pr.94(Pr.462)** • 0 to 500 Ω, 9999 (0.01 Ω)*2 • 0 to 100 Ω, 9999 (0.01 Ω)*3	○		
15		Constant-torque motor			○	
6		Standard motor	Delta connection	○		
16		Constant-torque motor			○	
—	9999 (initial value)	No second applied motor				

上正科技有限公司
購買、維修 此手冊零組件
電話: 037-466333
Email: service@repairtw.com
Line id: @zzzz
www.repairtw.com

(C) Motor constant parameters

*1 The setting is available for FR-A820-00630(11K) or lower.
*2 For the FR-A820-03160(55K) or lower and FR-A840-01800(55K) or lower.
*3 For the FR-A820-03800(75K) or higher and FR-A840-02160(75K) or higher.

REMARKS

- Regardless of the **Pr.71(Pr.450)** setting, offline auto tuning can be performed according to **Pr.96(Pr.463) Auto tuning setting/status**. (Refer to **page 428** for offlne auto tuning.)

(2) Using two types of motors (RT signal, Pr.450)

- When using two types of motors with one inverter, set **Pr.450 Second applied motor**.
- The setting value "9999" (initial value) disables second applied motor.
- If **Pr.450** ≠ 9999, the following parameters will be enabled by turning ON the Second function selection(RT) signal.

Function	RT signal ON (second motor)	RT signal OFF (first motor)
Electronic thermal O/L relay	**Pr.51**	**Pr.9**
Applied motor	**Pr.450**	**Pr.71**
Control method selection	**Pr.451**	**Pr.800**
Motor capacity	**Pr.453**	**Pr.80**
Number of motor poles	**Pr.454**	**Pr.81**
Motor excitation current	**Pr.455**	**Pr.82**
Rated motor voltage	**Pr.456**	**Pr.83**
Rated motor frequency	**Pr.457**	**Pr.84**
Motor constant (R1)	**Pr.458**	**Pr.90**
Motor constant (R2)	**Pr.459**	**Pr.91**
Motor constant (L1)/d-shaft inductance (Ld)	**Pr.460**	**Pr.92**
Motor constant (L2)/q-shaft inductance (Lq)	**Pr.461**	**Pr.93**
Motor constant (X)	**Pr.462**	**Pr.94**
Auto tuning setting/status	**Pr.463**	**Pr.96**
Frequency search gain	**Pr.560**	**P.r298**
Online auto tuning selection	**Pr.574**	**Pr.95**
Induced voltage constant (phi f)	**Pr.738**	**Pr.706**
Motor Ld decay ratio	**Pr.739**	**Pr.711**
Motor Lq decay ratio	**Pr.740**	**Pr.712**
Starting resistance tuning compensation	**Pr.741**	**Pr.717**
Starting magnetic pole position detection pulse width	**Pr.742**	**Pr.721**
Maximum motor frequency	**Pr.743**	**Pr.702**
Motor inertia (integer)	**Pr.744**	**Pr.707**
Motor inertia (exponent)	**Pr.745**	**Pr.724**
Motor protection current level	**Pr.746**	**Pr.725**
Torque current/Rated PM motor current	**Pr.860**	**Pr.859**

上正科技有限公司
購買、維修 此手冊零組件
電話：037-[illegible]33
Email: service@repairtw.com
Line Id: @zzz[illegible]
www.repairtw.com

REMARKS

- The RT signal is a second function selection signal. The RT signal also enables other second functions. (Refer to **page 420**.)
- The RT signal is assigned to the terminal RT in the initial status. Set "3" in any of **Pr.178 to Pr.189 (input terminal function selection)** to assign the RT signal to another terminal.
- Changing the terminal assignment using **Pr.178 to Pr.189 (input terminal function selection)** may affect the other functions. Set parameters after confirming the function of each terminal.

(3) Automatic change of Pr.0 Torque boost and Pr.12 DC injection brake operation voltage

- When initial values are set in **Pr.0** and **Pr.12**, the **Pr.0** and **Pr.12** settings are automatically changed to the values in the table below by changing the **Pr.71** setting.

Pr.	Pr.71 setting	Value (%) automatically changed by Pr.71															
		200 V class FR-A820-[]															
		00046 (0.4K)	00077K (0.75)	00105 (1.5K)	00167 (2.2K)	00250 (3.7K)	00340 (5.5K)	00490 (7.5K)	00630 (11K)	00770 (15K)	00930 (18.5K)	01250 (22K)	01540 (30K)	01870 (37K)	02330 (45K)	03160 (55K)	03800 (75K) or higher
		400 V class FR-A840-[]															
		00023 (0.4K)	00038 (0.75K)	00052 (1.5K)	00083 (2.2K)	00126 (3.7K)	00170 (5.5K)	00250 (7.5K)	00310 (11K)	00380 (15K)	00470 (18.5K)	00620 (22K)	00770 (30K)	00930 (37K)	01160 (45K)	01800 (55K)	02160 (75K) or higher
0	Standard*1	6	6	4	4	4	3	3	2	2	2	2	2	2	2/1.5*4	2/1.5*4	1
	Constant-torque*2	6	6	4	4	4	2	2	2	2	2	2	2	2	2/1.5*4	2/1.5*4	1
	SF-PR*3	3	3	3	2	2	1.5	1.5	1.5	1.5	1.5	1.5	1.5	1.5	1	1	1
12	Standard*1	4	4	4	4	4	4	4	2	2	2	2	2	2	2	2	1
	Constant-torque*2	4	4	4	4	4	2	2	2	2	2	2	2	2	2	2	1
	SF-PR*3	4	4	2.5	2.5	2.5	2	2	1.5	1.5	1.5	1	1	1	1	1	1

*1 When changed to **Pr.71** = "0, 2 to 8, 20, 23, 24, 40, 43, or 44" (standard motor)
*2 When changed to **Pr.71** = "1, 13 to 16, 50, 53, or 54" (constant-torque motor)
*3 When changed to **Pr.71** = "70, 73, or 74" (SF-PR)
*4 2% for the ND and HD ratings (**Pr.570** = "2 or 3"), and 1.5% for the SLD and LD ratings (**Pr.570** = "0 or 1")

REMARKS

- When the **Pr.0** and **Pr.12** settings are changed from their initial values, automatic change is not performed.

上正科技有限公司
購買、維修 此手冊零組件
電話：037-466333
Email: service@repairtw.com
Line id: @zzzz
www.repairtw.com

⚠ Caution

⚠ Make sure to set this parameter correctly according to the motor used. Incorrect setting may cause the motor and inverter to overheat and burn.

♦ Parameters referred to ♦

Pr.0 Torque boost ☞ page 577
Pr.12 DC injection brake operation voltage ☞ page 584
Pr.96 Auto tuning setting/status ☞ page 428
Pr.100 to Pr.109 (Adjustable 5 points V/F) ☞ page 583
Pr.178 to Pr.189 (input terminal function selection) ☞ page 416
Pr.684 Tuning data unit switchover ☞ page 428
Pr.800 Control method selection ☞ page 160

5.13.2 Offline auto tuning Magnetic flux Sensorless Vector

The offline auto tuning enables the optimal operation of an motor.

- What is offline auto tuning?
  Under Advanced magnetic flux vector control, real sensor vector control or vector control operation, measuring motor constants automatically (offline auto tuning) enables optimal operation of motors even when motor constants vary, when a motor of another company is used or when the wiring distance is long.

For the offline auto tuning for a PM motor, refer to page 438.

Pr.	Name	Initial value	Setting range	Description
684 C000	Tuning data unit switchover	0	0	Internal data converted value
			1	The value is indicated with "A, Ω, mH or %".
71 C100	Applied motor	0	0 to 6, 13 to 16, 20, 23, 24, 30, 33, 34, 40, 43, 44, 50, 53, 54, 70, 73, 74, 330, 333, 334, 8090, 8093, 8094, 9090, 9093, 9094	By selecting a motor, the thermal characteristic and motor constant of each motor are set.
80 C101	Motor capacity	9999	0.4 to 55 kW*2	Set the applied motor capacity.
			0 to 3600 kW*3	
			9999	V/F control
81 C102	Number of motor poles	9999	2, 4, 6, 8, 10, 12	Set the number of motor poles.
			9999	V/F control
9 C103	Electronic thermal O/L relay	Rated inverter current*1	0 to 500 A*2	Set the rated motor current.
			0 to 3600 A*3	
83 C104	Rated motor voltage	200/400 V*4	0 to 1000 V	Set the rated motor voltage (V).
84 C105	Rated motor frequency	9999	10 to 400 Hz	Set the rated motor frequency (Hz).
			9999	Use the value set in **Pr.3 Base frequency**.
707 C107	Motor inertia (integer)	9999	10 to 999, 9999	Set the motor inertia. 9999: Uses the constant value of Mitsubishi motor (SF-JR, SF-HR, SF-JRCA, SF-HRCA, SF-V5RU (1500 r/min series) and so on).
724 C108	Motor inertia (exponent)	9999	0 to 7, 9999	
96 C110	Auto tuning setting/ status	0	0	No offline auto tuning
			1	Performs offline auto tuning without rotating the motor
			11	Performs offline auto tuning without rotating the motor (V/f control, IPM motor MM-CF) (Refer to page 438)
			101	Performs offline auto tuning by rotating the motor
90 C120	Motor constant (R1)	9999	0 to 50 Ω, 9999*2 *5	Tuning data (The value measured by offline auto tuning is automatically set.) 9999: Uses the constant value of Mitsubishi motor (SF-JR, SF-HR, SF-JRCA, SF-HRCA, SF-V5RU (1500 r/min series) and so on).
			0 to 400 mΩ, 9999*3 *5	
91 C121	Motor constant (R2)	9999	0 to 50 Ω, 9999*2 *5	
			0 to 400 mΩ, 9999*3 *5	
92 C122	Motor constant (L1)/ d-shaft inductance (Ld)	9999	0 to 6000 mH, 9999*2 *5	
			0 to 400 mH, 9999*3 *5	
93 C123	Motor constant (L2)/ q-shaft inductance (Lq)	9999	0 to 6000 mH, 9999*2 *5	
			0 to 400 mH, 9999*3 *5	
94 C124	Motor constant (X)	9999	0 to 100%, 9999 *5	
82 C125	Motor excitation current	9999	0 to 500 A, 9999*2 *5	
			0 to 3600 A, 9999*3 *5	
859 C126	Torque current/Rated PM motor current	9999	0 to 500 A, 9999*2*5	
			0 to 3600 A, 9999*3*5	
298 A711	Frequency search gain	9999	0 to 32767	The offline auto tuning automatically sets the gain required for the frequency search.
			9999	Uses the constant value of Mitsubishi motor (SF-JR, SF-HR, SF-JRCA, SF-HRCA and so on).

上正科技有限公司
購買、維修 此手冊零組件
電話： 037-466333
Email: service@repairtw.com
Line id: @zzzz
www.repairtw.com

Pr.	Name	Initial value	Setting range	Description
450 C200	Second applied motor	9999	0, 1, 3 to 6, 13 to 16, 20, 23, 24, 30, 33, 34, 40, 43, 44, 50, 53, 54, 70, 73,74, 330, 333, 334, 8090, 8093, 8094, 9090, 9093, 9094	Set this parameter when using the second motor. (the same specifications as **Pr.71**).
			9999	The function is disabled.
453 C201	Second motor capacity	9999	0.4 to 55 kW*2	Set the capacity of the second motor.
			0 to 3600 kW*3	
			9999	V/F control
454 C202	Number of second motor poles	9999	2, 4, 6, 8, 10, 12	Set the number of poles of the second motor.
			9999	V/F control
51 C203	Second electronic thermal O/L relay	9999	0 to 500 A*2	This function is enabled when the RT signal is ON. Set the rated motor current.
			0 to 3600 A*3	
			9999	Second electronic thermal O/L relay disabled
456 C204	Rated second motor voltage	200/400 V*4	0 to 1000 V	Set the rated voltage (V) of the second motor.
457 C205	Rated second motor frequency	9999	10 to 400 Hz	Set the rated frequency (Hz) of the second motor.
			9999	Use the **Pr.84 Rated motor frequency** setting.
744 C207	Second motor inertia (integer)	9999	10 to 999, 9999	Set the inertia of the second motor. 9999: Uses the constant value of Mitsubishi motor (SF-JR, SF-HR, SF-JRCA, SF-HRCA, SF-V5RU (1500 r/min series) and so on).
745 C208	Second motor inertia (exponent)	9999	10 to 7, 9999	
463 C210	Second motor auto tuning setting/status	0	0	No auto tuning for the second motor.
			1	Performs offline auto tuning without rotating the second motor
			11	Performs offline auto tuning without rotating the motor (V/f control, IPM motor MM-CF) (Refer to page 438)
			101	Performs offline auto tuning by rotating the second motor
458 C220	Second motor constant (R1)	9999	0 to 50 Ω, 9999*2 *5	Tuning data of the second motor (The value measured by offline auto tuning is automatically set.) 9999: Uses the constant value of Mitsubishi motor (SF-JR, SF-HR, SF-JRCA, SF-HRCA and so on).
			0 to 400 mΩ, 9999*3 *5	
459 C221	Second motor constant (R2)	9999	0 to 50 Ω, 9999*2 *5	
			0 to 400 mΩ, 9999*3 *5	
460 C222	Second motor constant (L1) / d-shaft inductance (Ld)	9999	0 to 6000 mH, 9999*2 *5	
			0 to 400 mH, 9999*3 *5	
461 C223	Second motor constant (L2) / q-shaft inductance (Lq)	9999	0 to 6000 mH, 9999*2 *5	
			0 to 400 mH, 9999*3 *5	
462 C224	Second motor constant (X)	9999	0 to 100%, 9999 *5	
455 C225	Second motor excitation current	9999	0 to 500 A, 9999*2 *5	
			0 to 3600 A, 9999*3 *5	
860 C226	Second motor torque current/Rated PM motor current	9999	0 to 500 A, 9999*2 *5	
			0 to 3600 A, 9999*3 *5	
560 A712	Second frequency search gain	9999	0 to 32767	The offline auto tuning automatically sets the gain required for the frequency search of the second motor.
			9999	Uses the constant value of Mitsubishi motor (SF-JR, SF-HR, SF-JRCA, SF-HRCA and so on).

上正科技有限公司
購買、維修 此手冊零組件
電話： 037-466333
Email: service@repairtw.com
Line id: @2222
www.repairtw.com

*1 For FR-A820-00077(0.75K) or lower and FR-A840-00038(0.75K) or lower, it is set to 85% of the inverter rated current.
*2 For the FR-A820-03160(55K) or lower and FR-A840-01800(55K)or lower.
*3 For the FR-A820-03800(75K) or higher and FR-A840-02160(75K)or higher.
*4 Differs according to the voltage class. (200 V/400 V)
*5 The setting range and unit change according to the **Pr.71** (**Pr.450**) setting.

(C) Motor constant parameters

POINT

- The function is enabled under Advanced magnetic flux vector control, Real sensorless vector control, and vector control.
- Even if a motor other than Mitsubishi standard motors (SF-JR 0.4 kW or higher), high-efficiency motors (SF-HR 0.4 kW or higher), Mitsubishi constant-torque motors (SF-JRCA 4P, SF-HRCA 0.4 kW to 55 kW), Mitsubishi high-performance energy-serving motor (SF-PR), or vector control dedicated motors (SF-V5RU (1500 r/min series)), such as other manufacturers' induction motors, SF-JRC, SF-TH, etc., is used, or when the wiring length is long (approx. 30 m or longer), a motor can run with the optimum operation characteristics by using the offline auto tuning function.
- Tuning is enabled even when a load is connected to the motor.
- During offline auto tuning, the motor rotation can be locked (**Pr.96** = "1") or unlocked (**Pr.96** = "101"). The tuning is more accurate when the motor can rotate (unlocked).
- Reading/writing of the motor constants tuned by offline auto tuning are enabled. The offline auto tuning data (motor constants) can be copied to another inverter with the operation panel (FR-DU08).
- The offline auto tuning status can be monitored with the FR-DU08 and parameter unit (FR-PU07).

(1) Before performing offline auto tuning

Check the following points before performing offline auto tuning:

- A value other than "9999" is set in **Pr.80 and Pr.81**, and Advanced magnetic flux vector control, Real sensorless vector control or vector control is selected (with **Pr.800**).
- A motor is connected. (The motor should not be rotated by the force applied from outside during the tuning.)
- For the motor capacity, the rated motor current should be equal to or less than the rated inverter current. (It must be 0.4 kW or higher.) If a motor with substantially low rated current compared with the rated inverter current is used, speed and torque accuracies may deteriorate due to torque ripples, etc. Set the rated motor current to about 40% or higher of the rated inverter current.
- The target motor is other than a high-slip motor, a high-speed motor, or a special motor.
- The highest frequency is 400 Hz.
- The motor may rotate slightly even if the offline auto tuning without motor rotation (**Pr.96 Auto tuning setting/status** = "1") is selected. (The slight motor rotation does not affect the tuning performance.) Fix the motor securely with a mechanical brake, or before tuning, make sure that it is safe even if the motor rotates. (Caution is required especially in vertical lift applications.)
- Check the following points for the offline auto tuning with motor rotation (**Pr.96 Auto tuning setting/status** = "101").
  Torque is not sufficient during tuning.
  The motor can be rotated up to the speed close to the rated speed.
  The mechanical brake is released.
- Offline auto tuning is not performed correctly when the surge voltage suppression filter (FR-ASF-H/FR-BMF-H) are inserted between the inverter and motor. Be sure to remove them before performing tuning.
- Make sure to connect the encoder to the motor without coaxial misalignment during vector control. Set the speed ratio to 1:1.

上正科技有限公司
購買、維修 此手冊零組件
電話： 037-466333
Email: service@repairtw.com
Line id: @zzzz
www.repairtw.com

(2) Setting

- To perform tuning, set the following parameters about the motor.

First motor Pr.	Second motor Pr.	Name	Initial value	Description
80	**453**	Motor capacity	9999 (V/F control)	Set the motor capacity (kW).
81	**454**	Number of motor poles	9999 (V/F control)	Set the number of motor poles (2 to 12).
800	**451**	Control method selection	20	Set this parameter when using vector control or Real sensorless vector control.
9	**51**	Electronic thermal O/L relay	Rated inverter current	Set the rated motor current (A).
83	**456**	Rated motor voltage	200 V/400 V*1	Set the rated motor voltage (V) printed on the motor's rating plate.*2
84	**457**	Rated motor frequency	9999	Set the rated motor frequency (Hz).*2 When the setting is "9999", the **Pr.3 Base frequency** setting is used.
71	**450**	Applied motor	0 (standard motor)	Set this parameter according to the motor.*3 Three types of motor constant setting ranges, units and tuning data can be stored according to settings.
96	**463**	Auto tuning setting/ status	0	Set "1" or "101". 1: Performs tuning without rotating the motor. (Excitation noise occurs at this point.) 101: Performs tuning without rotating the motor. The motor can rotate up to the speed near the rated motor frequency.

*1 Differs according to the voltage class. (200 V/400 V)

*2 For the settings for the SF-V5RU refer to page 68.

*3 According to the **Pr.71** setting, the range of the motor constant parameter setting values and units can be changed. Set the **Pr.71** Applied motor setting according to the motor to be used and the motor constant setting range. (For other setting values of **Pr.71**, refer to page 424.)

上正科技有限公司
購買、維修 此手冊零組件
電話： 037-466333
Email: service@repairtw.com
Line id: @zzzz
www.repairtw.com

Motor		Pr.71 setting		
		Motor constant parameter mH, % and A unit setting	**Motor constant parameter Internal data setting**	**Motor constant parameter Ω, mΩ and A unit setting**
Mitsubishi standard motor Mitsubishi high-efficiency motor	SF-JR and SF-TH	0 (initial value)	3 (4)	—
	SF-JR 4P 1.5 kW or lower	20	23 (24)	—
	SF-HR	40	43 (44)	—
	Others	0 (initial value)	3 (4)	—
Mitsubishi constant-torque motor	SF-JRCA 4P and SF-TH (constant-torque)	1	13 (14)	—
	SF-HRCA	50	53 (54)	—
	Other (SF-JRC, etc.)	1	13 (14)	—
Mitsubishi high-performance energy-saving motor	SF-PR	70	73(74)	—
Vector control dedicated motor	SF-V5RU (1500 r/min series) SF-THY	30	33 (34)	—
	SF-V5RU (other than the 1500 r/min series)	1	13 (14)	—
Other manufacturer's standard motor	—	0 (initial value)	3 (4)	5 (star connection motor) 6 (delta connection motor)
Other manufacturer's constant-torque motor	—	1	13 (14)	15 (star connection motor) 16 (delta connection motor)

REMARKS

- If the SF-V5RU (other than the 1500 r/min series) is used, be sure to perform auto tuning after setting "1, 13, or 14" in **Pr.71** and setting **Pr.83** and **Pr.84**.
- If **Pr.11 DC injection brake operation time** = "0" or **Pr.12 DC injection brake operation voltage** = "0", offline auto tuning is performed considering **Pr.11 or Pr.12** is set to the initial value.
- If position control is selected (**Pr.800** = "3 or 5" (when the MC signal is OFF)), offline auto tuning is not performed.
- If "star connection" or "delta connection" is incorrectly selected in **Pr.71**, Advanced magnetic flux vector control, Real sensorless vector control and vector control are not performed normally.

(C) Motor constant parameters

- For tuning accuracy improvement, set the following parameters when the motor constants are known in advance.

First motor Pr.	Second motor Pr.	Name	Mitsubishi motor (SF-JR, SF-HR, SF-JRCA, SF-HRCA, SF-V5RU)	Other motors
707	**744**	Motor inertia (integer)	9999 (initial value)	Motor inertia*1 Jm=**Pr.707** × 10^(- **Pr.724**) (kg/m^2)
724	**745**	Motor inertia (exponent)		

*1 The setting is valid only when a value other than "9999" is set in both **Pr.702** (**Pr.744**) and **Pr.724** (**Pr.745**).

(3) Performing tuning

POINT

- Before performing tuning, check the monitor display of the operation panel (FR-DU08) or parameter unit (FR-PU07) if the inverter is in the state ready for tuning. (Refer to 2) below.) Turning ON the start command while tuning is unavailable starts the motor.

- In the PU operation mode, press FWD / REV on the operation panel.
  For External operation, turn ON the start command (STF signal or STR signal). Tuning will start.

REMARKS

- Satisfy the required inverter start conditions to start offline auto tuning. For example, stop the input of MRS signal.
- To force tuning to end, use the MRS or RES signal or press [STOP RESET] on the operation panel.
  (Turning the start signal (STF signal or STR signal) OFF also ends tuning.)
- During offline auto tuning, only the following I/O signals are valid. (initial value)
- Input terminals <effective signals>: STOP, OH, MRS, RT, RES, STF, STR, S1 and S2
- Output terminals: RUN, OL, IPF, FM/CA, AM, A1B1C1 and SO
- Note that the progress status of offline auto tuning is output in fifteen steps from AM and FM when speed and output frequency are selected.
- Do not perform ON/OFF switching of the Second function selection(RT) signal during offline auto tuning. Auto tuning will not be performed properly.
- Setting offline auto tuning (**Pr.96 Auto tuning setting/status** = "1 or 101") will make pre-excitation invalid.
- When the offline auto tuning is selected (**Pr.96 Auto tuning setting/status** = "101"), the motor rotates. Take caution and ensure the safety.
- Since the Inverter running (RUN) signal turns ON when tuning is started, pay close attention especially when a sequence which releases a mechanical brake by the RUN signal has been designed.
- When executing offline auto tuning, input the run command after switching ON the main circuit power (R/L1, S/L2, T/L3) of the inverter.
- While **Pr.79 Operation mode selection** = "7", turn the PU operation external interlock (X12) signal ON to tune in the PU operation mode.

上正科技有限公司
購買、維修 此手冊零組件
電話： 037-466333
Email: service@repairtw.com
Line id: @2222
www.repairtw.com

- Monitor is displayed on the operation panel (FR-DU08) and parameter unit (FR-PU07) during tuning as below.

Pr.96 setting value	1	101	1	101
	Parameter unit (FR-PU07) display		**Operation panel (FR-DU08) display**	
(1) Setting	READ:List 1 --- STOP PU	READ:List 101 --- STOP PU	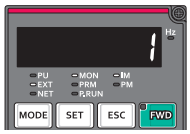	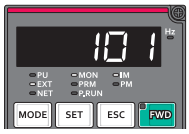
(2) During tuning	TUNE 2 STF FWD PU	TUNE 102 STF FWD PU	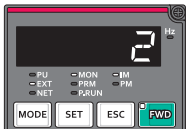	
(3) Normal completion	TUNE 3 COMPLETION STF STOP PU	TUNE 103 COMPLETION STF STOP PU	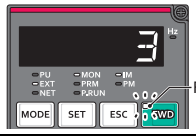 Flickering	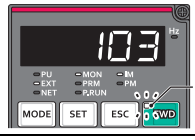 Flickering
(4) Forced end	TUNE ERROR 8 --- STOP PU		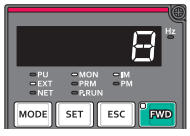	

- Note: Offline auto tuning time (with the initial setting)

Offline auto tuning setting	Time
No motor rotation (**Pr96** = "1")	Approx. 25 to 120 s (The time depends on the inverter capacity and motor type.)
With motor rotation (**Pr96** = "101")	Approx. 40 s (The following offline auto tuning time is set according to the acceleration/deceleration time setting. Offline auto tuning time = acceleration time + deceleration time + approx. 30 s)

- When offline auto tuning ends, press STOP RESET on the operation panel during PU operation. For External operation, turn OFF the start signal (STF signal or STR signal).
  This operation resets the offline auto tuning, and the PU's monitor display returns to the normal indication.
  (Without this operation, next operation cannot be started.)

REMARKS

- The motor constants measured once in the offline auto tuning are stored as parameters and their data are held until the offline auto tuning is performed again. However, the tuning data is cleared by performing all parameter clear.
- Changing **Pr.71** (**Pr.450**) after tuning completion will change the motor constant. For example, if **Pr.71** = "3" is set after tuning is performed with **Pr.71** = "0", the tuning data becomes invalid. Set **Pr.71** = "0" again for using the tuning data.

- If offline auto tuning has ended in error (see the table below), motor constants are not set. Perform an inverter reset and restart tuning.

Error display	Error cause	Countermeasures
8	Forced end	Set **Pr.96** = "1" or "101" and try again.
9	Inverter protective function operation	Make the setting again.
91	The current limit (stall prevention) function is activated.	Set the acceleration/deceleration time longer. Set **Pr.156** = "1".
92	The converter output voltage has dropped to 75% of the rated voltage.	Check for the power supply voltage fluctuation. Check the **Pr.84 Rated motor frequency** setting.
93	Calculation error The motor is not connected.	Check the **Pr.83** and **Pr.84** settings. Check the motor wiring and make the setting again.
94	Rotation tuning frequency setting error (The frequency command for the tuning was given to exceed the maximum frequency setting, or to be in the frequency jump range.)	Check the **Pr.1 Maximum frequency** and **Pr.31** to **Pr.36** Frequency jump settings.

上正科技有限公司
購買、維修 此手冊零組件
電話： 037-466333
Email: service@repairtw.com
Line id: @222
www.repairtw.com

- When tuning is ended forcibly by pressing STOP RESET or turning OFF the start signal (STF or STR) during tuning, offline auto tuning does not end properly. (The motor constants have not been set.)
  Perform an inverter reset and restart tuning.

- If using a motor falling under the following conditions, set the value of **Pr.9 Electronic thermal O/L relay** as shown below after tuning is complete.
  a) If the rated power supply of the motor is 200/220 V(400/440 V) 60 Hz, set the rated motor current multiplied by 1.1 in **Pr.9**.
  b) If using a motor with a temperature detector such as PTC thermistor and Klixon and performs motor overheat protection, set **Pr.9** = "0" (disables the motor overheat protection feature of the inverter).

REMARKS

- An instantaneous power failure occurring during tuning will result in a tuning error. After power is restored, the inverter starts normal operation. Therefore, when STF (STR) signal is ON, the motor runs in the forward (reverse) rotation.
- Any alarm occurring during tuning is handled as in the normal operation. Note that even if a retry operation has been set, retry is not performed.
- The set frequency monitor displayed during the offline auto tuning is 0 Hz

⚠ Caution

⚠ **Note that the motor may start running suddenly.**

⚠ **For the offline auto tuning in vertical lift applications, etc., caution is required to avoid falling due to insufficient torque.**

(C) Motor constant parameters

(4) Changing the motor constants

- If the motor constants are known, the motor constants can be set directly or set using data measured through offline auto tuning.
- According to the **Pr.71 (Pr.450)** setting, the range of the motor constant parameter setting values and units can be changed. The setting values are stored in the EEPROM as motor constant parameters, and three types of motor constants can be stored.

(5) Changing the motor constants (If setting the Pr.92 and Pr.93 motor constants in units of mH)

- Set **Pr.71** as shown below.

Motor		Pr.71 setting
Mitsubishi standard motor Mitsubishi high-efficiency motor	SF-JR	0 (initial value)
	SF-JR 4P 1.5 kW or lower	20
	SF-HR	40
Mitsubishi constant-torque motor	SF-JRCA 4P	1
	SF-HRCA	50
Mitsubishi high-performance energy-saving motor	SF-PR	70
Vector control dedicated motor	SF-V5RU (1500 r/min series)	30
	SF-V5RU (other than the 1500 r/min series)	1

- Use the following formula to find the **Pr.94** setting value and set a given value as the motor constant parameter.

$$\text{The setting value of Pr.94} = \left(1 - \frac{M^2}{L1 \times L2}\right) \times 100(\%)$$

上正科技有限公司
購買、維修 此手冊零組件
電話: 037-466333
Email: service@repairtw.com
Line id: @zzzz
www.repairtw.com

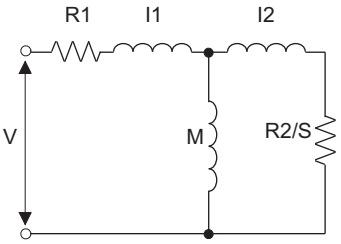

R1: Primary resistance
R2: Secondary resistance
I1: Primary leakage inductance
I2: Secondary leakage inductance
M: Excitation inductance
S: Slip

L1= I1+ M: Primary inductance
L2= I2+ M: Secondary inductance

Equivalent circuit diagram of the motor

First motor Pr.	Second motor Pr.	Name	Setting range	Setting increments	Initial value
82	455	Motor excitation current (No-load current)	0 to 500 A, 9999*1	0.01 A*1	9999
			0 to 3600 A, 9999*2	0.1 A*2	
90	458	Motor constant (R1)	0 to 50 Ω, 9999*1	0.001 Ω*1	
			0 to 400 mΩ, 9999*2	0.01 mΩ*2	
91	459	Motor constant (R2)	0 to 50 Ω, 9999*1	0.001 Ω*1	
			0 to 400 mΩ, 9999*2	0.01 mΩ*2	
92	460	Motor constant (L1)/d-shaft inductance (Ld)	0 to 6000 mH, 9999*1	0.1 mH*1	
			0 to 400 mH, 9999*2	0.01 mH*2	
93	461	Motor constant (L2)/q-shaft inductance (Lq)	0 to 6000 mH, 9999*1	0.1 mH*1	
			0 to 400 mH, 9999*2	0.01 mH*2	
94	462	Motor constant (X)	0 to 100%, 9999	0.1%*1	
				0.01%*2	
859	860	Torque current/Rated PM motor current	0 to 500 A, 9999*1	0.01A*1	
			0 to 3600 A, 9999*2	0.1 A*2	
298	560	Frequency search gain	0 to 32767, 9999	1	

*1 For the FR-A820-03160(55K) or lower and FR-A840-01800(55K) or lower.
*2 For the FR-A820-03800(75K) or higher and FR-A840-02160(75K) or higher.

REMARKS

- If "9999" is set, tuning data will be invalid and the constant values for Mitsubishi motors (SF-JR, SF-HR, SF-JRCA, SF-HRCA and SF-V5RU (1500 r/min series) and so on) are used.

(6) Changing the motor constants (If setting motor constants in the internal data of the inverter)

- Set **Pr.71** as follows.

Motor		Pr.71 setting
Mitsubishi standard motor Mitsubishi high-efficiency motor	SF-JR and SF-TH	3 (4)
	SF-JR 4P 1.5 kW or lower	23 (24)
	SF-HR	43 (44)
	Others	3 (4)
Mitsubishi constant-torque motor	SF-JRCA 4P SF-TH (constant-torque)	13 (14)
	SF-HRCA	53 (54)
	Other (SF-JRC, etc.)	13 (14)
Mitsubishi high-performance energy-saving motor	SF-PR	73(74)
Vector control dedicated motor	SF-V5RU (1500 r/min series) SF-THY	33 (34)
	SF-V5RU (other than the 1500 r/min series)	13 (14)
Other manufacturer's standard motor	—	3 (4)
Other manufacturer's constant-torque motor	—	13 (14)

- Set given values as the motor constant parameters. The displayed increments of the read motor constants can be changed with **Pr.684 Tuning data unit switchover**.

First motor Pr.	Second motor Pr.	Name	Pr.684 = 0 (initial value)		Pr.684 = 1		Initial value
			Setting range	Setting increments	Range indication	Unit indication	
82	455	Motor excitation current	0 to ***, 9999	1	0 to 500 A, 9999*1	0.01 A*1	9999
					0 to 3600 A, 9999*2	0.1 A*2	
90	458	Motor constant (R1)			0 to 50 Ω, 9999*1	0.001 Ω*1	
					0 to 400 mΩ, 9999*2	0.01 mΩ*2	
91	459	Motor constant (R2)			0 to 50 Ω, 9999*1	0.001 Ω*1	
					0 to 400 mΩ, 9999*2	0.01 mΩ*2	
92	460	Motor constant (L1)/d-shaft inductance (Ld)			0 to 6000 mH, 9999*1	0.1 mH*1	
					0 to 400 mH, 9999*2	0.01 mH*2	
93	461	Motor constant (L2)/q-shaft inductance (Lq)			0 to 6000 mH, 9999*1	0.1 mH*1	
					0 to 400 mH, 9999*2	0.01 mH*2	
94	462	Motor constant (X)			0 to 100%, 9999	0.1%*1	
						0.01%*2	
859	860	Torque current/Rated PM motor current			0 to 500 A, 9999*1	0.01 A*1	
					0 to 3600 A, 9999*2	0.1 A*2	
298	560	Frequency search gain	0 to 32767, 9999	1	0 to 32767, 9999	1	

上正科技有限公司
購買、維修 此手冊零組件
電話： 037-466333
Email: service@repairtw.com
Line id: @zzzz
www.repairtw.com

*1 For the FR-A820-03160(55K) lower and FR-A840-01800(55K) or lower.
*2 For the FR-A820-03800(75K) or higher and FR-A840-02160(75K) or higher.

REMARKS

- As the motor constants measured in the offline auto tuning have been converted into internal data (****), refer to the following setting example when making setting:
- Setting example: To slightly increase the **Pr.90** value (5%)
  If **Pr.90** = "2516" is displayed,
  the value is calculated with 2516 × 1.05 = 2641.8. Therefore set **Pr.90** = "2642".
  (The value displayed has been converted into a value for internal use. Hence, simple addition of a given value to the displayed value has no significance.)
- If "9999" is set, tuning data will be invalid and the constant values for Mitsubishi motors (SF-JR, SF-HR, SF-JRCA, SF-HRCA and SF-V5RU (1500 r/min series) and so on) are used.

(C) Motor constant parameters

(7) Changing the motor constants (If setting the Pr.92 and Pr.93 motor constants in units of [Ω])

- Set **Pr.71** as shown below.

Applicable motor	Pr.71 setting	
	Star connection motor	Delta connection motor
Standard motor	5	6
Constant-torque motor	15	16

- Set given values as the motor constant parameters.

Iq = torque current, I_{100} = rated current, I_0 = no load current

$$Iq = \sqrt{I_{100}^2 - I_0^2}$$

First motor Pr.	Second motor Pr.	Name	Setting range	Setting increments	Initial value
82	455	Motor excitation current (No-load current)	0 to 500 A, 9999*1	0.01 A*1	9999
			0 to 3600 A, 9999*2	0.1 A*2	
90	458	Motor constant (r1)	0 to 50 Ω, 9999*1	0.001 Ω*1	
			0 to 400 mΩ, 9999*2	0.01 mΩ*2	
91	459	Motor constant (r2)	0 to 50 Ω, 9999*1	0.001 Ω*1	
			0 to 400 mΩ, 9999*2	0.01 mΩ*2	
92	460	Motor constant (×1)	0 to 50 Ω, 9999*1	0.001 Ω*1	
			0 to 3600 mΩ, 9999*2	0.01 mΩ*2	
93	461	Motor constant (×2)	0 to 50 Ω, 9999*1	0.001 Ω*1	
			0 to 3600 mΩ, 9999*2	0.01 mΩ*2	
94	462	Motor constant (×m)	0 to 500 Ω, 9999*1	0.01 Ω	
			0 to 100 Ω, 9999*2		
859	860	Torque current/Rated PM motor current	0 to 500 A, 9999*1	0.01 A*1	
			0 to 3600 A, 9999*2	0.1 A*2	
298	560	Frequency search gain	0 to 32767, 9999	1	

*1 For the FR-A820-03160(55K) or lower and FR-A840-01800(55K) or lower.

*2 For the FR-A820-03800(75K) or higher and FR-A840-02160(75K) or higher.

工正科技有限公司
購買、維修 此工业零组件
電話： 037-466333
Email: service@repairtw.com
Line id: @zzzz
www.repairtw.com

REMARKS

- If "star connection" or "delta connection" is incorrectly selected in **Pr.71**, Advanced magnetic flux vector control, Real sensorless vector control and vector control are not performed normally.
- If "9999" is set, tuning data will be invalid and the constant values for Mitsubishi motors (SF-JR, SF-HR, SF-JRCA, SF-HRCA and SF-V5RU (1500 r/min series) and so on) are used.

(8) Tuning the second applied motor

- When one inverter switches the operation between two different motors, set the second motor in **Pr.450 Second applied motor**. (Refer to page 424.) In the initial setting, no second motor is applied.
- Turning ON the RT signal will enable the parameter settings for the second motor as shown below.

Function	RT signal ON (second motor)	RT signal OFF (first motor)
Motor capacity	**Pr.453**	**Pr.80**
Number of motor poles	**Pr.454**	**Pr.81**
Motor excitation current	**Pr.455**	**Pr.82**
Rated motor voltage	**Pr.456**	**Pr.83**
Rated motor frequency	**Pr.457**	**Pr.84**
Motor constant (R1)	**Pr.458**	**Pr.90**
Motor constant (R2)	**Pr.459**	**Pr.91**
Motor constant (L1)/d-shaft inductance (Ld)	**Pr.460**	**Pr.92**
Motor constant (L2)/q-shaft inductance (Lq)	**Pr.461**	**Pr.93**
Motor constant (X)	**Pr.462**	**Pr.94**
Auto tuning setting/status	**Pr.463**	**Pr.96**
Frequency search gain	**Pr.560**	**Pr.298**

REMARKS

- The RT signal is assigned to the terminal RT in the initial status. Set "3" in any of **Pr.178 to Pr.189 (input terminal function selection)** to assign the RT signal to another terminal.
- Changing the terminal assignment using **Pr.178 to Pr.189 (input terminal function selection)** may affect the other functions. Set parameters after confirming the function of each terminal.

大千科技有限公司
購買、維修 此手冊零組件
電話： 037-466333
Email: service@repairtw.com
Line id: @zzzz
www.repairtw.com

♦ Parameters referred to ♦

Pr.1 Maximum frequency ☞
Pr.9 Electronic thermal O/L relay ☞ page 322
Pr.31 to Pr.36 Frequency jump ☞
Pr.71 Applied motor ☞ page 424
Pr.156 Stall prevention operation selection ☞ page 336
Pr.178 to Pr.189 (input terminal function selection) ☞ page 416
Pr.190 to Pr.196 (output terminal function selection) ☞ page 370
Pr.800 Control method selection ☞ page 160

5.13.3 Offline auto tuning for a PM motor (motor constants tuning) PM

The offline auto tuning for an PM motor enables the optimal operation of a PM motor.

- What is offline auto tuning?
  Under PM sensorless vector control, setting motor constants automatically (offline auto tuning) enables optimal operation of motors even when motor constants vary or when the wiring distance is long. IPM and SPM motors other than IPM motor MM-CF can also be used.

For the offline auto tuning under Advanced magnetic flux vector control, Real sensorless vector control, and vector control, refer to page 428.

Pr.	Name	Initial value	Setting range	Description
684 C000	Tuning data unit switchover	0	0	Internal data converted value
			1	The value is indicated with "A, Ω, mH or mV".
1002 C150	Lq tuning target current adjustment coefficient	9999	50 to 150%	Perform adjustment if the overcurrent protective function is activated during tuning.
			9999	No adjustment
71 C100	Applied motor	0	0 to 6, 13 to 16, 20, 23, 24, 30, 33, 34, 40, 43, 44, 50, 53, 54, 70, 73, 74, 330, 333, 334, 8090, 8093, 8094, 9090, 9093, 9094	By selecting a motor, the thermal characteristic and motor constant of each motor are set.
80 C101	Motor capacity	9999	0.4 to 55 kW*2	Applied motor capacity setting.
			0 to 3600 kW*3	
			9999	V/F control
81 C102	Number of motor poles	9999	2, 4, 6, 8, 10, 12	Set the number of motor poles.
			9999	V/F control
9 C103	Electronic thermal O/L relay	Rated inverter current*1	0 to 500 A*2	Set the rated motor current.
			0 to 3600 A*3	
83 C104	Rated motor voltage	200/400 V*4	0 to 1000 V	Set the rated motor voltage (V).
84 C105	Rated motor frequency	9999	10 to 400 Hz	Set the rated motor frequency (Hz).
			9999	The MM-CF constant is used when the IPM motor MM-CF is selected, and the inverter internal data is used when a PM motor other than MM-CF is selected. Use the correct setting according to the motor specification.
702 C106	Maximum motor frequency	9999	0 to 400 Hz	Set the maximum frequency of the motor.
			9999	The MM-CF motor maximum frequency is used when the IPM motor MM-CF is selected, and **Pr.84** setting is used when a PM motor other than MM-CF is selected.
707 C107	Motor inertia (integer)	9999	10 to 999, 9999	Set the motor inertia. 9999: Uses MM-CF inertia for IPM motor MM-CF.
724 C108	Motor inertia (exponent)	9999	0 to 7, 9999	
96 C110	Auto tuning setting/status	0	0, 101	No offline auto tuning.
			1	Performs offline auto tuning without rotating the motor. (motor other than IPM motor MM-CF)
			11	Performs offline auto tuning without rotating the motor (V/F control, IPM motor MM-CF).

上正科技有限公司
購買、維修 此零組件
電話：037-466333
Email: service@repairtw.com
Line Id: @zzzz
www.repairtw.com

Pr.	Name	Initial value	Setting range	Description
90 C120	Motor constant (R1)	9999	0 to 50 Ω, 9999*2*5	Tuning data (The value measured by offline auto tuning is automatically set.) 9999: Uses the MM-CF constant for the IPM motor MM-CF, and the inverter internal data for a PM motor other than MM-CF.
			0 to 400 mΩ, 9999*3*5	
92 C122	Motor constant (L1)/d-shaft inductance (Ld)	9999	0 to 500 mH, 9999*2*5	
			0 to 50 mH, 9999*3*5	
93 C123	Motor constant (L2)/q-shaft inductance (Lq)	9999	0 to 500 mH, 9999*2*5	
			0 to 50 mH, 9999*3*5	
859 C126	Torque current/Rated PM motor current	9999	0 to 500 A, 9999*2*5	
			0 to 3600 A, 9999*3*5	
706 C130	Induced voltage constant (phi f)	9999	0 to 5000 mV/(rad/s)*5	Set this parameter according to the PM motor specifications.
			9999	The value calculated by the motor constant parameter setting is used.
711 C131	Motor Ld decay ratio	9999	0 to 100%, 9999	Tuning data (The value measured by offline auto tuning is automatically set.) 9999: Uses the MM-CF constant for the IPM motor MM-CF, and the inverter internal data for a PM motor other than MM-CF.
712 C132	Motor Lq decay ratio	9999	0 to 100%, 9999	
717 C182	Starting resistance tuning compensation	9999	0 to 200%, 9999	
721 C185	Starting magnetic pole position detection pulse width	9999	0 to 6000 μs, 10000 to 16000 μs, 9999	
725 C133	Motor protection current level	9999	100 to 500%	Set the maximum current (OCT) level of the motor.
			9999	Uses the MM-CF constant for the IPM motor MM-CF, and 200% for a PM motor other than MM-CF.
450 C200	Second applied motor	9999	0, 1, 3 to 6, 13 to 16, 20, 23, 24, 30, 33, 34, 40, 43, 44, 50, 53, 54, 70, 73, 74, 330, 333, 334, 8090, 8093, 8094, 9090, 9093, 9094	Set this parameter when using the second motor. (the same specifications as **Pr.71**).
			9999	The function is disabled.
453 C201	Second motor capacity	9999	0.4 to 55 kW*2	Set the capacity of the second motor.
			0 to 3600 kW*3	
			9999	V/F control
454 C202	Number of second motor poles	9999	2, 4, 6, 8, 10, 12	Set the number of poles of the second motor.
			9999	V/F control
51 C203	Second electronic thermal O/L relay	9999	0 to 500 A*2	Set the rated current of the second motor.
			0 to 3600 A*3	
			9999	Second electronic thermal O/L relay disabled.
456 C204	Rated second motor voltage	200/400 V*4	0 to 1000 V	Set the rated voltage (V) of the second motor.
457 C205	Rated second motor frequency	9999	10 to 400 Hz	Set the rated frequency (Hz) of the second motor.
			9999	The MM-CF constant is used when the IPM motor MM-CF is selected for the second motor, and the inverter internal data is used when a PM motor other than MM-CF is selected. Use the correct setting according to the motor specification.
743 C206	Second motor maximum frequency	9999	0 to 400 Hz	Set the maximum frequency of the second motor.
			9999	The maximum frequency of an MM-CF motor when MM-CF is selected. The setting value of **Pr.457** is used for non-MM-CF motors.

上正科技有限公司
購買、維修 此手冊零組件
電話： 07-4663-93
Email: service@upchi.com
Line id: @zzzz
www.repairtw.com

(C) Motor constant parameters

Pr.	Name	Initial value	Setting range	Description
744 C207	**Second motor inertia (integer)**	9999	10 to 999, 9999	Set the inertia of the second motor. 9999: Uses MM-CF inertia for IPM motor MM-CF, and MM-EFS inertia for non-MM-CF motors.
745 C208	**Second motor inertia (exponent)**	9999	0 to 7, 9999	
463 C210	**Second motor auto tuning setting/status**	0	0, 101	No auto tuning for the second motor.
			1	Performs offline auto tuning without rotating the second motor. (motor other than the IPM motor MM-CF)
			11	Performs offline auto tuning without rotating the motor (for IPM motor MM-CF).
458 C220	**Second motor constant (R1)**	9999	0 to 50 Ω, 9999*2*5	Tuning data of the second motor (The value measured by offline auto tuning is automatically set.) 9999: Uses the MM-CF constant for the IPM motor MM-CF, and the inverter internal data for a PM motor other than MM-CF.
			0 to 400 mΩ, 9999*3*5	
460 C222	**Second motor constant (L1) / d-shaft inductance (Ld)**	9999	0 to 500 mH, 9999*2*5	
			0 to 50 mH, 9999*3*5	
461 C223	**Second motor constant (L2) / q-shaft inductance (Lq)**	9999	0 to 500 mH, 9999*2*5	
			0 to 50 mH, 9999*3*5	
860 C226	**Second motor torque current/Rated PM motor current**	9999	0 to 500 A, 9999*2*5	
			0 to 3600 A, 9999*3*5	
738 C230	**Second motor induced voltage constant (phi f)**	9999	0 to 5000 mV/(rad/s)*5	Set this parameter according to the PM motor specifications.
			9999	Value calculated based on the tuning data.
739 C231	**Second motor Ld decay ratio**	9999	0 to 100%, 9999	Tuning data of the second motor. (The value measured by offline auto 9999: Uses the MM-CF constant for the IPM motor MM-CF, and the inverter internal data for a PM motor other than MM-CF.
740 C232	**Second motor Lq decay ratio**	9999	0 to 100%, 9999	
741 C282	**Second starting resistance tuning compensation**	9999	0 to 200%, 9999	
742 C285	**Second motor magnetic pole detection pulse width**	9999	0 to 6000 μs, 10000 to 16000 μs, 9999	
746 C233	**Second motor protection current level**	9999	100 to 500%	Set the maximum current (OCT) level of the second motor.
			9999	Uses the MM-CF constant for the IPM motor MM-CF, and 200% for a PM motor other than MM-CF.

上正科技有限公司
購買、維修 此手冊零組件
電話： 037-466333
Email: service@repairtw.com
Line id: @2222
www.repairtw.com

*1 For FR-A820-00077(0.75K) or lower and FR-A840-00038(0.75K) or lower, it is set to 85% of the inverter rated current.

*2 For the FR-A820-03160(55K) or lower and FR-A840-01800(55K) or lower.

*3 For the FR-A820-03800(75K) or higher and FR-A840-02160(75K) or higher.

*4 Differs according to the voltage class. (200 V/400 V)

*5 The setting range and unit change according to the **Pr.71** (**Pr.450**) setting.

POINT

- The settings are valid under the PM sensorless vector control.
- The offline auto tuning enables the operation with SPM motors and IPM motors other than MM-CF. (When a PM motor other than the IPM motor MM-CF is used, always perform the offline auto tuning.)
- Tuning is enabled even when a load is connected to the motor.
- Reading/writing of the motor constants tuned by offline auto tuning are enabled. The offline auto tuning data (motor constants) can be copied to another inverter with the operation panel (FR-PU08).
- The offline auto tuning status can be monitored with the FR-DU08 and parameter unit (FR-PU07).

(1) Before performing offline auto tuning

Check the following points before performing offline auto tuning.

- The PM sensorless vector control is selected.
- A motor is connected. Note that the motor should be at a stop at a tuning start. (The motor should not be rotated by the force applied from outside during the tuning.)
- For the motor capacity, the rated motor current should be equal to or less than the rated inverter current. (It must be 0.4 kW or higher.) If a motor with substantially low rated current compared with the rated inverter current is used, speed and torque accuracies may deteriorate due to torque ripples, etc. Set the rated motor current to about 40% or higher of the rated inverter current.
- The maximum frequency under PM sensorless vector control is 400 Hz.
- The motor may rotate slightly even if the offline auto tuning without motor rotation (**Pr.96 Auto tuning setting/status** = "1 or 11") is selected. (It does not affect the tuning performance.) Fix the motor securely with a mechanical brake, or before tuning, make sure that it is safe even if the motor rotates. (Caution is required especially in vertical lift applications.)
- Offline auto tuning is not performed correctly when the surge voltage suppression filter (FR-ASF-H/FR-BMF-H) are inserted between the inverter and motor. Be sure to remove them before performing tuning.
- Tuning is not available during position control under PM sensorless vector control.

(2) Setting

- To perform tuning, set the following parameters about the motor.

First motor Pr.	Second motor Pr.	Name	Setting for a PM motor other than MM-CF	Setting for MM-CF
80	**453**	Motor capacity	Motor capacity (kW)	Set by the IPM parameter initialization (Refer to page 170.)
81	**454**	Number of motor poles	The number of motor poles (2 to 12)	
9	**51**	Electronic thermal O/L relay	Rated motor current (A)	
84	**457**	Rated motor frequency	Rated motor frequency (Hz)	
83	**456**	Rated motor voltage	Rated motor voltage (V)	Rated motor voltage (V) written on the rated plate
71	**450**	Applied motor	8090, 8093 (IPM motor) 9090, 9093 (SPM motor)*1	330 and 333*1
96	**463**	Auto tuning setting/status	1	11

上正科技有限公司
購買、維修 此手冊零組件
電話： 037-466333
Email: service@repairtw.com
Line id: @zzzz
www.repairtw.com

*1 Set **Pr.71 Applied motor** according to the motor to be used. According to the **Pr.71** setting, the range of the motor constant parameter setting values and units can be changed. (For other setting values of **Pr.71**, refer to page 424.)

Motor		Pr.71 setting	
		Motor constant parameter Ω, mH and A unit setting	Motor constant parameter Internal data setting
IPM motor	MM-CF	330	333 (334)
	Other than MM-CF	8090	8093 (8094)
SPM motor		9090	9093 (9094)

REMARKS

- If PM sensorless vector control is performed, tuning cannot be performed even when **Pr.96** = "101" is set. If MM-CF is set to the applied motor, tuning cannot be performed even when **Pr.96** = "1, 101" is set.

- For the tuning accuracy improvement, set the following parameter when the motor constant is known in advance.

First motor Pr.	Second motor Pr.	Name	Setting for a PM motor other than MM-CF	Setting for MM-CF
702	**743**	Maximum motor frequency	The maximum motor frequency (Hz)	9999 (initial value)
707	**744**	Motor inertia (integer)	Motor inertia*1 Jm=**Pr.707** × 10^(- **Pr.724**) (kg/m^2)	9999 (initial value)
724	**745**	Motor inertia (exponent)		
725	**746**	Motor protection current level	Maximum current level of the motor (%)	9999 (initial value)

*1 The setting is valid only when both of the **Pr.702** (**Pr.744**) and **Pr.724** (**Pr.745**) settings are other than "9999".

(C) Motor constant parameters

(3) Performing tuning

POINT

- Before performing tuning, check the monitor display of the operation panel (FR-DU08) or parameter unit (FR-PU07) if the inverter is in the state ready for tuning. Turning ON the start command while tuning is unavailable starts the motor.

- In the PU operation mode, press FWD / REV on the operation panel.

  For External operation, turn ON the start command (STF signal or STR signal). Tuning will start.

REMARKS

- Satisfy the required inverter start conditions to start offline auto tuning. For example, stop the input of MRS signal.
- To force tuning to end, use the MRS or RES signal or press [STOP RESET] on the operation panel. (Turning the start signal (STF signal or STR signal) OFF also ends tuning.)
- During offline auto tuning, only the following I/O signals are valid (initial value)
- Input terminals <effective signals>: STOP, OH, MRS, RT, RES, STF, STR, S1 and S2
- Output terminals: RUN, OL, IPF, FM/CA, AM, A1B1C1 and SO
- Note that the progress status of offline auto tuning is output in fifteen steps from AM, FM and CA when speed and output frequency are selected.
- Do not perform ON/OFF switching of the Second function selection(RT) signal during offline auto tuning. Auto tuning will not be performed properly.
- Setting offline auto tuning (**Pr.96** = "1 or 11") will make pre-excitation invalid.
- A motor with 14 or more poles cannot be tuned.
- Since the Inverter running (RUN) signal turns ON when tuning is started, pay close attention especially when a sequence which releases a mechanical brake by the RUN signal has been designed.
- When executing offline auto tuning, input the run command after switching ON the main circuit power (R/L1, S/L2, T/L3) of the inverter.
- While **Pr.79 Operation mode selection** = "7", turn the PU operation external interlock (X12) signal ON to tune in the PU operation mode.

上虎科技有限公司
購買、維修 此手冊零組件
電話： 037-466333
Email: service@repair.tw.com
Line Id: @zzzz
www.repair.tw.com

- Monitor is displayed on the operation panel (FR-DU08) and parameter unit (FR-PU07) during tuning as below.

Pr.96 (Pr.463) Setting	1	11	1	11
	Parameter unit (FR-PU07) display		**Operation panel (FR-DU08) display**	
(1) Setting	READ:List 1 --- STOP PU	READ:List 11 --- STOP PU	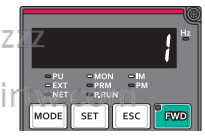	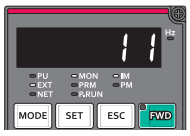
(2) During tuning	TUNE 2 STF FWD PU	TUNE 12 STF FWD PU	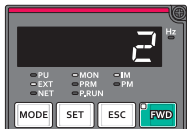	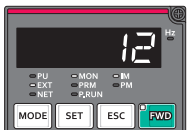
(3) Normal completion	TUNE 3 COMPLETION STF STOP PU	TUNE 13 COMPETION STF STOP PU	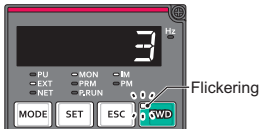 Flickering	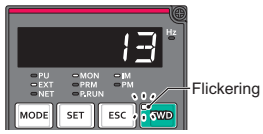 Flickering
(4) Forced end	TUNE ERROR 8 --- STOP PU		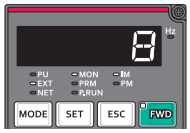	

- When offline auto tuning ends, press STOP RESET on the operation panel during PU operation. For External operation, turn OFF the start signal (STF signal or STR signal).

This operation resets the offline auto tuning, and the PU's monitor display returns to the normal indication.
(Without this operation, next operation cannot be started.)

REMARKS

- The motor constants measured once in the offline auto tuning are stored as parameters and their data are held until the offline auto tuning is performed again. However, the tuning data is cleared by performing all parameter clear.
- Changing **Pr.71** after tuning completion will change the motor constant. For example, if **Pr.71** = "8093" is set after tuning is performed with **Pr.71** ="8090", the tuning data becomes invalid. Set **Pr.71** = "8090" again for using the tuning data.

- If offline auto tuning has ended in error (see the table below), motor constants are not set.
  Perform an inverter reset and restart tuning.

Error display	Error cause	Countermeasures
8	Forced end	Set **Pr.96 (Pr.463)** = "1" or "11" and try again.
9	Inverter protective function operation	Make the setting again.
92	The converter output voltage has dropped to 75% of the rated voltage.	Check for the power supply voltage fluctuation. Check the **Pr.84 Rated motor frequency** setting.
93	Calculation error. The motor is not connected.	Check the motor wiring and make the setting again.
94	Rotation tuning frequency setting error (The frequency command for the tuning was given to exceed the maximum frequency setting, or to be in the frequency jump range.)	Check the **Pr.1 Maximum frequency** and **Pr.31** to **Pr.36** Frequency jump settings.

- When tuning is ended forcibly by pressing STOP RESET or turning OFF the start signal (STF or STR) during tuning, offline auto tuning does not end properly. (The motor constants have not been set.)
  Perform an inverter reset and restart tuning.

REMARKS

- An instantaneous power failure occurring during tuning will result in a tuning error.
  After power is restored, the inverter starts normal operation. Therefore, when STF (STR) signal is ON, the motor runs in the forward (reverse) rotation.
- Any alarm occurring during tuning is handled as in the normal operation. However, if the retry function is set, no retry is performed even when a protective function that performs a retry is activated.
- The set frequency monitor displayed during the offline auto tuning is 0 Hz.

上正科技有限公司
購買、維修 此手冊零組件
電話： 037-466333
Email: service@repairtw.com
Line id: @zzzz
www.repairtw.com

Caution

Note that the motor may start running suddenly.

(4) Parameters in which tuning results are set after tuning

First motor Pr.	Second motor Pr.	Name	Other than MM-CF Pr.96 (Pr.463) = 1	V/F control or MM-CF Pr.96 (Pr.463) = 11	Description
90	458	Motor constant (R1)	○	○	Resistance per phase
92	460	Motor constant (L1)/d-shaft inductance (Ld)	○	—	d-shaft inductance
93	461	Motor constant (L2)/q-shaft inductance (Lq)	○	—	q-shaft inductance
711	739	Motor Ld decay ratio	○	—	d-shaft inductance decay ratio
712	740	Motor Lq decay ratio	○	—	q-shaft inductance decay ratio
717	741	Starting resistance tuning compensation	○	○	
721	742	Starting magnetic pole position detection pulse width	○	—	When the setting value is 10000 or more: With polarity inversion for compensation, voltage pulse (Pr. setting minus 10000) μs
859	860	Torque current/Rated PM motor current	○	—	
96	463	Auto tuning setting/status	○	○	

(5) Tuning adjustment (Pr.1002)

- The overcurrent protective function may be activated during Lq tuning for an easily magnetically saturated motor (motor with a large Lg decay ratio). In such case, adjust the target flowing current used for tuning with **Pr.1002 Lq tuning target current adjustment coefficient**.

(C) Motor constant parameters

(6) Changing the motor constants

- If the motor constants are known, the motor constants can be set directly or set using data measured through offline auto tuning.
- According to the **Pr.71 (Pr.450)** setting, the range of the motor constant parameter setting values and units can be changed. The setting values are stored in the EEPROM as motor constant parameters, and two types of motor constants can be stored.

(7) Changing the motor constants (If setting motor constants in units of [Ω], [mH] or [A])

- Set **Pr.71** as shown below.

Motor		Pr.71 setting
IPM motor	MM-CF	330
	Other than MM-CF	8090
SPM motor		9090

- Set given values as the motor constant parameters.

First Pr.	Second Pr.	Name	Setting range	Setting increments	Initial value
90	458	Motor constant (R1)	0 to 50 Ω, 9999*1	0.001 Ω*1	9999
			0 to 400 mΩ, 9999*2	0.01 mΩ*2	
92	460	Motor constant (L1)/d-shaft inductance (Ld)	0 to 500 mH, 9999*1	0.01 mH*1	
			0 to 50 mH, 9999*2	0.001 mH*2	
93	461	Motor constant (L2)/q-shaft inductance (Lq)	0 to 500 mH, 9999*1	0.01 mH*1	
			0 to 50 mH, 9999*2	0.001 mH*2	
706	738	Induced voltage constant (phi f)	0 to 5000 mV/(rad/s), 9999	0.1 mV/(rad/s)	
859	860	Torque current/Rated PM motor current	0 to 500 A, 9999*1	0.01 A*1	
			0 to 3600 A, 9999*2	0.1 A*2	

*1 For the FR-A820-03160(55K) or lower and FR-A840-01800(55K)or lower.

*2 For the FR-A820-03800(75K) or higher and FR-A840-02160(75K)or higher.

購買、維修 此手冊教學
電話 037-466333
Email: service@repairtw.com
Line id: @zzzz
www.repairtw.com

REMARKS

- Setting "9999" disables the tuning data. The MM-CF constant is used for the IPM motor MM-CF, and the inverter internal constant is used for a PM motor other than MM-CF.

(8) Changing the motor constants (If setting a motor constants in the internal data of the inverter)

- Set **Pr.71** as follows.

Motor		Pr.71 setting
IPM motor	MM-CF	333 (334)
	Other than MM-CF	8093 (8094)
SPM motor		9093 (9094)

- Set given values as the motor constant parameters. The displayed increments of the read motor constants can be changed with **Pr.684 Tuning data unit switchover**.

First motor Pr.	Second motor Pr.	Name	Pr.684 = 0 (initial value)		Pr.684 = 1		Initial value
			Setting range	Setting increments	Range indication	Unit indication	
90	458	Motor constant (R1)	0 to ***, 9999	1	0 to 50 Ω, 9999*1	0.001 Ω*1	9999
					0 to 400 mΩ, 9999*2	0.01 mΩ*2	
92	460	Motor constant (L1)/d-shaft inductance (Ld)			0 to 500 mH, 9999*1	0.01 mH*1	
					0 to 50 mH, 9999*2	0.001 mH*2	
93	461	Motor constant (L2)/q-shaft inductance (Lq)			0 to 500 mH, 9999*1	0.01 mH*1	
					0 to 50 mH, 9999*2	0.001 mH*2	
706	738	Induced voltage constant (phi f)			0 to 5000 mV/s/rad, 9999	0.1 mV/(rad/s)	
859	860	Torque current/Rated PM motor current			0 to 500 A, 9999*1	0.01 A*1	
					0 to 3600 A, 9999*2	0.1 A*2	

*1 For the FR-A820-03160(55K) or lower and FR-A840-01800(55K) or lower.

*2 For the FR-A820-03800(75K) or higher and FR-A840-02160(75K) or higher.

REMARKS

- As the motor constants measured in the offline auto tuning have been converted into internal data (****), refer to the following setting example when making setting:
  - Setting example: To slightly increase **Pr.90** value (5%)
    If **Pr.90** = "2516" is displayed
    The value can be calculated with "2516 × 1.05 = 2641.8". Therefore set **Pr.90** = "2642".
    (The value displayed has been converted into a value for internal use. Hence, simple addition of a given value to the displayed value has no significance)
- Setting "9999" disables the tuning data. The MM-CF constant is used for the IPM motor MM-CF, and the inverter internal constant is used for a PM motor other than MM-CF.

♦ Parameters referred to ♦

Pr.9 Electronic thermal O/L relay ☞ page 322
Pr.71 Applied motor ☞ page 424
Pr.178 to Pr.189 (input terminal function selection) ☞ page 416
Pr.800 Control method selection ☞ page 160

5.13.4 Online auto tuning Magnetic flux Sensorless Vector

If online auto tuning is selected under Advanced magnetic flux vector control, Real sensorless vector control or vector control, favorable torque accuracy is retained by adjusting temperature even when the resistance value varies due to increase in the motor temperature.

Pr.	Name	Initial value	Setting range	Description
95 **C111**	**Online auto tuning selection**	0	0	Do not perform online auto tuning
			1	Perform online auto tuning at startup
			2	Magnetic flux observer (tuning always)
574 **C211**	**Second motor online auto tuning**	0	0 and 1	Select online auto tuning for the second motor. (same as **Pr.95**)

上正科技有限公司
購買、維修 此手冊零組件
電話： 037-460333
Email: service@repairtw.com
Line id: @2222
www.repairtw.com

(1) Performing online auto tuning at startup (setting value "1")

- By promptly tuning the motor status at startup, accurate operation without being affected by motor temperature is achieved. Also high torque can be provided at very low speed and stable operation is possible.
- When using Advanced magnetic flux vector control (**Pr.80 Motor capacity, Pr.81 Number of motor poles** or Real sensorless vector control (**Pr.80, Pr.81, Pr.800 Control method selection**), select the online auto tuning at start.
- Make sure to perform offline auto tuning before performing online auto tuning.
- Operation method

1) Perform offline auto tuning. (Refer to page 428.)
2) Check that **Pr.96 Auto tuning setting/status** = "3 or 103 (offline auto tuning completion)".
3) Set **Pr.95 Online auto tuning selection** = "1 (online auto tuning at start)".
4) Check that the following parameters are set before starting operation.

Pr.	Description
9	Uses both rated motor current and electronic thermal O/L relay.
71	Applicable motor
80	Motor capacity (with the rated motor current equal to or lower than the rated inverter current)*1
81	Number of motor poles

*1 If a motor with substantially low rated current compared with the rated inverter current is used, speed and torque accuracies may deteriorate due to torque ripples, etc. Set the rated motor current to about 40% or higher of the rated inverter current.

5) In the PU operation mode, press FWD / REV on the operation panel.
For External operation, turn ON the start command (STF signal or STR signal).

(C) Motor constant parameters

REMARKS

- When performing the online auto tuning at start for a lift, consider utilization of a brake sequence function for the brake opening timing at a start or tuning using the external terminal. The tuning is completed in approximately 500 ms at the maximum after the start. Not enough torque may be provided during that period. Caution is required to prevent the object from dropping. Use of the start-time tuning start (X28) signal is recommended to perform tuning. (Refer to page 446.)
- Perform online auto tuning at startup when the motor is stopped.
- The online auto tuning is disabled when the MRS signal is being input, the setting speed is **Pr.13 Starting frequency** or lower (V/F control, Advanced magnetic flux vector control), an inverter fault is occurring, or the inverter's startup condition is not satisfied.
- Online auto tuning does not operate during deceleration and restart from DC injection brake operation.
- It is disabled during JOG operation.
- If automatic restart after instantaneous power failure is selected, automatic restart is prioritized. (Online auto tuning at startup does not run during frequency search.)
  If automatic restart after instantaneous power failure is used together, perform online auto tuning while stopping operation with the X28 signal. (Refer to page 446.)
- Zero current detection and output current detection are enabled during online auto tuning.
- No RUN signal is output during online auto tuning. The RUN signal is turned ON at operation startup.
- If the time between the inverter stop and restart is within 4 s, tuning is performed at startup but its result will not not applied.

(2) Online auto tuning at startup using the external terminal (setting value "1", X28 signal and Y39 signal)

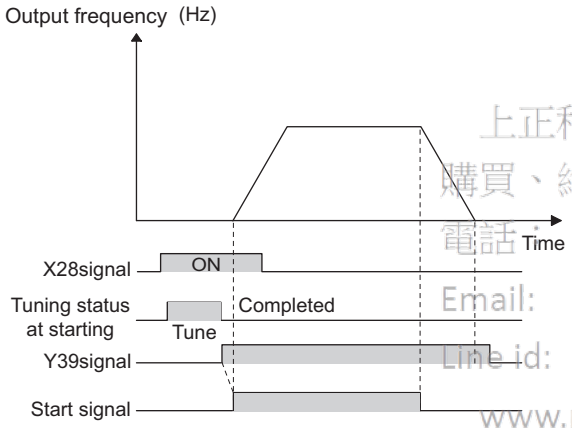

- Before turning ON the start signal (STF or STR), online auto tuning can be performed by turning ON the Start-time tuning start external input (X28) signal in a stopped status. Such operation will minimize the startup delay by turning at start.
- Perform offline auto tuning and set **Pr.95** = "1" (tuning at start).
- When Start time tuning completion (Y39) is OFF, tuning at start can be performed with X28 signal.
- Up to 500 ms can be taken to complete tuning at startup.
- To use the X28 signal, set "28" in any of **Pr.178 to Pr.189 (Input terminal function selection)** to assign the function to an input terminal.
- To use the Y39 signal, set "39 (positive logic) or 139 (negative logic)" in any of **Pr.190 to Pr.196 (output terminal function selection)** to assign function to an output terminal.

上正科技有限公司
購買、維修 此主班委組作
電話：037-466333
Email: service@repairtw.com
Line id: @zzzz
www.repairtw.com

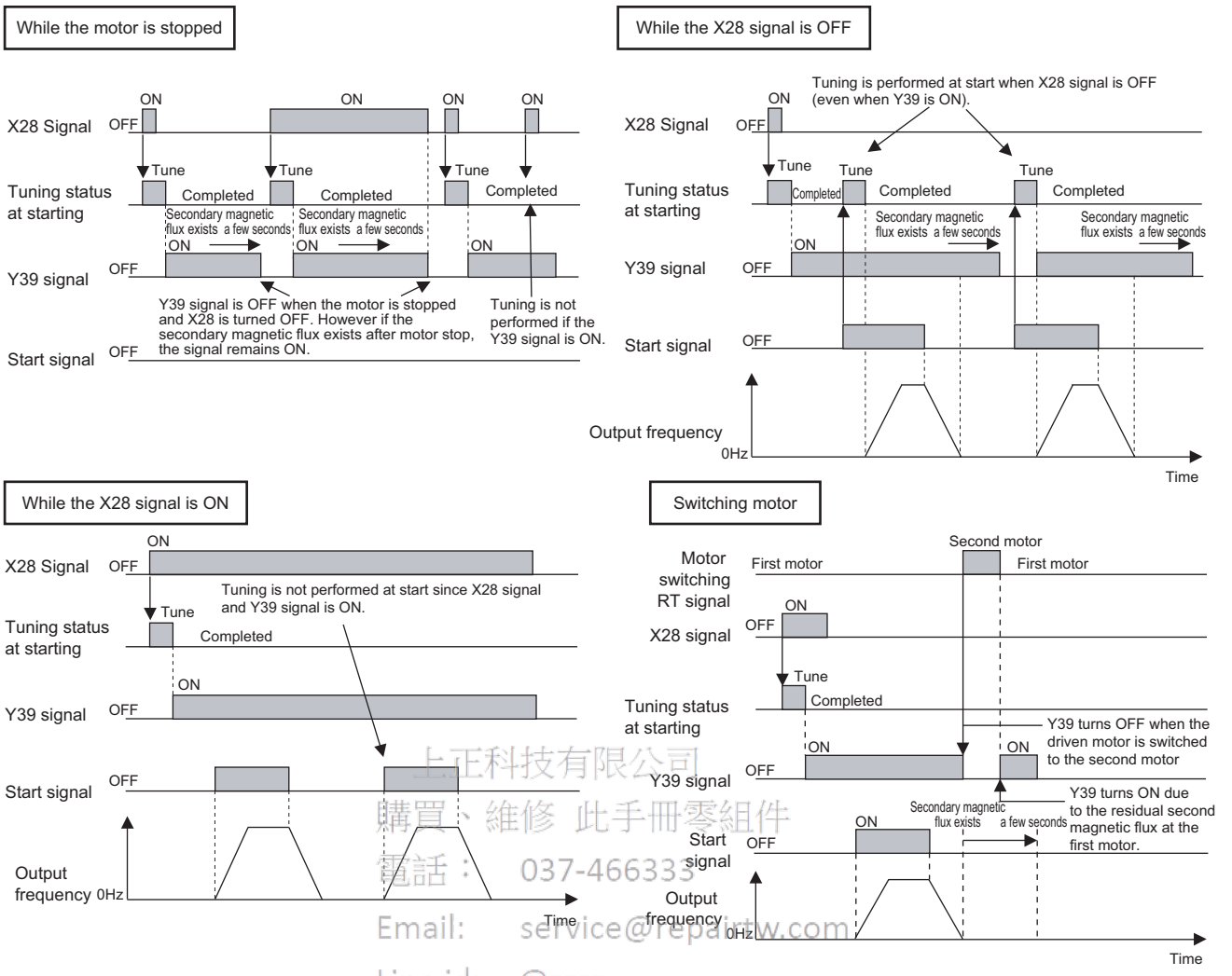

上正科技有限公司
購買、維修 此手冊零組件
電話： 037-466333
Email: service@repairtw.com
Line id: @zzzz
www.repairtw.com

REMARKS

- Even if the start signal is turned ON during zero speed control or servo lock, tuning is performed at startup.
- The Y39 signal remains ON as long as there is second flux even after the motor is stopped.
- The X28 signal is disabled while the Y39 signal is ON.
- The STF and STR signals are enabled after completing tuning at start.
- The Inverter running (RUN) signal is not turned ON during online auto tuning. The RUN signal is turned ON after starting up.
- It is disabled during V/F control or PM sensorless vector control.
- Changing the terminal assignment using **Pr.178 to Pr.189 (input terminal function selection) and Pr.190 to Pr.196 (output terminal function selection)** may affect other functions. Set parameters after confirming the function of each terminal.

(3) Magnetic flux observer (tuning always) (setting value "2")

- If vector control is performed using a motor with an encoder, this setting improves torque accuracy. Estimate or measure the flux within the motor using the current running through the motor and the inverter output voltage. Because the flux of a motor can always be accurately estimated (even during operation), fine characteristics can always be attained without being affected by temperature change in the second resistance.
- When vector control (**Pr.80, Pr.81 or Pr.800**) is used, select the magnetic flux observer. (Refer to page 160.)

REMARKS

- Offline auto tuning is not necessary if selecting magnetic flux observer for SF-V5RU, SF-JR (with encoder), SF-HR (with encoder), SF-JRCA (with encoder) or SF-HRCA (with encoder). (However, when the wiring length is long (30 m or longer as a reference), perform offline auto tuning so that the resistance arises in the long wiring can be reflected to the operation.)

(C) Motor constant parameters

(4) Tuning the second applied motor (Pr.574)

- When switching two different motors by one inverter, set the second motor in **Pr.450 Second applied motor**. (In the initial setting, no second motor is applied.(Refer to page 424.))
  Pr.574 is enabled when the Second function selection (RT) signal is turned ON.

Pr.	Description
450	Applicable motor
453	Motor capacity (with the rated motor current equal to or lower than the rated inverter current)*1
454	Number of motor poles

*1 If a motor with substantially low rated current compared with the rated inverter current is used, speed and torque accuracies may deteriorate due to torque ripples, etc. Set the rated motor current to about 40% or higher of the rated inverter current.

REMARKS

- The RT signal is a second function selection signal. The RT signal also enables other second functions. (Refer to page 416.)
  The RT signal is assigned to the terminal RT in the initial status. Set "3" in any of **Pr.178 to Pr.189** (input terminal function selection) to assign the RT signal to another terminal.
- Changing the terminal assignment using **Pr.178 to Pr.189 (input terminal function selection)** may affect the other functions. Set parameters after confirming the function of each terminal.

♦ Parameters referred to ♦

Pr.9 Electronic thermal O/L relay ☞ page 322
Pr.71 Applied motor ☞ page 424
Pr.80 Motor capacity ☞ page 160, page 428, page 438
Pr.81 Number of motor poles ☞ page 160, page 428, page 438
Pr.96 Auto tuning setting/status ☞ page 428, page 438
Pr.178 to Pr.189 (input terminal function selection) ☞ page 416
Pr.190 to Pr.196 (output terminal function selection) ☞ page 370
Pr.800 Control method selection ☞ page 160

台灣利技有限公司
購買、維修 此手冊零組件
電話 037-466333
Email: service@repairtw.com
Line id: @zzzz
www.repairtw.com

5.13.5 Signal loss detection of encoder signals

V/F Magnetic flux Vector

If encoder signals are disconnected during encoder feedback control, orientation control or vector control, Signal loss detection (E.ECT) is turned ON to shut off the inverter output.

Pr.	Name	Initial value	Setting range	Description
376 C148*1	Encoder signal loss detection enable/disable selection	0	0	Signal loss detection disabled
			1	Signal loss detection enabled

*1 The setting is available only when the FR-A8AP (option) is mounted.

5.14 (A) Application parameters

Purpose	Parameter to set			Refer to page
To operate by switching between the inverter and the commercial power supply operation	Commercial power supply-inverter switchover function	P.A000 to P.A005	Pr.135 to Pr.139, Pr.159	450
To reduce the standby power	Self power management	P.A002, P.A006, P.A007, P.E300	Pr.30, Pr.137, Pr.248, Pr.254	455
To stop the motor with a mechanical brake (operation timing of mechanical brake)	Brake sequence function	P.A100 to P.A106, P.F500, P.A108, P.A109, P.A120 to P.A130	Pr.278 to Pr.285, Pr.292, Pr.639 to Pr.651	457
To stop the motor with a mechanical brake (vibration control at stop-on-contact)	Stop-on-contact control	P.A200, P.A205, P.A206	Pr.270, Pr.275, Pr.276	462
To increase the speed at light load	Load torque high-speed frequency control	P.D301, P.D302 P.A200 to P.A204	Pr.4, Pr.5, Pr.270 to Pr.274	465
To strengthen or weaken the frequency at a constant cycle	Traverse operation	P.A300 to P.A305	Pr.592 to Pr.597	467
To suppress vibration of an object moved by a crane by crane control	Vibration control	P.A310 to P.A317	Pr.1072 to Pr.1079	469
To adjust the stop position (orientation control) of the rotating shaft	Orientation control	P.A510 to P.A512, P.A520, P.A524, P.A525, P.A526 to P.A533, P.A542 to P.A545, P.C140, P.C141	Pr.350 to Pr.366, Pr.369, Pr.393, Pr.396 to Pr.399	471
To perform process control, such as for the pump flow volume and air volume	PID control	P.A600 to P.A606, P.A610 to P.A615, P.A621 to P.A625, P.A640 to P.A644, P.A650 to P.A655, P.A661 to P.A665	Pr.127 to Pr.134, Pr.553, Pr.554, Pr.575 to Pr.577, Pr.609, Pr.610, Pr.753 to Pr.758, Pr.1134, Pr.1135, Pr.1140, Pr.1141, Pr.1143 to Pr.1149	483
	PID pre-charge function	P.A616 to P.A620, P.A656 to P.A660	Pr.760 to Pr.769	499
	PID display adjustment	P.A630 to P.A633, P.A670 to P.A673	C42 to C45 (Pr.934, Pr.935), Pr.1136 to Pr.1139	496
To control the dance roll for winding/unwinding	Dancer control	P.A601, P.A602, P.A605, P.A606, P.A610, P.A611, P.A613, P.A615, P.A624, P.A625, P.F020, P.F021	Pr.44, Pr.45, Pr.128, Pr.134, Pr.609, Pr.610, Pr.1134, Pr.1135	503
To continue operating at analog current input loss	4 mA input check	P.A680 to P.A682	Pr.573, Pr.777, Pr.778	412
To restart without stopping the motor at instantaneous power failure	Automatic restart after instantaneous power failure / flying start function for induction motors	P.A700 to P.A705, P.A710, P.F003	Pr.57, Pr.58, Pr.162 to Pr.165, Pr.299, Pr.611	511
	Frequency search accuracy improvement (V/F control, offline auto tuning)	P.A700, P.A711, P.A712, P.C110, P.C210	Pr.96, Pr.162, Pr.298, Pr.463, Pr.560	519
	Automatic restart after instantaneous power failure / flying start function for IPM motors	P.A700, P.A702, P.F003, P.F004	Pr.57, Pr.162, Pr.611	517
To decelerate the motor to a stop at instantaneous power failure	Power failure time deceleration-to-stop function	P.A730 to P.A735, P.A785	Pr.261 to Pr.266, Pr.294	523
To operate with sequence program	PLC function	P.A800 to P.A804, P.A811 to P.A860	Pr.414 to Pr.417, Pr.498, Pr.1150 to Pr.1199	527
To store the inverter running status to a USB memory device	Trace function	P.A900 to P.A906, P.A910 to P.A920, P.A930 to P.A939	Pr.1020 to Pr.1047	529

上正科技有限公司
購買、維修 此手冊零售
電話： 037-466333
Email: service@repairtw.com
Line id: @zzzz
www.repairtw.com

5.14.1 Commercial power supply-inverter switchover function

V/F Magnetic flux Sensorless Vector

The inverter contains complicated sequence circuits for switching between the commercial power supply operation and inverter operation. Therefore, interlock operation of the magnetic contactor for switching can be easily performed by simply inputting start, stop, and automatic switching selection signals.

Pr.	Name	Initial value	Setting range	Description
57 A702	**Restart coasting time**	9999	0	Coasting time differs according to the inverter capacity.*1
			0.1 to 30 s	Set the waiting time for the inverter to perform a restart at power restoration after an instantaneous power failure.
			9999	No restart
58 A703	**Restart cushion time**	1 s	0 to 60 s	Set the voltage cushion time for restart.
135 A000	**Electronic bypass sequence selection**	0	0	Without electronic bypass sequence
			1	With electronic bypass sequence
136 A001	**MC switchover interlock time**	1 s	0 to 100 s	Set the operation interlock time for MC2 and MC3.
137 A002	**Start waiting time**	0.5 s	0 to 100 s	Set a time period that is a little longer than the time period from the ON signal input to the actual pick-up operation of MC3 (0.3 to 0.5 s).
138 A003	**Bypass selection at a fault**	0	0	Inverter output stop (motor coasting) at inverter failure
			1	Automatic switchover to commercial power supply operation at inverter failure. (Switchover is not possible when an external thermal relay (E.OHT) or CPU fault (E.CPU) is occurring.)
139 A004	**Automatic switchover frequency from inverter to bypass operation**	9999	0 to 60 Hz	Set the frequency where the inverter operation is switched to commercial power supply operation. The inverter operation is performed from a start to **Pr.139** setting, then it switches automatically to the commercial power supply operation when the output frequency is equal to or above **Pr.139**.
			9999	Without automatic switchover
159 A005	**Automatic switchover frequency range from bypass to inverter operation**	9999	0 to 10 Hz	Set the frequency where the commercial power supply operation, which has been switched from the inverter operation with **Pr.139**, switches back to inverter operation. When the frequency command becomes less than (**Pr.139** - **Pr.159**), the motor switches automatically to inverter operation and operates at the frequency of the frequency command. Turning OFF the inverter start command (STF/STR) also switches the operation to the inverter operation.
			9999	To switch the commercial power supply operation, which has been switched from the inverter operation with **Pr.139**, to the inverter operation again, the inverter start command (STF/STR) is turned OFF. The operation switches to the inverter operation, and the motor decelerates to a stop.

上正科技有限公司
購買、維修 此手冊零組件
電話： 037-466333
Email: service@repairtw.com
Line id: @zzzz
www.repairtw.com

*1 The coasting time when **Pr.57** = "0" is as shown below. (When **Pr.162 Automatic restart after instantaneous power failure selection** is set to the initial value.)

FR-A820-00105(1.5K) or lower and FR-A840-00052(1.5K) or lower: 0.5 s
FR-A820-00167(2.2K) to FR-A820-00490(7.5K) and FR-A840-00083(2.2K) to FR-A840-00250(7.5K): 1 s
FR-A820-00630(11K) to FR-A820-03160(55K) and FR-A840-00310(11K) to FR-A840-01800(55K): 3.0 s
FR-A820-03800(75K) or higher and FR-A840-02160(75K) or higher: 5.0 s

(1) Electronic bypass sequence function

- When operating the motor at 60 Hz (or 50 Hz), the motor can be more efficiently operated with a commercial power supply. In addition, if the motor cannot be stopped for a long period of time even for an inverter maintenance and inspection, it is recommended that a commercial power supply circuit be installed.
- When switching between inverter operation and commercial power supply operation, commercial power supply may be accidentally applied to the output side of the inverter. To avoid such situation, provide an interlock where the magnetic contactor at the commercial power supply side turns ON at turn OFF of the magnetic contactor at the inverter output side. The inverter's electronic bypass sequence that outputs timing signals for the magnetic contactors can act as a complicated interlock between the commercial power supply operation and the inverter operation.

REMARKS

- The commercial power supply operation is not available with Mitsubishi vector control dedicated motors (SF-V5RU).

(2) Connection diagram

- A tipical connection diagram of the electronic bypass sequence is shown below.
  Sink logic, **Pr.185** = "7", **Pr.192** = "17", **Pr.193** = "18", and **Pr.193** = "19"

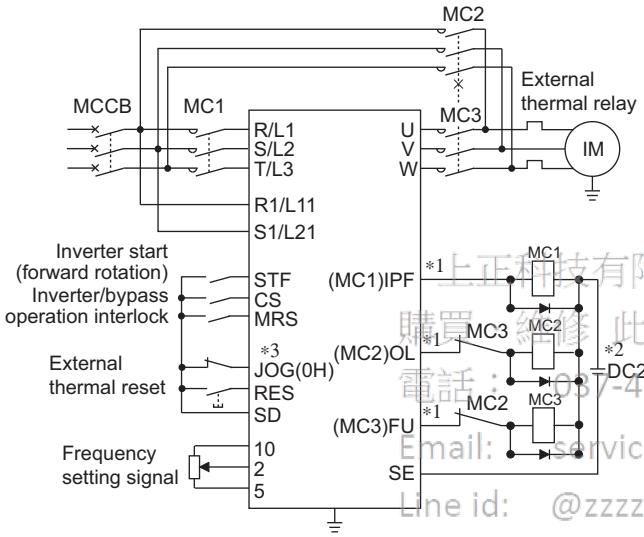

Electronic bypass sequence connection diagram

上正科技有限公司
購買維修此手冊零組件
電話：037-466333
Email: service@repairtw.com
Line id: @zzzz
www.repairtw.com

*1 Be careful of the capacity of the sequence output terminals.
The applied terminals differ by the settings of **Pr.190 to Pr.196 (output terminal function selection)**.

Output terminal capacity	Output terminal permissible load
Open collector output of inverter (RUN, SU, IPF, OL, FU)	24 VDC 0.1 A
Inverter relay output (A1-C1, B1-C1, A2-B2, B2-C2) Relay output option (FR-A8AR)	230 VAC 0.3 A 30 VDC 0.3 A

*2 When connecting a DC power supply, insert a protective diode.
When connecting an AC power supply, use the relay output option (FR-A8AR) and use contact outputs.

*3 The applied terminals differ by the settings of **Pr.180 to Pr.189 (input terminal function selection)**.

REMARKS

- Use the commercial power supply-inverter switchover function in External operation mode. In addition, the wiring terminals R1/L11 and S1/L21 must be connected to a separate power source that does go through MC1. Be sure to connect using a separate power supply.
- Be sure to provide a mechanical interlock for MC2 and MC3.

(A) Application parameters

- Operation of magnetic contactor (MC1, MC2, MC3)

Magnetic contactor	Installation location	Operation		
		During commercial power supply operation	During inverter operation	During inverter fault
MC1	Between power supply and inverter input side	Shorted	Shorted	Open (short by reset)
MC2	Between power supply and motor	Shorted	Open	Open (Selected by **Pr.138**. Always open when the external thermal relay is operating.)
MC3	Between inverter output side and motor	Open	Shorted	Open

- The input signals are as shown below.

Signal	Applied terminal	Function	Operation	MC operation*6		
				MC1*5	MC2	MC3
MRS	MRS	Selects whether or not operation is available.*1	ON ..... Electronic bypass operation available	○	-	-
			OFF..... Electronic bypass operation not available	○	×	Invariance
CS	CS	Inverter/commercial power supply operation switchover*2	ON ..... Inverter operation	○	×	○
			OFF..... Commercial power supply operation	○	○	×
STF (STR)	STF (STR)	Inverter operation command (Disabled during commercial power supply operation)*3	ON ..... Forward rotation (reverse rotation)	○	×	○
			OFF..... Stop	○	×	○
OH	Set one of **Pr.180 to Pr.189** to "7".	External thermal relay input	ON ..... Motor normal	○	-	-
			OFF..... Motor fault	×	×	×
RES	RES	Operation status reset*4	ON ..... Reset	Invariance	×	Invariance
			OFF..... Normal operation	○	-	-

*1 When the MRS signal is OFF, neither the commercial power supply operation nor the inverter operation can be performed.
*2 The CS signal operates only when the MRS signal is ON.
*3 STF(STR) operates only when the MRS and CS signals are both ON.
*4 The RES signal can be used for reset input acceptance with **Pr.75 Reset selection/disconnected PU detection/PU stop selection**.
*5 MC1 turns OFF at an inverter fault.
*6 MC operation
○: MC-ON
×: MC-OFF
-: During inverter operation, MC2-OFF, MC3-ON
During commercial power supply operation, MC2-ON, MC3-OFF
Invariance: The status before changing the signal ON or OFF is held.

- The output signals are as shown below.

Signal	Applied terminal (Pr.190 to Pr.196 setting)	Description
MC1	17	Operation output signal of the magnetic contactor MC1 on the inverter's input side.
MC2	18	Operation output signal of the magnetic contactor MC2 for the commercial power supply operation.
MC3	19	Operation output signal of the magnetic contactor MC3 on the inverter's output side.

上正科技有限公司
購買、維修 此手冊零組件
電話： 037-466333
Email: service@repairtw.com
Line id: @zzzz
www.repairtw.com

(3) Electronic bypass operation sequence

- Example of operation sequence without automatic bypass sequence (**Pr.139** = "9999")

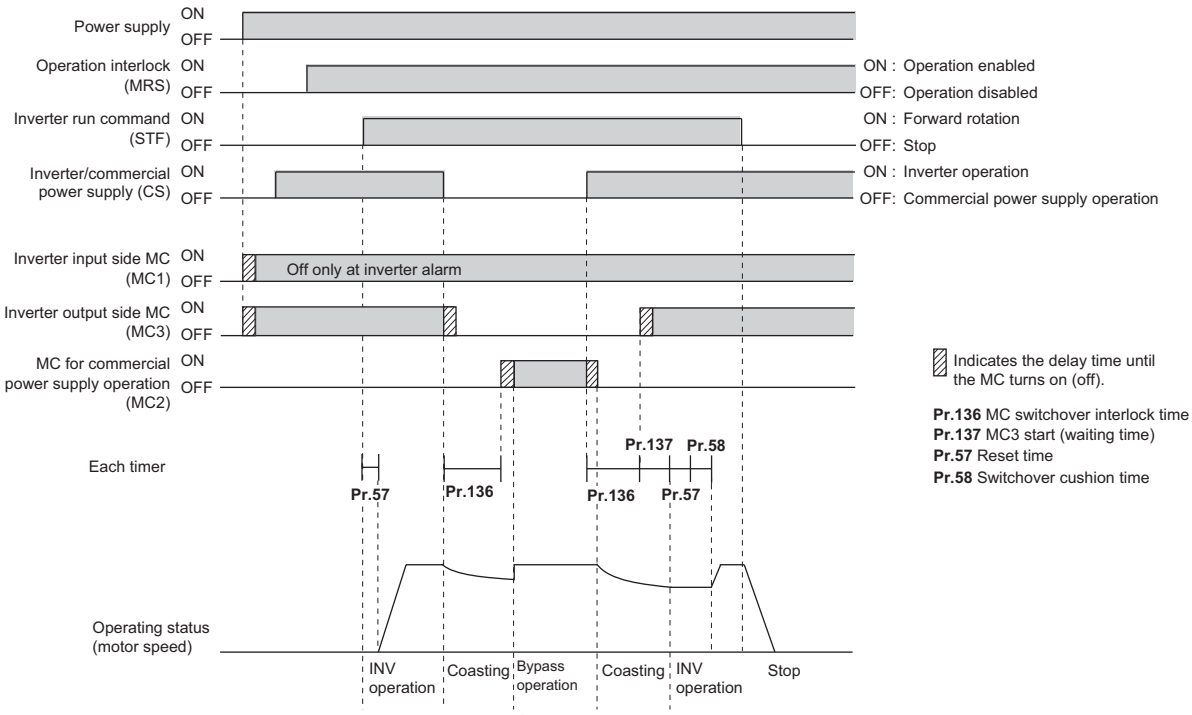

- Example of operation sequence with automatic bypass sequence (**Pr.139** ≠ "9999", **Pr.159** = "9999")

上亞科技有限公司
購買、維修 此手冊零組件
電話： 037-466333
Email: service@repairtw.com
Line id: @zzzz
www.repairtw.com

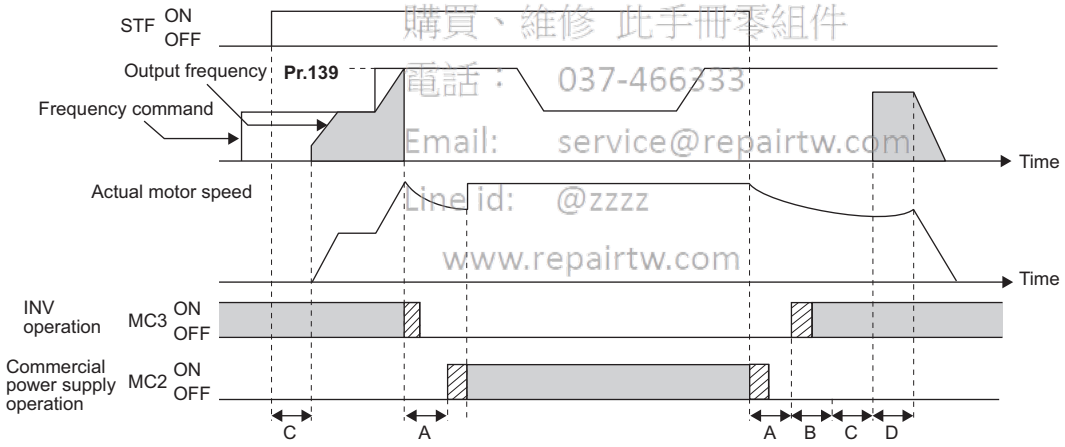

A : **Pr.136 MC switchover interlock time** B : **Pr.137 Start waiting time**
C : **Pr.57 Restart coasting time** D : **Pr.58 Restart cushion time**

- Example of operation sequence with automatic bypass sequence (**Pr.139** ≠ "9999", **Pr.159** ≠ "9999")

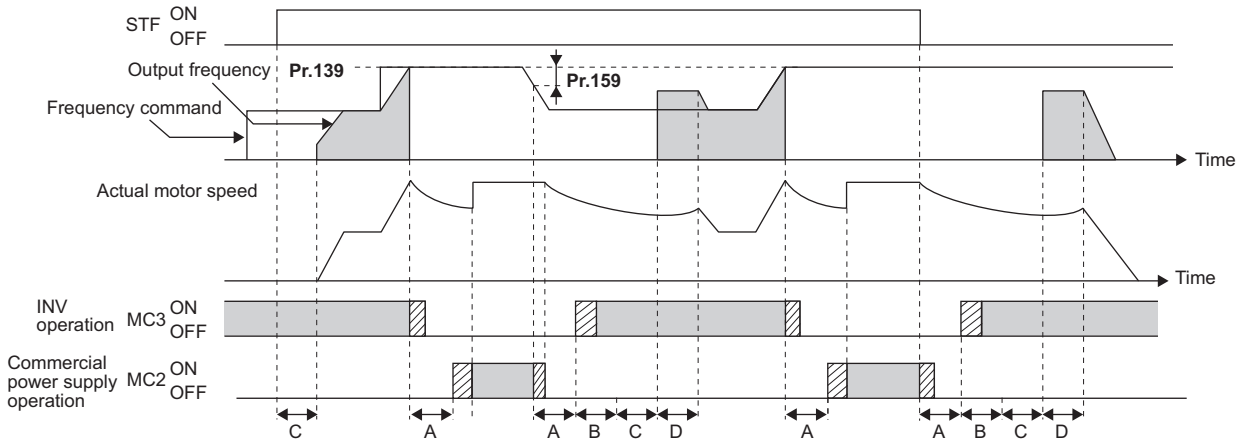

A : **Pr.136 MC switchover interlock time** B : **Pr.137 Start waiting time**
C : **Pr.57 Restart coasting time** D : **Pr.58 Restart cushion time**

(4) Operation

- Procedure for operation

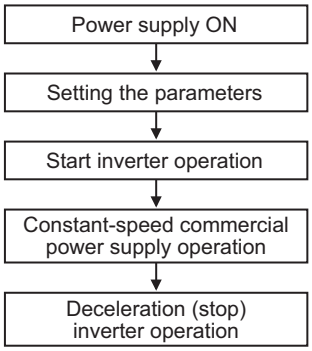

- **Pr.135** = "1" (open collector output terminal of inverter)
- **Pr.136** = "2.0 s"
- **Pr.137** = "1.0 s" (Set the time until MC3 is actually turned ON and the inverter and motor are electrically connected. If the time is short, the restart may not function properly.)
- **Pr.57** = "0.5 s"
- **Pr.58** = "0.5 s" (Always set this to switchover from the commercial power supply operation to the inverter operation.)

- Signal operation after setting parameters

Status	MRS	CS	STF	MC1	MC2	MC3	Remarks
Power ON	OFF (OFF)	OFF (OFF)	OFF (OFF)	OFF→ON (OFF→ON)	OFF (OFF)	OFF→ON (OFF→ON)	External operation mode (PU operation mode)
At start (Inverter)	OFF→ON	OFF→ON	OFF→ON	ON	OFF	ON	
During constant-speed operation (commercial power supply)	ON	ON→OFF	ON	ON	OFF→ON	ON→OFF	MC2 turns ON after MC3 turns OFF. Waiting time is 2 s (while coasting).
For deceleration, switched to the inverter operation (inverter)	ON	OFF→ON	ON	ON	ON→OFF	OFF→ON	MC3 turns ON after MC2 turns OFF. Waiting time is 4 s (while coasting).
Stop	ON	ON	ON→OFF	ON	OFF	ON	

上正科技有限公司
購買、維修 此手冊零組件
電話 037166333
Email: service@repairtw.com
Line id: @zzzz
www.repairtw.com

REMARKS

- Connect the control power (R1/L11, S1/L21) in front of the input-side MC1. If the control power is connected behind the input-side MC1, the electronic bypass sequence function will not operate.
- The electronic bypass sequence function is only enabled when **Pr.135** = "1" and in the External operation mode or combined operation mode (PU speed command and External operation command with **Pr.79** = "3"). MC1 and MC3 turn ON when **Pr.135** = "1" and in an operation mode other than mentioned above.
- MC3 turns ON when the MRS and CS signals are ON and the STF(STR) signal is OFF. If the motor was coasted to a stop from commercial power supply operation at the previous stop, the motor starts running only after waiting the time set in **Pr.137**.
- Inverter operation is only available when the MRS, STF(STR), and CS signals are ON. In all other cases (when the MRS signal is ON), commercial power supply operation is available.
- When the CS signal is OFF, the motor switches to the commercial power supply operation. However, when the STF(STR) signal is OFF, the motor decelerates to a stop during inverter operation.
- From the point where MC2 and MC3 are both turned OFF, there is a waiting time set in **Pr.136**, till MC2 or MC3 is turned ON.
- Even when the electronic bypass sequence is enabled (**Pr.135** = "1"), the **Pr.136 and Pr.137** settings are ignored in PU operation mode. In addition, the input terminals (STF, CS, MRS, OH) return to perform their normal functions.
- When the electronic bypass sequence function (**Pr.135** = "1") and PU operation interlock function (**Pr.79** = "7") are used at the same time, the MRS signal is shared with the PU operation external interlock if the X12 signal is not assigned. (The inverter operation is available when the MRS and CS signals are ON.)
- Set the acceleration time to the level that does not activate the stall prevention operation.
- When switching to the commercial power supply operation while a failure such as an output short circuit is occurring between the magnetic contactor MC3 and the motor, the damage may further spread. When a failure occurs between the MC3 and motor, make sure to provide a protection circuit, such as using the OH signal input.
- Changing the terminal functions with **Pr.178 to Pr.189 and Pr.190 to Pr.196** may affect other functions. Set parameters after confirming the function of each terminal.

♦ Parameters referred to ♦

Pr.11 DC injection brake operation time ☞page 584
Pr.57 Restart coasting time ☞page 511, page 517
Pr.58 Restart cushion time ☞page 511
Pr.79 Operation mode selection ☞page 299
Pr.178 to Pr.189 (input terminal function selection) ☞page 416
Pr.190 to Pr.196 (output terminal function selection) ☞page 370

5.14.2 Self power management

V/F Magnetic flux PM

By turning ON the magnetic contactor (MC) on the input side before the motor is started and turning OFF the MC after the motor is stopped, supplying power to the main circuit is stopped, reducing the standby power.

Pr.	Name	Initial value	Setting range	Description
248 A006	Self power management selection	0	0	Self power management function disabled
			1	Self power management function enabled (main circuit OFF at protective function activation)
			2	Self power management function enabled (main circuit OFF at protective function activation due to a circuit failure)
137 A002	Start waiting time	0.5 s	0 to 100 s	Set a time period that is a little longer than the time period from the ON signal input to the actual pick-up operation of MC1 (0.3 to 0.5 s).
254 A007	Main circuit power OFF waiting time	600 s	0 to 3600 s	Set the waiting time until the main circuit power supply is turned OFF after the motor is stopped.
			9999	The main circuit power supply is turned OFF only when the protective function selected by **Pr.248** is activated.
30 E300	Regenerative function selection	0	100, 101	Power supply to the inverter: AC (terminals R, S, and T) When power is supplied only to the control circuit, and then switched to be supplied to both the control and main circuits, inverter reset is not performed.
			0 to 2, 10, 11, 20, 21, 102, 110, 111, 120, 121	For other settings, refer to page 593.

上正科技有限公司
購買、維修 此手冊零組件
電話： 037-466333
Email: service@repairtw.com
Line id: @zzzz
www.repairtw.com

(1) Connection diagram

- For sink logic and **Pr.192**="17" (terminal R1, S1, and 24 V external power supply inputs)

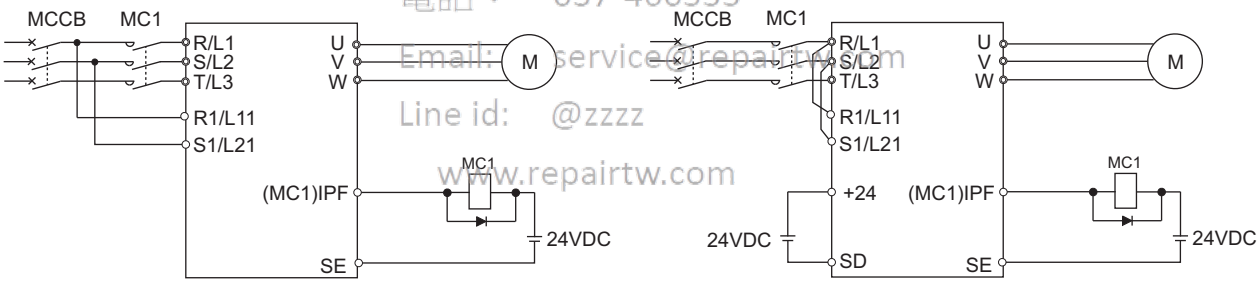

(2) Operation of the self power management function

- This function controls the magnetic contactor (MC) on the input side using the output relay to reduce the standby power during inverter stop. With the terminals R1/L11 and S1/L21 (refer to page 54) and 24 V external power supply input (refer to page 56), the main circuit power supply and control circuit power supply are separated, and the MC for main circuit power supply is controlled by the electronic bypass MC1 signal.
- Set "1 or 2" in **Pr.248 Self power management selection** and "100 or 101" in **Pr.30 Regenerative function selection** (inverter power supply terminals R, S, and T, no inverter reset at supplying power to the main circuit), and set "17 (positive logic)" in any of **Pr.190 to Pr.196 (output terminal function selection)** to assign the electronic bypass MC1 (MC1) signal to an output terminal.
- After the inverter is stopped and the time set in **Pr.11 DC injection brake operation time** and **Pr.254 Main circuit power OFF waiting time** have passed, turning OFF the MC1 signal releases the MC on the input side (main circuit power supply OFF). Set **Pr.254** to prevent frequent MC operation.
- Turning ON the start signal turns ON the MC1 signal and closes the MC on the input side (main circuit power supply ON). After the time set in **Pr.137 Start waiting time** has passed, the inverter starts. Set time slightly longer (about 0.3 to 0.5 s) than the time until the MC actually starts suction after MC1 is turned ON in **Pr.137**.

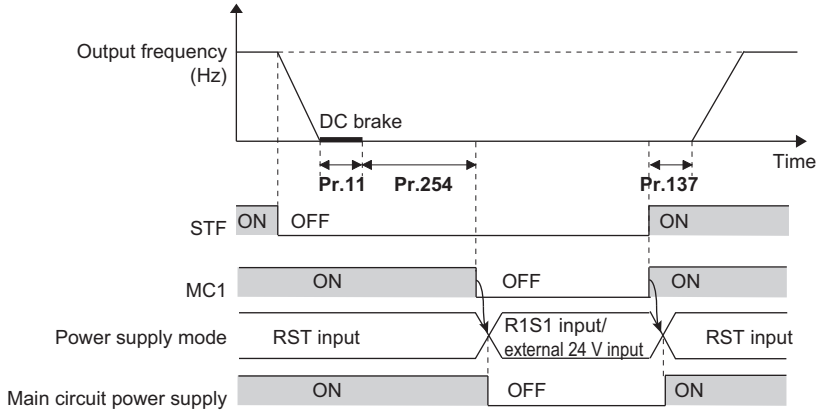

- When the protective function of the inverter is activated, the MC1 signal is immediately turned OFF according to the **Pr.248** setting. (The MC1 signal is turned OFF before the time set in **Pr.254** has passed.)
  When **Pr.248**="1", the MC1 signal is turned OFF when the protective function is activated due to any cause.
  When **Pr.248**="2", the MC1 signal is turned OFF only when the protective function is activated due to an error resulted from a failure in the inverter circuit or a wiring error (refer to the following table). (For the alarm details, refer to **page 623**.)

Fault record
Inrush current limit circuit fault(E.IOH)
CPU fault(E.CPU)
CPU fault(E.6)
CPU fault(E.7)
Parameter storage device fault(E.PE)
Parameter storage device fault(E.PE2)
24 VDC power fault(E.P24)
Operation panel power supply short circuit RS-485 terminals power supply short circuit(E.CTE)
Output side earth (ground) fault overcurrent(E.GF)
Output phase loss(E.LF)
Brake transistor alarm detection(E.BE)
Internal circuit fault(E.13/E.PBT)

上正科技有限公司
購買、維修 此手冊零組件
電話： 037-466333
Email: service@repairtw.com
Line id: @zzzz
www.repairtw.com

REMARKS

- When the start signal is turned OFF before the time set in **Pr.137** has passed after the start signal is turned ON, the inverter does not start and the MC1 signal is turned OFF after the time set in **Pr.254** has passed.
  If the start signal is turned ON again before the time set in **Pr.254** has passed, the inverter immediately starts outputting.

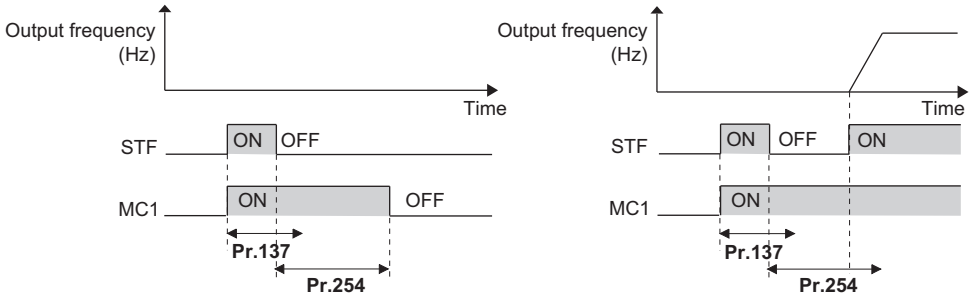

- At inverter reset, the status of the MC1 signal is held and operation of the magnetic contactor is not performed.
- When the inverter stops the output due to, for example, the Output stop (MRS) signal, the MC1 signal is turned OFF after the time set in **Pr.254** has passed.
- During the stop, turning ON the External DC injection brake operation start signal (X13) and Pre-excitation/servo ON signal (LX) turns ON the MC1 signal.
- Repeated operation of the magnetic contactor due to frequent start and stop or activation of the protective function may shorten the inverter life.
- Changing the terminal assignment using **Pr.190 to Pr.196 (output terminal function selection)** may affect the other functions. Set parameters after confirming the function of each terminal.

♦ Parameters referred to ♦

Pr.11 DC injection brake operation time ☞page 584
Pr.30 Regenerative function selection ☞page 593
Pr.190 to Pr.196 (output terminal function selection) ☞page 370

5.14.3 Brake sequence function

Magnetic flux Sensorless Vector PM

This function outputs operation timing signals of the mechanical brake from the inverter, such as for lift applications. This function is useful in preventing load slippage at a start due to poor mechanical brake timing and overcurrent alarm in stop status and enable secure operation.

Pr.	Name	Initial value	Setting range	Description
278 A100	**Brake opening frequency**	3 Hz	0 to 30 Hz	Set the rated slip frequency of the motor + approx. 1.0 Hz. This can be set only when **Pr.278** ≤ **Pr.282**.
279 A101	**Brake opening current**	130%	0 to 400%	If the setting is too low, dropping of the load is more likely to occur at a start, and generally, it is set between 50 and 90%. The rated inverter current is regarded as 100%.
280 A102	**Brake opening current detection time**	0.3 s	0 to 2 s	Generally set between 0.1 and 0.3 s.
281 A103	**Brake operation time at start**	0.3 s	0 to 5 s	Set the mechanical delay time until braking eases. When **Pr.292** = "8" set the mechanical delay time until braking eases + approx. 0.1 to 0.2 s.
282 A104	**Brake operation frequency**	6 Hz	0 to 30 Hz	Turn OFF the brake opening request signal (BOF) and set the frequency for operating the electromagnetic brake. Generally, set the setting value of **Pr.278** + 3 to 4 Hz. This can be set only when **Pr.282** ≥ **Pr.278**.
283 A105	**Brake operation time at stop**	0.3 s	0 to 5 s	When **Pr.292** = "7" set the mechanical delay time until the brake closes + 0.1 s. When **Pr.292** = "8" set the mechanical delay time until the brake closes + approx. 0.2 to 0.3 s.
284 A106	**Deceleration detection function selection**	0	0	The deceleration detection function disabled.
			1	The protective function activates when the deceleration speed of the deceleration operation is not normal.
285 A107	**Overspeed detection frequency***1	9999	0 to 30 Hz	The brake sequence fault (E.MB1) activates when the difference between the detection frequency and output frequency is equal to or greater than the setting value under encoder feedback control.
			9999	Overspeed detection disabled.
292 F500	**Automatic acceleration/ deceleration**	0	0	Normal operation
			1, 11	Operation with the shortest acceleration/deceleration time.(Refer to page 293.)
			3	Operation with the optimum acceleration/deceleration time.(Refer to page 293.)
			5, 6	Lift operation 1, 2. (Refer to page 296.)
			7	Brake sequence mode 1
			8	Brake sequence mode 2
639 A108	**Brake opening current selection**	0	0	Brake opening by output current
			1	Brake opening by motor torque
640 A109	**Brake operation frequency selection**	0	0	Brake closing operation by frequency command
			1	Brake closing operation by the actual motor rotation speed (estimated value)
641 A130	**Second brake sequence operation selection**	0	0	Normal operation when the RT signal is ON
			7	Second brake sequence 1 when the RT signal is ON
			8	Second brake sequence 2 when the RT signal is ON
			9999	First brake sequence 1 is valid when the RT signal is ON

上正科技有限公司
購買、維修 此手冊更新
電話： 037-466338
Email: service@repairtw.com
Line id: @zzzz
www.repairtw.com

(A) Application parameters

Pr.	Name	Initial value	Setting range	Description	
642 A120	**Second brake opening frequency**	3 Hz	0 to 30 Hz	Refer to **Pr.278**.	Set the second brake sequence function. The second brake sequence function is enabled when the RT signal is ON.
643 A121	**Second brake opening current**	130%	0 to 400%	Refer to **Pr.279**.	
644 A122	**Second brake opening current detection time**	0.3 s	0 to 2 s	Refer to **Pr.280**.	
645 A123	**Second brake operation time at start**	0.3 s	0 to 5 s	Refer to **Pr.281**.	
646 A124	**Second brake operation frequency**	6 Hz	0 to 30 Hz	Refer to **Pr.282**.	
647 A125	**Second brake operation time at stop**	0.3 s	0 to 5 s	Refer to **Pr.283**.	
648 A126	**Second deceleration detection function selection**	0	0, 1	Refer to **Pr.284**.	
650 A128	**Second brake opening current selection**	0	0, 1	Refer to **Pr.639**.	
651 A129	**Second brake operation frequency selection**	0	0, 1	Refer to **Pr.640**.	

∗1 The speed deviation excess detection frequency when FR-A8AP (option) is mounted during vector control. (For the details, refer to page 202.)

(1) Connection diagram

- Sink logic
- **Pr.184** = 15
- **Pr.190** = 20

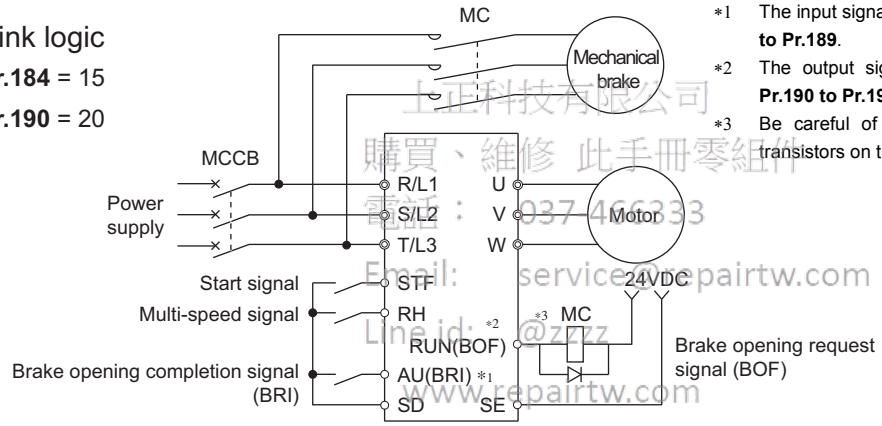

∗1 The input signal terminals differ by the settings of **Pr.178 to Pr.189**.

∗2 The output signal terminals differ by the settings of **Pr.190 to Pr.196**.

∗3 Be careful of the permissible current of the built-in transistors on the inverter. (24 VDC 0.1 A)

上誼科技有限公司
購買、維修 此手冊零組件
電話： 037-466333
Email: service@repairtw.com
Line id: @zzzz
www.repairtw.com

REMARKS

- The automatic restart after instantaneous power failure function and orientation function do not operate when brake sequence is selected.
- To use this function, set the acceleration/deceleration time to 1 s or higher.
- Changing the terminal assignment using **Pr.178 to Pr.189 (input terminal function selection)** and **Pr.190 to Pr.196 (output terminal function selection)** may affect the other functions. Set parameters after confirming the function of each terminal.

(2) Setting the brake sequence operation

- Select Real sensorless vector control, vector control (speed control), or Advanced magnetic flux vector control.
- Set **Pr.292** = "7 or 8 (braking sequence operation)".
  To ensure sequence operation, it is recommended to use with **Pr.292** = "7" (with brake opening completion signal input).
- Set "15" in any of **Pr.178 to Pr.189 (input terminal function selection)**, and assign the brake opening completion signal (BRI) to the input terminal.
- Set "20" (positive logic) or "120" (negative logic) in any of **Pr.190 to Pr.196 (output terminal function selection)**, and assign the brake opening request signal (BOF) to the output terminal.
- Use **Pr.639** Brake opening current selection to select whether the output current or the motor torque is used as a reference for the brake opening operation.
- Under Real sensorless vector control, vector control, or PM sensorless vector control, use **Pr.640** Brake operation frequency selection to select whether the frequency command or the actual motor speed (estimated value) is used as a reference for brake closing operation.
  If the brake operation timing is different from the motor speed because of the load, set **Pr.640** = "1 (brake operation with the actual motor speed (estimated value))".
- Under Advanced magnetic flux vector control, perform brake operation while referring to the frequency command regardless of the **Pr.640** setting.

(3) Operation with brake opening completion signal input (Pr.292 = "7")

- When the start signal is input to the inverter, the inverter starts running, and when the output frequency reaches the frequency set in **Pr.278 Brake opening frequency** and the output current or the motor torque is equal to or greater than the **Pr.279 Brake opening current** setting, the brake opening request signal (BOF) is output after the time set in **Pr.280 Brake opening current detection time**.
  The brake opening completion signal (BRI) is input, and the output frequency is increased to the set speed after the set time in **Pr.281 Brake operation time at start**.
- When the inverter decelerates to the frequency set in **Pr.282 Brake operation frequency** during deceleration, the inverter turns OFF the BOF signal and decelerates further to the frequency set in **Pr.278**. After electromagnetic brake operation completes and the inverter recognizes the turn OFF of the BRI signal, the inverter holds the frequency set in **Pr.278** for the time set in **Pr.283 Brake operation time at stop**. And after the time set in **Pr.283** passes, the inverter decelerates again. The inverter outputs is shut off when the frequency reaches **Pr.13 Starting frequency** setting or 0.5 Hz, whichever is lower.

上正科技有限公司
購買、維修 此手冊零組件
電話： 037-466393
Email: service@repairtw.com
Line id: @zzzz
www.repairtw.com

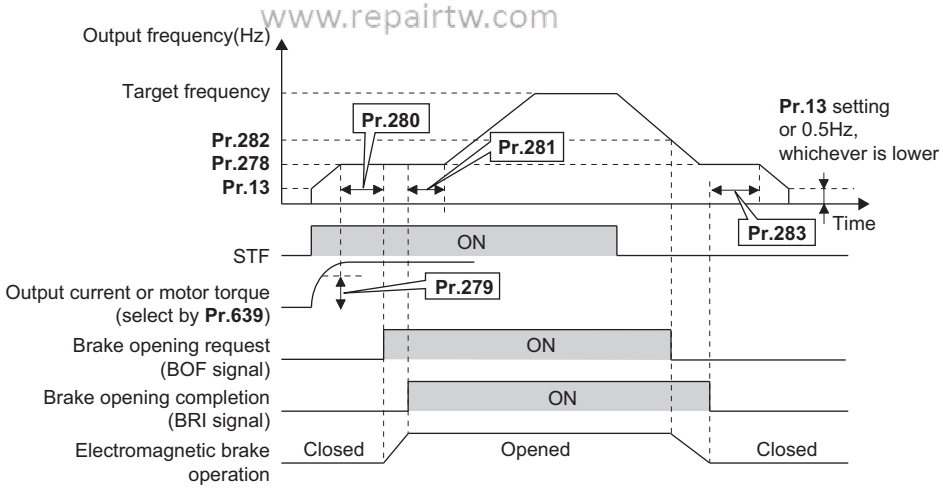

(4) Operation without brake opening completion signal input (Pr.292 = "8")

- When the start signal is input to the inverter, the inverter starts running, and when the output frequency reaches the frequency set in **Pr.278 Brake opening frequency** and the output current or the motor torque is equal to or greater than the **Pr.279 Brake opening current** setting, the brake opening request signal (BOF) is output after the time set in **Pr.280 Brake opening current detection time**.
  After the BOF signal is output, the output frequency is increased to the set speed after the set time in **Pr.281 Brake operation time at start**.
- When the inverter decelerates to the frequency set to **Pr.282 Brake operation frequency** during deceleration, the inverter turns OFF the brake opening request signal (BOF) and decelerates further to the frequency set in **Pr.278**. After the turn OFF of BOF signal, the inverter holds the frequency set in **Pr.278** for the time set in **Pr.283 Brake operation time at stop**. And after the set time in **Pr.283** passes, the inverter decelerates again. **Pr.13 Starting frequency** setting or 0.5 Hz, whichever is lower

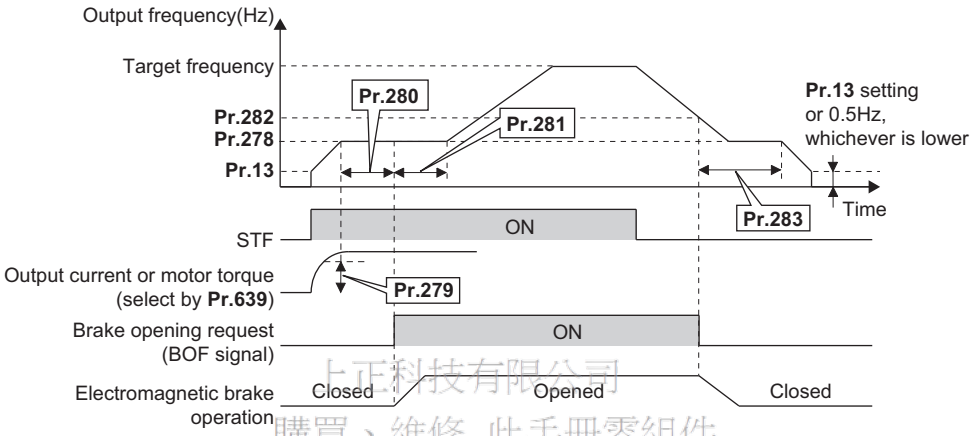

上正科技有限公司
購買、維修 此手冊零組件
電話： 037-466333
Email: service@repairtw.com
www.repairtw.com

REMARKS

- Even if the brake sequence operation has been selected, inputting the JOG signal (JOG operation) will change the operation method to normal operation and give a priority to the JOG operation. Note that the JOG signal input by the brake sequence function is invalid during operation.

(5) Set multiple brake sequence functions (Pr.641)

- When the second brake sequence function is set, it is possible to switch between and use two types of brake sequence functions. Turning ON the RT signal enables the second brake sequence function.
- Select the operation of the second brake sequence function with **Pr.641 Second brake sequence operation selection**.

Pr.641 setting	Brake sequence function when the RT signal is ON
0 (initial value)	Normal operation (The first and second brake sequence functions invalid)
7	Second brake sequence mode 1
8	Second brake sequence mode 2
9999	First brake sequence mode is valid

- Set "45" in any of **Pr.178 to Pr.189 (input terminal function selection)** to assign the Second brake sequence open completion signal (BRI2) to the input terminal.
- To use the Second brake opening request signal (BOF2), set "22 (positive logic)" or "122 (negative logic)" in any of **Pr.190 to Pr.196 (output terminal function selection)** to assign the function to the output terminal.
- The method of setting the second brake sequence parameters is the same as that for the corresponding first brake sequence function parameters.
- Switchover of the brake sequence function by RT signal is valid when the inverter is stopped.

(6) Protective function

If one of the following faults occur while the brake sequence function is enabled, the inverter trips, shuts off output, and turns OFF the brake opening request signal (BOF).

Fault indication	Description
E.MB1	When (Detection frequency) - (output frequency) ≥ **Pr.285** during encoder feedback control. When **Pr.285** (Overspeed detection function) = "9999", overspeed is not detected.
E.MB2	When deceleration is not normal during deceleration operation from the set frequency to the frequency set in **Pr.282** (when **Pr.284** = "1") (except stall prevention operation)
E.MB3	When the BOF signal turned ON while the motor is at a stop. (load slippage prevention function)
E.MB4	When more than 2 s have elapsed after the start command (forward or reverse rotation) is input, but the BOF signal does not turn ON.
E.MB5	When more than 2 s have elapsed after the BOF signal turned ON, but the BRI signal does not turn ON.
E.MB6	When the inverter had turned ON the brake opening request signal (BOF), but the BRI signal turned OFF.
E.MB7	When more than 2 s have elapsed after the BOF signal turned OFF at a stop, but the BRI signal does not turn OFF.

REMARKS

- During PM sensorless vector control, the brake sequence function is available with the IPM motor MM-CF only.
- During deceleration, inverter output is shut OFF when the frequency reaches **Pr.13 Starting frequency** or 0.5 Hz, whichever is lower. For **Pr.278 Brake opening frequency**, set a frequency equal to or higher than the **Pr.13** setting or 0.5 Hz.
- **Pr.285 Overspeed detection frequency** is valid under encoder feedback control (used with the FR-A8AP (option)) even if a value other than "7 or 8" is set in **Pr.292 Automatic acceleration/deceleration**.
- Setting **Pr.278** too high activates the stall prevention and may cause E.MB4.
- E.MB4 occurs when the acceleration time from **Pr.13** to **Pr.278** + **Pr.280** reaches or exceeds 2 s.

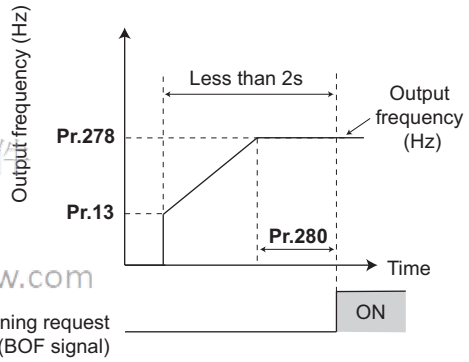

上正科技有限公司
購買、維修 此手冊零組件
電話： 037-466333
Email: service@repairtw.com
Line id: @zzzz
www.repairtw.com

♦ Parameters referred to ♦

Pr.3 Base frequency ☞page 578
Pr.180 to Pr.186 (input terminal function selection) ☞page 416
Pr.190 to Pr.195 (output terminal function selection) ☞page 370

5.14.4 Stop-on-contact control Magnetic flux Sensorless

To ensure accurate positioning at the upper limit, etc. of a lift, stop-on-contact control causes the mechanical brake to close while the motor creates a holding torque to keep the load in contact with a mechanical stopper, etc.
This function suppresses vibration that is likely to occur when the load is stopped upon contact in lift applications, thereby ensuring reliable and highly accurate positioning stop.

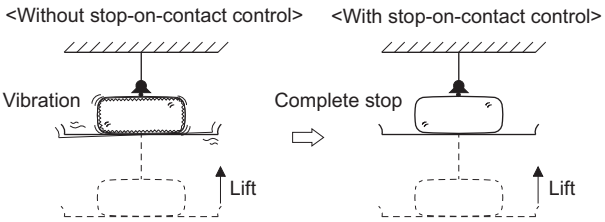

Pr.	Name	Initial value	Setting range	Description
6 D303	**Multi-speed setting (low speed)**	10 Hz	0 to 590 Hz	Set the output frequency for stop-on-contact control.
22 H500	**Stall prevention operation level**	150%	0 to 400%	Set the stall prevention operation level for stop-on-contact control. The smaller value set in either **Pr.22** or **Pr.48** has priority.
48 H600	**Second stall prevention operation level**	150%	0 to 400%	
270 A200	**Stop-on contact/load torque high-speed frequency control selection**	0	0	Normal operation
			1	Stop-on-contact control
			2	Load torque high-speed frequency control (Refer to page 465.)
			3	Stop-on contact + load torque high speed frequency control (Refer to page 465)
			11	Stop-on-contact control — E.OLT is invalid under stop-on-contact control
			13	Stop-on contact + load torque high speed frequency control (Refer to page 465.) — E.OLT is invalid under stop-on-contact control
275 A205	**Stop-on contact excitation current low-speed multiplying factor**	9999	0 to 300%	Set the force (holding torque) for stop-on-contact control. Normally, set it from 130 to 180%.
			9999	No compensation.
276 A206	**PWM carrier frequency at stop-on contact**	9999	0 to 9*1	Set a PWM carrier frequency for stop-on-contact control. For Real sensorless vector control, the carrier frequency is always 2 kHz when the setting value is 0 to 5 and always 6 kHz when the setting value is 6 to 9. (Valid at the output frequency of 3 Hz or less.)
			0 to 4*2	
			9999	As set in **Pr.72 PWM frequency selection**.

*1 The setting range of FR-A820-03160(55K) or lower and FR-A840-01800(55K) or lower
*2 The setting range of FR-A820-03800(75K) or higher and FR-A840-02160(75K) or higher

上正科技有限公司
購買、維修 此手冊零組件
電話： 037-466333
Email: service@repairtw.com
Line id: @zzzz
www.repairtw.com

(1) Connection and operation example

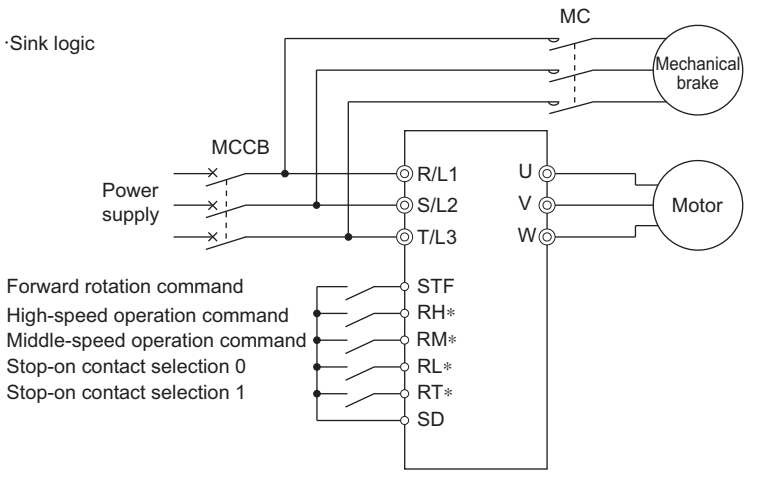

* The input terminal used differs according to the **Pr.180 to Pr.189** settings.

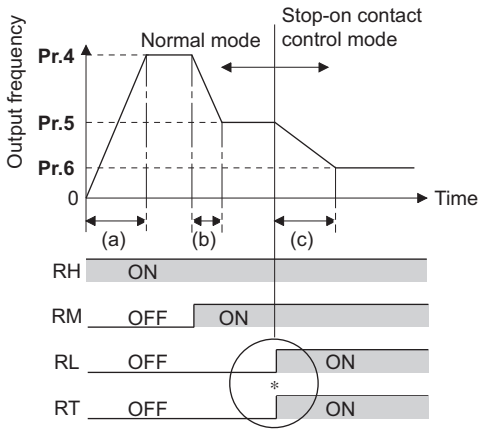

* Goes into stop-on-contact control mode when both RL and RT switch on.
RL and RT may be switched on in any order with any time difference

(a):Acceleration time(**Pr.7**)
(b):Deceleration time(**Pr.8**)
(c):Second deceleration time(**Pr.44**/**Pr.45**)

(2) Setting the stop-on-contact control

- Make sure that the inverter is in External or Network operation mode. (Refer to page 299.)
- Select either Real sensorless vector control (speed control) or Advanced magnetic flux vector control.
- Set "1, 3, 11 or 13" in **Pr.270 Stop-on contact/load torque high-speed frequency control selection**.
- Set the output frequency for stop-on-contact control in **Pr.6 Multi-speed setting (low speed)**.
  Set the frequency as low as possible (about 2 Hz). If a frequency higher than 30 Hz is set, it operates with 30 Hz.
- When both the RT and RL signals are switched ON, the inverter enters the stop-on-contact control, and operation is performed at the frequency set in **Pr.6** independently of the preceding speed.
- Setting **Pr.270** = "11 or 13" disables stall prevention stop (E.OLT) during stop-on-contact control (with both RL and RT signals ON).

REMARKS

- By increasing the **Pr.275** setting, the low-speed (stop-on-contact) torque increases, but overcurrent fault (E.OC[]) may occur or the machine may oscillate in stop-on-contact status.
- The stop-on-contact function is different from the servo-lock function, and if used to stop or hold a load for an extended period, this function can cause the motor to overheat.
  After a stop, immediately switch to a mechanical brake to hold the load.
- Under the following operating conditions, the stop-on-contact function is invalid:
  PU operation **(Pr.79)**, JOG operation (JOG signal), PU + External operation **(Pr.79)**, PID control function operation **(Pr.128)**, Remote setting function operation **(Pr.59)**, Automatic acceleration/deceleration **(Pr.292)**, Start time tuning, Orientation control function operation
- When performing stop-on-contact control during encoder feedback control, encoder feedback control is invalid due to a transition to the stop-on-contact control mode.

(3) Function switching of stop-on-contact control selection

Main functions	Normal operation (either RL or RT is OFF or both are OFF)		Stop-on-contact control (both RL and RT are ON)	
	Real sensorless vector control	Advanced magnetic flux vector control	Real sensorless vector control	Advanced magnetic flux vector control
Output frequency	Multi-speed, 0 to 5 V, 0 to 10 V 4 to 20 mA, etc.		**Pr.6** setting	
Stall prevention operation level	—	**Pr.22** setting	—	The smaller value set in either **Pr.22** or **Pr.48**.*1
Torque limit level	**Pr.22** setting	—	**Pr.22** setting	—
Excitation current low-speed scaling factor	—		The current is compensated by **Pr.275** (50 to 300%) setting from normal operation.	
Carrier frequency	**Pr.72** setting		When output frequency is 3 Hz or lower, **Pr.276** setting (**Pr.72** when **Pr.276** = "9999")	
Fast-response current limit	—	Enabled	—	Disabled

*1 When RL and RT are ON, **Pr.49 Second stall prevention operation frequency** is invalid.

上正科技有限公司
購買、維修 此手冊零組件
電話： 037-466333
Email: service@repairtw.com
Line id: @zzzz
www.repairtw.com

(4) Setting the frequency during stop-on-contact control (Pr.270 = "1, 3, 11 or 13")

- The following table lists the frequencies set when the input terminals (RH, RM, RL, RT, JOG) are selected together. Bold frame indicates stop-on-contact control is valid.
- Stop-on-contact control is disabled when remote setting function is selected (**Pr.59** = "1 to 3").

Input signal					Set frequency
RH	RM	RL	RT	JOG	
ON					Pr.4 Multi-speed setting (high speed)
	ON				Pr.5 Multi-speed setting (middle speed)
		ON			Pr.6 Multi-speed setting (low speed)
			ON		By 0 to 5 V (0 to 10 V), 4 to 20 mA input
				ON	Pr.15 Jog frequency
ON	ON				Pr.26 Multi-speed setting (speed 6)
ON		ON			Pr.25 Multi-speed setting (speed 5)
ON			ON		Pr.4 Multi-speed setting (high speed)
ON				ON	Pr.15 Jog frequency
	ON	ON			Pr.24 Multi-speed setting (speed 4)
	ON		ON		Pr.5 Multi-speed setting (middle speed)
	ON			ON	Pr.15 Jog frequency
		ON	ON		Pr.6 Multi-speed setting (low speed)
		ON		ON	Pr.15 Jog frequency
			ON	ON	Pr.15 Jog frequency

Input signal					Set frequency
RH	RM	RL	RT	JOG	
		ON	ON	ON	Pr.15 Jog frequency
	ON		ON	ON	Pr.15 Jog frequency
	ON	ON		ON	Pr.15 Jog frequency
	ON	ON	ON		Pr.6 Multi-speed setting (low speed)
ON			ON	ON	Pr.15 Jog frequency
ON		ON		ON	Pr.15 Jog frequency
ON		ON	ON		Pr.6 Multi-speed setting (low speed)
ON	ON			ON	Pr.15 Jog frequency
ON	ON		ON		Pr.26 Multi-speed setting (speed 6)
ON	ON	ON			Pr.27 Multi-speed setting (speed 7)
	ON	ON	ON	ON	Pr.15 Jog frequency
ON		ON	ON	ON	Pr.15 Jog frequency
ON	ON		ON	ON	Pr.15 Jog frequency
ON	ON	ON		ON	Pr.15 Jog frequency
ON	ON	ON	ON		Pr.6 Multi-speed setting (low speed)
ON	ON	ON	ON	ON	Pr.15 Jog frequency
					By 0 to 5 V (0 to 10 V), 4 to 20 mA input

上正科技有限公司
購買、維修 此手冊零組件
電話：037-466333
Email: service@repairtw.com
Line id: @zzzz
www.repairtw.com

REMARKS

- Changing the terminal assignment using **Pr.178 to Pr.189 (input terminal function selection)** may affect the other functions. Set parameters after confirming the function of each terminal.

♦ Parameters referred to ♦

Pr.4 to Pr.6, Pr.24 to Pr.27 (multi-speed setting) ☞page 319
Pr.15 Jog frequency ☞page 318
Pr.22 Stall prevention operation level, Pr.48 Second stall prevention operation level ☞page 336
Pr.22 Torque limit level ☞page 181
Pr.59 Remote function selection ☞page 288
Pr.72 PWM frequency selection ☞page 270
Pr.79 Operation mode selection ☞page 299
Pr.95 Online auto tuning selection ☞page 445
Pr.128 PID action selection ☞page 483
Pr.178 to Pr.189 (input terminal function selection) ☞page 416
Pr.270 Stop-on contact/load torque high-speed frequency control selection ☞page 465
Pr.292 Automatic acceleration/deceleration ☞page 293, page 296

5.14.5 Load torque high speed frequency control

Load torque high-speed frequency control is a function that automatically sets the maximum operable frequency according to the load.
The load size during power driving is estimated by detecting average currents at set timings after a start. When the load is light, the frequency is increased from the originally-set frequency. (In regenerative driving, the frequency is not increased.)
This function is designed to increase speed automatically under light load, for example to minimize the incoming/outgoing time in a multi-story parking lot.

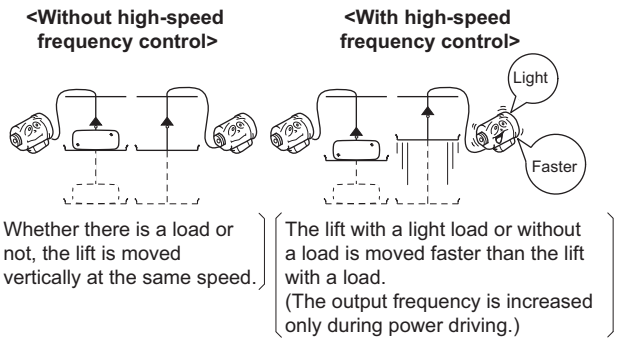

Pr.	Name	Initial value FM	Initial value CA	Setting range	Description
4 D301	**Multi-speed setting (high speed)**	60 Hz	50 Hz	0 to 590 Hz	Set the higher-speed frequency.
5 D302	**Multi-speed setting (middle speed)**	30 Hz		0 to 590 Hz	Set the lower-speed frequency.
270 A200	**Stop-on contact/load torque high-speed frequency control selection**	0		0	Normal operation
				1	Stop-on-contact control (Refer to page 462.)
				2	Load torque high-speed frequency control
				3	Stop-on-contact (refer to page 462) + load torque high- speed frequency control
				11	Stop-on-contact control (E.OLT invalid under stop-on-contact control)
				13	Stop-on-contact + load torque high-speed frequency control (Refer to page 462.) (E.OLT invalid under stop-on-contact control)
271 A201	**High-speed setting maximum current**	50%		0 to 400%	Set the upper and lower limits of the current at high and middle speeds.
272 A202	**Middle-speed setting minimum current**	100%		0 to 400%	
273 A203	**Current averaging range**	9999		0 to 590 Hz	Set the average current during acceleration from (**Pr.273** × 1/2) Hz to (**Pr.273**) Hz.
				9999	Set the average current during acceleration from (**Pr.5** × 1/2) Hz to (**Pr.5**) Hz.
274 A204	**Current averaging filter time constant**	16		1 to 4000	Set the time constant of the primary delay filter relative to the output current. (The time constant [ms] is 0.5 × **Pr.274**, and the initial value is 8 ms.) A larger setting results in a stable operation with poorer response.

上正科技有限公司
購買、維修 此手冊零組件
電話： 037-466333
Email: service@repairtw.com
Line id: @zzzz
www.repairtw.com

(1) Connection diagram

- Sink logic
- **Pr.186** = 19

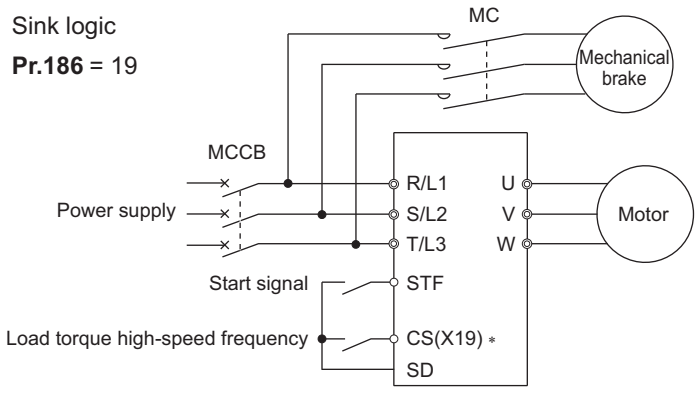

* The applied terminals differ by the settings of **Pr.180 to Pr.189 (input terminal function selection)**.

(2) Load torque high speed frequency control setting

- Set "2, 3 or 13" in **Pr.270 Stop-on contact/load torque high-speed frequency control selection**.
- When the load torque high-speed frequency selection (X19) signal ON, the inverter automatically adjusts the maximum frequency in the range between the **Pr.4 Multi-speed setting (high speed)** and **Pr.5 Multi-speed setting (middle speed)** in accordance with the average current in the current averaging range. The current averaging range is from the 1/2 the **Pr.5** to the full **Pr.5** setting (in the current averaging range).
- To use the X19 signal, set "19" in any of **Pr.178 to Pr.189 (input terminal function selection)** to assign the function to an input terminal.
- This is valid in External operation mode and Network operation mode.
- The control can be activated at every start.

(3) Operation of load torque high-speed frequency control

- When the average current of the current averaging range (chart A below) during operation with the X19 signal ON is the "rated inverter current × **Pr.271** setting (%)" or less, the maximum frequency automatically becomes the **Pr.4 Multi-speed setting (high speed)** setting value.
- When the average current of the current averaging range (chart B below) during operation with the X19 signal ON is greater than the "rated inverter current × **Pr.272** setting (%)", the maximum frequency automatically becomes the **Pr.5 Multi-speed setting (middle speed)** setting value.
- During regeneration load operation, the **Pr.5** setting is the maximum frequency regardless of the average current.
- When **Pr.273** is used, the current averaging range can be set between one half of the frequency of the **Pr.273** setting value and the **Pr.273** set frequency. (However, the setting value must be smaller than **Pr.5** setting.)

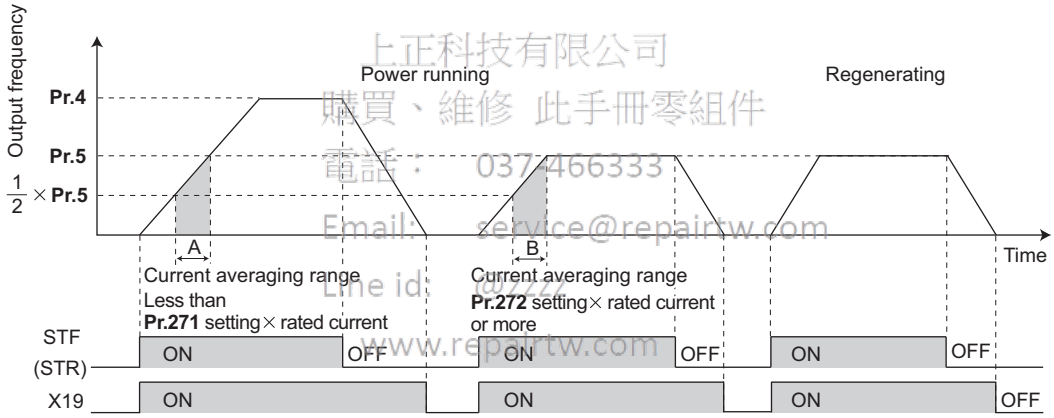

上正科技有限公司
購買、維修 此手冊零組件
電話： 037-466333
Email: service@repairtw.com
Line id: @zzzz
www.repairtw.com

- When the average current is larger than "rated inverter current × **Pr.271** setting (%)" and smaller than "rated inverter current × **Pr.272** setting (%)", linear compensation is performed as shown below.

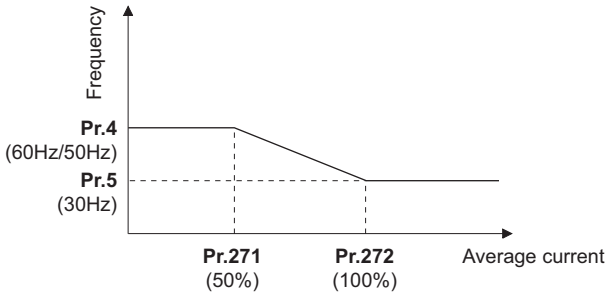

Value in parenthesis is initial value.

REMARKS

- When the current averaging range includes the constant-output range, the output current may become large in the constant-output range.
- When the average current value in the current averaging range is small, deceleration time becomes longer as the running frequency increases.
- The automatic restart after instantaneous power failure function, fast-response current limit operation, fast-response current limit operation, shortest acceleration/deceleration, and optimum acceleration/deceleration are invalid.
- Changing the terminal assignment with **Pr.178 to Pr.189 (input terminal function selection)** may affect other functions. Set parameters after confirming the function of each terminal.
- Under the following operating conditions, the load torque high-speed frequency function is invalid:
  PU operation (**Pr.79**), PU + External operation (**Pr.79**), JOG operation (JOG signal), PID control function operation (X14 signal), remote setting function operation (**Pr.59**), orientation control function operation, multi-speed setting (RH, RM, RL signal), torque control, position control.
- When the average current during acceleration is too small, it may be judged as regeneration, and the maximum frequency may become the setting of **Pr.5.**
- The output frequency may change due to the load, so do not get unnecessarily close to the motor or machine.

♦ Parameters referred to ♦

Pr.4 to Pr.6, Pr.24 to Pr.27 (multi-speed setting) ☞page 319
Pr.57 Restart coasting time ☞page 511, page 517
Pr.59 Remote function selection ☞page 288
Pr.79 Operation mode selection ☞page 299
Pr.128 PID action selection ☞page 483
Pr.178 to Pr.189 (input terminal function selection) ☞page 416

5.14.6 Traverse function

上正科技有限公司
購買、維修 此手冊零組件
電話： 037-466333
Email: service@repairtw.com
Line id: @zzzz
www.repairtw.com

The traverse operation, which oscillates the frequency at a constant cycle, is available.

Pr.	Name	Initial value	Setting range	Description
592 A300	**Traverse function selection**	0	0	Traverse function invalid
			1	Traverse function valid only in External operation mode
			2	Traverse function valid regardless of the operation mode
593 A301	**Maximum amplitude amount**	10%	0 to 25%	Level of amplitude during traverse operation
594 A302	**Amplitude compensation amount during deceleration**	10%	0 to 50%	Compensation amount during amplitude inversion (from acceleration to deceleration)
595 A303	**Amplitude compensation amount during acceleration**	10%	0 to 50%	Compensation amount during amplitude inversion (from deceleration to acceleration)
596 A304	**Amplitude acceleration time**	5 s	0.1 to 3600 s	Time period of acceleration during traverse operation
597 A305	**Amplitude deceleration time**	5 s	0.1 to 3600 s	Time period of deceleration during traverse operation

(A) Application parameters

- Setting **Pr.592 Traverse function selection** = "1 or 2" will enable the traverse function.
- Assigning the Traverse function selection (X37) signal to the input terminal will enable the traverse function only when the X37 signal is ON. (When the X37 signal is not assigned, the traverse function is always available.) To input the X37 signal, set "37" in any of **Pr.178 to Pr.189 (input terminal function selection)** to assign the function to a terminal.

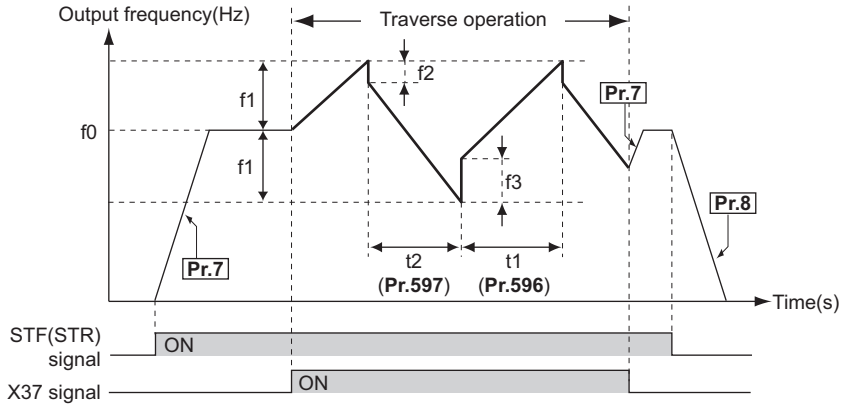

f0: set frequency
f1: amplitude amount from the set frequency (f0 × **Pr.593**/100)
f2: compensation amount at transition from acceleration to deceleration (f1 × **Pr.594**/100)
f3: compensation amount at transition from deceleration to acceleration (f1 × **Pr.595**/100)
t1: time from acceleration during traverse operation (Time from (f0 – f1) to (f0 + f1)) (**Pr.596**)
t2: time from deceleration during traverse operation (Time from (f0 + f1) to (f0 – f1)) (**Pr.597**)

- The motor accelerates to the set frequency f0 according to the normal **Pr.7 Acceleration time** at turn ON of the start command (STF or STR).
- When the output frequency reaches f0 and the X37 signal turns ON, the inverter begins traverse operation and accelerates to f0 + f1. The acceleration time at this time is according to the **Pr.596** setting. (If the X37 signal turns ON before the output frequency reaches f0, traverse operation begins after the output frequency reaches f0.)
- After the inverter accelerates to f0 + f1, this is compensated with f2 (f1 × **Pr.594**), and the inverter decelerates to f0 - f1. The deceleration time at this time is according to the **Pr.597** setting.
- After the inverter decelerates to f0 - f1, this is compensated with f3 (f1 × **Pr.595**), and the inverter accelerates again to f0 + f1.
- When the X37 signal turns OFF during traverse operation, the inverter accelerates/decelerates to f0 according to the normal acceleration/deceleration time (**Pr.7, Pr.8**). If the start command (STF or STR) is turned OFF during traverse operation, the inverter decelerates to a stop according to the normal deceleration time (**Pr.8**).

上正科技有限公司
購買、維修 此手冊零組件
電話：037-466333
Email: service@repairtw.com
Line id: @zzz
www.repairtw.com

REMARKS

- If the set frequency (f0) and traverse operation parameters (**Pr.598 to Pr.597**) are changed during traverse operation, this is applied in operations after the output frequency reaches f0 before the change was made.
- If the output frequency exceeds **Pr.1 Maximum frequency** or **Pr.2 Minimum frequency** during traverse operation, the output frequency is clamped at the maximum/minimum frequency when the set pattern exceeds the maximum/minimum frequency.
- When the traverse function and S-pattern acceleration/deceleration (**Pr.29** ≠ "0") are selected, S-pattern acceleration/deceleration operation occurs only in the range operated at the normal acceleration/deceleration time (**Pr.7, Pr.8**). Acceleration/deceleration during traverse operation is performed linearly.
- If stall prevention activates during traverse operation, traverse operation stops and normal operation begins. When stall prevention operation is completed, the inverter accelerates/decelerates to f0 at the normal acceleration/deceleration time (**Pr.7, Pr.8**). After the output frequency reaches f0, the traverse operation begins again.
- If the value of the amplitude inversion compensation amount (**Pr.594, Pr.595**) is too large, an overvoltage trip or stall prevention occurs, and pattern operation cannot be performed as set.
- Changing the terminal assignment using **Pr.178 to Pr.189 (input terminal function selection)** may affect the other functions. Set parameters after confirming the function of each terminal.

♦ Parameters referred to ♦

Pr.3 Base frequency ☞page 578
Pr.180 to Pr.186 (input terminal function selection) ☞page 416
Pr.190 to Pr.195 (output terminal function selection) ☞page 370

5.14.7 Vibration contarol Sensorless Vector

When an object is moved by a gantry crane, vibration is suppressed on the crane's traveling axis.

Pr.	Name	Initial value	Setting range	Description
1072 A310	**DC brake judgment time for vibration control operation**	3 s	0 to 10 s	Set the waiting time to start the DC injection brake (zero speed control, servo lock) after the output frequency reaches the **Pr.10 DC injection brake operation frequency** or lower.
1073 A311	**Vibration control operation selection**	0	0	Vibration control disabled
			1	Vibration control enabled
1074 A312	**Vibration suppression frequency**	1 Hz	0.05 to 3 Hz	Sets the vibration frequency of the load.
			9999	A vibration frequency is estimated based on the **Pr.1077** to **Pr.1079** settings, and vibration control is performed.
1075 A313	**Vibration suppression depth**	0	0 to 3	00 (Deep) → 3 (Shallow)
1076 A314	**Vibration suppression width**	0	0 to 3	0 (Narrow) → 3 (Wide)
1077 A315	**Rope length**	1 m	0.1 to 50 m	Set the rope length of the crane.
1078 A316	**Trolley weight**	1 kg	1 to 50000 kg	Set the weight of the trolley.
1079 A317	**Load weight**	1 kg	1 to 50000 kg	Set the weight of the load.

上正科技有限公司
購買、維修 此手冊零組件
電話： 037-460393
Email: service@repairtw.com
Line id: @zzzz
www.repairtw.com

(1) Vibration control operation (Pr.1073)

- Setting **Pr.1073 Vibration control operation selection** = "1" enables vibration control. Vibration control is available under speed control of Real sensorless vector control or vector control. (Vibration control is not available under zero speed or servo lock control.)
- During operation under vibration control, the travel distance becomes longer. Input a stop command earlier to avoid a collision with an obstacle.
- Deceleration stop without vibration control is applied for stopping as a result of PU stop, an emergency stop command input from a communication option, **Pr.875 Fault definition**, or an emergency stop input (X92).

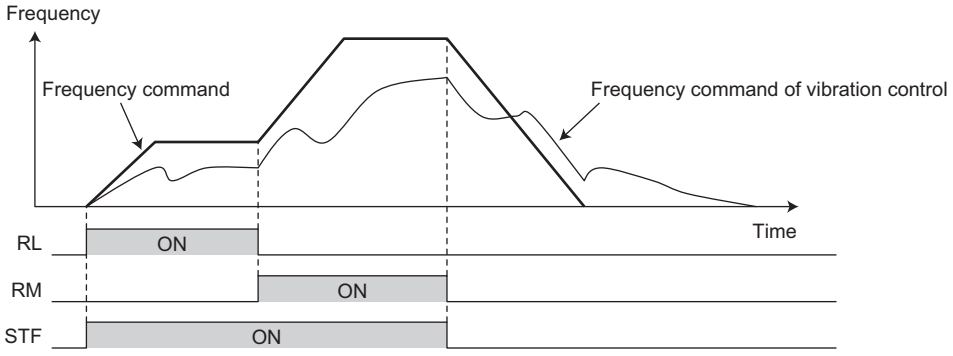

(A) Application parameters

(2) Vibration frequency setting (Pr.1074 to Pr.1079)

- Set a vibration frequency in **Pr.1074 Vibration suppression frequency**. The vibration frequency is used as a notch filter frequency. Lower the response level of speed control in the frequency band with the width set in the **Pr.1076 Vibration suppression width** by the gain set in the **Pr.1075 Vibration suppression depth**.
- A deeper notch depth has a greater effect in reducing mechanical resonance, but because the phase delay is larger, vibration may increase. Adjust by starting from the shallowest value.

Setting value	3	2	1	0
Depth	Shallow	→	←	Deep
Gain	-4dB	-8dB	-14dB	-∞

- If the **Pr.1076** setting is too large (the width is too wide), the response level of speed control will drop, and the system may become unstable.
- After setting **Pr.1074** = "9999", set the crane rope length in the **Pr.1077 Rope length**, the trolley weight in the **Pr.1078 Trolley weight**, and the weight of an object in the **Pr.1079 Load weight**. Then, vibration control is performed using a vibration frequency estimated by the inverter.

(3) Waiting time for brake operation of vibration control (Pr.1072)

- Set the time from when the output frequency becomes the **Pr.10 DC injection brake operation frequency** or less to when the zero speed control or the servo lock operation starts in the **Pr.1072 DC brake judgment time for vibration control operation**.

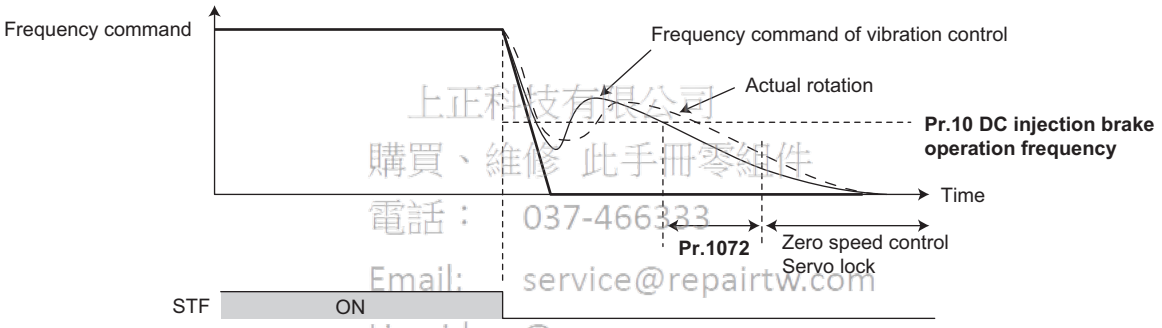

上正科技有限公司
購買、維修 此手冊零組件
電話： 037-466333
Email: service@repairtw.com
Line id: @zzzz
www.repairtw.com

REMARKS

- During vibration control operation, even if the motor rotation is restricted to one direction in the **Pr.78 Reverse rotation prevention selection**, the motor may rotate in a direction opposite to the setting.
- A protective function (E.OSD) may be activated during vibration control. When using vibration control, set **Pr.690 Deceleration check time** = "9999 (initial value)" to disable the deceleration check function.
- When vibration control is enabled, regeneration avoidance, shortest acceleration/deceleration, and the traverse function are disabled.
- Do not set vibration control and droop control together.

♦ Parameters referred to ♦

Pr.10 DC injection brake operation frequency ☞page 584
Pr.78 Reverse rotation prevention selection ☞page 314
Pr.286 Droop gain ☞page 605
Pr.292 Automatic acceleration/deceleration ☞page 293
Pr.592 Traverse function selection ☞page 467
Pr.690 Deceleration check time ☞page 202
Pr.875 Fault definition ☞page 328
Pr.882 Regeneration avoidance operation selection ☞page 599

5.14.8 Orientation control V/F Magnetic flux Vector

The inverter can adjust the stop position (Orientation control) using a position detector (encoder) attached to a place such as the main shaft of the machine.
Option FR-A8AP is required.
Because **Pr.350 Stop position command selection** is initially set to "9999", the orientation control function is invalid.

Pr.	Name	Initial value	Setting range	Description	
350 A510	**Stop position command selection**	9999	0	Internal stop position command **(Pr.356)**	
			1	External stop position command (FR-A8AX 16-bit data)	
			9999	Orientation control invalid	
351 A526	**Orientation speed**	2 Hz	0 to 30 Hz	Turning ON the X22 signal decelerates the motor speed to the set value.	
352 A527	**Creep speed**	0.5 Hz	0 to 10 Hz	After the speed reaches the orientation speed, the speed decreases to the creep speed set in **Pr.352** as soon as the current position pulse reaches the creep switchover position set in **Pr.353**.	
353 A528	**Creep switchover position**	511	0 to 16383		
354 A529	**Position loop switchover position**	96	0 to 8191	As soon as the current position pulses reach the set position loop switchover position, control is changed to the position loop.	
355 A530	**DC injection brake start position**	5	0 to 255	After the motor moves into the position loop, the motor stops by the DC injection brake when the current position pulses reach the specified start position of the DC injection brake.	
356 A531	**Internal stop position command**	0	0 to 16383	When "0" is set in **Pr.350**, the internal position command is activated and the setting value of **Pr.356** becomes the stop position.	
357 A532	**Orientation in-position zone**	5	0 to 255	Set the in-position width at a stop of the orientation.	
358 A533	**Servo torque selection**	1	0 to 13	Operation at orientation completion can be selected.	
359 C141	**Encoder rotation direction**	0	0	Set when using a motor for which forward rotation (encoder) is clockwise (CW) viewed from the shaft 	Set for the operation at 120 Hz or less.
			100		Set for the operation at a frequency higher than 120 Hz.
		1	1	Set when using a motor for which forward rotation (encoder) is counterclockwise (CCW) viewed from the shaft 	Set for the operation at 120 Hz or less.
			101		Set for the operation at a frequency higher than 120 Hz.
360 A511	**16-bit data selection**	0	0	Speed command	When **Pr.350** = "1" is set and the FR-A8AX is mounted together, set the stop position using 16-bit data. Stop position command is input as binary regardless of the **Pr.304** setting.
			1	16-bit data is used as the external position command as is.	
			2 to 127	Set the stop position by dividing up to 128 stop positions.	
361 A512	**Position shift**	0	0 to 16383	Shift the home position using a compensation value without changing the home position of the encoder. The stop position is a position obtained by adding the setting of **Pr.361** to the position command.	
362 A520	**Orientation position loop gain**	1	0.1 to 100	When the servo torque function is selected using **Pr.358**, the output frequency for generating servo torque gradually increases to the creep speed of **Pr.352** according to the slope set in **Pr.362**. Although the operation becomes faster when the value is increased, hunting may occur in the machine.	
363 A521	**Completion signal output delay time**	0.5 s	0 to 5 s	The orientation complete signal turns ON after going into the in-position width and waiting for the set time. Also, the signal turns OFF after going out of the in-position width and waiting for the set time.	
364 A522	**Encoder stop check time**	0.5 s	0 to 5 s	If the orientation complete signal (ORA) has never been output and the encoder stays stopped for the set time without completing orientation, the orientation fault signal (ORM) is output. If the ORA signal has been output before but the orientation cannot be completed within the set time, the ORM signal is also output.	

上正科技有限公司
購買、維修 此手冊零組件
電話： 037-466333
Email: service@repairtw.com
Line id: @zzzz
www.repairtw.com

(A) Application parameters

Pr.	Name	Initial value	Setting range	Description
365 A523	**Orientation limit**	9999	0 to 60 s	The time elapses after passing the creep switchover position is measured. If orientation cannot be completed within the set time, the orientation fault signal (ORM) is output.
			9999	Set to 120 s.
366 A524	**Recheck time**	9999	0 to 5 s	When the start signal is turned OFF with the orientation command (X22) ON after stopping the motor by orientation control, the present position is checked again after the set time elapses, and the orientation complete signal (ORA) or orientation fault signal (ORM) is output.
			9999	Not checked.
369 C140	**Number of encoder pulses**	1024	0 to 4096	Set the number of encoder pulses. Set the number of pulses before it is multiplied by 4.
393 A525	**Orientation selection**	0	0	Orientation is executed from the current rotation direction.
			1	Orientation is executed from the forward rotation direction.
			2	Orientation is executed from the reverse rotation direction.
396 A542	**Orientation speed gain (P term)**	60	0 to 1000	Response level during position control loop (servo rigidity) can be adjusted at orientation stop.
397 A543	**Orientation speed integral time**	0.333	0 to 20 s	
398 A544	**Orientation speed gain (D term)**	1	0 to 100	Lag/advance compensation gain can be adjusted.
399 A545	**Orientation deceleration ratio**	20	0 to 1000	Make adjustment when the motor runs back at orientation stop or the orientation time is long.

The parameters above are available be set when FR-A8AP (option) is mounted.

上正科技有限公司
購買、維修 此手冊零組件
電話： 037-466333
Email: service@repairtw.com
Line id: @zzzz
www.repairtw.com

(1) Connection example

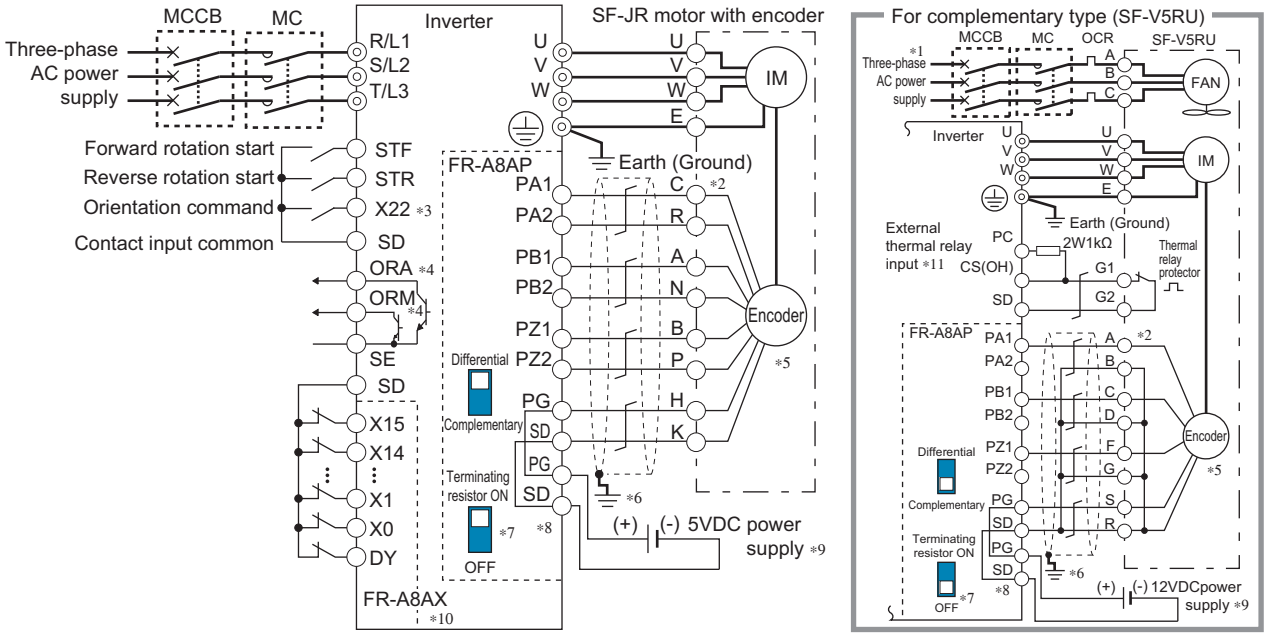

*1 The power supply of the fan for a 7.5 kW or lower dedicated motor is single phase. (200 V/50 Hz, 200 to 230 V/60 Hz)

*2 The pin number differs according to the encoder used.

*3 Use **Pr.178 to Pr.189 (input terminal function selection)** to assign the function to a terminal. (Refer to page 416.)

*4 Use **Pr.190 to Pr.196 (output terminal function selection)** to assign the function to a terminal. (Refer to page 370.)

*5 Connect the encoder so that there is no looseness between the motor and motor shaft. Speed ratio must be 1:1.

*6 Connect the shield of the encoder cable to the enclosure using a tool such as a P-clip. (Refer to page 67.)

*7 For the differential line driver, set the terminating resistor selection switch to the ON position (initial status) to use. (Refer to page 63.)
Note that the terminating resistor switch should be set to the OFF position when sharing the same encoder with another unit (NC, etc.) or when the terminating resistor is connected to another unit. For the complementary, set the switch to the OFF position.

*8 For terminal compatibility of FR-JCBL, FR-V5CBL and FR-A8AP, refer to page 65.

*9 A separate power supply of 5 V/12 V/15 V/24 V is necessary according to the encoder power specification. Make the voltage of the external power supply same as the encoder output voltage, and connect the external power supply between PG and SD. When performing encoder feedback control and vector control together, an encoder and power supply can be shared.

*10 When a stop position command is input from outside, a plug-in option FR-A8AX is required. Refer to page 474 for the external stop position command.

*11 Connect the recommended 2W1kΩ resistor between the terminal PC and OH. (Recommended product: MOS2C102J 2W1kΩ by KOA Corporation)
Insert the input line and the resistor to a 2-wire blade terminal, and connect the blade terminal to the terminal OH. (For the recommended 2-wire blade terminals, refer to page 51.)
Insulate the lead wire of the resistor, for example by applying a contraction tube, and shape the wires so that the resistor and its lead wire will not touch other cables. Caulk the lead wire securely together with the thermal protector input line using a 2-wire blade terminal. (Do not subject the lead wire's bottom area to an excessive pressure.)
To use a terminal as the terminal OH, assign the OH (external thermal O/L relay input) signal to an input terminal. (Set "7" in any of **Pr.178 to Pr.189**. For details, refer to the Instruction Manual (Detailed) of the inverter.)

When OH signal is assigned to terminal RH
(**Pr.182** = "7")

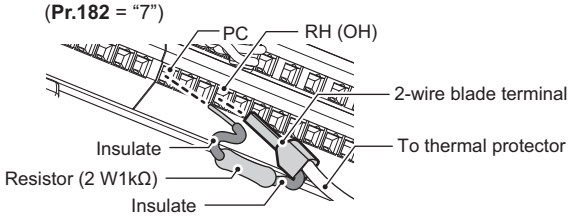

Line Id: @2222
www.repairtw.com

(2) Setting

- If the orientation command signal (X22) is turned ON during operation after the various parameters have been set, the speed will decelerate to the "orientation switchover speed". After the "orientation stop distance" is calculated, the speed will further decelerate, and the "orientation state" (servo lock) will be entered. The "orientation complete signal" (ORA) will be output when the "orientation complete width" is entered.

(3) Setting I/O signals

Signal	Signal name	Description
X22	Orientation command	Use a terminal to input the orientation signal that commands orientation. For the X22 signal input, set "22" in any of **Pr.178 to Pr.189** to assign the function.
ORA	Orientation complete	Output switches to Low if the orientation stop has made within the orientation complete width while the start and X22 signals are input. For the ORA signal output, set "27 (positive logic)" or "127 (negative logic)" in any of **Pr.190 to Pr.196**.
ORM	Orientation fault	Output switches to Low if the orientation not stop has made within the orientation complete width while the start and X22 signals are input. For the ORM signal output, set "28 (positive logic)" or "128 (negative logic)" in any of **Pr.190 to Pr.196**.

(4) Selecting stop position command (Pr.350 Stop position command selection)

- Select either to use the internal stop position command (**Pr.356 Internal stop position command**) or the external stop position command (16-bit data using the FR-A8AX).

Pr.350 setting	Stop position command source
0	Internal stop position command (**Pr.356**: 0 to 16383)
1	External stop position command (FR-A8AX) 16-bit data
9999 (Initial value)	Orientation control invalid

- When the internal stop position command (**Pr.350** = "0") is selected, the **Pr.356** setting is used as the stop position.
- When the number of encoder pulses is 1024 pulses/r, one revolution (360°) of the encoder is divided by 4096 pulses so that the degree per pulse can be calculated as 360° / 4096 pulses = 0.0879°/pulse. Refer to the figure on the right. Stop position (address) is shown within parentheses.

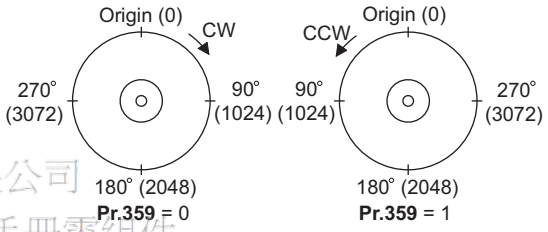

- When the external stop position command (**Pr.350** = "1") is selected while the FR-A8AX option is mounted, 16-bit data (binary input) is used to give the stop position.
- The value set in **Pr.360 16-bit data selection** should be the divided value minus 1.

上正科技有限公司
購買、維修 此手冊零組件
電話： 037-466333
Email: service@repairtw.com
Line id: @zzzz
www.repairtw.com

Pr.360 Setting	Description
0	External position command is invalid (speed command or torque command via the FR-A8AX)
1	Position command direct input The 16-bit digital signal via the FR-A8AX is the direct stop position command. <Example> When the **Pr.369 Number of encoder pulses** setting is "1024", the stop position command from "0 to 4095" can be input using FR-A8AX, and the digital signal of "2048 (H800)" is input to stop the motor at a 180° position.
2 to 127	Set the stop position command by dividing up to 128 stop positions. If the external stop command input is greater than the setting, the stop positions are the same as those in the maximum external stop command value. <Example> When the number of stop positions is 90 (divided at intervals of 4°), 90 - 1 = 89. Hence, set "89".

[Example 1] When **Pr.369** = "1024"

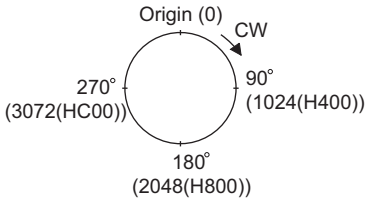

Pr.360 = "1"

[Example 2] With 8 stop positions

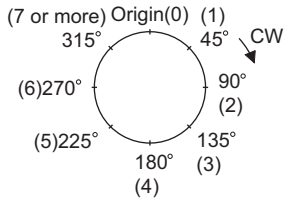

Pr.360 = "7"

[Example 3] With 120 stop positions

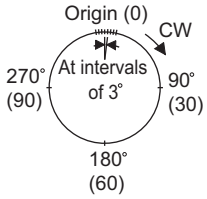

Pr.360 = "119"

REMARKS

- Values in parentheses indicate binary data input from the terminals. Even if the position pulse monitor (**Pr.52 Operation panel main monitor selection** = "19") is selected, the data monitored is not the number of stop positions but is 0 to 65535 pulses.
- FR-A8AX parameters **(Pr.300 to Pr.305)** are invalid (Valid when **Pr.360** = "0".)
- Terminal DY (data read timing input signal) becomes invalid during vector control. (The position data is downloaded at the start of orientation.)
- Internal stop position command is given when no option is mounted or **Pr.360** = "0" even if "1" (external stop position command) is set in **Pr.350**.

- Relationship between stop position command and 16-bit data

Pr.350 Stop position command selection	Pr.360 16-bit data selection	Operation status		
		Stop position command	16-bit data (FR-A8AX)	Speed command
0: internal	0: speed command	Internal **(Pr.356)**	Speed command	16-bit data
	1, 2 to 127: position command	Internal **(Pr.356)**	Invalid	External command (or PU)
1: external	0: speed command	Internal **(Pr.356)**	Speed command	16-bit data
	1, 2 to 127: position command	External (Internal when the FR-A8AX is not mounted **(Pr.356)**)	Position command	External command (or PU)

(5) Pr.361 Position shift (initial value "0")

- The stop position is a position obtained by adding the setting of **Pr.361** to the position command.
- Position shift function
  Shift the home position using a compensation value without changing the home position of the position detector (encoder).

REMARKS

- When orientation control is valid using **Pr.350 Stop position command selection** with the FR-A8AP (option) mounted, the rotation direction of the encoder is displayed on the rotation direction display of the PU (FR-DU08/FR-PU07).
  Make settings so that FWD is displayed at turn ON of the STF signal and REV is displayed at turn ON of the STR signal.

(6) Monitor display change

Monitor	REMARKS
Position pulse monitor	When "19" is set in **Pr.52 Operation panel main monitor selection**, the position pulse monitor is displayed instead of the output voltage monitor of the PU. (Displayed only when the FR-A8AP (option) is mounted.)
Orientation status*1	When "22" is set in **Pr.52**, the orientation status is displayed instead of the output voltage monitor of the PU. (Displayed only when the FR-A8AP (option) is mounted.) 0: Other than orientation operation or orientation speed is not reached 1: Orientation speed is reached 2: Creep speed is reached 3: Position loop is reached 4: Orientation complete 5: Orientation fault (pulse stop) 6: Orientation fault (orientation limit) 7: Orientation fault (recheck) 8: Continuous multi-point orientation

*1 Invalid during vector control. ("0" is always displayed.)

(7) Pr.357 Orientation in-position zone (initial value "5")

- The in-position width for orientation stop can be set.
  The initial value of **Pr.357** is "5". To change the Δθ value, make fine adjustments by changing in increments of ±10.
- If the position detection value from the encoder enters ±Δθ during orientation stop, the Orientation complete signal (ORA) will be output.

Operation example

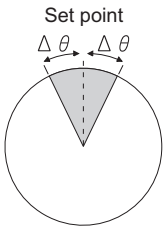

$$\Delta\theta = \frac{360^\circ}{\frac{\textbf{Pr.369}}{\text{Number of encoder pulses}} \times 4 \text{ times}} \times \textbf{Pr.357}$$

(8) Orientation from the running status (under V/F control, Advanced magnetic flux vector control)

1)When the orientation command (X22) turns on, the motor speed decreases to the **Pr.351 Orientation speed**. (**Pr.351** initial value: 2Hz)

2)After the speed reaches the orientation speed, the speed further decreases to the **Pr.352 Creep speed** as soon as the current position pulse reaches the **Pr.353 Creep switchover position**. (**Pr.352** is initially set to "0.5 Hz", **Pr.353** is initially set to "511")

3)Moreover, as soon as the current position pulse reaches the **Pr.354 Position loop switchover position**, control is changed to the position loop. (**Pr.354** is initially set to "96")

4)After the motor moves into the position loop, the motor decelerates and stops by the DC injection brake as soon as the current position pulse reaches the **Pr.355 DC injection brake start position**. (**Pr.355** is initially set to "5")

5)When the motor stops in **Pr.357 Orientation in-position zone**, the orientation complete (ORA) signal is output after **Pr.363 Completion signal output delay time**. If the motor does not stop within the in-position width because of external force, etc., the ORA signal turns OFF after the time set in **Pr.363**. (**Pr.357** is initially set to "5", **Pr.363** is initially set to "0.5 s")

6)If the orientation is not completed continuously in **Pr.365 Orientation limit** after passing the creep switchover position, the orientation fault signal (ORM) is output.

7)After the orientation start, if the motor is stopped by external force, etc. before reaching the in-position width and therefore the ORA signal has not been output, the ORM signal is output after the **Pr.364 Encoder stop check time**.If the motor is moved out of the in-position width by external force, etc. after the ORA signal has been output once, the ORA signal turns OFF after the set time in **Pr.363**. If the orientation is not completed within the time set in **Pr.364**, the ORM signal is output.

8)If the ORA and ORM signals have been output once, but the start signal (STF or STR) is turned OFF while the X22 signal is ON, the ORA or ORM signal will be output again after **Pr.366 Recheck time**.

9)The ORA and ORM signals cannot be output while the X22 signal is OFF.

REMARKS

- When the orientation command turns OFF while the start signal is ON, the speed accelerates to the command speed.

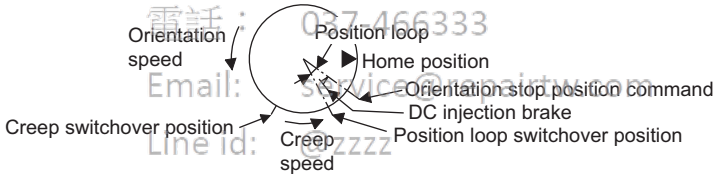

- If hunting of the motor shaft occurs during orientation stop, set a larger value in **Pr.354** or a smaller value in **Pr.352** to prevent it.

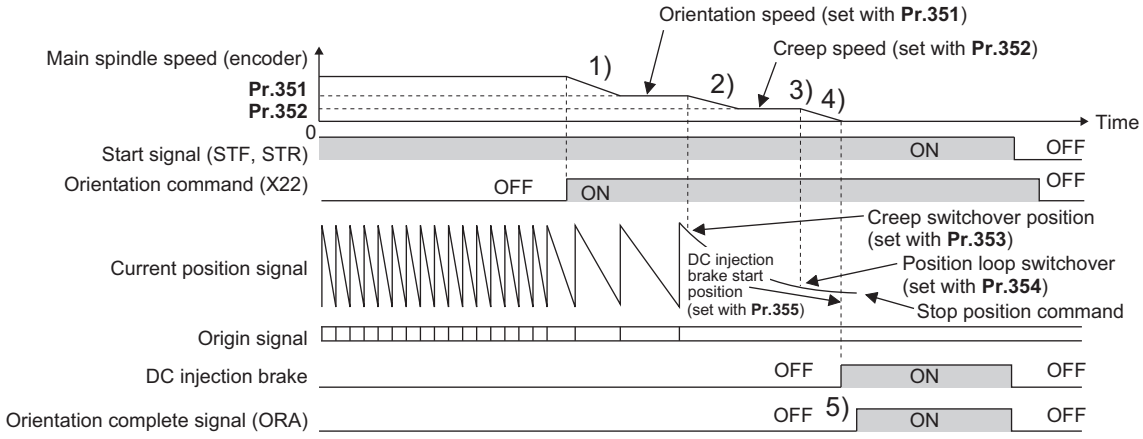

上正科技有限公司
購買、維修 此手冊零組件
電話： 037-466333
Email: service@spaintw.com
Line id: @zzzz
www.spaintw.com

(9) Orientation from the stop status (V/F control, Advanced magnetic flux vector control)

- Turning ON the start signal after turning ON the orientation command (X22) will increase the motor speed to the **Pr.351 Orientation speed**, and then orientation operation will be performed with the same operation as for "orientation from the running status".
- Note that the DC injection brake operates without increasing to the orientation speed if the position signal is within the DC injection brake start position.

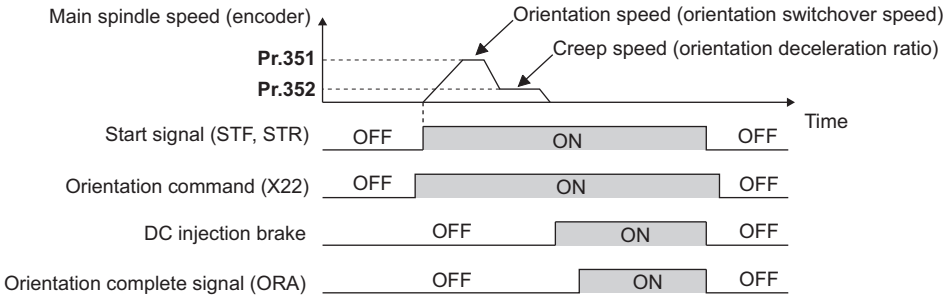

(10) Continuous multi-point orientation (V/F control, Advanced magnetic flux vector control)

- Orientation command and orientation with STF/STR ON. (Orientation in servo-in status)

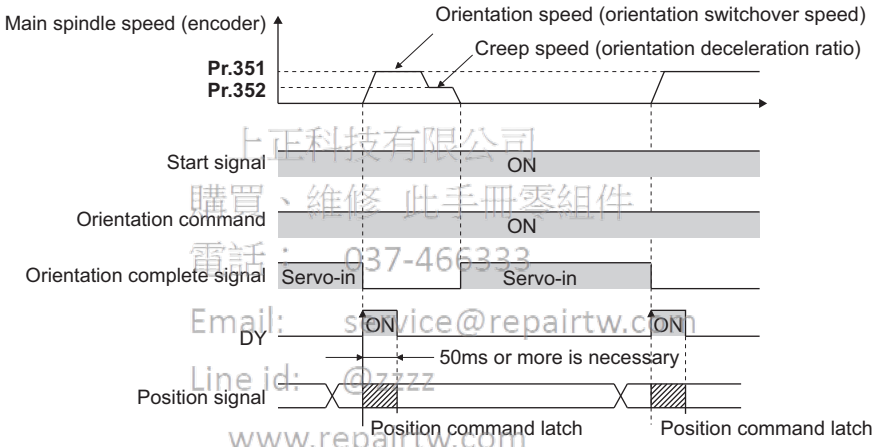

上正科技有限公司
購買、維修 此手冊零組件
電話： 037-466333
Email: service@repairtw.com
Line id: @zzzz
www.repairtw.com

- The position data is read at the rising edge of DY. (For the details, refer to **the Instruction Manual of FR-A8AX**).
- When the position signal is within the creep switchover position, the speed starts up to the creep speed not to the orientation speed.
- When the position signal is outside the creep switchover position, the speed starts up to the orientation speed.
- The DC injection brake operates if the position signal is within the DC injection brake start position.
- 16-bit data with the FR-A8AX is valid only when the DY signal is ON.

REMARKS

- Couple the encoder with the motor shaft or with the shaft that stops the main shaft at the specified position. Couple it with the speed ratio of 1:1 and without any mechanical looseness.
- The DC injection brake operates at orientation stop. Release the DC injection brake as soon as possible (within several seconds), as continuous operation of the DC injection brake will cause the motor to overheat, leading to burnout.
- Because the servo lock function is not available after orientation stop, provide a holding mechanism, such as a mechanical brake or knock pin, when secure holding of the main shaft is required.
- To ensure correct positioning, the encoder must be set in the proper rotation direction, and the A and B phases must be connected correctly.
- If the pulse signal from the encoder stops due to encoder signal loss, etc. during orientation, the Orientation fault (ORM) signal may be output.
- When performing orientation control, enable the DC injection brake. (Refer to page 584.) When the DC injection brake is disabled, orientation operation cannot be completed.
- When orientation control is performed, the DC injection brake operates regardless of the External DC injection brake operation start (X13) signal even when **Pr.11 DC injection brake operation time** = "8888" (DC injection brake external selection).
- To terminate orientation, the start signal (STF or STR) must be first switched OFF, and then the X22 signal must be switched OFF. As soon as this X22 signal is switched OFF, orientation control ends. (Depending on the **Pr.358 Servo torque selection** setting, the orientation status continues if the X22 signal remains ON even if the DC injection brake is released by turning OFF the start signal. Because of this, the orientation status on the monitor does not show "0".
- When the retry function of **Pr.358 Servo torque selection** is selected, the retry operation is performed three times including the first orientation.
- When performing orientation control, properly set **Pr.350 Stop position command selection** and **Pr.360 16-bit data selection** (external position command selection). If the values are set incorrect, proper orientation control will not be performed.
- When orientation control is performed, PID control is disabled.

(11) Servo torque selection (Pr.358) (V/F control, Advanced magnetic flux vector control)

Function and description	Operation for each Pr.358 setting														REMARKS
	0	1	2	3	4	5	6	7	8	9	10	11	12	13	
a. Servo torque function until output of the orientation complete signal (ORA)	×	○	○	○	○	×	○	×	○	×	○	×	×	○	○: With servo torque function ×: Without servo torque function
b. Retry function	×	×	×	×	×	×	×	○	×	×	×	○	×	×	○: With retry function ×: Without retry function
c. Output frequency compensation when the motor stops outside the in-position zone	×	×	○	○	×	○	○	×	×	×	×	×	○	○	○: With frequency compensation ×: Without frequency compensation
d. DC injection brake and servo torque when the motor exits the in-position zone after output of the orientation complete signal (ORA)	○	×	×	×	×	○	○	○	○	○	○	○	○	○	○: DC injection brake enabled ×: Servo torque enabled
e. End switch for the DC injection brake and orientation complete signal (ORA)	○	○	○	×	×	○	○	○	○	×	×	×	×	×	○: When the start signal (STF, STR) or orientation command is turned OFF ×: When the orientation command is turned OFF
f. Complete signal when the motor exits the in-position zone after output of the orientation complete signal (ORA)	○	○	○	○	○	×	×	×	×	×	×	×	×	×	○: Turns OFF the complete signal when the motor exits the in-position zone ×: Complete signal remains ON even if the motor exits the in-position zone (orientation fault signal (ORM) is not output)

REMARKS

- When the orientation command turns OFF while the start signal is ON, the motor accelerates to the command speed.
- When the motor shaft stops outside of the set setting range of the stop position, the motor shaft is returned to the stop position by the servo torque function (if enough torque is generated).

三菱科技有限公司 購買維修諮詢操作 電話：037-466833 Email: service@repairtw.com Line id: @zzz2 www.repairtw.com

a.Servo torque function until output of the orientation complete signal

Select whether or not servo torque is available using **Pr.358 Servo torque selection**. Servo torque is not generated if the current position pulse is in between the orientation stop position and DC injection brake start position. The shaft is fixed using the DC injection brake, and when the motor exits the width by external force, etc., the servo torque is generated to move the motor back within the width. Once the orientation complete (ORA) signal is output, the operation is performed as described in d.

b.Retry function

Select retry function using **Pr.358**. Note that the retry function cannot be used together with the servo torque function. If the motor shaft does not stop within the in-position zone when the motor stop is checked, orientation operation is performed again by the retry function. This retry function is performed three times including the first orientation.The maximum retry number is three. (The orientation fault (ORM) signal is not output during retry operation.)

c.Frequency compensation when the motor stops outside the orientation complete width

When the motor stops before entering the in-position width due to external force, etc., the output frequency is increased to move the shaft to the orientation stop position. The output frequency is gradually increased to the **Pr.352 Creep speed**. This function cannot be used with the retry function.

d.DC injection brake and servo torque selection when the position pulse exits the in-position zone after output of the ORA signal

If the motor exits the in-position width, select the setting either to fix the shaft with the DC injection brake or by returning the motor to the orientation stop position with the servo torque.

e.End switch for the DC injection brake and orientation complete signal (ORA)

When ending the orientation operation, first turn OFF the start signal (STF or STR), and then turn OFF the X22 signal. At this time, select when to turn OFF the ORA signal from either the time the start signal is turned OFF or the time the orientation command signal is turned OFF.

f.Complete signal when the motor exits the in-position zone after output of the orientation complete signal (ORA)

Select to turn OFF the ORA signal or to keep the ORA signal ON (ORM signal is not output) when the motor exits the in-position width.

上正科技有限公司
購買 維修 此手冊零組件
電話： 037-466333
Email: service@repairtw.com
Line Id: @2222
www.repairtw.com

(12) Position loop gain (Pr.362) (V/F control, Advanced magnetic flux vector control)

- When the servo torque function is selected using **Pr.358 Servo torque selection**, the output frequency for generating servo torque gradually increases to the **Pr.352 Creep speed** according to the slope set in **Pr.362 Orientation position loop gain**.
- Although the operation becomes faster when the value is increased, a machine may hunt, etc.

(13) Description of orientation operation (Vector control)

- Setting the rotation direction (**Pr.393 Orientation selection**)

Pr.393 setting	Rotation direction	Remarks
0 (initial value)	Pre-orientation	Orientation is executed from the current rotation direction.
1	Forward rotation orientation	Orientation is executed from the forward rotation direction. (If the motor is running in reverse, orientation is executed from the forward rotation direction after deceleration.)
2	Reverse rotation orientation	Orientation is executed from the reverse rotation direction. (If the motor is running forward, orientation is executed from the reverse rotation direction after deceleration.)

(14) Orientation from the current rotation direction (Pr.393 = "0 (initial value)") (Vector control)

- When the orientation command (X22) is input, the motor speed will decelerate from the running speed to **Pr.351 Orientation speed**. At the same time, the orientation stop position command will be read in. (The stop position command is determined by the setting of **Pr.350 Stop position command selection** and **Pr.360 16-bit data selection**. Refer to the right chart.)
- When the orientation switchover speed is reached, the encoder Z phase pulse will be confirmed, and the control will change from speed control to position control (**Pr.362 Orientation position loop gain**).
- The distance to the orientation stop position is calculated at switching of the control, and the motor decelerates to a stop with a set deceleration pattern (**Pr.399 Orientation deceleration ratio**) and enters the orientation (servo lock) state.
- Once in the **Pr.357 Orientation in-position zone**, the orientation complete (ORA) signal is output.
- The home position can be moved using **Pr.361 Position shift**.

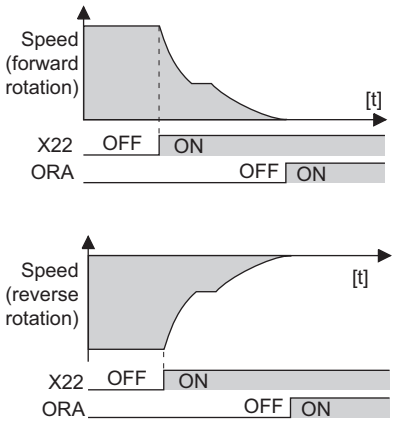

上昇科技有限公司
購買、維修 此手冊零組件
電話： 037-466333
Email: service@repairtw.com
Line id: @622
www.repairtw.com

⚠ WARNING

⚠ If the X22 is turned OFF while the start signal is input, the motor will accelerate toward the speed of the current speed command. Therefore, to stop, turn the forward rotation (reverse rotation) signal OFF.

(15) Orientation from the forward rotation direction (Pr.393 = "1") (Vector control)

- This method is used to improve the stopping precision and maintain the mechanical precision when the backlash is large.
- If the motor is running in the forward rotation direction, it will make an orientation stop with the same method as "orientation from the current rotation direction".
- If the motor is running in reverse, it will decelerate, change to the forward rotation direction, and then orientation stop will be executed.

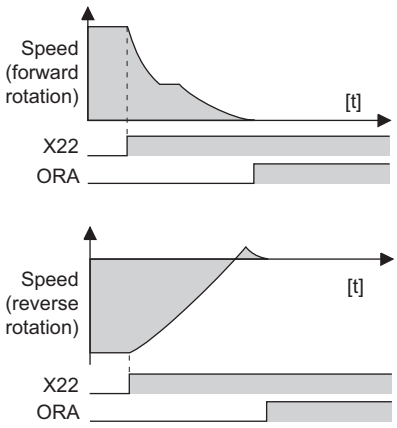

(16) Orientation from the reverse rotation direction (Pr.393 = "2") (Vector control)

- If the motor is running in the reverse rotation direction, it will make an orientation stop with the same method as "orientation from the current rotation direction".
- If the motor is running in forward, it will decelerate, change to the reverse rotation direction, and then orientation stop will be executed.

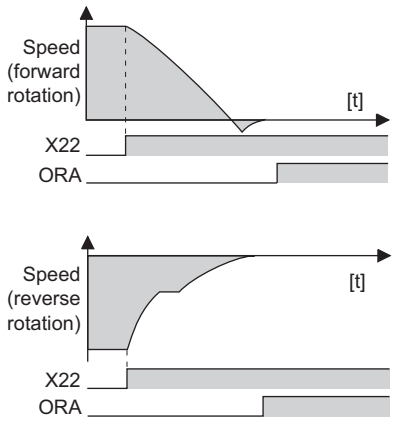

REMARKS

- Couple the encoder with the motor shaft that stops the shaft at the specified position. Couple it with the speed ratio of 1:1 and without any mechanical looseness.
- To ensure correct positioning, the encoder must be set in the proper rotation direction, and the A and B phases must be connected correctly.
- If the pulse signal from the encoder stops due to encoder signal loss, etc. during orientation, orientation may not be completed.
- To terminate orientation, the start signal (STF or STR) must be first switched OFF, and then the orientation signal (X22) must be switched OFF. As soon as this orientation signal is switched OFF, orientation control ends.
- When performing orientation control, properly set **Pr.350 Stop position command selection** and **Pr.360 16-bit data selection**. If the values set are incorrect, proper orientation control will not be performed.
- When orientation control is performed, PID control is disabled.
- If Signal loss detection(E.ECT) is displayed when the X22 signal is ON, causing the inverter to trip, check for a break in the cable of the Z phase of the encoder.

上研科技有限公司
購買、維修 此手冊零組件
電話： 037-466333
Email: service@repairtw.com
Line id: @zzzz
www.repairtw.com

(17) Servo rigidity adjustment (Pr.362, Pr.396 to Pr.398) (Vector control)

- To increase the servo rigidity*1 during orientation stop using **Pr.396 Orientation speed gain (P term)** or **Pr.397 Orientation speed integral time**, adjust with the following procedures.

  1)Increase the **Pr.362 Orientation position loop gain** value to the extent that rocking*2 does not occur during orientation stop.

  2)Increase **Pr.396 and Pr.397** at the same rate.

  Normally, adjust **Pr.396** in the range from 10 to 100, and **Pr.397** from 0.1 to 1.0 s.

  (Note that these do not need to be set to the same rate.)

  <Example>

  When the **Pr.396** value is multiplied by 1.2, divide the **Pr.397** value by 1.2.

  If vibration occurs during orientation stop, the scale cannot be raised any higher.

  3)**Pr.398 Orientation speed gain (D term)** is the lag/advance compensation gain.

  The limit cycle*3 can be prevented by increasing the value, and operation can be stopped stably. However, the torque will decrease in relation to the position deviation, and the motor will stop with deviation.

*1 Servo rigidity: This is the response when a position control loop is configured.
When the servo rigidity is raised, the holding force will increase and operation will stabilize, but vibration will more easily occur.
When the servo rigidity is lowered, the holding force will decrease, and the settling time will increase.

*2 Rocking: Movement in which return occurs when the stopping position is exceeded.

*3 Limit cycle: This is a phenomenon that generates ± continuous vibration centering on the target position.

POINT

Application of lag/advance control and PI control

PI control can be applied by setting **Pr.398** to 0. Normally, use the lag/advance control. PI control should be used when using a machine with a high spindle static friction torque and requires a stop position accuracy.

(A) Application parameters

(18) Pr.399 Orientation deceleration ratio (initial value: 20) (Vector control)

- Make adjustments, as shown below, according to the orientation status. (Make adjustments in the order of a, b, and c.) Normally, adjust **Pr.362 Orientation position loop gain** in the range from 5 to 20, and **Pr.399 Orientation deceleration ratio** from 5 to 50.

Condition	Adjustment procedure
Rocking occurs during stopping	a. Decrease the **Pr.399** setting. b. Decrease the **Pr.362** setting. c. Increase the **Pr.396** and **Pr.397** settings.
The orientation time is long.	a. Increase the **Pr.399** setting. b. Increase the **Pr.362** setting.
Hunting occurs during stopping	a. Decrease the **Pr.362** setting. b. Decrease the **Pr.396** setting and increase the **Pr.397** setting.
Low servo rigidity during stopping	a. Increase the **Pr.396** setting and decrease the **Pr.397** setting. b. Increase the **Pr.362** setting.

REMARKS

Orientation stop operation will fail, causing an excessive position error, or if the motor performs forward/reverse reciprocation operation (↻), review the settings of **Pr.393 Orientation selection** (on page 472) and **Pr.359 Encoder rotation direction** (on page 471).

(19) Pr.351 Orientation speed (initial value: 2 Hz) (Vector control)

- Set the speed when switching between the speed control mode and the position control mode is performed under orientation operation.
  Decreasing the set speed enables stable orientation stop. Note that the orientation time will increase.

上正科技有限公司
購買、維修 此手冊零組件
電話： 037-466333
Email: service@repairtw.com
Line id: @zzzz
www.repairtw.com

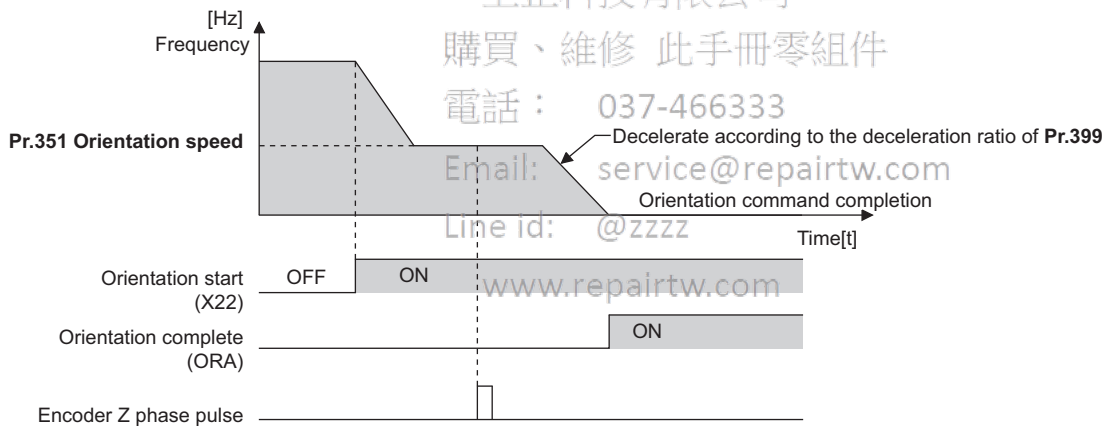

REMARKS

- When "19" is set in **Pr.52 Operation panel main monitor selection**, the position pulse monitor is displayed instead of the output voltage monitor on the PU.

5.14.9 PID control

Process control such as flow rate, air volume or pressure are possible on the inverter.
A feedback system can be configured and PID control can be performed using the terminal 2 input signal or parameter setting value as the set point, and the terminal 4 input signal as the feedback value.

Pr.	Name	Initial value	Setting range	Description
127 A612	**PID control automatic switchover frequency**	9999	0 to 590 Hz	Set the value at which control is automatically switched to PID control.
			9999	Without PID control automatic switchover function
128 A610	**PID action selection**	0	0, 10, 11, 20, 21, 50, 51, 60, 61, 70, 71, 80, 81, 90, 91, 100, 101, 1000, 1001, 1010, 1011, 2000, 2001, 2010, 2011	Select how to input the deviation value, measured value and set point, and forward and reverse action.
			40 to 43	Refer to page 503.
129 A613	**PID proportional band**	100%	0.1 to 1000%	If a narrow proportional band is set (small parameter setting value), the manipulated amount changes considerably by slight changes in the measured value. As a result, response improves as the proportional band becomes narrower, though stability worsens as shown by the occurrence of hunting. Gain Kp=1/proportional band
			9999	Without proportional band
130 A614	**PID integral time**	1 s	0.1 to 3600 s	With deviation step input, this is the time (Ti) used for obtaining the same manipulated amount as proportional band (P) by only integral (I) action. Arrival to the set point becomes quicker the shorter an integral time is set, though hunting is more likely to occur.
			9999	Without integral control
131 A601	**PID upper limit**	9999	0 to 100%	Sets the upper limit. The FUP signal is output when the feedback value exceeds this setting. The maximum input (20 mA/5 V/10 V) of the measured value (terminal 4) is equivalent to 100%.
			9999	No function
132 A602	**PID lower limit**	9999	0 to 100%	Set the lower limit. The FDN signal is output when the measured value falls below the setting range. The maximum input (20 mA/5 V/10 V) of the measured value (terminal 4) is equivalent to 100%.
			9999	No function
133 A611	**PID action set point**	9999	0 to 100%	Set the set point during PID control.
			9999	Set point set by **Pr.128**.
134 A615	**PID differential time**	9999	0.01 to 10 s	With deviation ramp input, this is the time (Td) used for obtaining the manipulated amount only by proportional action (P). Response to changes in deviation increase greatly as the differential time increases.
			9999	Without differential control
553 A603	**PID deviation limit**	9999	0 to 100%	The Y48 signal is output when the absolute value of the deviation exceeds the deviation limit value.
			9999	No function
554 A604	**PID signal operation selection**	0	0 to 3, 10 to 13	The action when the upper or lower limit for a measured value input is detected or when a limit for the deviation is detected can be selected. The operation for PID output suspension function can be selected.
575 A621	**Output interruption detection time**	1 s	0 to 3600 s	If the status where the output frequency after PID calculation is less than the **Pr.576** setting is continuously the **Pr.575** set time or more, inverter running is suspended.
			9999	Without output interruption function
576 A622	**Output interruption detection level**	0 Hz	0 to 590 Hz	Set the frequency at which output interruption is performed.

上正科技有限公司
購買、維修 此手冊零組件
電話： 037-466333
Email: service@repairtw.com
Line id: @zzzz
www.repairtw.com

(A) Application parameters

Pr.	Name	Initial value	Setting range	Description	
577 A623	**Output interruption cancel level**	1000%	900 to 1100%	Level at which the PID output suspension function is released. Set "**Pr.577** -1000%".	
609 A624	**PID set point/deviation input selection**	2	1	Input of set point, deviation value from terminal 1	
			2	Input of set point, deviation value from terminal 2	
			3	Input of set point, deviation value from terminal 4	
			4	Input of set point, deviation value via CC-Link communication	
			5	Input of set point, deviation value by PLC function	
610 A625	**PID measured value input selection**	3	1	Input of measured value from terminal 1	
			2	Input of measured value from terminal 2	
			3	Input of measured value from terminal 4	
			4	Input of measured value via CC-Link communication	
			5	Input of measured value by sequence function	
753 A650	**Second PID action selection**	0	0, 10, 11, 20, 21, 50, 51, 60, 61, 70, 71, 80, 81, 90, 91, 100, 101, 1000, 1001, 1010, 1011, 2000, 2001, 2010, 2011	Refer to **Pr.128**.	Set the second PID control. For how to enable the second PID control, refer to page 494.
754 A652	**Second PID control automatic switchover frequency**	9999	0 to 600 Hz, 9999	Refer to **Pr.127**.	
755 A651	**Second PID action set point**	9999	0 to 100%, 9999	Refer to **Pr.133**.	
756 A653	**Second PID proportional band**	100	0.1 to 1000%, 9999	Refer to **Pr.129**.	
757 A654	**Second PID integral time**	1 s	0.1 to 3600 s, 9999	Refer to **Pr.130**.	
758 A655	**Second PID differential time**	9999	0.01 to 10 s, 9999	Refer to **Pr.134**.	
1140 A664	**Second PID set point/ deviation input selection**	2	1 to 5	Refer to **Pr.609**.	
1141 A665	**Second PID measured value input selection**	3	1 to 5	Refer to **Pr.610**.	
1143 A641	**Second PID upper limit**	9999	0 to 100%, 9999	Refer to **Pr.131**.	
1144 A642	**Second PID lower limit**	9999	0 to 100%, 9999	Refer to **Pr.132**.	
1145 A643	**Second PID deviation limit**	9999	0 to 100%, 9999	Refer to **Pr.553**. (Y205 signal is output.)	
1146 A644	**Second PID signal operation selection**	0	0 to 3, 10 to 13	Refer to **Pr.554**.	
1147 A661	**Second output interruption detection time**	1 s	0 to 3600 s, 9999	Refer to **Pr.575**.	
1148 A662	**Second output interruption detection level**	0 Hz	0 to 600 Hz	Refer to **Pr.576**.	
1149 A663	**Second output interruption cancel level**	1000%	900 to 1100%	Refer to **Pr.577**.	

上正科技有限公司
購買、維修、手冊零組件
電話：037-466833
Email: service@repairtw.com
Line id: @zzzz
www.repairtw.com

(1) Basic configuration of PID control

- **Pr.128** ="10, 11" (deviation value signal input)

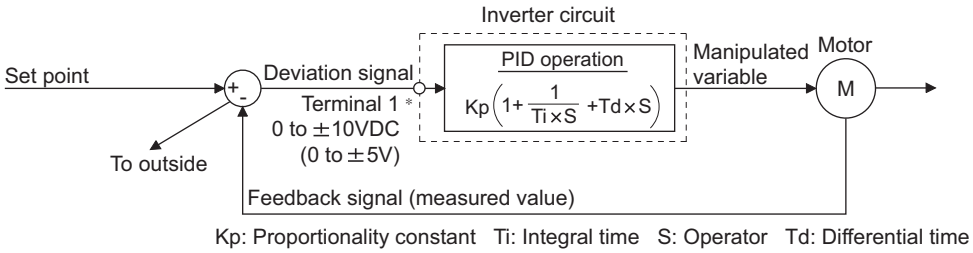

*Set "0" to **Pr.868** Terminal 1 function assignment. When **Pr.868** ≠ "0", PID control is invalid.

- **Pr.128** = "20, 21" (measured value input)

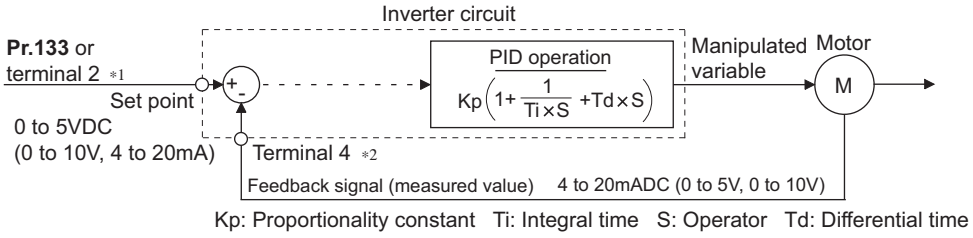

*1Note that the input of terminal 1 is added to the set point of terminal 2 as a set point.

*2Set "0" to **Pr.858 Terminal 4 function assignment**. When **Pr.858** ≠ "0", PID control is invalid.

(2) PID action outline

- PI action

PI action is a combination of proportional action (P) and integral action (I), and applies a manipulated amount according to the size of the deviation and transition or changes over time.

[Example of action when the measured value changes in a stepped manner]

(Note) PI action is the result of P and I actions being added together.

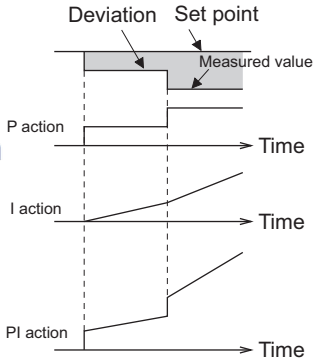

上正科技有限公司
購買、維修 此手冊零組件
電話： 037-466333
Email: service@repairtw.com
Line Id: @zzzz
www.repairtw.com

- PD action

PD action is a combination of proportional action (P) and differential action (D), and applies a manipulated amount according to the speed of the deviation to improve excessive characteristics.

[Example of action when the measured value changes proportionately]

(Note) PD action is the result of P and D actions being added together.

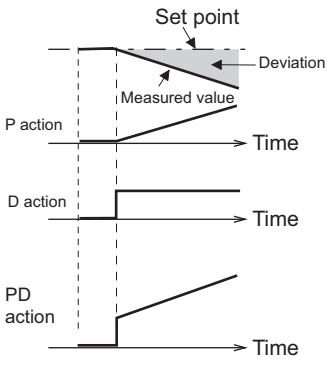

(A) Application parameters

• PID action

PID action is a combination of PI and PD action, which enables control that incorporates the respective strengths of these actions.

(Note) PID action is the result of all P, I and D actions being added together.

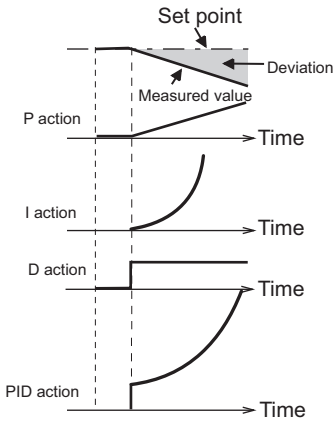

• Reverse action

When deviation X = (set point - measured value) is a plus value, the manipulated amount (output frequency) is increased, and when the deviation is a minus value, the manipulated amount is decreased.

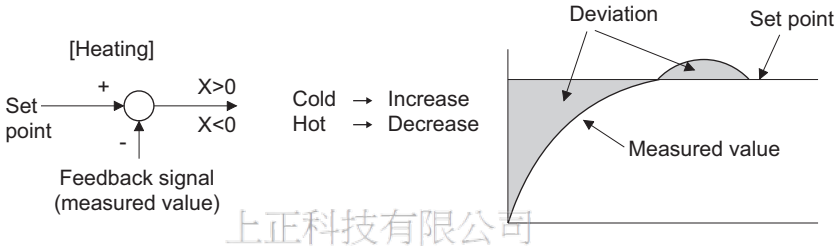

上正科技有限公司
購買、維修 此手冊零組件
電話： 037-466333
Email: service@repairtw.com
Line id: @zzzz
www.repairtw.com

• Forward action

When deviation X = (set point - measured value) is a minus value, the manipulated amount (output frequency) is increased, and when the deviation is a plus value, the manipulated amount is decreased.

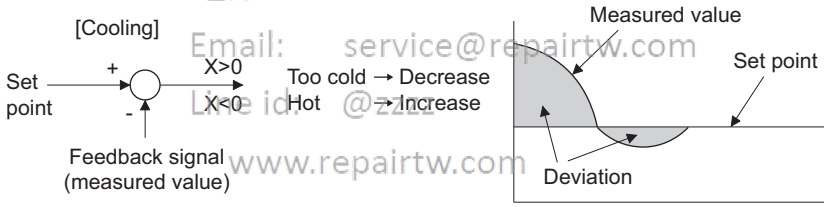

Relationship between deviation and manipulated amount (output frequency)

PID action setting	Deviation	
	Plus	Minus
Reverse action	↗	↘
Forward action	↘	↗

(3) Connection diagram

•Sink logic

•**Pr.128**=20

•**Pr.183**=14

•**Pr.191**=47

•**Pr.192**=16

•**Pr.193**=14

•**Pr.194**=15

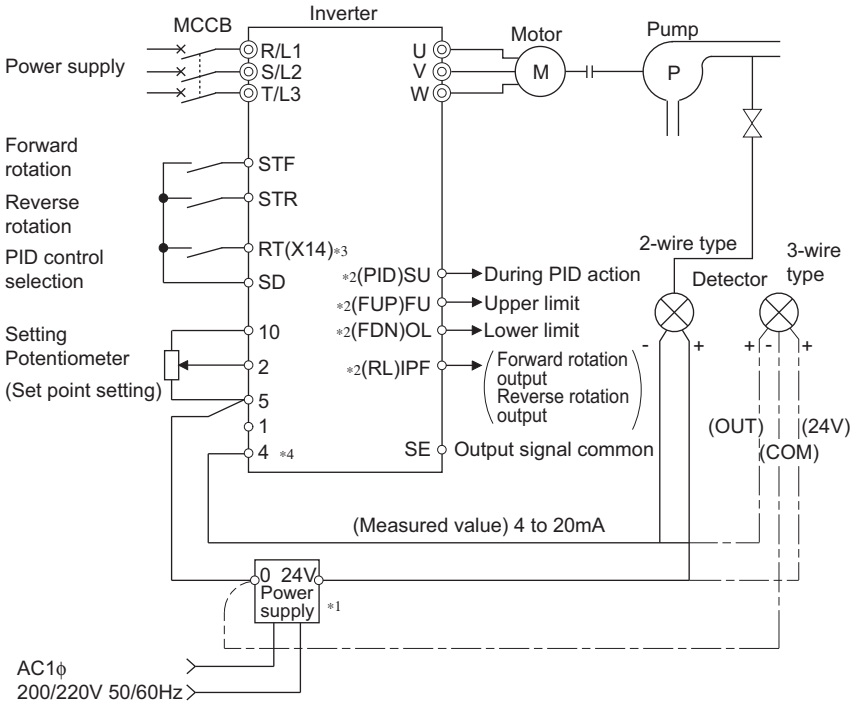

*1 Prepare a power supply matched to the power supply specification of the detector.

*2 The output signal terminal to be used differs according to the **Pr.190 to Pr.196 (output terminal function selection)** setting.

*3 The input signal terminal to be used differs according to the **Pr.178 to Pr.189 (input terminal function selection)** setting.

*4 The AU signal need not be input.

上正科技有限公司
購買、維修 此手冊零組件
電話： 037-466333
Email: service@repairtw.com
Line id: @zzz
www.repairtw.com

(4) Selection of deviation value, measured value and set point input method, and PID action method (Pr.128, Pr.609, Pr.610)

- Using **Pr.128**, select the input method for the PID set point, measured value detected by the meter, and externally calculated deviation. Also, select forward or reverse action.
- Switch the power voltage/current specifications of terminals 2 and 4 by **Pr.73 Analog input selection** or **Pr.267 Terminal 4 input selection** to match the specification of the input device. After changing the **Pr.73 and Pr.267** settings, check the voltage/current input selection switch. Incorrect setting may cause a fault, failure or malfunction. (Refer to **page 391** for the setting.)

Pr.128 setting	Pr.609 Pr.610	PID action	Set point input	Measured value input	Deviation input
0	Invalid	PID invalid	-	-	-
10		Reverse action	-	-	Terminal 1
11		Forward action			
20		Reverse action	Terminal 2 or **Pr.133** *1	Terminal 4	-
21		Forward action			
40 to 43	Valid	Dancer control	For details on dancer control, refer to **page 503**		
50	Invalid	Reverse action	-	-	CC-Link communication*2
51		Forward action			
60		Reverse action	CC-Link communication*2	CC-Link communication*2	-
61		Forward action			
70		Reverse action	-	-	PLC function (with frequency reflected)
71		Forward action			
80		Reverse action	PLC function (with frequency reflected)*3	PLC function (with frequency reflected)*3	-
81		Forward action			
90		Reverse action	-	-	PLC function (without frequency reflected)*3
91		Forward action			
100		Reverse action	PLC function (without frequency reflected)*3	PLC function (without frequency reflected)*3	-
101		Forward action			

(A) Application parameters

Pr.128 setting	Pr.609 Pr.610	PID action	Set point input	Measured value input	Deviation input
1000	Valid	Reverse action	According to **Pr.609** *1	According to **Pr.610**	-
1001		Forward action			
1010		Reverse action	-	-	According to **Pr.609**
1011		Forward action			
2000		Reverse action (without frequency reflected)	According to **Pr.609** *1	According to **Pr.610**	-
2001		Forward action (without frequency reflected)			
2010		Reverse action (without frequency reflected)	-	--	According to **Pr.609**
2011		Forward action (without frequency reflected)			

*1 When **Pr.133** ≠ "9999", the **Pr.133** setting is valid.

*2 For the details of CC-Link communication, refer to the Instruction Manual of the option FR-A8NC, FR-A8NCE.

*3 For the details of the PLC function, refer to the FR-A800 PLC Function Programming Manual.

- The set point/deviation input method can also be flexibly selected by **Pr.609 PID set point/deviation input selection** and the measured value input method can be selected by **Pr.610 PID measured value input selection**. Selection by **Pr.609 and Pr.610** is valid when **Pr.128** = "1000 to 2011".

Pr.609 and Pr.610 settings	Input method
1	Terminal 1*4
2	Terminal 2*4
3	Terminal 4*4
4	CC-Link communication
5	PLC function

*4 When the same input method has been selected for the set point and measured value using **Pr.609** and **Pr.610**, set point input is invalid. (The inverter runs at set point 0%)

上正科技有限公司
購買、維修 此手冊零組件
電話： 037-466333
Email: service@repairtw.com
Line id: @zzzz
www.repairtw.com

REMARKS

- When terminals 2 and 4 are selected for deviation input, perform bias calibration using C3 and C6 to prevent a minus voltage from being entered as the deviation input signal. Input of a minus voltage might damage devices and the inverter.

- The following shows the relationship between the input values of the analog input terminals and set point, measured value and deviation. (Calibration parameter initial values)

Input terminal	Inspect specification*5	Relationship with analog input			Calibration parameter
		Set point	Result	Deviation	
Terminal 2	0 to 5 V	0 V=0% 5 V=100%	0 V=0% 5 V=100%	0 V=0% 5 V=100%	**Pr.125, C2 to C4**
	0 to 10 V	0 V=0% 10 V=100%	0 V=0% 10 V=100%	0 V=0% 10 V=100%	
	0 to 20 mA	0 mA=0% 20 mA=100%	0 mA=0% 20 mA=100%	0 V=0% 20 mA=100%	
Terminal 1	0 to ±5 V	-5 V to 0 V=0% 5 V=+100%	-5 V to 0 V=0% 5 V=+100%	-5 V=-100% 0 V=0% 5 V=+100%	When Pr.128 = "10", **Pr.125, C2 to C4.** When **Pr.128** ≥ "1000", **C12 to C15.**
	0 to ±10 V	-10 V to 0 V=0% 10 V=+100%	-10 V to 0 V=0% 10 V=+100%	-10 V=-100% 0 V=0% 10 V=+100%	
Terminal 4	0 to 5 V	0 V to 1 V=0% 5 V=100%	0 Vto 1 V=0% 5 V=100%	0 V=-20% 1 V=0% 5 V=100%	**Pr.126, C5 to C7**
	0 to 10 V	0 V to 2 V=0% 10 V=100%	0 V to 2 V=0% 10 V=100%	0 V=-20% 1 V=0% 10 V=100%	
	0 to 20 mA	0 to 4 mA=0% 20 mA=100%	0 to 4 mA=0% 20 mA=100%	0 V=-20% 4 mA=0% 20 mA=100%	

*5 Can be changed by **Pr.73 and Pr.267** and the voltage/current input switch. (Refer to page 391.)

REMARKS

- Always perform calibration after changing the voltage/input specification with **Pr.73**, **Pr.267**, and the voltage/current input selection switch.

(5) Input/output signals

- Assigning the PID control valid terminal signal (X14) to the input terminal by **Pr.178 to Pr.189 (input terminal function selection)** enables PID control to be performed only when the X14 signal is turned ON. When the X14 signal is OFF, regular inverter running is performed without PID action.
- Input signal

Signal	Function	Pr.178 to Pr.189 setting	Description
X14	PID control valid terminal	14	When the signal is assigned to the input terminal, PID control is enabled when the signal is ON.
X80	Second PID control valid terminal	80	
X64	PID forward/reverse action switchover	64	PID control is switched between forward and reverse action without changing parameters by turning ON the signal.
X79	Second PID forward/reverse action switchover	79	
X72	PID integral value reset	72	Integral and differential values can be reset by turning the signal ON.
X73	Second PID P control switchover	73	

- Output signal

Signal	Function	Pr.190 to Pr.196 setting value		Description
		positive logic	negative logic	
FUP	PID upper limit	15	115	Output when the measured value signal exceeds **Pr.131 PID upper limit (Pr.1143 Second PID upper limit)**.
FUP2	Second PID upper limit	201	301	
FDN	PID lower limit	14	114	Output when the measured value signal exceeds **Pr.132 PID lower limit (Pr.1144 Second PID lower limit)**.
FDN2	Second PID lower limit	200	300	
RL	PID forward/reverse rotation output	16	116	"Hi" is output when the output display of the parameter unit is forward rotation (FWD), and "Low" is output when the display is reverse rotation (REV) and stop (STOP).
RL2	Second PID forward/ reverse rotation output	202	302	
PID	During PID control activated	47	147	Turns ON during PID control. When the PID calculation result is not reflected to the output frequency (**Pr.128** < "2000"), the PID signal turns OFF at turn OFF of the start signal. When the PID calculation result is reflected to the output frequency (**Pr.128** ≥ "2000"), the PID signal turns ON regardless of the start signal status during PID calculation.
PID2	Second During PID control activated	203	303	
SLEEP	PID output interruption	70	170	Set **Pr.575 Output interruption detection time (Pr.1147 Second output interruption detection time)** ≠ "9999". This signal turns ON when the PID output suspension function is activated.
SLEEP2	During second PID output shutoff	204	304	

上正科技有限公司
購買、維修 跨手冊委組件
電話： 03/4600**
Email: service@repairtw.com
Line id: @zzz**
www.repairtw.com

REMARKS

- Changing the terminal functions with **Pr.178 to Pr.189 and Pr.190 to Pr.196** may affect other functions. Set parameters after confirming the function of each terminal.

(A) Application parameters

(6) PID automatic switchover control (Pr.127)

- The system can be started up more quickly by starting up without PID control activated.
- When **Pr.127 PID control automatic switchover frequency** is set, the startup is made without PID control until the output frequency reaches the **Pr.127** setting. Once the PID control starts, the PID control is continued even if the output frequency drops to **Pr.127** setting or lower.

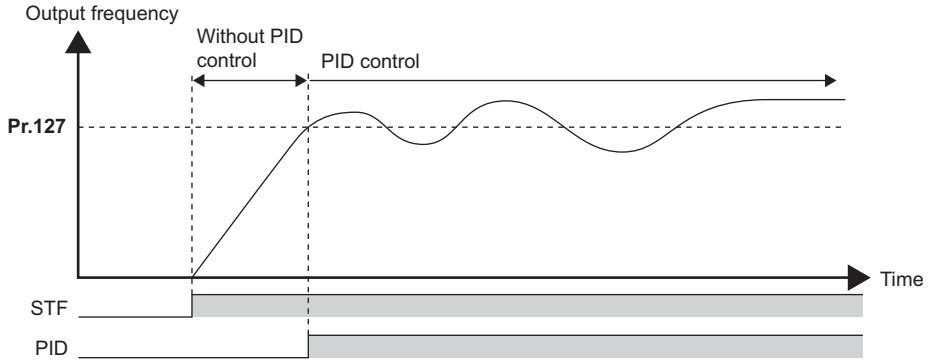

(7) Selection of action at a communication error and SLEEP function stop selection (FUP signal, FDN signal,Y48 signal, Pr.554)

- Using **Pr.554 PID signal operation selection**, set the action when the measured value input exceeds the upper limit **(Pr.131 PID upper limit)** or lower limit **(Pr.132 PID lower limit)**, or when the deviation input exceeds the permissible value **(Pr.553 PID deviation limit)**.
- Choose whether to output the signals (FUP, FDN, Y48) only or to activate the protective function to output the inverter shutoff.
- The stop action when the inverter output is shut off by the SLEEP function can be selected.

上正科技有限公司
購買、維修 此手冊零組件
電話： 037-466233
Email: service@repairtw.com
line id: @zzzz
www.repairtw.com

Pr.554 setting	Inverter operation		
	At FUP signal, FDN signal output*1	At Y48 signal output*1	At SLEEP operation start
0 (Initial value)	Signal output only	Signal output only	Coasts to stop
1	Signal output + output shutoff (E.PID)		
2	Signal output only	Signal output + output shutoff (E.PID)	
3	Signal output + output shutoff (E.PID)		
10	Signal output only	Signal output only	Deceleration stop
11	Signal output + output shutoff (E.PID)		
12	Signal output only	Signal output + output shutoff (E.PID)	
13	Signal output + output shutoff (E.PID)		

*1 When each of **Pr.131, Pr.132 and Pr.553** corresponding to each of the FUP, FDN and Y48 signals is set to "9999" (function not activated), signal output and protective function are disabled.

(8) PID output suspension function (SLEEP function) (SLEEP signal, Pr.575 to Pr.577)

- When a status where the output frequency after PID calculation is less than **Pr.576 Output interruption detection level** has continued for the time set in **Pr.575 Output interruption detection time** or longer, inverter running is suspended. This allows the amount of energy consumed in the inefficient low-speed range to be reduced.
- When the deviation (for instance, the set point - measured value) reaches the PID output shutoff release level (**Pr.577** setting value -1000%) while the PID output suspension function is activated, the PID output suspension function is released, and PID control operation is automatically restarted.
- Whether to allow motor to coast to a stop or perform a deceleration stop when SLEEP operation is started can be selected using **Pr.554**.
- While the PID output suspension function is activated, the PID output interruption signal (SLEEP) is output. During this time, the inverter running signal (RUN) turns OFF and the During PID control activated signal (PID) turns ON.
- For the terminal used for the SLEEP signal, set "70 (positive logic)" or "170 (negative logic)" in any of **Pr.190 to Pr.196 (output terminal function selection)**.

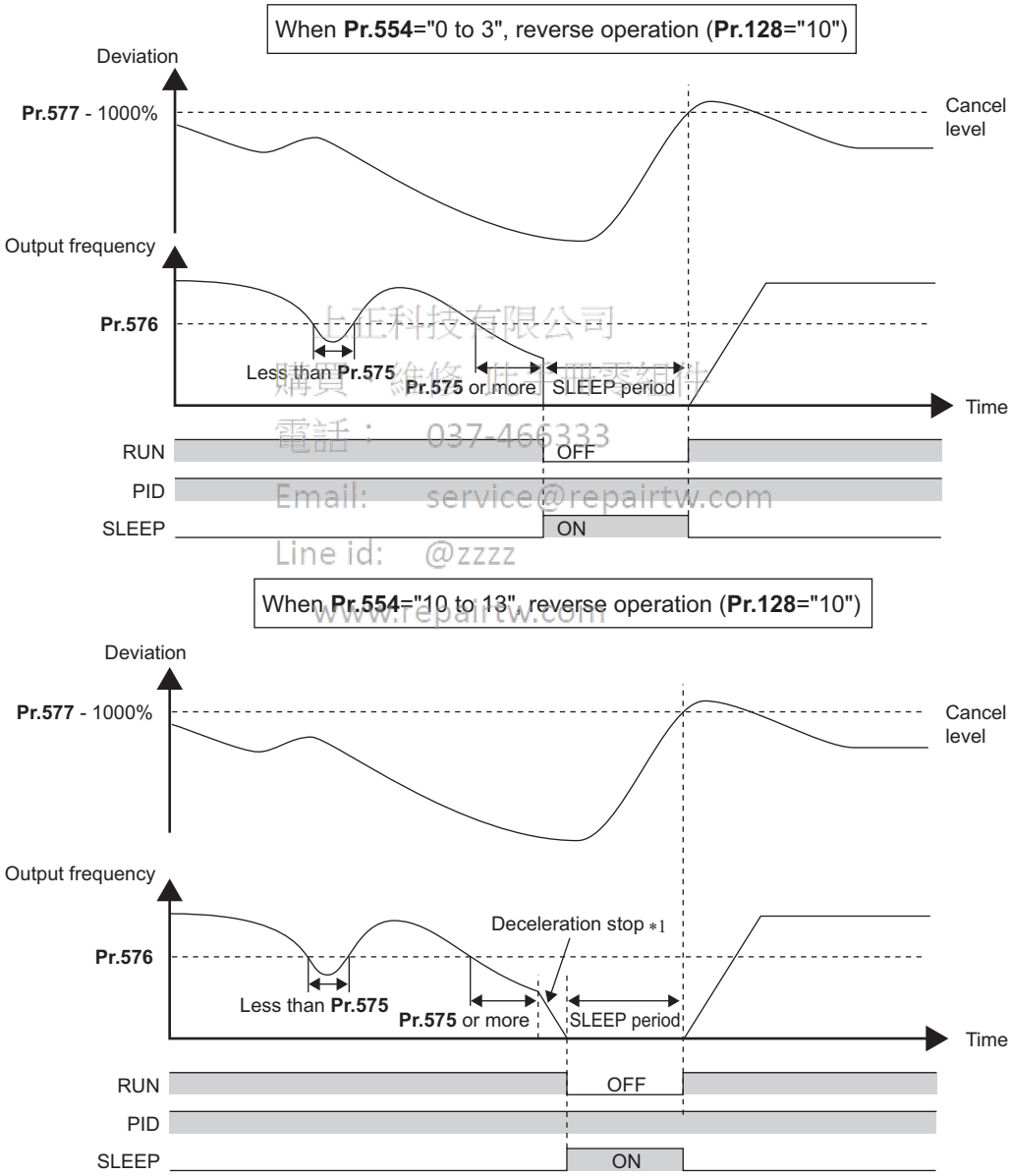

上証科技有限公司
購買、維修、出售零組件
電話： 037-466333
Email: service@repairtw.com
Line id: @zzzz
www.repairtw.com

*1 When the PID output shutoff release level is reached during a deceleration stop, output shutoff is released, operation is re-accelerated and PID control is continued. During deceleration **Pr.576 Output interruption detection level** is invalid.

(9) PID monitor function

- This function displays the PID control set point, measured value and deviation on the operation panel, and can output these from the terminals FM, AM and CA.
- An integral value indicating a negative % can be displayed on the deviation monitor. 0% is displayed as 1000. (These values cannot be output on the deviation monitor from terminals FM and CA.)
- Set the following values to **Pr.52 Operation panel main monitor selection**, **Pr.774 to Pr.776 (Operation panel monitor selection), Pr.992 Operation panel setting dial push monitor selection, Pr.54 FM/CA terminal function selection** and **Pr.158 AM terminal function selection** for each monitor.

Parameter settings	Monitor description	Minimum increment	Monitor range			Remarks
			Terminal FM/CA	Terminal AM	Operation panel	
52	PID set point	0.1%	0 to 100%*1			"0" is displayed at all times when PID control is based in deviation input.
92	Second PID set point					
53	PID measured value	0.1%	0 to 100%*1			
93	Second PID measured value					
67	PID measured value 2	0.1%	0 to 100%*1			The measured value is also displayed when PID control is invalid. "0" is displayed at all times when PID control is based in deviation input.
95	Second PID measured value 2					
54	PID deviation	0.1%	Setting not available	-100% to 100%*1*2	900% to 1100% or -100% to 100%*1	Using **Pr.290 Monitor negative output selection**, minus values can be output to the terminal AM and displayed on the operation panel (FR-DU08). Even if minus display is enabled, the display range is 900% to 1100% in monitors on the operation panel. (0% is offset and displayed as 1000%.)
94	Second PID deviation					
91	PID manipulated variable	0.1%	Setting not available	-100% to 100%*2	900% to 1100% or -100% to 100%	
96	Second PID manipulated variable					

上正科技有限公司
購買、維修 此手冊零組件
電話： 037-466333
Email: service@repairtw.com
Line id: @zzz
www.repairtw.com

*1 When **C42(Pr.934)** and **C44(Pr.935)** are set, the minimum increment changes from unit % to no unit, and the monitor range can be changed. (Refer to page 496.)

*2 When the minus value display is set disabled using **Pr.290**, the terminal AM output becomes "0".

(10) Adjustment procedure

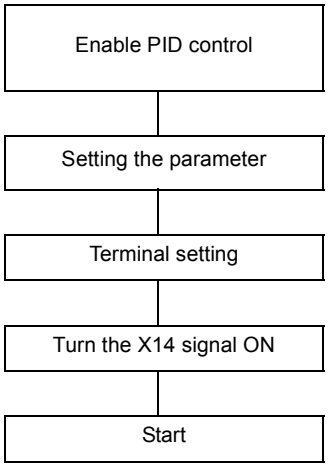

(11) Calibration example

Adjust room temperature to 25°C by PID control using a detector that outputs 4 mA at 0°C and 20 mA at 50°C.)

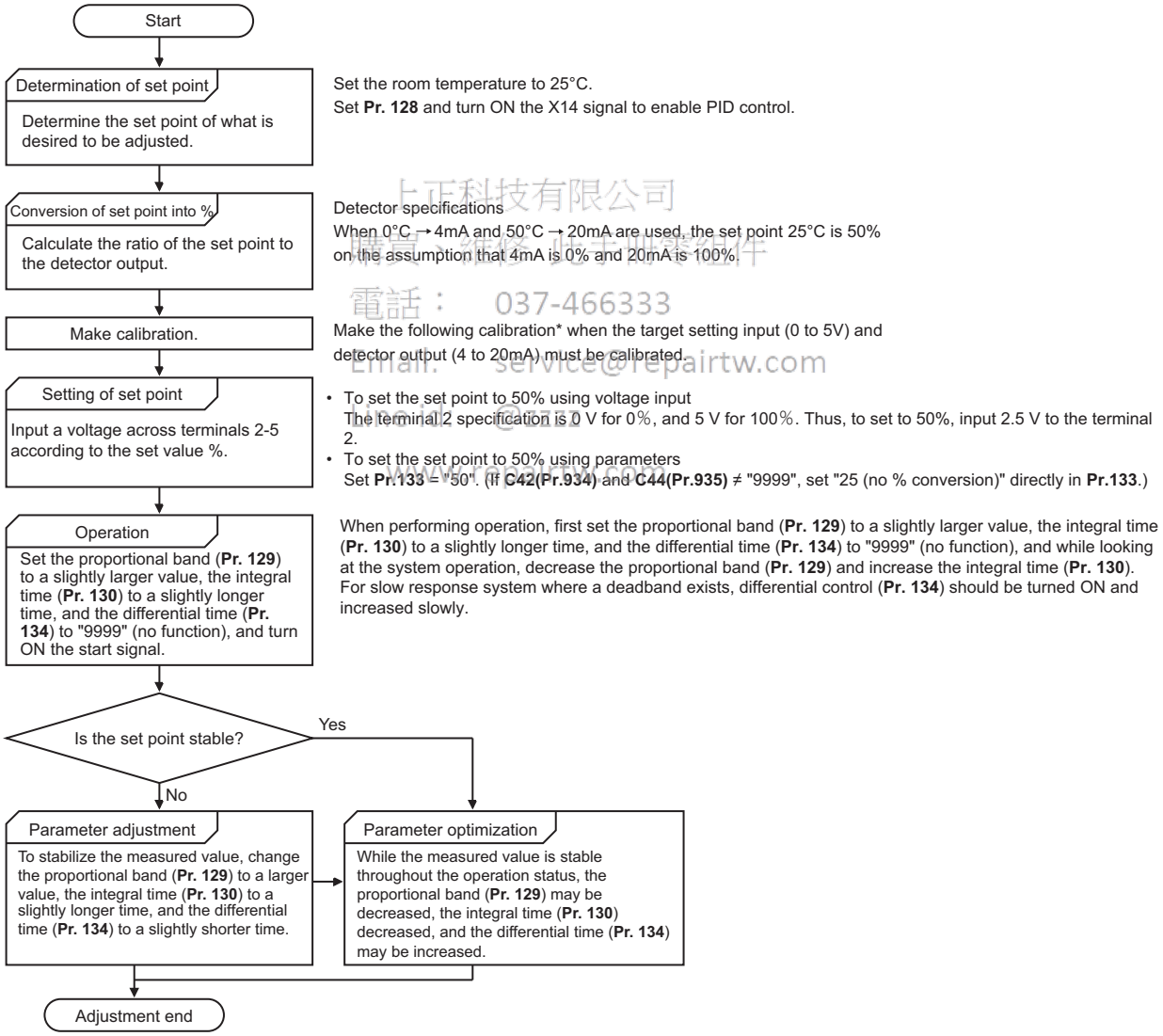

上正科技有限公司
購買、維修 此手冊零組件
電話： 037-466333
Email: service@repairtw.com
www.repairtw.com

* When calibration is required
Calibrate detector output and set point input by **Pr.125, C2 (Pr.902) to C4 (Pr.903)** (terminal 2) or **Pr.126, C5 (Pr.904) to C7 (Pr.905)** (terminal 4).
When both **C42 (Pr.934) and C44 (Pr.935)** are other than "9999", calibrate the detector output and set point input by **Pr.934 and Pr.935** (terminal 4).
(For the details, refer to page 400.)
Make calibration in the PU operation mode during an inverter stop.

• Calibrating set point input

(Example: To enter the set point on terminal 2)

1) Apply the input (for example, 0 V) of set point setting 0% across terminals 2 and 5.
2) Using **C2 (Pr.902)**, enter the frequency (for example, 0 Hz) to be output by the inverter when the deviation is 0%.
3) Using **C3 (Pr.902)**, set the voltage value at 0%.
4) Apply the input (for example, 5 V) of set point setting 100% across terminals 2 and 5.
5) Using **Pr.125**, enter the frequency (for example, 60 Hz) to be output by the inverter when the deviation is 100%.
6) Using **C4 (Pr.903)**, set the voltage value at 100%.

REMARKS

• When the set point is set at **Pr.133**, the setting frequency of **C2 (Pr.902)** is equivalent to 0% and the setting frequency of **Pr.125 (Pr.903)** is equivalent to 100%.

• Calibrating measured value input

1) Apply the input (for example, 4 mA) of measured value 0% across terminals 4 and 5.
2) Perform calibration by **C6 (Pr.904)**.
3) Apply the input (for example, 20 mA) of measured value 100% across terminals 4 and 5.
4) Perform calibration by **C7 (Pr.905)**.

REMARKS

• Set the frequencies set at **C5 (Pr.904) and Pr.126** to each of the same values set at **C2 (Pr.902) and Pr.125**.
• The display unit for analog input can be changed from "%" to "V" or "mA". (Refer to **page 402**.)

• The figure below shows the results of having performed the calibration above.

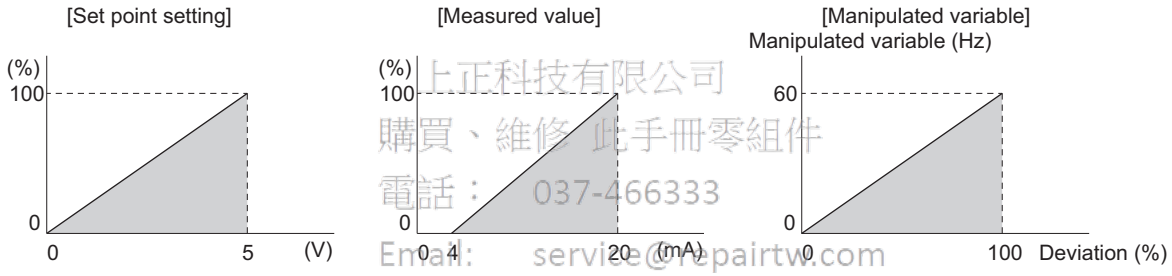

上正科技有限公司
購買、維修 此手冊零組件
電話： 037-466333
Email: service@repairtw.com
Line id: @zzzz
www.repairtw.com

(12) Setting multiple PID functions

• When the second PID function is set, two sets of PID functions can be switched for use. The second PID function is enabled by turning ON the RT signal.
• The second PID function is enabled also when the second PID function is set with the first PID function set to disabled (**Pr.128** = "0") or frequency is set not to be reflected (**Pr.128** = "90, 91, 100, 101, 2000, 2001, 2010, 2011")
• When "10" (second function enabled only during constant-speed operation) is set to **Pr.155**, the second PID function is not selected even if the RT signal turns ON.
• The second PID function parameters and signals function in the same way as the following parameters and signals of the first PID function. Refer to the first PID function when setting the second PID functions.

Classification	First PID function parameters		Second PID function parameters	
	Pr.	Name	Pr.	Name
Parameter	127	PID control automatic switchover frequency	754	Second PID control automatic switchover frequency
	128	PID action selection	753	Second PID action selection
	129	PID proportional band	756	Second PID proportional band
	130	PID integral time	757	Second PID integral time
	131	PID upper limit	1143	Second PID upper limit
	132	PID lower limit	1144	Second PID lower limit
	133	PID action set point	755	Second PID action set point
	134	PID differential time	758	Second PID differential time
	553	PID deviation limit	1145	Second PID deviation limit
	554	PID signal operation selection	1146	Second PID signal operation selection
	575	Output interruption detection time	1147	Second output interruption detection time
	576	Output interruption detection level	1148	Second output interruption detection level
	577	Output interruption cancel level	1149	Second output interruption cancel level
	609	PID set point/deviation input selection	1140	Second PID set point/deviation input selection
	610	PID measured value input selection	1141	Second PID measured value input selection

Classification	First PID function parameters		Second PID function parameters	
	signal	Name	signal	Name
Input signal	X14	PID control valid terminal	X80	Second PID control valid terminal
	X64	PID forward/reverse action switchover	X79	Second PID forward/reverse action switchover
	X72	PID integral value reset	X73	Second PID P control switchover
Output signal	FUP	PID upper limit	FUP2	Second PID upper limit
	FDN	PID lower limit	FDN2	Second PID lower limit
	RL	PID forward/reverse rotation output	RL2	Second PID forward/reverse rotation output
	PID	During PID control activated	PID2	Second During PID control activated
	SLEEP	PID output interruption	SLEEP2	During second PID output shutoff
	Y48	PID deviation limit	Y205	Second PID deviation limit

昌正科技有限公司
歡迎 索取此手冊電腦件
電話 037-466333
Email: service@repairtw.com
Line id: @2222
www.repairtw.com

REMARKS

- Even if the X14 signal is ON, PID control is stopped and multi-speed or JOG operation is performed when the RH, RM, RL, or REX signal (multi-speed operation) or JOG signal (JOG operation) is input.
- PID control is invalid under the following settings.
  Pr.79 Operation mode selection = "6" (Switchover mode)
- Note that input to the terminal 1 is added to the terminals 2 and 4 inputs. For example when **Pr.128** = "20 or 21", the terminal 1 input is considered as a set point and added to the set point of the terminal 2.
- To use terminal 4 and 1 inputs in PID control, set "0" (initial value) to **Pr.858 Terminal 4 function assignment** and **Pr.868 Terminal 1 function assignment**. When a value other than "0", PID control is invalid.
- Changing the terminal assignment using **Pr.178 to Pr.189 or Pr.190 to Pr.196** may affect other functions. Set parameters after confirming the function of each terminal.
- When PID control is selected, the minimum frequency becomes the frequency of **Pr.902** and the maximum frequency becomes the frequency of **Pr.903**.
  (The **Pr.1 Maximum frequency** and **Pr.2 Minimum frequency** settings also are valid.)
- During PID operation, the remote operation function is invalid.
- When control is switched to PID control during normal operation, the frequency during that operation is not carried over, and the value resulting from PID calculation referenced to 0 Hz becomes the command frequency.

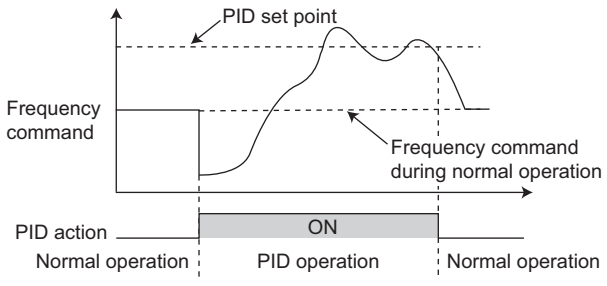

Operation when control is switched to PID control during normal operation

♦ Parameters referred to ♦

Pr.59 Remote function selection ☞ page 288
Pr.73 Analog input selection ☞ page 391
Pr.79 Operation mode selection ☞ page 299
Pr.178 to Pr.189 (input terminal function selection) ☞ page 416
Pr.190 to Pr.196 (output terminal function selection) ☞ page 370
Pr.290 Monitor negative output selection ☞ page 356
C2 (Pr.902) to C7 (Pr.905) Frequency setting voltage (current) bias/gain ☞ page 400

5.14.10 Changing the display increment of the numerical values used in PID control

When the parameter unit (FR-PU07) is used, the display unit of parameters and monitored items related to PID control can be changed to various units.

Pr.	Name	Initial value	Setting range	Description	
759 A600	Operation mode selection	0	0 to 43	Change the PID control-related display unit that is displayed on the parameter unit (FR-PU07).	
			9999	Without display unit switching	
C42 A630 (934)*1	PID display bias coefficient	9999	0 to 500	Set the coefficient of the bias side (minimum) of measured value input.	
			9999	Displayed in %.	
C43 A631 (934)*1	PID display bias analog value	20%	0 to 300%	Set the converted % of the bias side (minimum) current/ voltage of measured value input.	
C44 A632 (935)*1	PID display gain coefficient	9999	0 to 500	Set the coefficient of the gain side (maximum) of measured value input.	
			9999	Displayed in %.	
C45 A633 (935)*1	PID display gain analog value	100%	0 to 300%	Set the converted % of the gain side (maximum) current/ voltage of measured value input.	
1136 A670	Second PID display bias coefficient	9999	0 to 500 9999	Refer to **C42(934)**	Second PID control
1137 A671	Second PID display bias analog value	20%	0 to 300%	Refer to **C43(934)**	
1138 A672	Second PID display gain coefficient	9999	0 to 500 9999	Refer to **C44(935)**	
1139 A673	Second PID display gain analog value	100%	0 to 300%	Refer to **C45(935)**	
1142 A640	Second PID unit selection	9999	0 to 43, 9999	Refer to **Pr.759**	

*1 The parameter number in parentheses is the one for use with the parameter unit (FR-PU07).

上正科技有限公司
購買、維修 此手冊零組件
電話： 037-466333
Email: service@repairtw.com
Line id: @zzzz
www.repairtw.com

(1) Calibration of PID display bias and gain(C42(Pr.934) to C45(Pr.935))

- When both **C42(Pr.934) and C44(Pr.935)** ≠ "9999", the bias and gain values for the set point, measured value and deviation in PID control can be calibrated.
- "Bias"/"gain" function can adjust the relation between PID displayed coefficient and measured value input signal that is externally input.
  Examples of these measured value input signals are 0 to 5 VDC, 0 to 10 VDC, or 4 to 2 mADC.
- Set the value that is displayed when the PID measured value (control amount) is 0% to **C42(Pr.934)** and the value that is displayed when the PID measured value (control amount) is 100% to **C44(Pr.935)**.
- When both of **C42(Pr.934) and C44(Pr.935)** ≠"9999" and **Pr.133** is set as the set point, the setting of **C42(Pr.934)** is treated as 0%, and **C44(Pr.935)** as 100%.

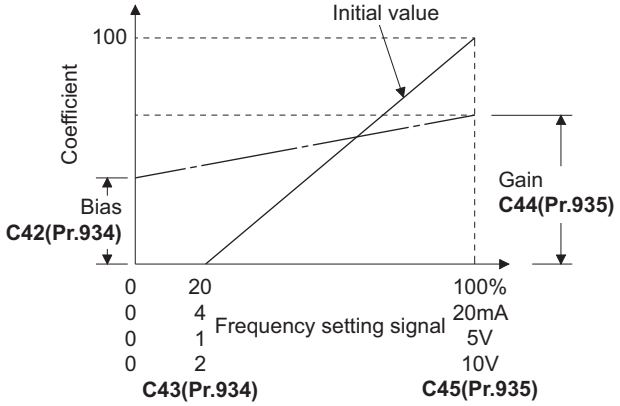

•There are three methods to adjust the PID display bias/gain.

(a) Method to adjust any point by application of a current (voltage) to the measured value input terminal

(b) Method to adjust any point without application of a current (voltage) to the measured value input terminal

(c) Method to adjust only the display coefficient without adjustment of current (voltage)

(Refer to page 400 for details on (a) to (c), and make the necessary adjustments by considering **C7(Pr.905)** as **C45(Pr.935)** and **Pr.126** as **C44(Pr.935)**.

REMARKS

- Always calibrate the input after changing the voltage/current input specification with **Pr.73 and Pr.267**, and the voltage/current input selection switch.

•Take caution when the following condition is satisfied because the inverter recognizes the deviation value as negative (positive) value even though a positive (negative) deviation is given: **Pr.934** (PID bias coefficient) > **Pr.935** (PID gain coefficient)

To perform a reverse action, set **Pr.128 PID action selection** to forward action. Alternatively, to perform a forward action, set **Pr.128** to reverse action.

Pr.934 < Pr.935 (normal setting)		**Pr.934 ≥ Pr.935**	
Reverse action	Reverse action setting to **Pr.128**	Reverse action	Forward action setting to **Pr.128**
Forward action	Forward action setting to **Pr.128**	Forward action	Reverse action setting to **Pr.128**
PID output shutoff release level	**Pr.577** -1000	PID output shutoff release level	1000 -**Pr.577**

(Example) Set the following: **Pr.934**="500", 20% (4 mA is applied), **Pr.935**="100", 100% (20 mA is applied).

When the set point=400 and the measured value=360, the deviation is +40 (>0), but the inverter recognizes the deviation as -10% (<0). Because of this, operation amount does not increase in the reverse operation setting. The operation amount increases when the forward operation is set.

To perform PID output shutoff release at deviation of +40 or higher, set **Pr.577**="960".

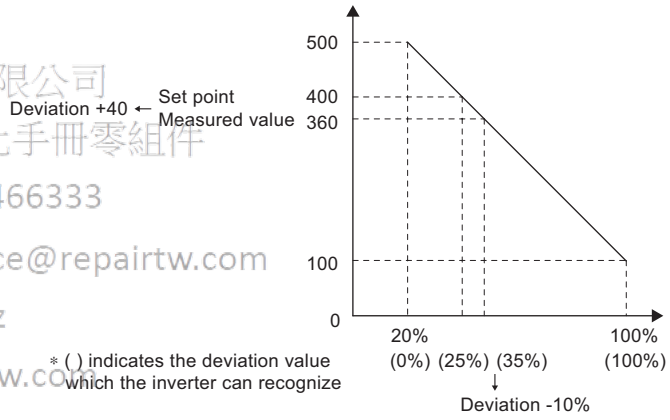

上正科技有限公司
購買、維修 此手冊零組件
電話： 037466333
Email: service@repairtw.com
Line id: @zzzz
www.repairtw.com

•The display of the following parameters is changed according to the **C42 (Pr.934)), C44 (Pr.935), Pr.1136, and Pr1138** settings.

Pr.	Name
131	PID upper limit
132	PID lower limit
133	PID action set point
553	PID deviation limit
577	Output interruption cancel level
761	Pre-charge ending level
763	Pre-charge upper detection level

Pr.	Name
1143	Second PID upper limit
1144	Second PID lower limit
755	Second PID action set point
1145	Second PID deviation limit
1149	Second output interruption cancel level
766	Second pre-charge ending level
768	Second pre-charge upper detection level

(2) Changing the PID display coefficient of the parameter unit (FR-PU07-01) (Pr.759)

•Use **Pr.759 PID unit selection** to change the unit displayed on FR-PU07-01. For the coefficient set in **C42(Pr.934) to C44(Pr.935)**, the displayed units can be changed to the following units.

Pr.759 setting	Displayed unit	Unit name
9999	%	%
0	—	Not displayed
1	K	Kelvin
2	C	Degree Celsius
3	F	Degree Fahrenheit
4	PSI	Pound-force per Square Inch
5	MPa	Mega Pascal
6	kPa	Kilo Pascal
7	Pa	Pascal
8	bar	Bar
9	mbr	Millibar
10	GPH	Gallon per Hour
11	GPM	Gallon per Minute
12	GPS	Gallon per Second
13	L/H	Liter per Hour
14	L/M	Liter per Minute
15	L/S	Liter per Second
16	CFH	Cubic Feet per Hour
17	CFM	Cubic Feet per Minute
18	CFS	Cubic Feet per Second
19	CMH	Cubic Meter per Hour
20	CMM	Cubic Meter per Minute
21	CMS	Cubic Meter per Second

Pr.759 setting	Displayed unit	Unit name
22	ftM	Feet per Minute
23	ftS	Feet per Second
24	m/M	Meter per Minute
25	m/S	Meter per Second
26	lbH	Pound per Hour
27	lbM	Pound per Minute
28	lbS	Pound per Second
29	iWC	Inch Water Column
30	iWG	Inch Water Gauge
31	fWG	Feet of Water Gauge
32	mWG	Meter of Water Gauge
33	iHg	Inches of Mercury
34	mHg	Millimeters of Mercury
35	kgH	Kilograms per Hour
36	kgM	Kilograms per Minute
37	kgS	Kilograms per Second
38	ppm	Pulse per Minute
39	pps	Pulse per Second
40	kW	Kilo Watt
41	hp	Horse Power
42	Hz	Hertz
43	rpm	Revolutions per Minute

上正科技有限公司
購買 維修 此手冊零組件
電話： 037-466333
Email: service@repairtw.com
Line id: @zzzz
www.repairtw.com

5.14.11 PID pre-charge function

This function drives the motor at a certain speed before starting PID control. This function is useful for a pump with a long hose. Without this function, PID control would start before the pump is filled with water, and proper control would not be performed.

Pr.	Name	Initial value	Setting range	Description	
760 A616	Pre-charge fault selection	0	0	Fault indication with output shutoff immediately after pre-charge fault occurs.	
			1	Fault indication with deceleration stop after pre-charge fault occurs.	
761 A617	Pre-charge ending level	9999	0 to 100%	Set the measured amount to end the pre-charge operation.	
			9999	Without pre-charge ending level	
762 A618	Pre-charge ending time	9999	0 to 3600 s	Set the time to end the pre-charge operation.	
			9999	Without pre-charge ending time	
763 A619	Pre-charge upper detection level	9999	0 to 100%	Set the upper limit for the pre-charged amount. A pre-charge fault occurs when the measured value exceeds the setting during pre-charging.	
			9999	Without pre-charge upper limit level	
764 A620	Pre-charge time limit	9999	0 to 3600 s	Set the time limit for the pre-charged amount. A pre-charge fault occurs when the pre-charge time exceeds the setting.	
			9999	Without pre-charge time limit	
765 A656	Second pre-charge fault selection	0	0, 1	Refer to **Pr.760**.	Set the second pre-charge function. The second pre-charge function is valid when the RT signal is ON.
766 A657	Second pre-charge ending level	9999	0 to 100%, 9999	Refer to **Pr.761**.	
767 A658	Second pre-charge ending time	9999	0 to 3600 s, 9999	Refer to **Pr.762**.	
768 A659	Second pre-charge upper detection level	9999	0 to 100%, 9999	Refer to **Pr.763**.	
769 A660	Second pre-charge time limit	9999	0 to 3600 s, 9999	Refer to **Pr.764**.	

上正科技有限公司
購買、維修 此手冊零組件
電話： 037-466333
Email: service@repairtw.com
Line id: @zzzz
www.repairtw.com

(1) Operation selection for the pre-charge function

- To enable the pre-charge function when PID control is enabled, set the pre-charge end conditions at **Pr.761 Pre-charge ending level** and at **Pr.762 Pre-charge ending time**, or set "77" to **Pr.178 to Pr.189 (input terminal function selection)**. When operation is started, the inverter runs at the frequency set to **Pr.127 PID control automatic switchover frequency** to enter the pre-charge state.
- Pre-charge ends and PID control starts after a pre-charge ending condition is satisfied.
- The pre-charge function is also activated at a start after release of a PID output suspension (SLEEP) state or MRS (output shutoff). The PID output suspension (SLEEP) function is not activated until the started pre-charge operation ends.
- During pre-charge operation, the During pre-charge operation (Y49) signal is output. For the terminal used for Y49 signal output, set "49 (positive logic)" or "149 (negative logic)" in any of **Pr.190 to Pr.196 (Output terminal function selection)** to assign the function.
- The pre-charge function valid/invalid settings and pre-charge ending conditions are as follows:

Pr.127 setting	Pre-charge ending condition setting			Pre-charge function	Valid pre-charge ending condition*1		
	Pr.761 setting	Pr.762 setting	X77 signal				
9999	-	-	-	Disabled	-		
Other than 9999	9999	9999	Not assigned				
			Assigned	Enabled	-	-	X77
		Other than 9999	Not assigned		-	Time	-
			Assigned		-	Time	X77
	Other than 9999	9999	Not assigned		Result	-	-
			Assigned		Result	-	X77
		Other than 9999	Not assigned		Result	Time	-
			Assigned		Result	Time	X77

*1 When two or more ends conditions are satisfied, the pre-charge operation ends by the first-satisfied condition.

REMARKS

- During the pre-charge operation, it is regarded as integrated value=estimated value. The motor speed may drop shortly from the automatic switchover frequency depending on the parameter settings.
- Parameter changes and switchover to the second PID control are applied immediately. If PID control has not started when the settings were changed, PID control starts with changed settings. (If PID control has already started, these settings do not apply. If the changed settings already satisfies a condition to start PID control, the PID control starts as soon as these are changed.)
- The pre-charge also ends when PID control is set to invalid, the start command has been turned OFF, and output has been shut off.

(2) Example of pre-charge operation

•When the measured amount reaches the pre-charge ending level (**Pr.761 Pre-charge ending level** ≠ "9999")

The pre-charge operation ends when the measured value reaches the **Pr.761** setting or higher, then the PID control is performed.

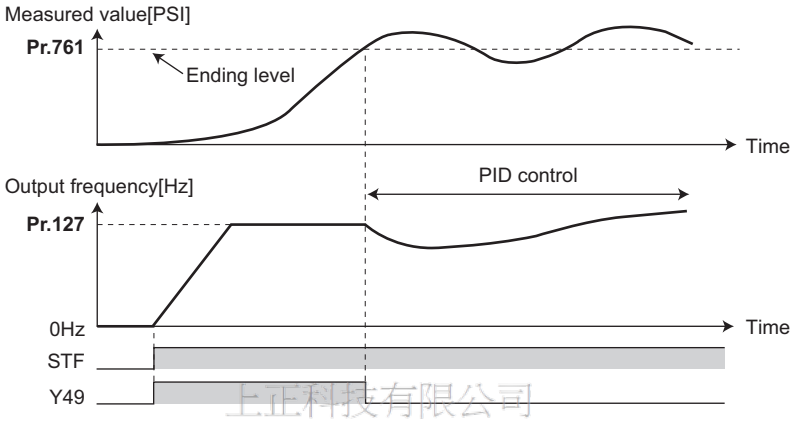

上正科技有限公司
購買、維修 此手冊零組件
電話： 037-466333
Email: service@repairtw.com
Line id: @zzzz
www.repairtw.com

•When the elapsed time reaches the pre-charge ending time (**Pr.762 Pre-charge ending time** ≠ "9999")

The pre-charge operation ends when the pre-charge time reaches the **Pr.762** setting or higher, then the PID control is performed.

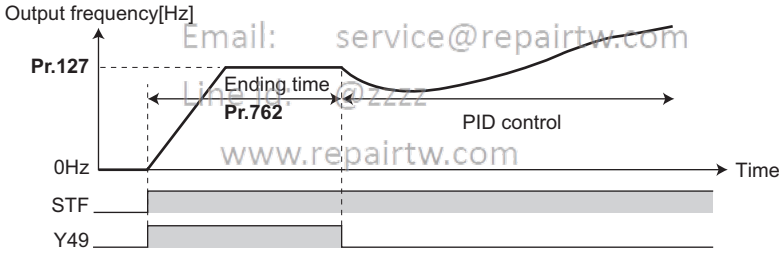

•When the signal is input to end the pre-charge operation

When the X77 signal turns ON, the pre-charge operation ends, and the PID control starts. (If a start command is given while the X77 signal is ON, the pre-charge operation is not performed, and PID control starts.)

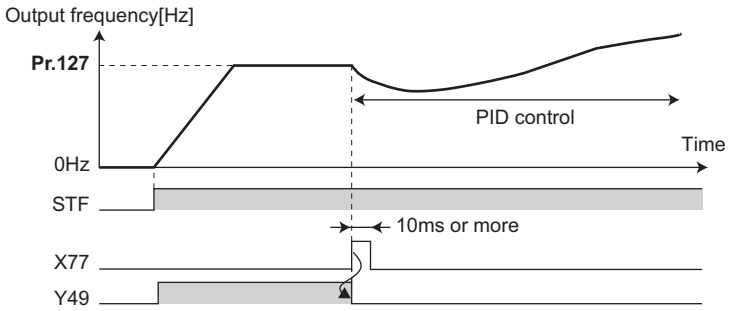

REMARKS

- When the PID output suspension (SLEEP) function is in use, and the X77 signal is set to valid after this function is released, set the X77 signal to OFF after checking that the during pre-charge operation signal (Y49) is OFF.
- When the PID output suspension (SLEEP) function is in use, and PID control is to be performed immediately after this function is released, leave the X77 signal ON until PID control ends.
- When the pre-charge operation is valid, the pre-charge operation is performed at the output shutoff cancellation (MRS signal, etc.). (The pre-charge operation is also performed in the case of instantaneous power failure when the automatic restart after instantaneous power failure is valid.)
- When the control method is changed to PID control from a control with higher priority in frequency command (multi-speed setting, Jog operation, etc.), the motor is accelerated/decelerated until its speed reaches the automatic switchover frequency (**Pr.127**), and the pre-charge is performed.

(3) Operation setting at pre-charge fault

•The protective function can be activated when limit values are exceeded if the time limit is set at **Pr.764 Pre-charge time limit** and the measured value limit level is set at **Pr.762 Pre-charge ending time**.

•Whether to shut off output immediately after the protective function is activated or after a deceleration stop can be selected by **Pr.760 Pre-charge fault selection**.

•When the time limit is exceeded, the Pre-charge time over (Y51) signal is output. When the measured value limit level is exceeded, the Pre-charge level over (Y53) signal is output. For the Y51 signal, set "51 (forward action)" or "151 (reverse action)" to **Pr.190 to Pr.196 (output terminal function selection)**, and for the Y53 signal, set "53 (forward action)" or "153 (reverse action)" in **Pr.190 to Pr.196 (output terminal function selection)** to assign the functions to terminals.

REMARKS

- For **Pr.764 Pre-charge time limit**, set a value greater than **Pr.762 Pre-charge ending time**.
- For **Pr.763 Pre-charge upper detection level**, set a value greater than **Pr.761 Pre-charge ending level**.

上正科技有限公司
購買、維修 此手冊零組件
電話： 037-466333
Email: service@repairtw.com
Line id: @zzzz
www.repairtw.com

•Example of protective function by time limit (**Pr.760** = "0")

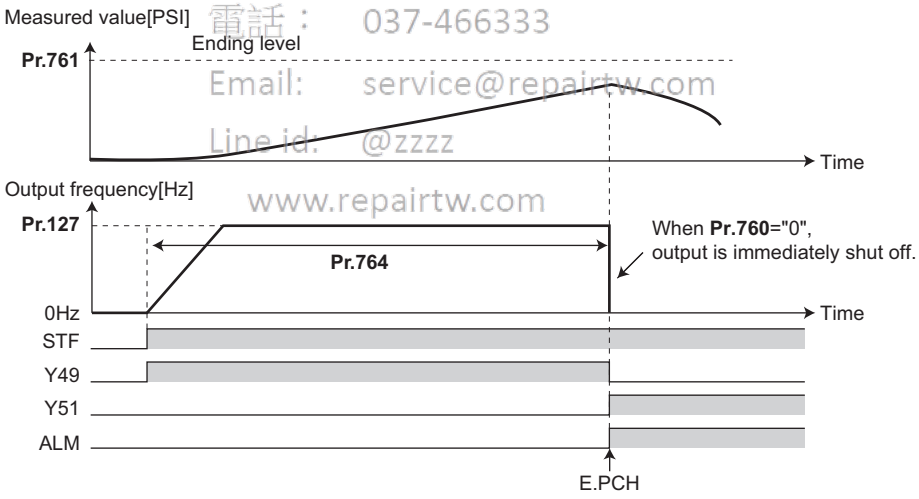

•Example of protective function measured value limit (**Pr.760** = "1")

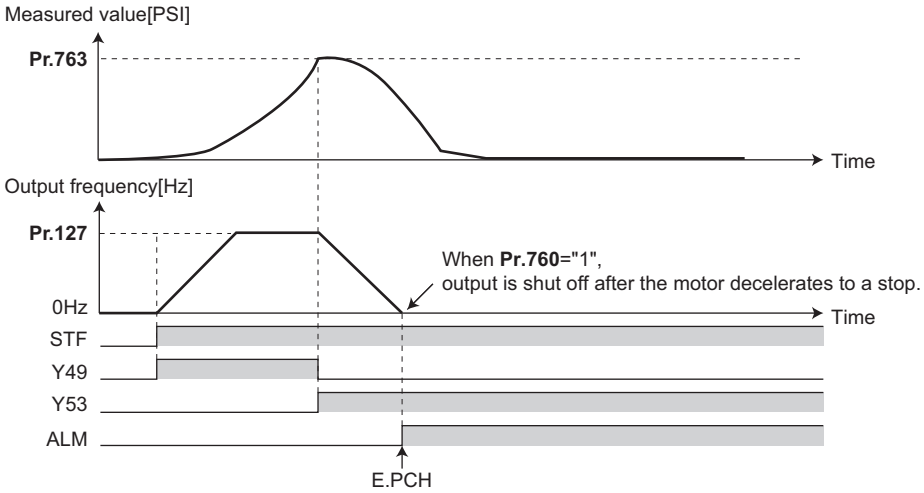

(4) Setting multiple PID pre-charge functions

- When the second pre-charge function is set, two sets of pre-charge functions can be switched for use. The second pre-charge function is enabled by turning ON the RT signal.
- The second pre-charge function parameters and signals function in the same way as the following parameters and signals of the first pre-charge function. Refer to the first pre-charge function when setting the second pre-charge functions.

Classification	First pre-charge function parameters		Second pre-charge function parameters	
	Pr.	Name	Pr.	Name
Parameter	760	Pre-charge fault selection	765	Second pre-charge fault selection
	761	Pre-charge ending level	766	Second pre-charge ending level
	762	Pre-charge ending time	767	Second pre-charge ending time
	763	Pre-charge upper detection level	768	Second pre-charge upper detection level
	764	Pre-charge time limit	769	Second pre-charge time limit

Classification	First pre-charge function parameters		Second pre-charge function parameters	
	Signal	Name	Signal	Name
Input signal	X77	Pre-charge end command	X78	Second pre-charge end command
Output signal	Y49	During pre-charge operation	Y50	During second pre-charge operation
	Y51	Pre-charge time over	Y52	Second pre-charge time over
	Y53	Pre-charge level over	Y54	Second pre-charge level over

REMARKS

- The second PID pre-charge function is valid also when the first pre-charge function is set to invalid and the second pre-charge function is set.
- When "10" (second function enabled only during constant-speed operation) is set to **Pr.155**, the second PID function is not selected even if the RT signal turns ON.

上正科技有限公司
購買、維修 此手冊零組件
電話： 037-466333
Email: service@repairtw.com
Line id: @zzzz
www.repairtw.com

5.14.12 Dancer control

PID control is performed using the detected dancer roll positions as feedback data. The dancer roll is controlled to be at a designated position.

Pr.	Name	Initial value	Setting range	Description		
44 F020	**Second acceleration/ deceleration time**	5 s	0 to 3600 s	Set the acceleration/deceleration time during dancer control. In dancer control, this parameter becomes the acceleration/ deceleration time of the main speed. This setting does not operate as the second acceleration/ deceleration time.		
45 F021	**Second deceleration time**	9999	0 to 3600 s	Set the deceleration time during dancer control. In dancer control, this parameter becomes the deceleration time of the main speed. This setting does not operate as the second deceleration time.		
			9999	**Pr.44** is the deceleration time.		
128 A610	**PID action selection**	0	0	No PID action		
			40	PID reverse action	Additive method: Fixed	For dancer control
			41	PID forward action	Additive method: Fixed	
			42	PID reverse action	Additive method: Ratio	
			43	PID forward action	Additive method: Ratio	
			Others	Refer to page 483.		
129 A613	**PID proportional band**	100%	0.1 to 1000%	If a narrow proportional band is set (small parameter setting value), the manipulated amount changes considerably by slight changes in the measured value. As a result, response improves as the proportional band becomes narrower, though stability worsens as shown by the occurrence of hunting. Gain Kp=1/proportional band		
			9999	Without proportional band		
130 A614	**PID integral time**	1s	0.1 to 3600 s	With deviation step input, this is the time (Ti) used for obtaining the same manipulated amount as proportional band (P) by only integral (I) action. Arrival to the set point becomes quicker the shorter an integral time is set, though hunting is more likely to occur.		
			9999	Without integral control		
131 A601	**PID upper limit**	9999	0 to 100%	Sets the upper limit. The FUP signal is output when the feedback value exceeds this setting. The maximum input (20 mA/5 V/10 V) of the measured value (terminal 4) is equivalent to 100%.		
			9999	No function		
132 A602	**PID lower limit**	9999	0 to 100%	Set the lower limit. The FDN signal is output when the measured value (terminal 4) falls below the setting range. The maximum input (20 mA/5 V/10 V) of the measured value is equivalent to 100%.		
			9999	No function		
133 A611	**PID action set point**	9999	0 to 100%	Set the set point during PID control.		
			9999	Input of set point by terminal selected by **Pr.609**		
134 A615	**PID differential time**	9999	0.01 to 10 s	With deviation ramp input, this is the time (Td) used for obtaining the manipulated amount only by proportional action (P). Response to changes in deviation increase greatly as the differential time increases.		
			9999	Without differential control		

上正科技有限公司
購買、維修 此手冊零組件
電話： 037-466833
Email: service@repairtw.com
Line id: @zzzz
www.repairtw.com

(A) Application parameters

Pr.	Name	Initial value	Setting range	Description
609 A624	**PID set point/deviation input selection**	2	1	Input set point from terminal 1
			2	Input set point from terminal 2
			3	Input set point from terminal 4
			4	Input set point via CC-Link communication
			5	Input set point by PLC function
610 A625	**PID measured value input selection**	3	1	Input measured value from terminal 1
			2	Input measured value from terminal 2
			3	Input measured value from terminal 4
			4	Input measured value via CC-Link communication
			5	Input measured value by PLC function
1134 A605	**PID upper limit manipulated value**	100%	0 to 100%	Set the upper limit of PID action.
1135 A606	**PID lower limit manipulated value**	100%	0 to 100%	Set the lower limit of PID action.

(1) Block diagram of dancer control

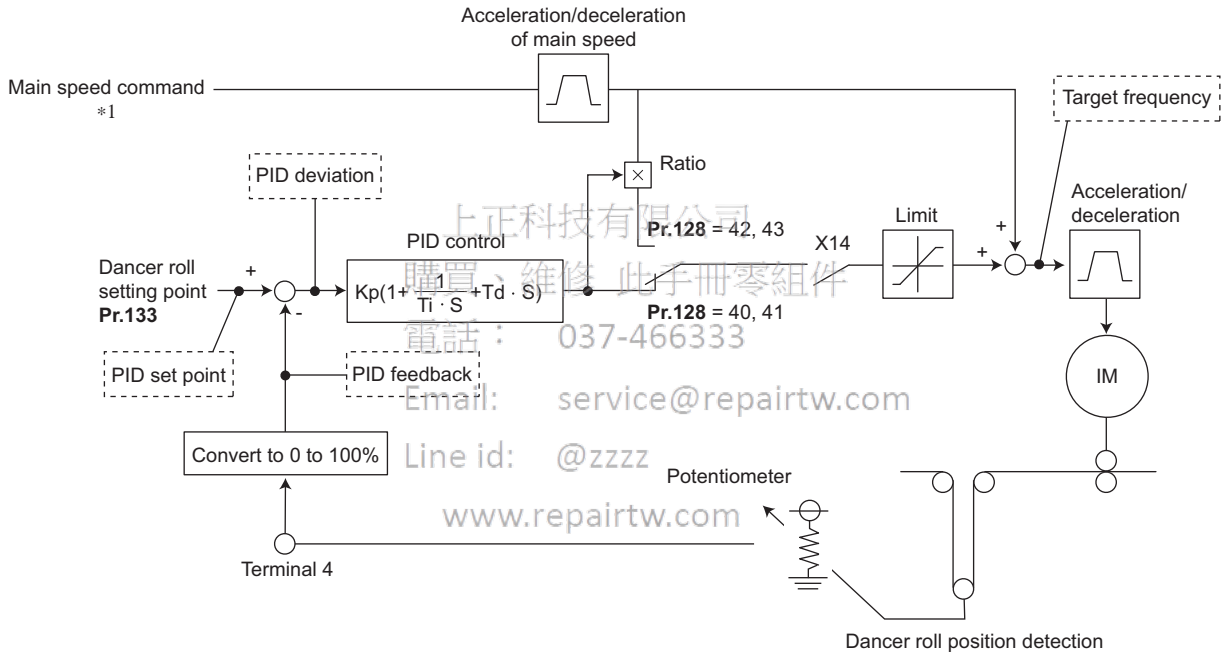

上正科技有限公司
購買、維修 此手冊零組件
電話： 037-466333
Email: service@repairtw.com
Line id: @zzzz
www.repairtw.com

*1 The main speed can be selected in all operation modes, External (analog voltage input, multi-speed), PU (digital frequency setting) and Communication (RS-485).

(2) Outline of dancer control

- Dancer control is performed by setting "40 to 43" in **Pr.128 PID action selection**. The main speed command is the speed command for each operation mode (External, PU and communication). PID control is performed by the dancer roll position detection signal, and the control result is added to the main speed command. For the main speed acceleration/deceleration time, set the acceleration time to **Pr.44 Second acceleration/deceleration time** and the deceleration time to **Pr.45 Second deceleration time**.

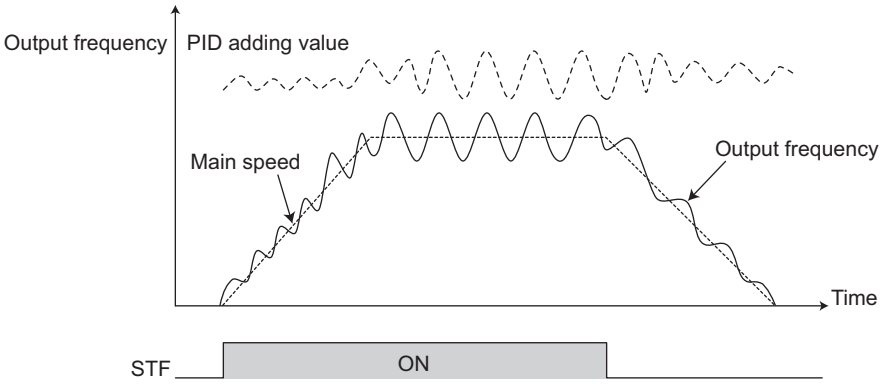

REMARKS

- Normally, set **Pr.7 Acceleration time** and **Pr.8 Deceleration time** to "0 s". When the **Pr.7** and **Pr.8** settings are large, dancer control response becomes slow during acceleration/deceleration.
- The **Pr.127 PID control automatic switchover frequency** setting is enabled. The larger setting value between **Pr.7** and **Pr.44** is used as the acceleration time during normal operation. For the deceleration time, the larger setting value between **Pr.8** and **Pr.45** is used. (For the details of **Pr.127**, refer to page 483.)
- If an automatic restart after instantaneous power failure is activated during dancer control, E.OC[] or E.OV[] is likely to occur. In such case, disable the automatic restart after instantaneous power failure function (**Pr.57** = "9999").

上正科技有限公司
購買、維修 此手冊零組件
電話： 037-466333
Email: service@repairtw.com
Line id: @zzzz
www.repairtw.com

(3) Connection diagram

- Sink logic
- **Pr.128** =41
- **Pr.182** =14
- **Pr.193** =14
- **Pr.194** =15
- **Pr.133** =set point

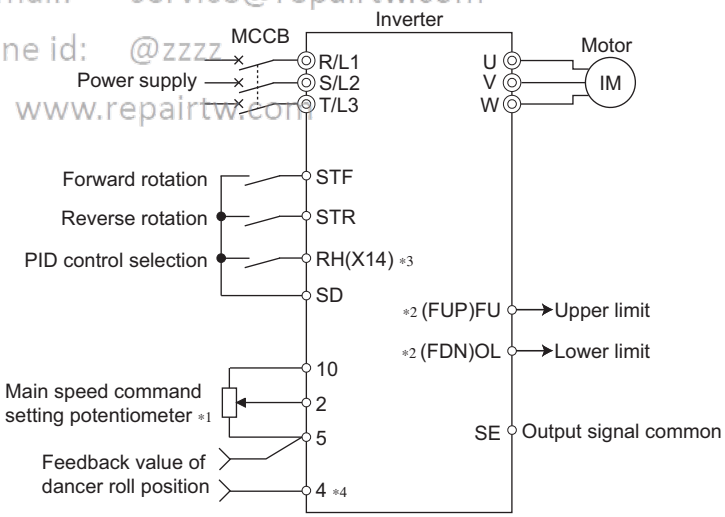

*1 The main speed command differs according to each operation mode (External, PU, communication).
*2 The output signal terminal to be used differs according to the **Pr.190 to Pr.196 (Output terminal function selection)** setting.
*3 The input signal terminal to be used differs according to the **Pr.178 to Pr.189 (Input terminal function selection)** setting.
*4 The AU signal need not be input.

(A) Application parameters

(4) Dancer control operation selection (Pr.128)

Pr.128 setting	PID action	Additive method	Set point input	Measured value input
0	PID invalid	-	-	-
40	Reverse action	Fixed	Set by **Pr.133** or Input by terminal selected by **Pr.609** *1	Input by terminal selected by **Pr.610**
41	Forward action			
42	Reverse action	Ratio		
43	Forward action			
Others	Refer to page 483.			

*1 When **Pr.133** ≠ "9999", the **Pr.133** setting is valid.

- To enable dancer control, set "40 to 43" in **Pr.128 PID action selection**.
- Dancer control is enabled only when the PID control valid terminal (X14) signal turns ON when "14" is set in one of **Pr.178 to Pr.182 (Input terminal function selection)** and X14 signal is assigned.
  When the X14 signal is not assigned, dancer control is enabled only by the **Pr.128** setting.
- Input the main speed command (External, PU, Communication). Dancer control is also supported by the main speed command in all operation modes.
- Input the set point between the terminals 2 and 5 (the setting can be selected using **Pr.133** or **Pr.609**) and input the measured value signal (dancer roll position detection signal) between the inverter terminals 4 and 5 (the setting can be selected using **Pr.610**).
- The action of **Pr.129 PID action selection, Pr.130 PID integral time, Pr.131 PID upper limit, Pr.132 PID lower limit and Pr.134 PID differential time** is the same as PID control action. In the relationship between the control amount (%) and frequency in PID control, 0% and 100% are equivalent to the frequencies set to **Pr.902** and **Pr.903**, respectively.

REMARKS

- When **Pr.128** is set to "0" or the X14 signal is OFF, regular inverter running not dancer control is performed.
- Dancer control is enabled by turning ON/OFF the bits of terminals assigned the X14 signal by RS-485 communication or over the network.
- When dancer control is selected, set the PID output suspension function (**Pr.575 Output interruption detection time** = "9999")
- When **Pr.561 PTC thermistor protection level** ≠ "9999", terminal 2 cannot be used for the main speed command. Terminal 2 becomes the PTC thermistor input terminal.

上正科技有限公司
購買、維修此手冊零組件
電話： 037-466333
Email: service@repairtw.com
Line id: @zzzz
www.repairtw.com

(5) Selection of set point/measured value input method (Pr.609, Pr.610)

- Select the set point input method by **Pr.609 PID set point/deviation input selection** and the measured value input method by **Pr.610 PID measured value input selection**. Switch the power voltage/current specifications of terminals 2 and 4 by **Pr.73 Analog input selection** or **Pr.267 Terminal 4 input selection** to match the specification of the input device.
- When **Pr.133 PID action set point** ≠ "9999", **Pr.133** is the set point.
  When the set point is set at **Pr.133**, the setting frequency of **Pr.902** is equivalent to 0% and the setting frequency of **Pr.903** is equivalent to 100%.

Pr.609, Pr.610 settings	Input method
1	Terminal 1*1
2	Terminal 2*1
3	Terminal 4*1
4	CC-Link communication
5	PLC function

*1 When the same input method has been selected for the set point and measured value at **Pr.609** and **Pr.610**, set point input is invalid. (Inverter runs at set point 0%)

REMARKS

- After changing the **Pr.73** and **Pr.267** settings, check the voltage/current input switch. Incorrect setting may cause a fault, failure or malfunction.(For the details of the setting, refer to page 391.)
- When terminals 2 and 4 are selected for deviation input, perform bias calibration using C3 and C6 to prevent a minus voltage from being entered as the deviation input signal. Input of a minus voltage might damage devices and the inverter.

- The following shows the relationship between the input values of the analog input terminals, and the set point and measured value.

Input terminal	Inspect specification*5	Relationship with analog input		Calibration parameter
		Set point	Result	
Terminal 2	0 to 5 V	0 V=0% 5 V=100%	0 V=0% 5 V=100%	**Pr.125, C2 to C4**
	0 to 10 V	0 V=0% 10 V=100%	0 V=0% 10 V=100%	
	0 to 20 mA	0 mA=0% 20 mA=100%	0 mA=0% 20 mA=100%	
Terminal 1	0 to ±5 V	-5 V to 0 V=0% 5 V=+100%	-5 V to 0 V=0% 5 V=+100%	When **Pr.128** = "10" **Pr.125, C2 to C4** When **Pr.128** ≥ "1000" **C12 to C15**
	0 to ±10V	-10 V to 0 V=0% 10 V=+100%	-10 V to 0 V=0% 10 V=+100%	
Terminal 4	0 to 5 V	0 V to 1 V=0% 5 V=100%	0 V to 1 V=0% 5 V=100%	**Pr.126, C5 to C7**
	0 to 10 V	0 V to 2 V=0% 10 V=100%	0 V to 2 V=0% 10 V=100%	
	0 to 20 mA	0 to 4 mA=0% 20 mA=100%	0 to 4 mA=0% 20 mA=100%	

*2 Can be changed by **Pr.73 and Pr.267** and the voltage/current input switch. (Refer to page 391.)

(6) Selection of additive method for PID calculation result

- When ratio is selected as the additive method (**Pr.128** = "42, 43"), PID calculation result × (ratio of main speed) is added to the main speed.
  The ratio is determined by the **Pr.125 Terminal 2 frequency setting gain frequency and C2 (Pr.902) Terminal 2 frequency setting bias frequency** settings. In the initial status, 0 to 60 Hz is set for 0 to 100%. Thus, 60 Hz main speed is regarded as 100%, and the 30 Hz main speed is regarded as 50%.

上正科技有限公司
購買、維修、此手冊零組件
電話： 037-466333
Email: service@repairtw.com
Line id: @zzzz
www.repairtw.com

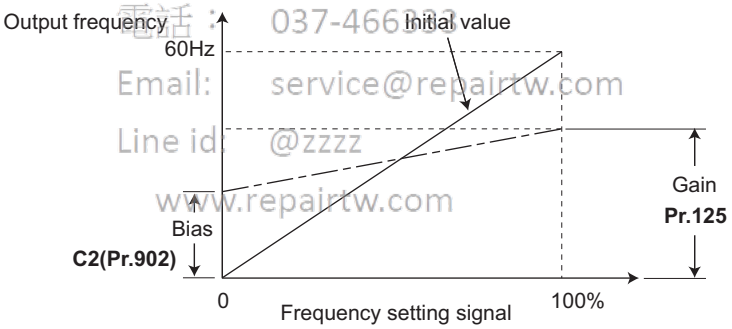

REMARKS

- Even if **C4 (Pr.903)** is set to other than 100%, the frequency setting signal is treated as 100%.
- Even if **C3 (Pr.902)** is set to other than 0%, the frequency setting signal is treated as 0%.
- If **C2(Pr.902)** is set to other than 0 Hz, the frequency setting signal is 0% at the **C2 (Pr.902)** frequency setting or below.

(A) Application parameters

(7) Setting the upper and lower limits of the PID manipulated amount (Pr.1134, Pr.1135)

- Set the upper and lower limits of the PID manipulated amount.
- The upper limit of the manipulated amount is the frequency obtained by adding the value resulting from frequency conversion of **Pr.1134** to the main speed.
  The lower limit of the manipulated amount is the frequency obtained by subtracting the value resulting from frequency conversion of **Pr.1135** from the main speed.

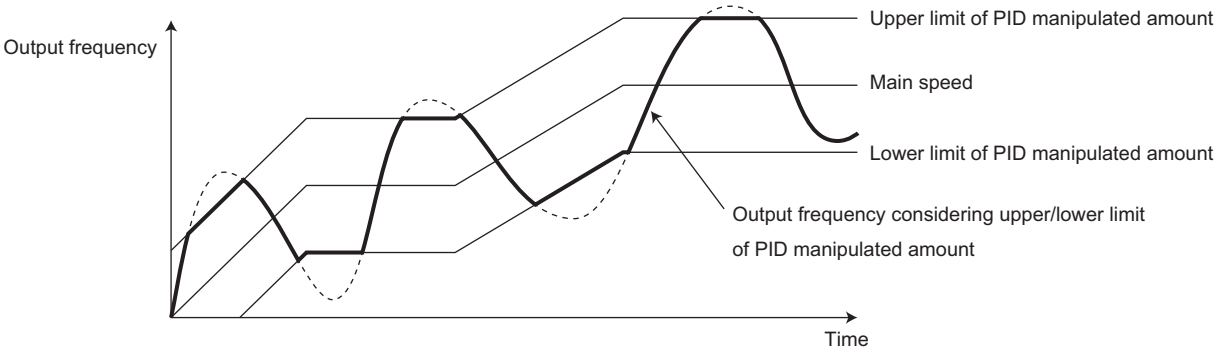

(8) Input/output signals

- The following signals can be used by assigning functions to **Pr.178 to Pr.189 (Input terminal function selection) and Pr.190 to Pr.196 (Output terminal function selection)**.
- Input signal

Signal	Function	Pr.178 to Pr.189 setting	Description
X14	PID control valid terminal	14	When this signal is assigned to the input terminal, PID control is enabled when this signal is ON.
X64	PID forward/reverse action switchover	64	PID control is switched between forward and reverse action without changing parameters by turning ON this signal.
X72	PID integral value reset	72	Integral and differential values can be reset by turning ON this signal.

- Output signal

Signal	Function	Pr.190 to Pr.196 setting		Description
		positive logic	negative logic	
FUP	PID upper limit	15	115	Output when the measured value signal exceeds **Pr.131 PID upper limit**.
FDN	PID lower limit	14	114	Output when the measured value signal exceeds **Pr.132 PID lower limit**.
RL	PID forward/reverse rotation output	16	116	"HI" is output when the output display of the parameter unit is forward rotation (FWD) and "LOW" is output when the display is reverse rotation (REV) and stop (STOP).
PID	During PID control activated	47	147	Turns ON during PID control.

上正科技有限公司
購買、維修 此手冊零組件
電話： 03-466333
Email: service@repairtw.com
Line id: @zzzz
www.repairtw.com

REMARKS

- Changing the terminal assignment using **Pr.178 to Pr.189 or Pr.190 to Pr.196** may affect other functions. Set parameters after confirming the function of each terminal.

(9) PID monitor function

- This function displays the PID control set point and measured value on the operation panel, and can output these from the terminals FM, AM and CA.
- Set the following values to **Pr.52 Operation panel main monitor selection**, **Pr.774 to Pr.776 (Operation panel monitor selection), Pr.992 Operation panel setting dial push monitor selection, Pr.54 FM/CA terminal function selection and Pr.158 AM terminal function selection** for each monitor.

Parameter settings	Monitor description	Minimum increment	Monitor range			Remarks
			Terminal FM/CA	Terminal AM	Operation panel	
97	Dancer main speed setting	0.01 Hz	0 to 590 Hz			When outputting from terminals FM, CA and AM, the full scale value can be adjusted by **Pr.55 Frequency monitoring reference**.

REMARKS

- Refer to page 492 for details on other PID control monitors.

(10) Priority of main speed commands

- The priority of main speed command sources when the speed command source is External is as follows:
  JOG signal > multi-speed setting signal (RL/RM/RH/REX) > pulse train input > 16bit digital input (option FR-A8AX) > analog input (terminals 2, 4, 1)
- The priority of main speed command sources when "3" is set to **Pr.79 Operation mode selection** is as follows:
  Multi-speed setting signal (RL/RM/RH/REX) > frequency setting (digital setting by PU or operation panel)
- Even if the remote operation function is selected by **Pr.59 Remote function selection** ≠ "0", compensation of the remote setting frequency against the main speed is ignored. (The value is "0".)
- If terminal 1 is selected for the first and second PID, terminal 1 added compensation of the main speed is invalid.
- If terminal 2 is selected for the first and second PID, the terminal 2 override function of the main speed is invalid.
- If the same terminal as an external input terminal having a speed command source (external terminal where a main speed is input) is specified as the measured value input or set point input, the main speed is treated as "0".
- Polarity reversible operation of the main speed is not possible.

上正科技有限公司
購買 維修 此手冊零組件
電話： 037-466333
Email: service@repairtw.com
Line id: @zzzz
www.repairtw.com

(11) Adjustment procedure for dancer roll position detection signal

- When the input of terminal 4 is voltage input, 0 V and 5 V (10 V) are the lower limit position and upper limit position, respectively. When it is current input, 4 mA and 20 mA are the lower limit position and upper limit position, respectively. (initial value) When the potentiometer has an output of 0 to 7 V, **C7 (Pr.905)** must be calibrated at 7 V.

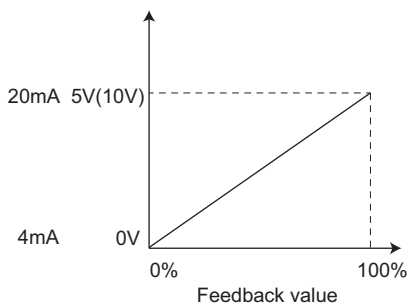

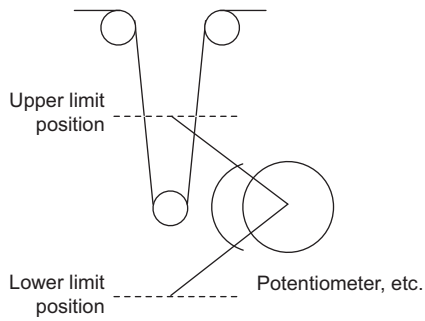

(Example) To execute control at the dancer center position using a 0 to 7 V potentiometer

1) Switch the current/voltage input selection switch to "OFF", set "2" to **Pr.267** and set terminal 4 input to voltage input.
2) Input 0 V across terminals 4 and 5, and calibrate **C6 (Pr.904)**. (The % display that is indicated at analog calibration is not related to the % of the feedback value.)
3) Input 7 V across terminals 4 and 5, and calibrate **C6 (Pr.905)**. (The % display that is indicated at analog calibration is not related to the % of the feedback value.)
4) Set **Pr.133** to "50%".

REMARKS

- After changing the **Pr.267** setting, check the voltage/current input selection switch. Incorrect setting may cause a fault, failure or malfunction. (Refer to page 391 for the setting.)
- If the RH, RM, RL, or REX signal (multi-speed operation), or JOG signal is input in regular PID control, PID control is interrupted. However, at dancer control, these signals are treated as main speed commands, so PID control is continued.
- During dancer control, **Pr.44 and Pr.45 Second deceleration time** is the parameter for setting the acceleration/deceleration time for the main speed command. This function does not function as a second function.
- When the switchover mode is set by setting "6" to **Pr.79**, dancer control (PID control) is invalid.
- When dancer control is selected, the speed command of terminal 4 by the AU signal is invalid.
- The acceleration/deceleration action of the main speed command is the same as that when the frequency is increased or decrease by analog input. For this reason,
  - •The SU signal sometimes stays ON even if operation is turned ON/OFF by the start signal. (The constant-speed status is maintained.)
  - •The DC brake operation start frequency when the start signal is turned OFF is not **Pr.10** but the smaller value between **Pr.13** and 0.5 Hz.
  - •The set frequency monitor is the value "main speed command + PID control" which is constantly changing.
- With the main speed setting frequency setting, acceleration/deceleration is performed for the acceleration/deceleration time set at **Pr.44 and Pr.45**, and with the output frequency setting, acceleration/deceleration is performed for the acceleration/deceleration time set at **Pr.7** and **Pr.8**. For this reason, with the output frequency, when the time set at **Pr.7** and **Pr.8** is longer than the time set at **Pr.44 and Pr.45**, acceleration/deceleration is performed for the acceleration/deceleration time set at **Pr.7** and **Pr.8**.
- The limit of the integral term is the smaller of 100% and the value after conversion of the straight line after interpolation of **Pr.1 Maximum frequency** by **Pr.902** and **Pr.903** to the PID manipulated amount. Note, however, that the lower limit frequency limits the output frequency, but does not restrict the action of the integral item.

♦ Parameters referred to ♦

Pr.57 Restart coasting time ☞page 511
Pr.59 Remote function selection ☞page 288
Pr.73 Analog input selection ☞page 391
Pr.79 Operation mode selection ☞page 299
Pr.178 to Pr.189 (input terminal function selection) ☞page 416
Pr.190 to Pr.196 (output terminal function selection) ☞page 370
Pr.561 PTC thermistor protection level ☞page 322
C2 (Pr.902) to C7 (Pr.905) Frequency setting voltage (current) bias/gain ☞page 400

上正科技有限公司
購買、維修 此手冊零組件
電話： 037-466333
Email: service@repairtw.com
Line id: @zzzz
www.repairtw.com

5.14.13 Automatic restart after instantaneous power failure/flying start with an induction control

V/F Magnetic flux Sensorless Vector

The inverter can be restarted without stopping the motor in the following conditions:
- When switching from commercial power supply operation over to inverter running
- When an instantaneous power failure occurs during inverter running
- When the motor is coasting at start

Pr.	Name	Initial value	Setting range	Description
162 A700	**Automatic restart after instantaneous power failure selection**	0	0	Frequency search only performed at the first start
			1	Reduced voltage start only at the first start (no frequency search)
			2	Encoder detection frequency search
			3	Frequency search only performed at the first start (reduced impact restart)
			10	Frequency search at every start
			11	Reduced voltage start at every start (no frequency search)
			12	Encoder detection frequency search at every start
			13	Frequency search at every start (reduced impact restart)
299 A701	**Rotation direction detection selection at restarting**	0	0	Without rotation direction
			1	With rotation direction
			9999	When **Pr.78** ="0", with rotation direction When **Pr.78** ="1, 2" without rotation direction
57 A702	**Restart coasting time**	9999	0	Coasting time differs according to the inverter capacity.*1
			0.1 to 30 s	Set the waiting time for the inverter to perform a restart at power restoration after an instantaneous power failure.
			9999	No restart
58 A703	**Restart cushion time**	1 s	0 to 60 s	Set the voltage cushion time for restart.
163 A704	**First cushion time for restart**	0 s	0 to 20 s	Set the voltage cushion time for restart. Consider this matched to the size of the load (moment of inertia/torque)
164 A705	**First cushion voltage for restart**	0%	0 to 100%	
165 A710	**Stall prevention operation level for restart**	150%	0 to 400%	Set the stall prevention operation level at a restart operation on the assumption that the inverter rated current is 100%.
611 F003	**Acceleration time at a restart**	9999	0 to 3600 s	Set the acceleration time that takes to reach **Pr.20 Acceleration/deceleration reference frequency** setting at a restart.
			9999	Standard acceleration time (for example, **Pr.7**) is applied as the acceleration time at restart.

*1 The coasting time when **Pr.57** = "0" is as shown below. (When **Pr.162, Pr.570** are set to the initial value.)
FR-A820-00105(1.5K) or lower and FR-A840-00052(1.5K) or lower: 0.5 s
FR-A820-00167(2.2K) to FR-A820-00490(7.5K) and FR-A840-00083(2.2K) to FR-A840-00250(7.5K): 1 s
FR-A820-00630(11K) to FR-A820-03160(55K), FR-A840-00310(11K) to FR-A840-01800(55K): 3.0 s
FR-A820-03800(75K) or higher and FR-A840-02160(75K) or higher: 5.0 s

POINT

- To operate the inverter with the automatic restart after instantaneous power failure function enabled, check the following points.
- Set **Pr.57 Restart coasting time** = "0".
- Turn the terminal CS (Selection of automatic restart after instantaneous power failure, flying start) ON.

上正科技有限公司
購買、維修 此手冊零組件
電話： 037-466333
Email: service@repairtw.com
Line id: @zzzz
www.repairtw.com

(A) Application parameters

(1) Automatic restart after instantaneous power failure function

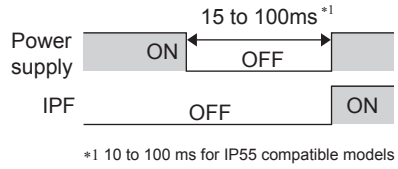

*1 10 to 100 ms for IP55 compatible models

- The inverter output is shut off at the activation of the instantaneous power failure protection (E.IPF) or undervoltage protection (E.UVT). (Refer to page 623 for E.IPF or E.UVT.)
- When E.IPF or E.UVT is activated, the instantaneous power failure (IPF)/undervoltage signal is output.
- The IPF signal is assigned to terminal IPF in the initial setting. To assign the IPF signal to a different terminal, set "2 (positive logic) or 102 (negative logic)" to any of **Pr.190 to Pr.196 (Output terminal function selection)**.
- When the automatic restart after instantaneous power failure function is selected, motor restarts at the power restoration after an instantaneous power failure or undervoltage. (E.IPF and E.UVT are not activated.)

(2) Connection (CS signal)

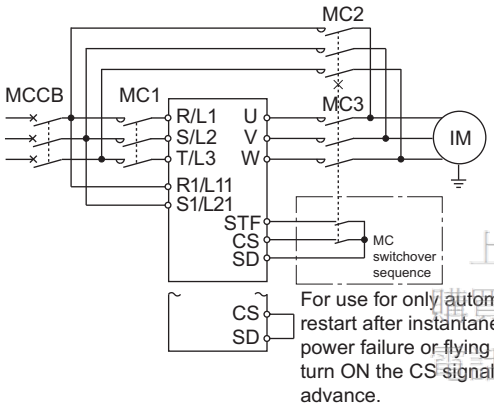

- Restart is enabled at turn-ON of the automatic restart after instantaneous power failure/flying start (CS) signal.
- The inverter operation is disabled at turn-OFF of the CS signal while **Pr.57 Restart coasting time** ≠"9999" (with restart).

上正科技有限公司
購買 維修 此手冊零組件
電話: 037-466333
Email: service@repairtw.com
Line id: @zzzz
www.repairtw.com

REMARKS

- The CS signal is assigned to terminal CS in the initial setting. By setting "6" to any of **Pr.178 to Pr.189 (input terminal function selection)**, the CS signal can be assigned to other terminals. Changing the terminal assignment using **Pr.178 to Pr.189** may affect other functions. Set parameters after confirming the function of each terminal.
- If the CS signal is not assigned to any input terminal, solely setting **Pr.57** will enable the restart operation at all times.

(3) Setting for the automatic restart after instantaneous power failure operation (Pr.162)

- The **Pr.162** settings and the instantaneous power failure automatic restart operation under each operation mode are as shown below.

Pr.162 setting	Restart operation	V/F control, Advanced magnetic flux vector control		Real sensorless vector control	Vector control	PM sensorless vector control
		Without encoder	With encoder			
0 (initial value)	At first start	Frequency search	Frequency search	Frequency search (reduced impact restart)	Encoder detection frequency search	Frequency search for PM motor (Refer to page 517)
1	At first start	Reduced voltage start	Reduced voltage start			
2	At first start	Frequency search	Encoder detection frequency search			
3	At first start	Frequency search (reduced impact restart)	Frequency search (reduced impact restart)			
10	At every start	Frequency search	Frequency search			
11	At every start	Reduced voltage start	Reduced voltage start			
12	At every start	Frequency search	Encoder detection frequency search			
13	At every start	Frequency search (reduced impact restart)	Frequency search (reduced impact restart)			

(4) Restart operation with frequency search (Pr.162 = "0, 3, 10, 13", Pr.299)

- When **Pr.162** = "0 (initial value, 3, 10, 13", the motor speed is detected at a power restoration so that the motor can re-start smoothly.
- The encoder also detects the rotation direction so that the motor can re-start smoothly even during the reverse rotation.
- Whether or not to detect the rotation direction can be selected by **Pr.299 Rotation direction detection selection at restarting**.
  If the motor capacity is different from the inverter capacity, set **Pr.299** = "0 (no rotation direction detection)".
- When the rotation direction is detected, the following operation is performed according to the **Pr.78 Reverse rotation prevention selection** setting.

Pr.299 setting	Pr.78 setting		
	0	1	2
9999	○	×	×
0 (initial value)	×	×	×
1	○	○	○

○: With rotation direction detection X: Without rotation direction detection

- By setting "3, 13" in **Pr.162**, the restart can be made smoother with even less impact than when "0, 10" is set in **Pr.162**. When the inverter is restarted with "3, 13" set to **Pr.162**, offline auto tuning is required. (For details on offline auto tuning of Advanced magnetic flux vector control and Real sensorless vector control, refer to page 428, and for details on offline auto tuning of V/F control, refer to page 519.)

V/F control, Advanced magnetic flux vector control

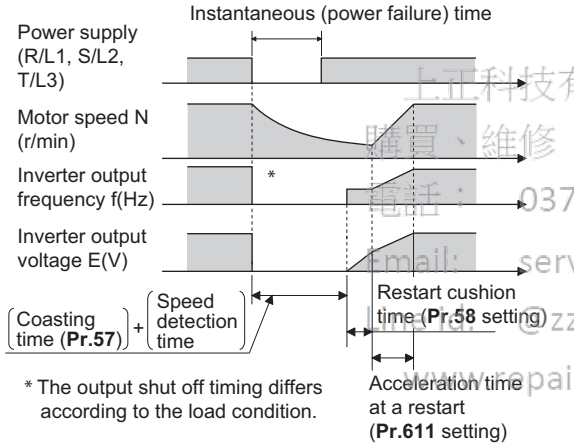

Real sensorless vector control

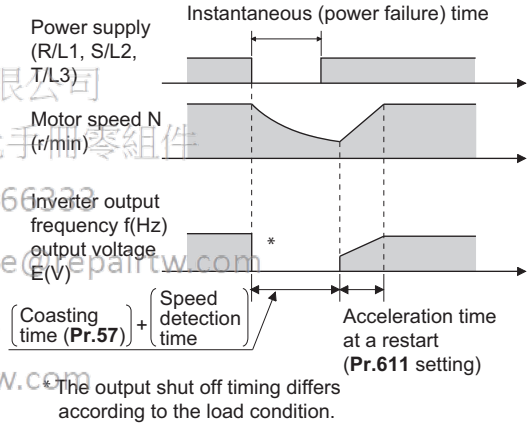

上正科技有限公司
購買、維修 此手冊零組件
電話：037-466333
Email: service@repairtw.com
Line id: @zzzz
www.repairtw.com

REMARKS

- The rotation speed detection time (frequency search) changes according to the rotation speed of the motor. (maximum 1 s)
- When the inverter capacity is two ranks or greater than the motor capacity, the overcurrent protective function (E.OC[]) is sometimes activated and prevents the inverter from restarting.
- If two or more motors are connected to one inverter, this function operates abnormally. (The inverter does not restart successfully.)
- Because a DC injection brake is applied instantaneously at speed detection during a restart, the speed might drop if the moment of inertia (J) of the load is small.
- If reverse operation is detected when "1" (reverse rotation disabled) is set to **Pr.78**, operation decelerates by reverse rotation and then changes to forward rotation when the start command is forward rotation. The inverter does not restart when the start command is reverse rotation.
- When "3, 13" is set to **Pr.162**, limit the wiring length to within 100 m.

(A) Application parameters

(5) Restart operation without frequency search (Pr.162 = "1, 11")

- When **Pr.162** = "1 or 11", reduced voltage start is used for the restart operation. In this method, the voltage is raised gradually while keeping the output frequency level at the level before the instantaneous failure, regardless of the motor's coasting speed.

V/F control, Advanced magnetic flux vector control

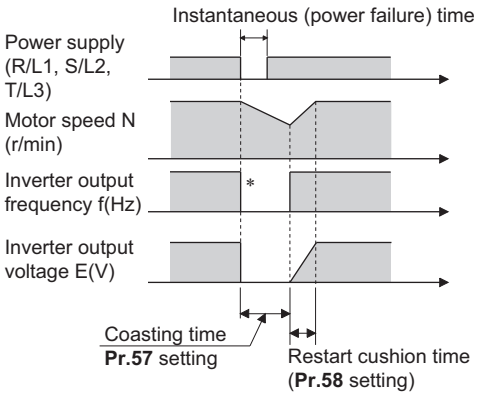

* The output shut off timing differs according to the load condition.

REMARKS

- This restart method uses the output frequency that was active before the instantaneous power failure stored in memory. If the instantaneous power failure time is 0.2 s or more, the output frequency can no longer be stored and held in memory, so the restart is performed from **Pr.13 Starting frequency**.
- During Real sensorless vector control, **Pr.162** is set to "3 or 13 (reduced impact restart).

(6) Restart operation with encoder detection frequency search (Pr.162 = "2, 12")

- When "2, 12" is set to **Pr.162** by encoder feedback control, the inverter is restarted by the motor speed and direction of rotation that were detected by the encoder at the power restoration.
- By encoder detection frequency search, the **Pr.299 Rotation direction detection selection at restarting** setting are invalid.

上正科技有限公司
購買、維修 此手冊零組件
電話: 037466233
Email: service@repairtw.com
Line id: @zzzz
www.repairtw.com

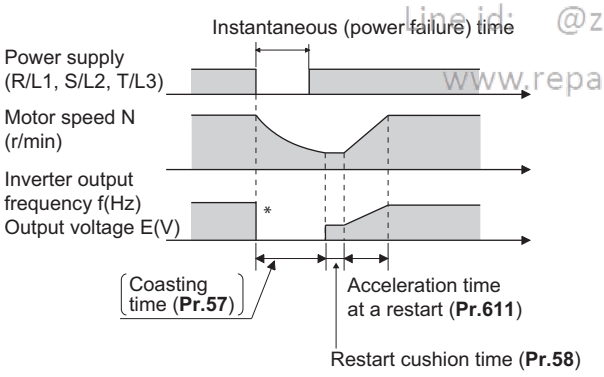

* The output shut off timing differs according to the load condition.

REMARKS

- If "2, 12" are set to **Pr.162** when encoder feedback control is invalid, the automatic restart is with a frequency search (**Pr.162** = "0, 10").
- In vector control, encoder detection frequency search is used regardless of the **Pr.162** setting. The **Pr.58** and **Pr.299** settings are invalid at this time.
- For the encoder feedback control, refer to page 603.

(7) Restart at every start (Pr.162 ="10 to 13")

- When "10 to 13" is set in **Pr.162**, a restart operation is performed at each start and automatic restart after instantaneous power failure (**Pr.57** start after the reset time has elapsed). When "0 (initial value) to 3" is set in **Pr.162**, a restart operation is performed at the first start after a power-ON, and from the second power-ON onwards, a start from the starting frequency is performed.

(8) Automatic restart operation of MRS (X10) signal

- The restart operation after turning from ON to OFF of the MRS (X10) signal is as shown in the table below according to the **Pr.30** setting.

Pr. 30 setting	Operation after turning OFF→ON→OFF of MRS or X10 signal
2, 10, 11, 102, 110, 111	Restart operation (starting from the coasting speed)
Other than the above	Starting from **Pr.13 Starting frequency**.

REMARKS

- When output is shut off using safety stop function (terminals S1 and S2), the inverter restarts in the same way as when output is shut off by MRS (X10) signal.

(9) Adjustment of restart coasting time (Pr.57)

- Coasting time is the time from the motor speed detection to the restart operation start.
- To enable restart operation, set "0" to **Pr.57 Restart coasting time**. If "0" is set to **Pr.57**, the coasting time is automatically set to the following value (Unit: s). Generally, this setting does not interfere with inverter operation.

Pr.570 setting	Pr.162 setting	200 V class FR-A820-[]																
		00046 (0.4K)	00077 (0.75K)	00105 (1.5K)	00167 (2.2K)	00250 (3.7K)	00340 (5.5K)	00490 (7.5K)	00630 (11K)	00770 (15K)	00930 (18.5K)	01250 (22K)	01540 (30K)	01870 (37K)	02330 (45K)	03160 (55K)	03800 (75K)	04750 (90K)
		400 V class FR-A840-[]																
		00023 (0.4K)	00038 (0.75K)	00052 (1.5K)	00083 (2.2K)	00126 (3.7K)	00170 (5.5K)	00250 (7.5K)	00310 (11K)	00380 (15K)	00470 (18.5K)	00620 (22K)	00770 (30K)	00930 (37K)	01160 (45K)	01800 (55K)	02160 (75K)	02600 (90K) or higher
0 (SLD) 1 (LD)	Other than 3, 13	0.5	0.5	1	1	1	1	3	3	3	3	3	3	3	3	5	5	5
	3, 13	1	1	2	2	2	2	3	3	3	3	3	3	3	3	5	5	5
2 (ND)	Other than 3, 13	0.5	0.5	0.5	1	1	1	1	3	3	3	3	3	3	3	3	5	5
	3, 13	1	1	1	2	2	2	2	3	3	3	3	3	3	3	3	5	5
3 (HD)	Other than 3, 13	0.5	0.5	0.5	0.5	1	1	1	1	3	3	3	3	3	3	3	3	5
	3, 13	1	1	1	1	2	2	2	2	3	3	3	3	3	3	3	3	5

上正科技有限公司
購買、維修 此手冊零組件
電話： 037-466333
Email: service@repairtw.com
Line id: @zzzz
www.repairtw.com

- Inverter operation is sometimes hindered by the size of the moment of inertia (J) of the load or running frequency. Adjust this coasting time within the range 0.1 s to 30 s to match the load specification.
- Set the waiting ti,e when the sine wave filter is used (**Pr.72 PWM frequency selection** = "25") to 3 s or more.

(10) Restart cushion time (Pr.58)

- The cushion time is the time takes to raise the voltage to the level required for the specified speed after the motor speed detection (output frequency before instantaneous power failure when **Pr.162** = "1 or 11").
- Normally, the motor runs at the initial value as it is. However, adjust to suit the moment of inertia (J) of the load or the size of the torque.
- **Pr.58** is invalid under Real sensorless vector control or vector control.

(11) Adjustment of restart operation (Pr.163 to Pr.165, Pr.611)

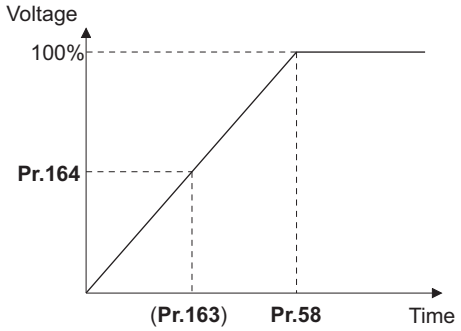

- The voltage cushion time at a restart can be adjusted by **Pr.163** and **Pr.164** as shown in the figure on the left.
- The stall prevention operation level at a restart operation can be set at **Pr.165**.
- Using **Pr.611**, the acceleration time to reach **Pr.20 Acceleration/deceleration reference frequency** after a restart operation can be set. This can be set individually from the normal acceleration time.

REMARKS

- **Pr.163** to **Pr.165** are invalid under Real sensorless vector control and vector control.
- Changing the **Pr.21** setting does not affect the **Pr.611** setting increment.
- Changing the terminal assignment using **Pr.178 to Pr.189 (input terminal function selection)** may affect the other functions. Set parameters after confirming the function of each terminal.
- When the restart operation is selected, undervoltage (E.UVT) and instantaneous power failure (E.IPF) of the fault output signals become invalid.
- The SU and FU signals are not output during the restart. These signals are output after the restart cushion time passes.
- Restart operation is also performed after the inverter reset is released or after the retry by the retry function occurs.
- The automatic restart after instantaneous power failure function is invalid when the load torque high-speed frequency control (**Pr.270** = "2, 3, 13") is set.

⚠ Caution

⚠ **Provide a mechanical interlock for MC1 and MC2. The inverter will be damaged if power supply is input to the inverter output section.**

⚠ **When the automatic restart after instantaneous power failure function is selected, the motor suddenly starts (after reset time passes) when an instantaneous power failure occurs. Stay away from the motor and machinery.**
Apply the supplied CAUTION stickers to easily visible places when automatic restart after instantaneous power failure has been selected.

♦ **Parameters referred to** ♦

Pr.7 Acceleration time, Pr.21 Acceleration/deceleration time increments ☞ page 278
Pr.13 Starting frequency ☞ page 291, page 292
Pr.65, Pr.67 to Pr.69 retry function ☞ page 332
Pr.78 Reverse rotation prevention selection ☞ page 314
Pr.178 to Pr.189 (input terminal function selection) ☞ page 416

上正科技有限公司
購買、維修 此手冊零組件
電話： 037-466333
Email: service@repairtw.com
Line id: @zzzz
www.repairtw.com

5.14.14 Automatic restart after instantaneous power failure/flying start with an IPM motor PM

When using the IPM motor MM-CF, the inverter operation can be restarted without stopping the motor operation.
When the automatic restart after instantaneous power failure function is selected, the motor driving is resumed in the following situations:

- When power comes back ON during inverter driving after an instantaneous power failure
- When the motor is coasting at start

Pr.	Name	Initial value	Setting range	Description
57 A702	**Restart coasting time**	9999	0	No coasting time
			0.1 to 30 s	Set the waiting time for the inverter to perform a restart after restoring power due to an instantaneous power failure.
			9999	No restart
162 A700	**Automatic restart after instantaneous power failure selection**	0	0, 1, 2, 3	Frequency search only performed at the first start
			10, 11, 12, 13	Frequency search at every start
611 F003	**Acceleration time at a restart**	9999	0 to 3600 s	Set the acceleration time to reach **Pr.20 Acceleration/ deceleration reference frequency** at restart.
			9999	Standard acceleration time (for example, **Pr.7**) is applied as the acceleration time at restart.

(1) Automatic restart after instantaneous power failure function

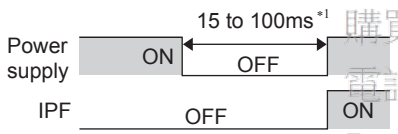

*1 10 to 100 ms for IP55 compatible models

- The inverter output is shut off at the activation of the instantaneous power failure protection (E.IPF) or undervoltage protection (E.UVT). (Refer to page 623 for E.IPF or E.UVT.)
- When E.IPF or E.UVT is activated, the instantaneous power failure/ undervoltage (IPF) signal is output.
- The IPF signal is assigned to terminal IPF in the initial status. By setting "2 (positive logic) or 102 (negative logic)" in any of **Pr.190 to Pr.196 (output terminal function selection)**, the IPF signal can be assigned to another terminal.
- When the automatic restart after instantaneous power failure function is selected, motor driving is resumed at the power restoration after an instantaneous power failure or undervoltage. (E.IPF and E.UVT are not activated.)

上正科技有限公司
購買、維修 此手冊委組件
電話： 037-466333
Email: service@repairtw.com
Line id: @zzzz
www.repairtw.com

(2) Connection (CS signal)

- Restart is enabled at turn-ON of the automatic restart after instantaneous power failure/flying start (CS) signal.
- The inverter operation is disabled at turn-OFF of the CS signal while **Pr.57 Restart coasting time** ≠"9999" (with restart).

REMARKS

- The CS signal is assigned to the CS terminal in the initial status.By setting "6" in any of **Pr.178 to Pr.189 (input terminal function selection)**, the signal can be assigned to another terminal. Changing the terminal assignment may affect other functions. Set parameters after confirming the function of each terminal.
- If the CS signal is not assigned to any input terminal, solely setting **Pr.57** will enable the restart operation at all times.
- If the restart operation is selected, instantaneous power failure protection (E.IPF) is disabled while the fault output signal is output at an instantaneous power failure.
- The SU and FU signals are not output during the restart. These signals are output after the restart cushion time passes.
- Restart operation is also performed after the inverter reset is released or after the retry by the retry function occurs.
- The automatic restart after instantaneous power failure function is invalid when the load torque high-speed frequency control (**Pr.270** = "2, 3, 13") is set.

(A) Application parameters

(3) Selection of restart operation (Pr.162)

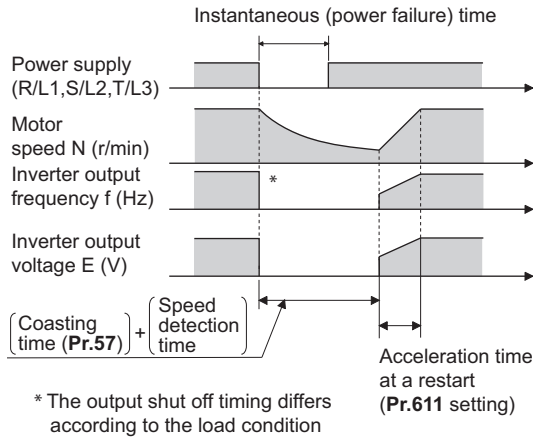

- At a power restoration, the encoder detects the motor speed by a frequency search so that the inverter can re-start smoothly.
- The encoder also detects the rotation direction so that the inverter can re-start smoothly even during the reverse rotation.
- Restart at every start
  When "10 (11, 12, 13)" is set in **Pr.162**, a restart operation is performed at each start and automatic restart after instantaneous power failure. When "0 (1, 2)" is set to **Pr.162**, a restart operation is performed at the first start after a power-ON, and from the second power-ON onwards, a start from the starting frequency is performed.

REMARKS

- Because a DC injection brake is applied instantaneously at speed detection during a restart, the speed might drop if the moment of inertia (J) of the load is small.
- Restart operation with reduced voltage is not available for PM sensorless vector control.

(4) Restart coasting time (Pr.57)

- The coasting time is the time up till detection of the motor speed and start of restart control.
- To enable restart operation, set "0" (no coasting time) in **Pr.57 Restart coasting time**. Generally, this setting does not interfere with inverter operation.
- Inverter operation is sometimes hindered by the size of the moment of inertia (J) of the load or running frequency. Adjust this coasting time within the range 0.1 s to 30 s to match the load specification.

上正科技有限公司
購買、維修此手冊零組件
電話: 037-466333
Email: service@repairtw.com
Line id: @zzzz
www.repairtw.com

(5) Adjustment of restart operation (Pr.611)

- Using **Pr.611**, the acceleration time to reach **Pr.20 Acceleration/deceleration reference frequency** after a restart operation can be set. This can be set individually from the normal acceleration time.

REMARKS

- Changing the **Pr.21 Acceleration/deceleration time increments** setting does not affect the **Pr.611** setting increment.
- An IPM motor is a motor with interior permanent magnets. Regression voltage is generated when the motor coasts at an instantaneous power failure or at a flying start. The inverter's DC bus voltage rises if the motor coasts fast or makes a flying start in this condition. When using the automatic restart after instantaneous power failure function (**Pr.57** ≠ "9999"), it is recommended to also use the regenerative avoidance function (**Pr.882 Regeneration avoidance operation selection** = "1") to make startups stable. If the overvoltage protective function (E.OV[]) still occurs with the regeneration avoidance function, also use the retry function (**Pr.67**).
- During PM sensorless vector control, the automatic restart after instantaneous power failure function operates only when an MM-CF IPM motor is connected
  When a built-in brake or a regeneration unit is used, the frequency search may not be available at 2200 r/min or higher.
  The restart operation cannot be performed until the motor speed drops to a frequency where the frequency search is available.

⚠ Caution

⚠ An IPM motor is a motor with interior permanent magnets. High voltage is generated at motor terminals while the motor is running.
Do not touch motor terminals and other parts until the motor stops to prevent an electric shock.

⚠ When the automatic restart after instantaneous power failure function is selected, the motor suddenly starts (after reset time passes) when an instantaneous power failure occurs.
Stay away from the motor and machinery.
Apply the supplied CAUTION stickers to easily visible places when automatic restart after instantaneous power failure has been selected.

♦ Parameters referred to ♦

Pr.13 Starting frequency ☞ page 291, page 292
Pr.65, Pr.67 to Pr.69 retry function ☞ page 332
Pr.78 Reverse rotation prevention selection ☞ page 314
Pr.178 to Pr.189 (input terminal function selection) ☞ page 416
Pr.882 Regeneration avoidance operation selection ☞ page 599

5.14.15 Offline auto tuning for a frequency search

V/F PM

During V/F control or when driving the IPM motor MM-CF, the accuracy of the "frequency search", which is used to detect the motor speed for the automatic restart after instantaneous power failure and flying start, can be improved.

Pr.	Name	Initial value	Setting range	Description
162 A700	Automatic restart after instantaneous power failure selection	0	0	Frequency search only performed at the first start
			1	Reduced voltage start only at the first start (no frequency search)
			2	Encoder detection frequency search
			3	Frequency search only performed at the first start (reduced impact restart)
			10	Frequency search at every start
			11	Reduced voltage start at every start (no frequency search)
			12	Encoder detection frequency search at every start
			13	Frequency search at every start (reduced impact restart)
298 A711	Frequency search gain	9999	0 to 32767	The offline auto tuning automatically sets the gain required for the frequency search.
			9999	Uses the constant value of Mitsubishi motor (SF-JR, SF-HR, SF-JRCA, SF-HRCA, MM-CF and so on).
560 A712	Second frequency search gain	9999	0 to 32767	The offline auto tuning automatically sets the gain required for the frequency search of the second motor.
			9999	Uses the constant value of Mitsubishi motor (SF-JR, SF-HR, SF-JRCA, SF-HRCA, MM-CF and so on).
96 C110	Auto tuning setting/status	0	0	No offline auto tuning.
			1, 101	Perform offline auto tuning for the Advanced magnetic flux vector control, Real sensorless vector control, and vector control. (Refer to page 428.)
			11	Performs offline auto tuning without rotating the motor (V/F control, PM sensorless vector control (IPM motor MM-CF)).
90 C120	Motor constant (R1)	9999	0 to 50 Ω, 9999*1	Tuning data (The value measured by offline auto tuning is automatically set.) 9999: Uses the constant value of Mitsubishi motor (SF-JR, SF-HR, SF-JRCA, SF-HRCA, MM-CF and so on).
			0 to 400 mΩ, 9999*2	
463 C210	Second motor auto tuning setting/status	0	0	No auto tuning for the second motor.
			1, 101	Performs offline auto tuning for the second motor.
			11	Performs offline auto tuning without rotating the motor (for IPM motor MM-CF).
458 C220	Second motor constant (R1)	9999	0 to 50 Ω, 9999*1	Tuning data of the second motor (same as **Pr.90**)
			0 to 400 mΩ, 9999*2	

*1 For the FR-A820-03160(55K) or lower and FR-A840-01800(55K)or lower.

*2 For the FR-A820-03800(75K) or higher and FR-A840-02160(75K)or higher.

上禾科技有限公司
購買、維修 此手冊零組件
電話： 037-466333
Email: service@repairtw.com
Line id: @zzzz
www.repairtw.com

(1) Offline auto tuning when performing a frequency search by V/F control (reduced impact restart)

- When the frequency search (reduced impact restart) is selected by setting **Pr.162 Automatic restart after instantaneous power failure selection** = "3 or 13", perform offline auto tuning.

(2) Before executing offline auto tuning

Check the following points before performing offline auto tuning:

- V/F control or PM sensorless vector control (IPM motor MM-CF) is selected.
- A motor is connected. (The motor should not be rotated by the external force applied from outside during the tuning.)

- The motor with the rated motor current equal to or less than the rated inverter current is used. (It must be 0.4 kW or higher.)
  If a motor with substantially low rated current compared with the rated inverter current is used, speed and torque accuracies may deteriorate due to torque ripples, etc. Set the rated motor current to about 40% or higher of the rated inverter current.
- The target motor is other than a high-slip motor, a high-speed motor, or a special motor.
- The motor may run slightly without actually turning during offline auto-tuning (**Pr.96 Auto tuning setting/status** = "11"), so either firmly secure the motor by the mechanical brake or check to see if turning the motor will cause any safety problems. (Attention is required for lifts, in particular.) The motor turning slightly will not affect tuning performance.
- Offline auto tuning is not performed correctly when the surge voltage suppression filter (FR-ASF-H/FR-BMF-H) and sine wave filter (MT-BSL/BSC) are inserted between the inverter and motor. Be sure to remove them before performing tuning.

(3) Setting

1) Set **Pr.96 Auto tuning setting/status** = "11".
2) Set the rated motor current (initial value is inverted rated current) to **Pr.9 Electronic thermal O/L relay**. (Refer to page 322.)
3) Set **Pr.71 Applied motor** according to the motor to be used.

Motor		Pr.71 setting
Mitsubishi standard motor Mitsubishi high-efficiency motor	SF-JR and SF-TH	0 (3, 4)
	SF-JR 4P 1.5 kW or lower	20 (23, 24)
	SF-HR	40 (43, 44)
	Others	0 (3, 4)
Mitsubishi constant-torque motor	SF-JRCA 4P SF-TH (constant-torque)	1 (13, 14)
	SF-HRCA	50 (53, 54)
	Other (SF-JRC, etc.)	1 (13, 14)
Mitsubishi high-performance energy-saving motor	SF-PR	70 (73, 74)
Other manufacturer's standard motor	-	0 (3, 4)
Other manufacturer's constant-torque motor	-	1 (13, 14)

上正科技有限公司
購買、維修 此手冊零組件
電話： 037-466333
Email: service@repairtw.com
Line id: @zzzz
www.repairtw.com

(4) Performing tuning

POINT

- Before performing tuning, check the monitor display of the operation panel (FR-DU08) or parameter unit (FR-PU07) if the inverter is in the state ready for tuning. Turning ON the start command while tuning is unavailable starts the motor.

- In the PU operation mode, press FWD/REV on the operation panel.
  For External operation, turn ON the start command (STF signal or STR signal). Tuning will start. (At this time, excitation noise occurs.)

REMARKS

- It takes about 10 seconds for tuning to complete. (The time depends on the inverter capacity and motor type.)
- Satisfy the required inverter start conditions to start offline auto tuning. For example, stop the input of MRS signal.
- To force tuning to end, use the MRS or RES signal or press [STOP RESET] on the operation panel.
  (Turning the start signal (STF signal or STR signal) OFF also ends tuning.)
- During offline auto tuning, only the following I/O signals are valid. (Initial value)
  •Input terminals <valid signals> STOP, OH, MRS, RT, RES, STF, STR, S1 and S2
  •Output terminals: RUN, OL, IPF, FM/CA, AM, A1B1C1 and SO
  •Note, however, that for AM and FM/CA output when rotation speed or output frequency is selected, the offline auto tuning progress state is output in 15 stages.
- During execution of offline auto tuning, do not switch the second function selection signal (RT) ON or OFF. Auto tuning is not executed properly.
- Since the RUN signal turns ON when tuning is started, caution is required especially when a sequence which releases a mechanical brake by the RUN signal has been designed
- When executing offline auto tuning, input the run command after switching ON the main circuit power (R/L1, S/L2, T/L3) of the inverter.
- While **Pr.79 Operation mode selection** = "7", turn the PU operation external interlock (X12) signal ON to tune in the PU operation mode.

• Monitor is displayed on the operation panel (FR-DU08) and parameter unit (FR-PU07) during tuning as below.

status	Parameter unit (FR-PU07) display	Operation panel (FR-DU08) display
Setting	READ:List 11 ---STOP PU	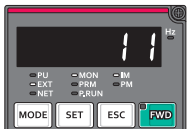
Tuning in progress	TUNE 12 STF FWD PU	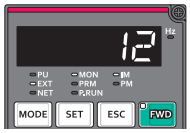
Normal end	TUNE 13 COMPLETION STF STOP PU	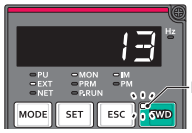 Flickering
Forced end	TUNE ERROR 8 --- STOP PU	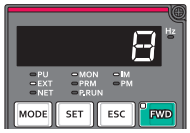

• When offline auto tuning ends, press STOP RESET on the operation panel during PU operation. For External operation, turn OFF the start signal (STF signal or STR signal).
This operation resets the offline auto tuning, and the PU's monitor display returns to the normal indication.
(Without this operation, next operation cannot be started.)

• At tuning completion, the tuning results are set in the following parameters:

Parameter	Name
90	Motor constant (R1)
298	Frequency search gain
96	Auto tuning setting/status

上正科技有限公司
購買、維修 此手冊零組件
電話：037-466333
Email：service@repairtw.com
Line id.：@zzzz
www.repairtw.com

REMARKS

• The motor constants measured once in the offline auto tuning are stored as parameters and their data are held until the offline auto tuning is performed again. However, the tuning data is cleared when performing all parameter clear.

• If offline auto tuning has ended in error (see the table below), motor constants are not set.
Perform an inverter reset and restart tuning.

Error display	Error cause	Countermeasures
8	Forced end	Set "11" to **Pr.96** and retry.
9	Inverter protective function operation	Make the setting again.
91	The current limit (stall prevention) function is activated.	Set the acceleration/deceleration time longer. Set **Pr.156 Stall prevention operation selection** = "1".
92	The converter output voltage fell to 75% of the rated value.	Check for the power supply voltage fluctuation.
93	Calculation error The motor is not connected.	Check the motor wiring and make the setting again.
94	Rotation tuning frequency setting error (The frequency command for the tuning was given to exceed the maximum frequency setting, or to be in the frequency jump range.)	Check the **Pr.1 Maximum frequency** and **Pr.31** to **Pr.36** Frequency jump settings.

- When tuning is ended forcibly by pressing STOP RESET or turning OFF the start signal (STF or STR) during tuning, offline auto tuning does not end properly. (The motor constants have not been set.)
  Perform an inverter reset and restart tuning.
- If using a motor falling under the following conditions, set the value of **Pr.9 Electronic thermal O/L relay** as shown below after tuning is complete.
  a)If the rated power supply of the motor is 200/220 V(400/440 V) 60 Hz, set the rated motor current multiplied by 1.1 in **Pr.9**.
  b)For a motor with a PTC thermistor, thermal protector or other thermal detection, set "0" (motor overheat protection by inverter invalid) in **Pr.9** to protect the motor from overheating.

REMARKS

- An instantaneous power failure occurring during tuning will result in a tuning error.
  After power is restored, the inverter goes into the normal operation. Therefore, when STF (STR) signal is ON, the motor runs in the forward (reverse) rotation.
- Any alarm occurring during tuning is handled as in the normal operation. Note that even if a retry operation has been set, retry is not performed.
- The set frequency monitor displayed during the offline auto tuning is 0 Hz.

(5) Tuning the second applied motor (Pr.463)

- When performing operation where two motors are switched between one inverter, set the second motor in **Pr.450 Second applied motor**, set **Pr.463 Second motor auto tuning setting/status** = "11", and perform tuning of the second motor.
- Turning ON the RT signal will enable the parameter settings for the second motor as shown below.

Function	RT signal ON (second motor)	RT signal OFF (first motor)
Motor constant (R1)	**Pr.458**	**Pr.90**
Auto tuning setting/status	**Pr.463**	**Pr.96**
Frequency search gain	**Pr.560**	**Pr.298**

友順科技有限公司
購買、維修此手冊零組件
電話： 037-466333
Email: service@repairtw.com
line id: @zzz
www.repairtw.com

REMARKS

- The RT signal is assigned to the terminal RT in the initial status. Set "3" in any of **Pr.178 to Pr.189 (input terminal function selection)** to assign the RT signal to another terminal.
- Changing the terminal assignment using **Pr.178 to Pr.189 (input terminal function selection)** may affect the other functions. Set parameters after confirming the function of each terminal.

⚠ Caution

Note that the motor may start running suddenly.

For the offline auto tuning in vertical lift applications, etc., caution is required to avoid falling due to insufficient torque.

♦ Parameters referred to ♦

Pr.9 Electronic thermal O/L relay ☞page 322
Pr.65, Pr.67 to Pr.69 retry function ☞page 332
Pr.71 Applied motor ☞page 424
Pr.79 Operation mode selection ☞
Pr.156 Stall prevention operation selection ☞page 336
Pr.178 to Pr.189 (input terminal function selection) ☞page 416

5.14.16 Power failure time deceleration-to-stop function

At instantaneous power failure or undervoltage, the motor can be decelerated to a stop or to the set frequency for the re-acceleration.

Pr.	Name	Initial value FM	Initial value CA	Setting range	Description
261 A730	**Power failure stop selection**	0		0	Power failure time deceleration-to-stop function disabled
				1, 2, 11, 12, 21, 22	Power failure time deceleration-to-stop function enabled Select action at an undervoltage or when an power failure occurs.
262 A731	**Subtracted frequency at deceleration start**	3 Hz		0 to 20 Hz	Normally, the motor runs at the initial value as it is. However, adjust to suit the size of the load specification (moment of inertia, torque).
263 A732	**Subtraction starting frequency**	60 Hz	50 Hz	0 to 590 Hz	When output frequency ≥ **Pr.263** Output frequency - deceleration from **Pr.262** When output frequency < **Pr.263** Deceleration from output frequency
				9999	The motor decelerates from the "output frequency - **Pr.262**".
264 A733	**Power-failure deceleration time 1**	5 s		0 to 3600/ 360 s*1	Set the slope applicable from the deceleration start to the **Pr.266** set frequency.
265 A734	**Power-failure deceleration time 2**	9999		0 to 3600/ 360 s*1	Set the slope applicable for the frequency range starting at **Pr.266** and downward.
				9999	Same as **Pr.264**.
266 A735	**Power failure deceleration time switchover frequency**	60 Hz	50 Hz	0 to 590 Hz	Set the frequency at which the slope during deceleration switches from the **Pr.264** setting to the **Pr.265** setting.
294 A785	**UV avoidance voltage gain**	100%		0 to 200%	Adjust the response at undervoltage avoidance operation. Setting a large value improves the response to changes in the bus voltage.
668 A786	**Power failure stop frequency gain**	100%		0 to 200%	Adjust the response level for the operation where the deceleration time is automatically adjusted.

*1 When the **Pr.21 Acceleration/deceleration time increments** setting is "0" (initial value), the setting range is "0 to 3600 s" and the setting increment is "0.1 s", and when it is "1", the setting range is "0 to 360 s" and the setting increment is "0.01 s".

上正科技有限公司
購買、維修、此手冊零組件
電話： 037-466333
Email: service@repairtw.com
Line Id: @2222
www.repairtw.com

(1) Connection and parameter setting

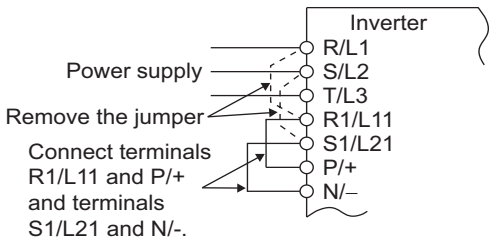

- Remove the jumpers across terminal R/L1-R1/L11 and terminal S/L2-S1/L21, and connect terminal R1/L11 to terminal P/+, and terminal S1/L21 to terminal N/-.
- If an undervoltage, power failure or input phase loss occurs when **Pr.261 Power failure stop selection** ≠ "0", the motor decelerates to a stop.
- The power failure time deceleration stop function operates as follows at an input phase loss.

Pr.261	Pr.872	Operation at power failure
0	0	Coast to stop
	1	Input phase loss (E.ILT)
1, 2	0	Coast to stop
	1	Deceleration stop
21, 22	—	Deceleration stop

(2) Outline of operation of deceleration stop at a power failure

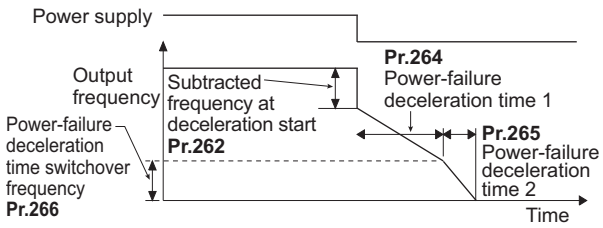

- If an undervoltage or power failure occurs, the output frequency is turned OFF only for the frequency set to **Pr.262 Subtracted frequency at deceleration start**.
- The motor decelerates for the time set to **Pr.264 Power-failure deceleration time 1**. (The deceleration time setting is the time it takes for the motor to stop from **Pr.20 Acceleration/ deceleration reference frequency**.)
- Change the deceleration time (slope) to stop using **Pr.265 Power-failure deceleration time 2** when the frequency is too low to obtain the regenerative energy or in other instances.

(3) Action setting at undervoltage and power failure

- Set **Pr.261** to select the action at an undervoltage and power failure.

Pr.261 Setting	Action at undervoltage and power failure	Power restoration during deceleration at occurrence of power failure	Deceleration stop time	Undervoltage avoidance function
0	Coasts to stop	Coasts to stop	—	—
1	Deceleration stop	Deceleration stop	According to **Pr.262** to **Pr.266** setting	Not used
2		Re-acceleration		Not used
11		Deceleration stop		With
12		Re-acceleration		With
21		Deceleration stop	Automatic adjustment of deceleration time	Not used
22		Re-acceleration		Not used

上正科技有限公司
購買、維修 此手冊零組件
電話： 037-466399
Email: service@repairtw.com
Line id: @zzzz
www.repairtw.com

(4) Power failure stop function (Pr.261 ="1, 11, 21")

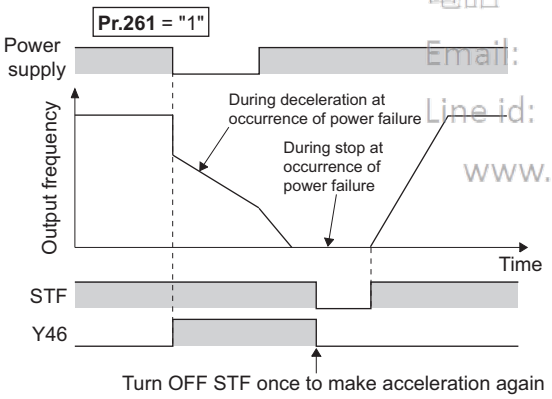

- Even if power is restored during deceleration triggered by a power failure, deceleration stop is continued after which the inverter stays stopped. To restart operation, turn the start signal OFF then ON again.

REMARKS

- If the automatic restart after instantaneous power failure is selected (**Pr.57 Restart coasting time** ≠ "9999") while the power failure time deceleration stop function is set enabled (**Pr.261** = "1, 11, or 21"), the power failure time deceleration stop function is disabled.
- When the power failure time deceleration stop function is enabled (**Pr.261** = "1, 11 or 21"), the inverter will not start even if the power is turned ON or inverter reset is performed with the start signal (STF/STR) ON. Turn OFF the start signal once and then ON again to make a start.

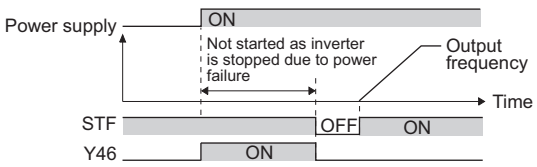

(5) Continuous operation function at instantaneous power failure (Pr.261 ="2, 12, 22")

- The motor re-accelerates to the set frequency if the power restores during the deceleration to stop.
- Combining with the automatic restart after instantaneous power failure function enables a power failure time deceleration stop and re-acceleration at a power restoration.
  If the power is restored after stoppage by a power failure, a restart operation is performed when automatic restart after instantaneous power failure (**Pr.57** ≠ "9999") is selected.

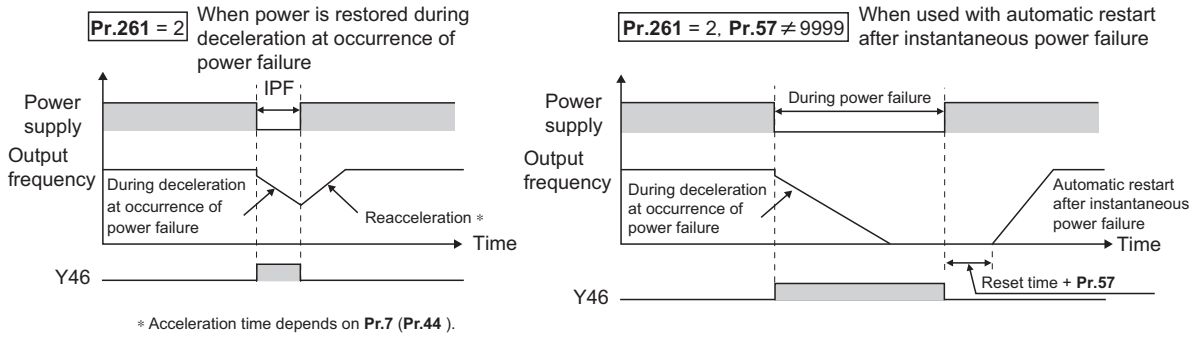

* Acceleration time depends on **Pr.7** (**Pr.44**).

(6) Undervoltage avoidance function (Pr.261 = "11, 12" Pr.294)

- If "11, 12" is set to **Pr.261**, the deceleration time is adjusted (shortened) to prevent an undervoltage from occurring during deceleration at occurrence of power failure.
- Adjust the downward frequency slope and the response level using **Pr.294 UV avoidance voltage gain**. Setting a large value improves the response to the bus voltage.

REMARKS

- The undervoltage avoidance function is invalid under torque control by Real sensorless vector control. When "11 (12)" is set to **Pr.261**, operation is the same as when "1 (2) is set to **Pr.261**.

上正科技有限公司
購買、維修 此手冊零組件
電話： 037-466333
Email: service@repairtw.com
Line Id: @2222

(7) Automatic adjustment of deceleration time (Pr.261 ="21, 22", Pr.294, Pr.668)

- When "21, 22" is set to **Pr.261**, the deceleration time is automatically adjusted to keep (DC bus) voltage constant in the converter when the motor decelerates to a stop at a power failure. Setting of **Pr.262 to Pr.266** is not required.
- If a phenomenon such as motor vibration occurs during operation of the deceleration time automatic adjustment function, adjust the response level by setting the **Pr.668 Power failure stop frequency gain**. Increasing the setting improves the response to change in the bus voltage. However, the output frequency may become unstable.
- If setting **Pr.294 UV avoidance voltage gain** lower also does not suppress the vibration, set **Pr.668** lower.

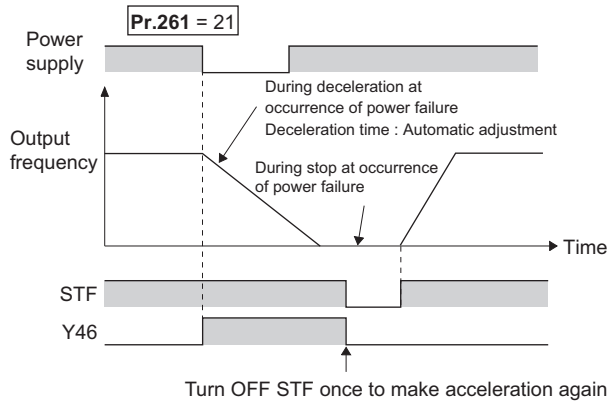

(8) During deceleration at occurrence of power failure signal (Y46)

- After deceleration by a power failure, the inverter is not restarted even though the start command is input. Check the during deceleration at occurrence of power failure signal (Y46) at a power failure. (for example, when input phase loss protection (E.ILF) occurs)
- The Y46 signal is turned ON during deceleration at occurrence of power failure and in a stop status after deceleration at occurrence of power failure.
- For the Y46 signal, assign the function by setting "46 (forward action)" or "146 (reverse action)" in any of **Pr.190 to Pr.196 (Output terminal function selection)**.

REMARKS

- When "2" is set to **Pr.30 Regenerative function selection** (for instance, when FR-HC2, FR-CV is used), the deceleration stop function is invalid at a power failure.
- If the "output frequency - **Pr.262**" at undervoltage or at power failure is a negative value, it is regarded as 0 Hz. (DC injection brake operation is performed without deceleration.)
- The power failure time deceleration stop function is disabled during a stop or when the breaker is tripped.
- The Y46 signal turns ON if an undervoltage occurs even if a deceleration at a power failure has not occurred. For this reason, the Y46 signal is sometimes output instantaneously when the power supply is turned OFF. This is not a fault.
- When the power failure time deceleration stop function is selected, undervoltage protection (E.UVT), instantaneous power failure protection (E.IPF) and input phase loss protection (E.ILF) are not invalid.
- When the load is high during PM sensorless vector control, an undervoltage sometimes causes the inverter to coast to a stop.
- Changing the terminal assignment using **Pr.190 to Pr.196 (output terminal function selection)** may affect the other functions. Set parameters after confirming the function of each terminal.

⚠ Caution

⚠ **Even if the power failure time deceleration stop function is set, some loads might cause the inverter to trip and the motor to coast.**
The motor will coast if sufficient regenerative power is not obtained from the motor.

♦ **Parameters referred to** ♦

Pr.12 DC injection brake operation voltage ☞page 584
Pr.20 Acceleration/deceleration reference frequency, Pr.21 Acceleration/deceleration time increments ☞page 278
Pr.30 Regenerative function selection ☞page 593
Pr.57 Restart coasting time ☞page 511, page 517
Pr.190 to Pr.196 (output terminal function selection) ☞page 370
Pr.872 Input phase loss protection selection ☞page 331

上新科技有限公司
購買、維修 此手冊零組件
電話： 037-466333
Email: service@repairtw.com
Line id: @zzzz
www.repairtw.com

5.14.17 PLC function

The inverter can be run in accordance with a sequence program.
In accordance with the machine specifications, a user can set various operation patterns: inverter movements at signal inputs, signal outputs at particular inverter statuses, and monitor outputs, etc.

Pr.	Name	Initial value	Setting range	Description	
414 A800	PLC function operation selection	0	0	PLC function disabled	
			1	PLC function enabled	The SQ signal is enabled by input from a command source (external input terminal/ communication).
			2		The SQ signal is enabled by input from an external input terminal.
415 A801	Inverter operation lock mode setting	0	0	The inverter start command is enabled regardless of the operating status of the sequence program.	
			1	The inverter start command is enabled only while the sequence program is running.	
416 A802	Pre-scale function selection	0	0 to 5	Unit scale factor 0: No function 1: ×1 2: ×0.1 3: ×0.01 4: ×0.001 5: ×0.0001	When the pulse train is input from terminal JOG, the number of sampled pulses can be converted. The result of conversion is stored to SD1236. "Number of sampled pulses" = "input pulse value per count cycle" × "pre-scale setting value **(Pr.417)**" × "unit scale factor **(Pr.416)**"
417 A803	Pre-scale setting value	1	0 to 32767	Pre-scale setting value	
498 A804	PLC function flash memory clear	0	0 to 9999	9696: Memory is cleared to delete the sequence program.	
				Other than 9696: No action	
1150 to 1199 A810 to A859	User parameters 1toUser parameters 50	0	0 to 65535	Desired values can be set. Because devices D206 to D255 used by the PLC function can be mutually accessed, the values set to **Pr.1150 to Pr.1199** can be used by the sequence program. The result of performing calculation by a sequence program can also be monitored by **Pr.1150 to Pr.1199**.	

上正科技有限公司
購買、維修 此手冊零組件
電話： 037-466384
Email: service@repairtw.com
Line id: @zzzz
www.repairtw.com

(1) Outline of PLC function

- To enable the PLC function, set "1" or "2" in **Pr.414 PLC function operation selection**. When "2" is set in **Pr.414**, the sequence startup (SQ) signal from the external input terminal is valid regardless of the setting of the **Pr.338 Communication operation command source**.
- Switch the execution key (RUN/STOP) of the sequence program by turning the SQ signal ON/OFF. The sequence program can be executed by turning the SQ signal ON. To input the SQ signal, set "50" in any of **Pr.178 to Pr.189 (input terminal function selection)** to assign the function to a terminal.
- When "1" is set in **Pr.415 Inverter operation lock mode setting**, the inverter can be operated only when the sequence program is running. By changing the PLC program status from RUN to STOP during inverter operation, the motor decelerates to stop.
  To stop the inverter operation at the STOP status of the PLC program while performing auto operation using SD1148 (or SM1200 to 1211) of the PLC program, set **Pr.415** = "1".
- To write sequence programs, use FR Configurator2 on a personal computer connected to the inverter through RS-485 communication or USB.

REMARKS

- For the details of the PLC function, refer to the FR-A800 PLC Function Programming Manual and [[IB(NA)-0600492ENG] and the Instruction Manual of FR Configurator2.

(A) Application parameters

(2) Copying the PLC function project data to USB memory

- This function copies the PLC function project data to a USB memory device.
  The PLC function project data copied in the USB memory device can be copied to other inverters.
  This function is useful in backing up the parameter setting and for allowing multiple inverters to operate by the same sequence programs.
- Refer to page 60 for an outline of the USB communication function.

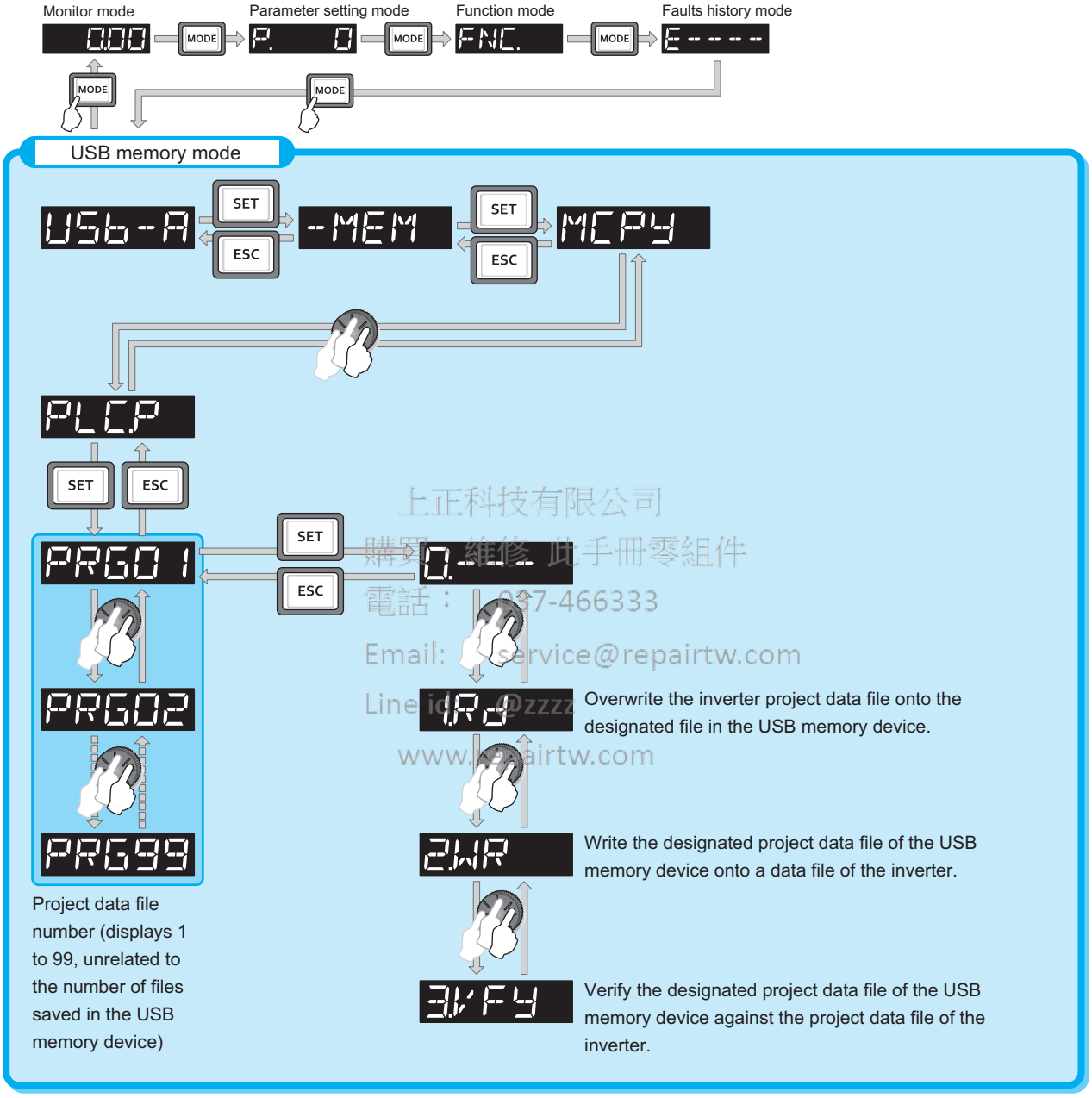

- The following data can be copied by copying the project data via USB memory.

Extension	File type	Copy from inverter to USB memory	Copy from USB memory to inverter
.QPA	Parameter file	Supported	Supported
.QPG	Program file	Supported	Supported
.C32	Function block source information	Supported	Supported
.QCD	Global text comment information	Supported	Supported
.DAT	Project management information	Supported	Not available
.TXT	Copy information	Supported	Not available

上正科技有限公司
購買、維修 此手冊零組件
電話： 07-466333
Email: service@repairtw.com
www.repairtw.com

REMARKS

- If the project data of the PLC function is locked with a password using FR Configurator 2, copying to the USB memory device and verification are disabled. Also if set to write-disabled, writing to the inverter is disabled.For the details of the PLC function, refer to the FR-A800 PLC Function Programming Manual and [[IB(NA)-0600492ENG] and the Instruction Manual of FR Configurator 2.

♦ Parameters referred to ♦

Pr.338 Communication operation command source ☞page 308

5.14.18 Trace function

- The operating status of the inverter can be traced and saved on a USB memory device.
- Saved data can be monitored by FR Configurator 2, and the status of the inverter cam be analyzed.

Pr.	Name	Initial value	Setting range	Description
1020 A900	Trace operation selection	0	0	Without trace operation
			1	Sampling start
			2	Forced trigger
			3	Sampling stop
			4	Transfer of data to USB memory divice
1021 A901	Trace mode selection	0	0	Memory mode
			1	Memory mode (automatic transfer)
			2	Recorder mode
1022 A902	Sampling cycle	2	0 to 9	Set the sampling cycle. 0: 0.125 ms, 1: 0.252 ms, 2: 1 ms, 3: 2 ms, 4: 5 ms, 5: 10 ms, 6: 50 ms, 7: 100 ms, 8: 500 ms, 9: 1 s (Regarding the setting value "0 and 1", the cycle varies by the control mode.)
1023 A903	Number of analog channels	4	1 to 8	Select the number of analog channels to be sampled.
1024 A904	Sampling auto start	0	0	Manual sampling start
			1	Sampling starts automatically when the power supply is turned ON or at a reset
1025 A905	Trigger mode selection	0	0	Fault trigger
			1	Analog trigger
			2	Digital trigger
			3	Analog or digital trigger (OR logic)
			4	Both analog and digital trigger (AND logic)
1026 A906	Number of sampling before trigger	0 to 100%	90%	Set the percentage of the pre-trigger sampling time with respect to the overall sampling time.
1027 A910	Analog source selection (1ch)	201	1 to 3, 5 to 14, 17 to 20, 22 to 24, 32 to 35, 40 to 42, 52 to 54, 61, 62, 64, 67, 87 to 98, 201 to 213, 230 to 232, 235 to 238	Select the analog data (monitor) to be sampled on each channel.
1028 A911	Analog source selection (2ch)	202		
1029 A912	Analog source selection (3ch)	203		
A1030 A913	Analog source selection (4ch)	204		
1031 A914	Analog source selection (5ch)	205		
1032 A915	Analog source selection (6ch)	206		
1033 A916	Analog source selection (7ch)	207		
1034 A917	Analog source selection (8ch)	208		
1035 A918	Analog trigger channel	1	1 to 8	Select the analog channel to be the trigger.

上正科技有限公司
購買、維修 此手冊適用
電話: 037-486383
Email: service@repairtw.com
Line id: @zzzz
www.repairtw.com

(A) Application parameters

Pr.	Name	Initial value	Setting range	Description
1036 A919	**Analog trigger operation selection**	0	0	Sampling starts when the value of the analog monitor exceeds the value set at the trigger level (**Pr.1037**)
			1	Sampling starts when the value of the analog monitor falls below the value set at the trigger level (**Pr.1037**)
1037 A920	**Analog trigger level**	1000	600 to 1400	Set the level at which the analog trigger turns ON. The trigger level is the value obtained by subtracting 1000 from the set value.
1038 A930	**Digital source selection (1ch)**	1	1 to 255	Select the digital data (I/O signal) to be sampled on each channel.
1039 A931	**Digital source selection (2ch)**	2		
1040 A932	**Digital source selection (3ch)**	3		
1041 A933	**Digital source selection (4ch)**	4		
1042 A934	**Digital source selection (5ch)**	5		
1043 A935	**Digital source selection (6ch)**	6		
1044 A936	**Digital source selection (7ch)**	7		
1045 A937	**Digital source selection (8ch)**	8		
1046 A938	**Digital trigger channel**	1	1 to 8	Select the digital channel to be the trigger.
1047 A939	**Digital trigger operation selection**	0	0	Trace starts when the signal turns ON
			1	Trace starts when the signal turns OFF

上正科技有限公司
購買、維修 此手冊零組件
電話： 037-466838
Email: service@repairtw.com
Line id: @zzzz
www.repairtw.com

(1) Operation outline

- This function samples the status (analog monitor and digital monitor) of the inverter, traces the sampling data when a trigger (trace start condition) is generated, and saves the resulting trace data.
- When the trace function is set enabled, samplings are collected and the inverter goes into the pre-trigger status.
- In the pre-trigger status, samples are collected, and the trigger standby status is entered when sufficient samples for the number of pre-trigger samples have been collected.
- When the trigger is generated in the trigger standby status, the trace is started and the trace data is saved.

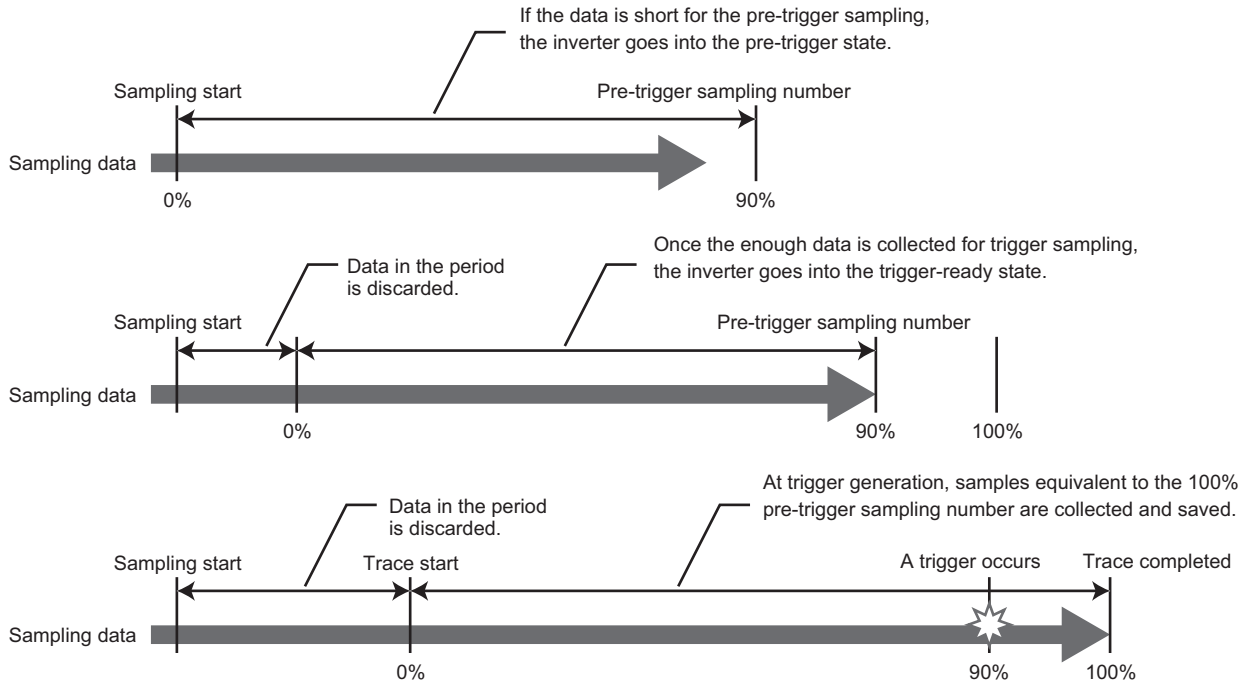

(2) Selection of trace mode (Pr.1021)

- Select how to save the trace data which results from sampling the inverter status.
- There are two trace data save methods, memory mode and recorder mode.

Pr.1021 setting	Mode	Description
0	Memory mode	In this mode, trace data is saved sequentially to internal RAM on the inverter. If automatic transfer is set, the trace data in internal RAM is transferred to USB memory device when the trigger is being generated. Data can be transferred to a USB memory device as long as data is held in internal RAM. Trace data in internal RAM is cleared when the power supply is turned OFF or when the inverter is reset.
1	Memory mode (automatic transfer)	
2	Recorder mode	In this mode, trace data is saved directly to USB memory device. Sampling data is fixed at eight analog channels and eight digital channels. The sampling cycle in this mode is longer than in the memory mode. (1 ms or longer)

REMARKS

- When the trace function is used in the recorder mode, use a USB memory device having at least 1 GB of free space.
- Data transferred to USB is saved in the "TRC" folder under the "FR_INV" folder.
- Up to 99 sets of trace data can be saved in the USB memory device. When data transfer to USB memory device reaches 99 sets of trace data, data is successively overwritten starting with the older data.

(3) Setting of sampling cycle (interval) and number of sampling channels (Pr.1022, Pr.1023)

- Set the sampling cycle (interval).
  The shortest cycle in the recorder mode is 1 ms. When the recorder mode is set, sampling is performed at a sampling cycle of 1 ms even if "0, 1" is set to **Pr.1022 Sampling cycle**.
- When the memory mode is set, the number of analog channels to sample can be set in the **Pr.1023 Number of analog channels**. Start setting from the smaller channel number. Up to eight channels can be set. The sampling time becomes shorter the more channels are set.
  The number of channels is always 8 when the recorder mode is used or when digital channels are used.
- The sampling time differs according to the sampling cycle and number of sampling channels.

工控科技有限公司
購買、維修 此手冊零組件
電話： 037-466333
Email: service@repairtw.com
Line id: @xzzz
www.repairtw.com

Number of channels	Memory mode sampling time	
	Minimum (Pr.1022 = "0")	Maximum (Pr.1022 = "9")
1	213 ms	1704 s
2	160 ms	1280 s
3	128 ms	1024 s
4	106.5 ms	852 s
5	91.8 ms	728 s
6	80.0 ms	640 s
7	71.8 ms	568 s
8	60 ms	512 s

(A) Application parameters

(4) Analog source (monitored item) selection

- Select the analog sources (monitored items) to be set to **Pr.1027** to **Pr.1034** from the table below.

Setting value	Monitored item*1	Minus sign display*2	Trigger level criterion*3
1	Output frequency/speed		*4
2	Output current		*4
3	Output voltage		*4
5	Frequency setting value/speed setting		*4
6	Running speed		*4
7	Motor torque		*4
8	Converter output voltage		*4
9	Regenerative brake duty		*4
10	Electronic thermal O/L relay load factor		*4
11	Output current peak value		*4
12	Converter output voltage peak value		*4
13	Input power		*4
14	Output power		*4
17	Load meter		*4
18	Motor excitation current		*4
19	Position pulse		65535
20	Cumulative energization time		65535
22	Orientation status		65535
23	Actual operation time		65535
24	Motor load factor		*4
32	Torque command		*4
33	Torque current command		*4
34	Motor output		*4
35	Feedback pulse		65535
40	PLC function user monitor 1	○	*4
41	PLC function user monitor 2	○	*4
42	PLC function user monitor 3	○	*4
52	PID set point		*4
53	PID measured value		*4
54	PID deviation	○	*4
61	Motor thermal load factor		*4
62	Inverter thermal load factor		*4
64	PTC thermistor resistance		**Pr.561**
67	PID measured value 2		*4
87	Remote output value 1	○	*4
88	Remote output value 2	○	*4
89	Remote output value 3	○	*4
90	Remote output value 4	○	*4

Setting value	Monitored item*1	Minus sign display*2	Trigger level criterion*3
91	PID manipulated variable	○	*4
92	Second PID set point		*4
93	Second PID measured value		*4
94	Second PID deviation	○	*4
95	Second PID measured value 2		*4
96	Second PID manipulated variable	○	*4
97	Dancer main speed setting		*4
98	Control circuit temperature	○	*4
201	*Output frequency		**Pr.84**
202	*U Phase Output Current	○	ND rated current
203	*V Phase Output Current	○	ND rated current
204	*W Phase Output Current	○	ND rated current
205	*Converter Output Voltage		400 V/800 V
206	*Output Current (all three phases)		ND rated current
207	*Excitation Current(A)		ND rated current
208	*Torque Current(A)		ND rated current
209	Terminal 2		100%
210	Terminal 4		100%
211	Terminal 1	○	100%
212	*Excitation Current (%)	○	100%
213	*Torque Current (%)	○	100%
222	Position command		65535
223	Position command (upper digits)	○	65535
224	Current position		65535
225	Current position (upper digits)	○	65535
226	Droop puls		65535
227	Droop pulse (upper digits)	○	65535
230	*Output Frequency (signed)	○	**Pr.84**
231	*Motor Speed	○	*5
232	*Speed Command	○	*5
235	*Torque Command	○	100%
236	*Motor Torque	○	100%
237	*Excitation Current Command	○	100%
238	*Torque Current Command	○	100%

上誠科技有限公司
購買、維修 此手冊零組件
電話： 037-433633
Email: service@epaitw.com
Line id: @zzz
www.repairtw.com

1 "" shows a monitored item with a high-speed sampling cycle.
*2 "O" shows that the display with a minus sign is available.
*3 Indicates a criterion at 100% when the analog trigger is set.
*4 Refer to Terminal FM, CA, AM Full-scale value (page 357).
*5 Rated motor frequency × 120 / number of motor poles

(5) Digital source (monitored item) selection

- Select the digital sources (input/output signals) to be set to **Pr.1038 to Pr.1045** from the table below. When a value other than the below, 0 (OFF) is applied for display.

Setting value	Signal name	Remarks
0	—	—
1	STF	For the details of the signals, refer to page 416.
2	STR	
3	AU	
4	RT	
5	RL	
6	RM	
7	RH	
8	JOG	
9	MRS	
10	STOP	
11	RES	
12	CS	
21	X0	For the details of the signals, refer to the Instruction Manual of FR-A8AX (option).
22	X1	
23	X2	
24	X3	
25	X4	
26	X5	
27	X6	
28	X7	
29	X8	
30	X9	
31	X10	
32	X11	
33	X12	
34	X13	
35	X14	
36	X15	
37	DY	

Setting value	Signal name	Remarks
101	RUN	For the details of the signals, refer to page 370.
102	SU	
103	IPF	
104	OL	
105	FU	
106	ABC	
107	ABC2	
121	DO0	For the details of the signals, refer to the Instruction Manual of FR-A8AY (option).
122	DO1	
123	DO2	
124	DO3	
125	DO4	
126	DO5	
127	DO6	
128	RA1	For the details of the signals, refer to the Instruction Manual of FR-A8AR (option).
129	RA2	
130	RA3	

上正科技有限公司
購買、維修 此手冊零組件
電話： 037-466333
Email: service@repairtw.com
Line id: @zzzz
www.repairtw.com

(6) Trigger setting (Pr.1025, Pr.1035 to Pr.1037, Pr.1046, Pr.1047)

- Set the trigger generating conditions and trigger target channels.

Pr.1025 setting	Trigger generating conditions	Selection of trigger target channel
0	Trace starts when inverter enters an fault status (protective function activated)	—
1	Trace starts when analog monitor satisfies trigger conditions	**Pr.1035**
2	Trace starts when digital monitor satisfies trigger conditions	**Pr.1046**
3	Trace starts when either of analog or digital monitor satisfies trigger conditions (OR)	**Pr.1035, Pr.1046**
4	Trace starts when both of analog or digital monitor satisfies trigger conditions (AND)	**Pr.1035, Pr.1046**

- Set the trigger generation conditions for the analog monitor.

Pr.1036 setting	Trigger generation conditions	Trigger level setting
0	Sampling starts when the analog data targeted for the trigger exceeds the value specified at the trigger level	Set the trigger level by **Pr.1037** (-400% to 400%)*1
1	Sampling starts when the analog data targeted for the trigger has fallen below the value specified at the trigger level	

*1 For **Pr.1037**, set the number obtained by adding 1,000 to the trigger level.

- Set the trigger generation conditions for the digital monitor.

Pr.1047 setting	Trigger generation conditions
0	Trace starts when the digital data targeted for the trigger turns ON
1	Trace starts when the digital data targeted for the trigger turns OFF

(A) Application parameters

(7) Start of sampling and copying of data (Pr.1020, Pr.1024)

- Set the trace operation. The trace operation is set by one of two ways, by setting **Pr.1020 Trace operation selection** and by setting in the trace mode on the operation panel.
- When "1" is set in **Pr.1020**, sampling is started.
- When "2" is set in **Pr.1020**, a trigger is regarded as having been generated (for instance, a forced trigger), sampling is stopped and the trace is started.
- When "3" is set in **Pr.1020**, sampling is stopped.
- When "4" is set in **Pr.1020**, the trace data in internal RAM is transferred to a USB memory device. (Trace data cannot be transferred during sampling.)
- To automatically start sampling when the power supply is turned ON or at a recovery after an inverter reset, set "1" to **Pr.1024 Sampling auto start**.

Pr.1020 setting	Setting by trace mode	Operation
0	0---	Sampling standby
1	1RUN	Sampling start
2	2TRG	Forced trigger (sampling stop)
3	3END	Sampling stop
4	4CPY	Data transmission

- Trace operation can also be set in the trace mode on the operation panel.

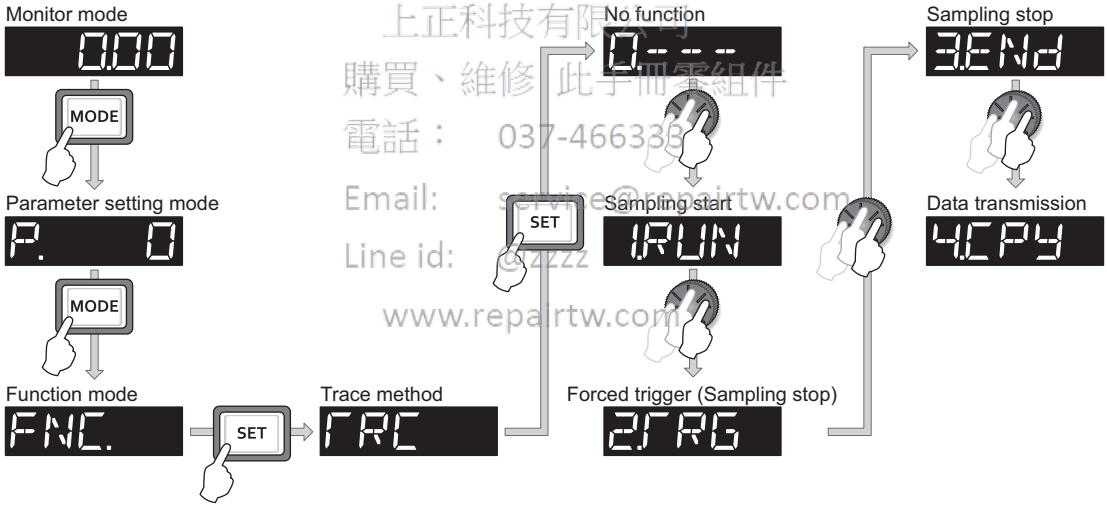

上正科技有限公司
購買、維修 此手冊零組件
電話： 037-466338
Email: service@repairtw.com
Line id: @zzzz
www.repairtw.com

(8) Selection of trace operation by input terminal (TRG signal, TRC signal)

- Trace operation can be selected by signal inputs.
- A forced trigger can be applied when the Trace trigger input (TRG) signal is ON.
- Sampling is started and stopped by the Trace sampling start/end (TRC) signal turning ON and OFF, respectively.
- To input the TRG signal, set "46" in any of **Pr.178 to Pr.189 (input terminal function selection)**, and to input the TRC signal, set "47" to assign the function to a terminal.

REMARKS

- Changing the terminal assignment using **Pr.178 to Pr.189 (input terminal function selection)** may affect the other functions. Set parameters after confirming the function of each terminal.

(9) Monitoring the trace status

- The trace status can be monitored on the operation panel by setting "38" in **Pr.52 Operation panel main monitor selection, Pr.774 to Pr.776 (Operation panel monitor selection), or Pr.992 Operation panel setting dial push monitor selection.**

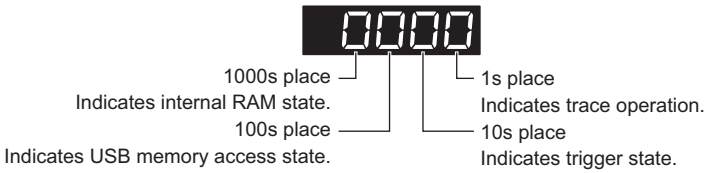

Monitor value	Trace status			
	1000s place	100s place	10s place	1s place
0	No trace data in internal RAM	USB memory not accessed	Trigger not detected	race stopped
1	Trace data in internal RAM	USB memory being accessed	Trigger detected	Trace operation
2	—	USB memory transfer error	—	—
3	—	USB buffer overrun	—	—

- When copying the traced data to a USB memory device, the operating status of the USB host can be checked with the inverter LED. For the overview of the USB communication function, refer to page 60.

LED status	Operating status
OFF	No USB connection.
ON	The communication is established between the inverter and the USB device.
Flickering rapidly	Traced data is being transmitted. (In the memory mode, transmission command is being issued. In the recorder mode, sampling is being performed.)
Flickering slowly	Error in the USB connection.

- During trace operation, the trace status signal (Y40) can be output.
  To use the Y40 signal, set "40 (positive logic) or 140 (negative logic)" in any of **Pr.190 to Pr.196 (output terminal function selection)** to assign the function to the output terminal.

上丞科技有限公司
購買、維修 此手冊零組件
電話： 037-469333
Email: service@repairtw.com
Line Id: @2222
www.repairtw.com

REMARKS

- Changing the terminal assignment using **Pr.190 to Pr.196 (output terminal function selection)** may affect the other functions. Set parameters after confirming the function of each terminal.

♦ Parameters referred to ♦

Pr.52 Operation panel main monitor selection ☞page 346
Pr.178 to Pr.189 (input terminal function selection) ☞page 416

5.15 (N) Operation via communication and its settings

Purpose	Parameter to set			Refer to page
To start operation via communication	Initial setting of operation via communication	P.N000, P.N001, P.N013, P.N014	Pr.549, Pr.342, Pr.502, Pr.779	541
To operate via communication from PU connector	Initial setting of computer link communication (PU connector)	P.N020 to P.N028	Pr.117 to Pr.124	544
To operate via communication from RS-485 terminals	Initial setting of computer link communication (RS-485 terminals)	P.N030 to P.N038	Pr.331 to Pr.337, Pr.341	
	Modbus-RTU communication specification	P.N002, P.N030, P.N031, P.N034, P.N080,	Pr.539, Pr.331, Pr.332, Pr.334, Pr.343,	560
To Communicate using USB (FR Configurator2)	USB communication	P.N040, P.N041	Pr.547, Pr.548	544
To connect a GOT	GOT automatic recognition	P.N020, P.N030	Pr.117, Pr.331	575

5.15.1 Wiring and configuration of PU connector

Using the PU connector enables communication operation from a personal computer, etc.
When the PU connector is connected with a personal, FA or other computer by a communication cable, a user program can run and monitor the inverter or read and write to parameters.

上正科技有限公司
購買 維修 此手冊零組件
電話： 037-466333
Email: service@repairtw.com
Line id: @zzzz
www.repairtw.com

(1) PU connector pin-outs

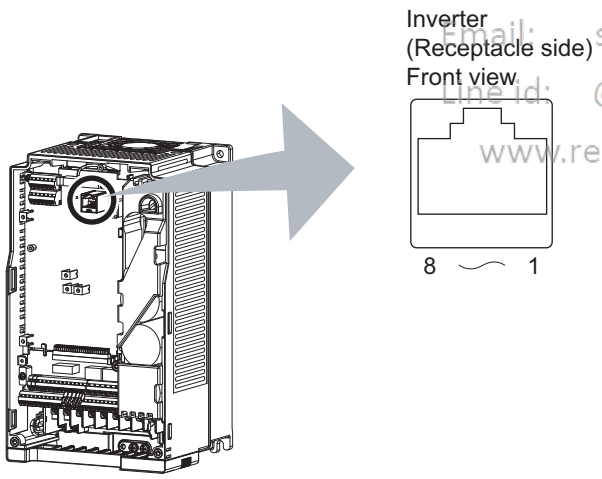

Pin number	Name	Description
1	SG	Earth (ground) (connected to terminal 5)
2	—	Operation panel power supply
3	RDA	Inverter receive+
4	SDB	Inverter send-
5	SDA	Inverter send+
6	RDB	Inverter receive-
7	SG	Earth (ground) (connected to terminal 5)
8	—	Operation panel power supply

REMARKS

- Pins No. 1 and 8 provide power to the operation panel or parameter unit. Do not use these pins during RS-485 communication.
- Do not connect the PU connector to the computer's LAN board, FAX modem socket or telephone modular connector. The product could be damaged due to differences in electrical specifications.

(2) Wiring and configuration of PU connector communication system

- System configuration

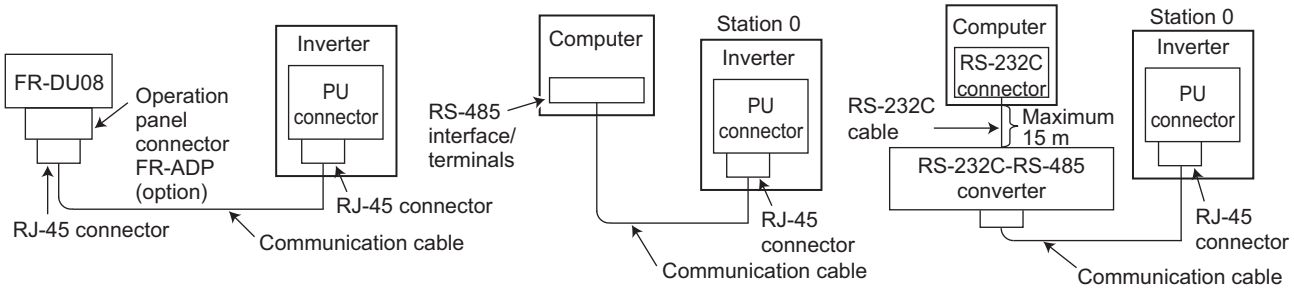

- Wiring of computer by RS-485

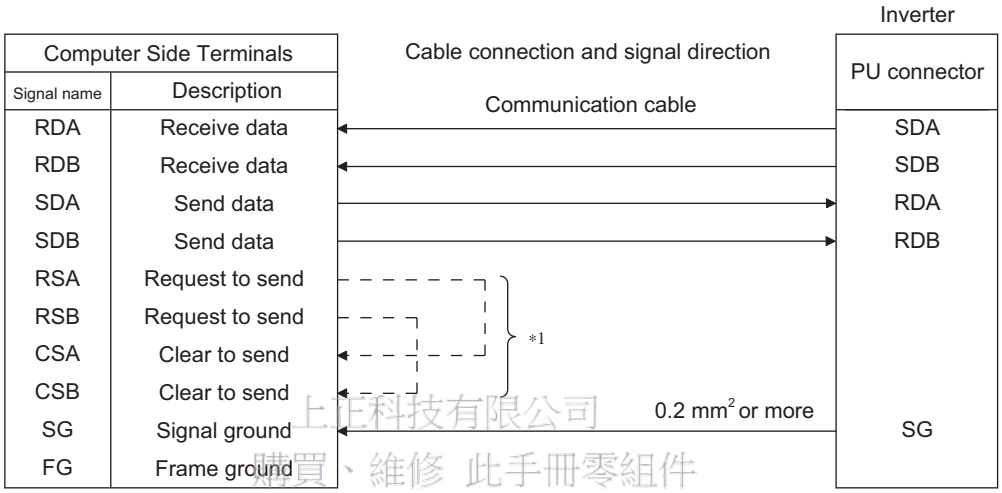

上正科技有限公司
購買、維修 此手冊零組件
電話： 037-466333
Email: service@repairtw.com
Line id: @zzzz
www.repairtw.com

*1 Make connection in accordance with the Instruction Manual of the computer to be used with. Fully check the terminal numbers of the computer since they vary with the model.

REMARKS

- When performing RS-485 communication with multiple inverters, use the RS-485 terminals. (Refer to page 538.)
- Computer-inverter connection cable
  Refer to the following for the connection cable (RS-232C ⇔ RS-485 converter) between the computer with an RS-232C interface and an inverter. Commercially available products (as of February 2012)

Model	Manufacturer
Interface embedded cable DAFXIH-CAB (D-SUB25P for personal computer side) DAFXIH-CABV (D-SUB9P for personal computer side) + Connector conversion cable DINV-485CAB (for inverter side) *2	Diatrend Corp.
Interface embedded cable dedicated for inverter DINV-CABV *2	

*2 The conversion cable cannot connect multiple inverters. (The computer and inverted are connected in a 1:1 pair.) This product is a RS-232C ⇔ RS-485 conversion cable that has a built-in converter. No additional cable or connector is required. For the product details, contact the manufacturer.

- Refer to the following table when fabricating the cable on the user side.
  Commercially available products (as of February 2012)

Name	Model	Manufacturer
Communication cable	SGLPEV-T (Cat5e/300m) 24AWG × 4P*3	Mitsubishi Cable Industries, Ltd.
RJ-45 connector	5-554720-3	Tyco Electronics

*3 Do not use pins No. 2 and 8 of the communication cable.

5.15.2 Wiring and configuration of RS-485 terminals

(1) RS-485 terminal layout

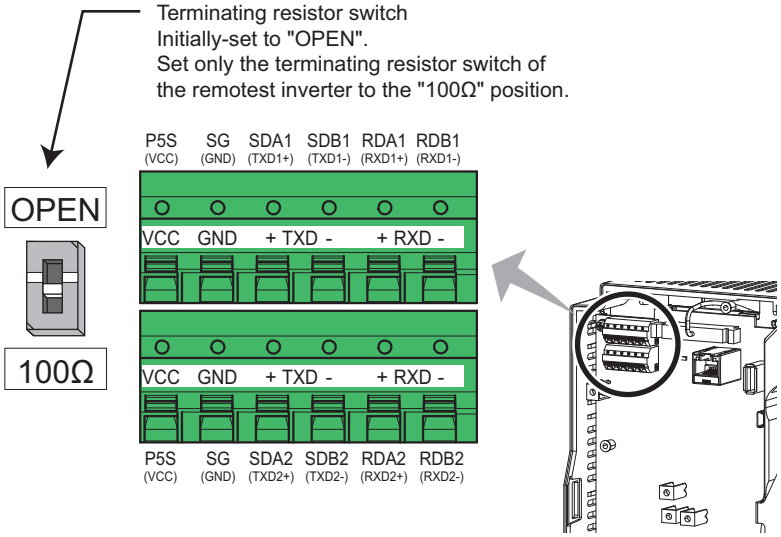

Name	Description
RDA1 (RXD1+)	Inverter receive +
RDB1 (RXD1-)	Inverter receive -
RDA2 (RXD2+)	Inverter receive + (for branch)
RDB2 (RXD2-)	Inverter receive - (for branch)
SDA1 (TXD1+)	Inverter send +
SDB1 (TXD1-)	Inverter send -
SDA2 (TXD2+)	Inverter send + (for branch)
SDB2 (TXD2-)	Inverter send - (for branch)
P5S (VCC)	5V Permissible load current 100 mA
SG (GND)	Earthing (grounding) (connected to terminal SD)

(2) Connection of RS-485 terminals and wires

- The size of RS-485 terminal block is the same as the control circuit terminal block.Refer to page 51 for the wiring method.

上正科技有限公司
購買、維修 此手冊零組件
電話： 037-466333
Email: service@repairtw.com
Line id: @zzzz
www.repairtw.com

REMARKS

- To avoid malfunction, keep the RS-485 terminal wires away from the control circuit board.
- When the FR-A820-01250(22K) or lower, or the FR-A840-00620(22K) or lower is used with a plug-in option, lead the wires through the hole on the side face of the front cover for wiring of the RS-485 terminals.

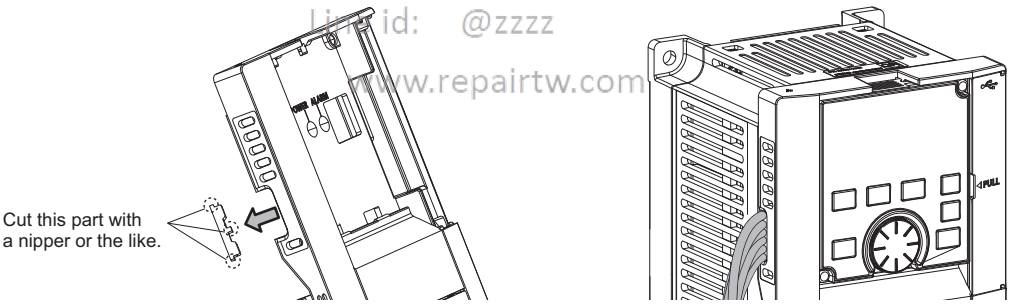

- When the FR-A820-01540(30K) of higher, or the FR-A840-00770(30K) or higher is used with a plug-in option, lead the wires on the left side of the plug-in option for wiring of the RS-485 terminals.

(3) System configuration of RS-485 terminals

- Computer and inverter connection (1:1)

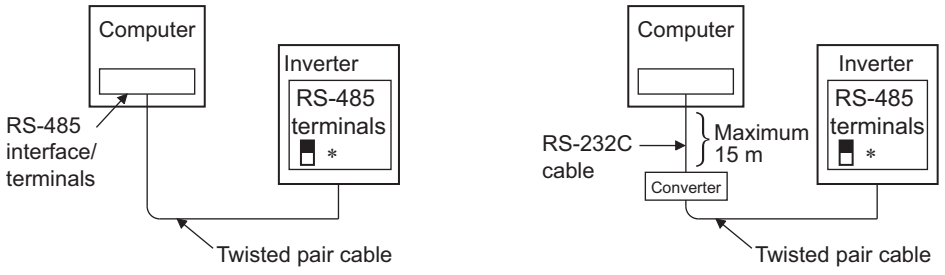

*Set the terminating resistor switch to the "100Ω" position.

- Combination of computer and multiple inverters (1:n)

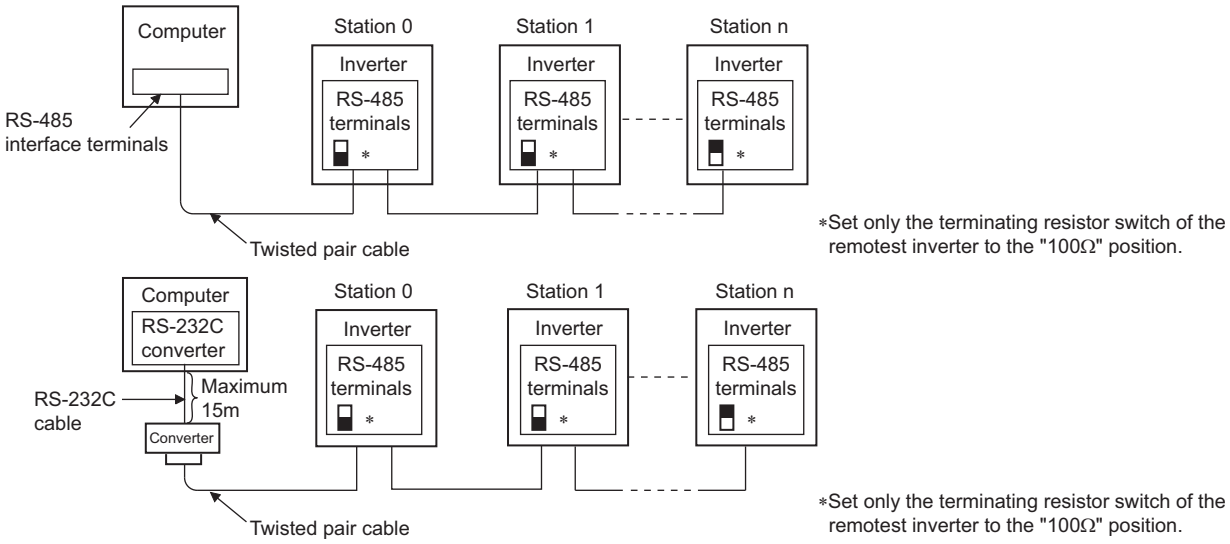

(4) How to wire RS-485 terminals

- 1 inverter and 1 computer with RS-485 terminals

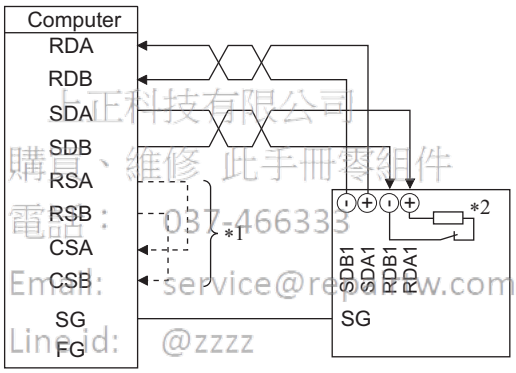

上正科技有限公司
購買、維修 此手冊零組件
電話： 037-466333
Email: service@repairtw.com
Line id: @zzzz
www.repairtw.com

- Multiple inverters and 1 computer with RS-485 terminals

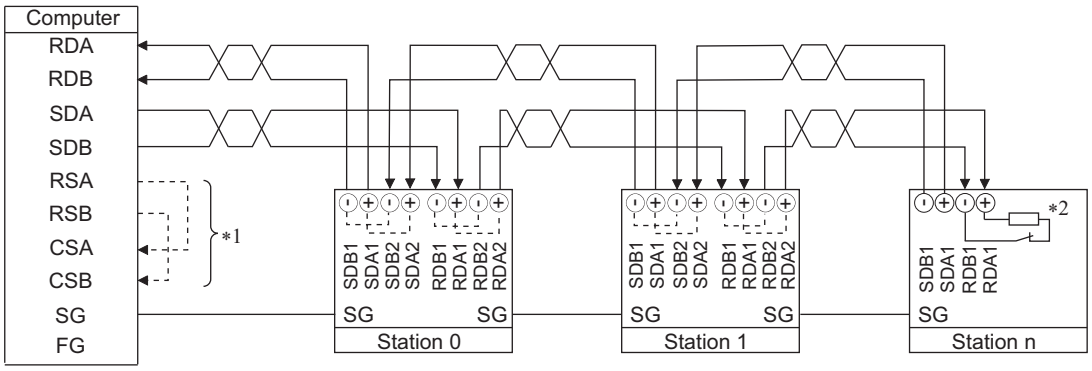

∗1 Make connection in accordance with the Instruction Manual of the computer to be used with.
Fully check the terminal numbers of the computer since they vary with the model.

∗2 For the inverter farthest from the computer, set the terminating resistor switch to ON (100 Ω side).

REMARKS

- For branching, connect the wires as shown below.

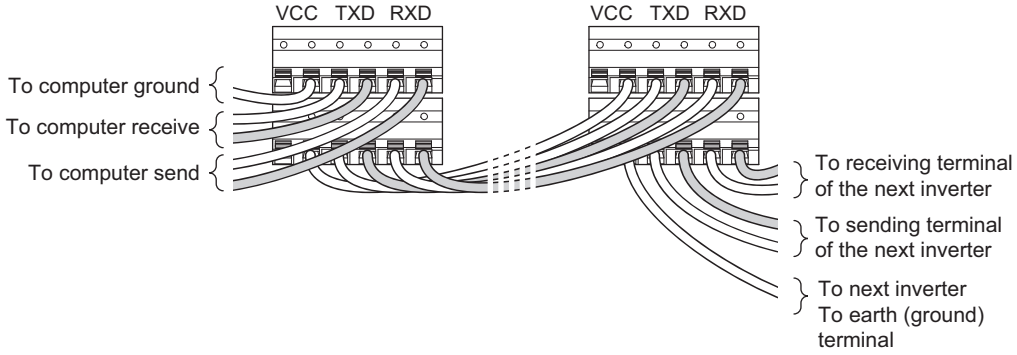

(5) Two-wire type connection

- If the computer is 2-wire type, a connection from the inverter can be changed to 2-wire type by passing wires across reception terminals and transmission terminals of the RS-485 terminals.

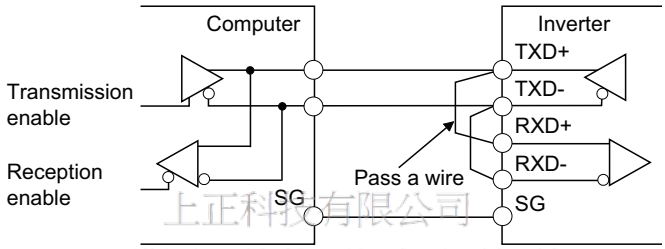

上正科技有限公司
購買、維修 此手冊零組件
電話： 037-466333
Email: service@repairtw.com
Line id: @zzzz
www.repairtw.com

REMARKS

- A program should be created so that transmission is disabled (receiving state) when the computer is not sending and reception is disabled (sending state) during sending to prevent the computer from receiving its own data.

5.15.3 Initial setting of operation via communication

Set the action when the inverter is performing operation via communication.
- Set the communication protocol. (Mitsubishi inverter protocol/Modbus-RTU protocol)
- Set the action at fault occurrence or at writing of parameters

Pr.	Name	Initial value	Setting range	Description	
549 N000	**Protocol selection**	0	0	Mitsubishi inverter protocol (computer link)	
			1	Modbus-RTU protocol	
342 N001	**Communication EEPROM write selection**	0	0	Parameter values written by communication are written to the EEPROM and RAM.	
			1	Parameter values written by communication are written to the RAM.	
502 N013	**Stop mode selection at communication error**	0		At fault occurrence	At fault removal
			0	Coasts to stop E.SER display*1 ALM signal output	Stays stopped (E.SER display*1)
			1	Deceleration stop E.SER display after stop*1 ALM signal output after stop	Stays stopped (E.SER display*1)
			2	Deceleration stop E.SER display after stop*1	Automatic restart function
			3	Operation continued at the set frequency of **Pr.779**	Normal operation
779 N014	**Operation frequency during communication error**	9999	0 to 590 Hz	Set the frequency to be run at a communication error occurrence.	
			9999	The motor runs at the frequency used before the communication error.	

*1 If in communication by the communication option, E.OP1 is displayed.

上正科技有限公司
購買 維修 此手冊委託
電話： 037-466333
Email: service@repairtw.com
Line id: @zzzz
www.repairtw.com

(1) Setting the communication protocol (Pr.549)

- Select the communication protocol.
- The Modbus-RTU protocol can be used by communication from the RS-485 terminals.

Pr.549 setting	Communication protocol
0(initial value)	Mitsubishi inverter protocol (computer link)
1	Modbus-RTU protocol

(2) Communication EEPROM write selection (Pr.342)

- When parameter write is performed via the inverter PU connector, RS-485 terminal, USB communication, or a communication option, the parameters storage device can be changed from EEPROM + RAM to RAM only. Use this function if parameter settings are changed frequently.
- When changing the parameter values frequently, set "1" in **Pr.342 Communication EEPROM write selection** to write them to the RAM only. The life of the EEPROM will be shorter if parameter write is performed frequently with the setting unchanged from "0 (initial value)" (EEPROM write).

REMARKS
- Turning OFF the inverter's power supply clears the modified parameter settings when **Pr.342** = "1 (write only to RAM)". Therefore, the parameter values at next power-ON are the values last stored in EEPROM.
- The parameter setting written in RAM cannot be checked on the operation panel. (The values displayed on the operation panel are the ones stored in EEPROM.)

(N) Operation via communication and its settings

(3) Operation selection at a communication error (Pr.502, Pr.779)

- For communication using RS-485 terminals or a communication option, operation at a communication error can be selected. The operation is active under the Network operation mode.
- Select the stop operation at the retry count excess (**Pr.335**, only with Mitsubishi inverter protocol) or at a signal loss detection **(Pr.336, Pr.539)**.
- When a communication error is detected while **Pr.502** = "3", the alarm (LF) signal is output to an output terminal of the inverter.To use the LF signal, set "98 (positive logic) or 198 (negative logic)" in any of **Pr.190 to Pr.196** (output terminal function selection) to assign the function to the output terminal.

Pr.502 setting	At fault occurrence				At fault removal			
	Operating status	Indication	Fault (ALM) signal	Alarm (LF) signal	Operating status	Indication	Fault (ALM) signal	Alarm (LF) signal
0 (initial value)	Coasts to stop	E.SER*1	ON	OFF	Stop status continues	E.SER*1	ON	OFF
1	Deceleration stop	E.SER after stop*1	ON after stop	OFF				OFF
2			OFF	OFF	Automatic restart function*3	Normal display	OFF	OFF
3	Operation continued at the set frequency of **Pr.779***2	Normal display	OFF	ON	Normal operation	Normal display	OFF	OFF

*1 If in communication by the communication option, E.OP1 is displayed.

*2 Under position control, the operation is continued to the target position.

*3 When the communication error is removed during deceleration, the motor re-accelerates.
Under position control, the motor does not re-accelerates even when the communication error is removed during deceleration.

上亞科技有限公司
購買 維修 此手冊零組件
電話： 037-466393
Email: service@repairtw.com
Line id: @zzzz
www.repairtw.com

Pr. 502 setting "0" (initial value)

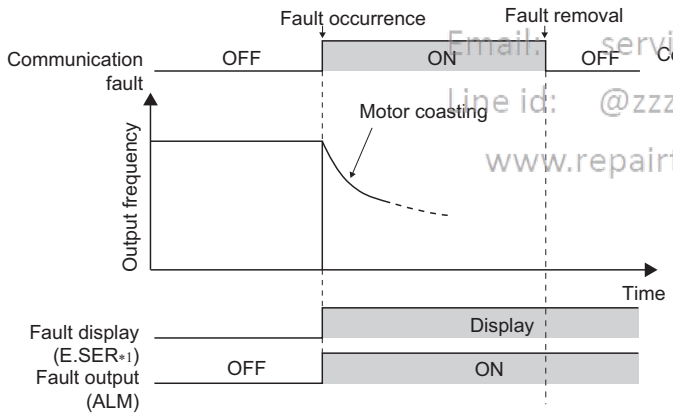

Pr. 502 setting "1"

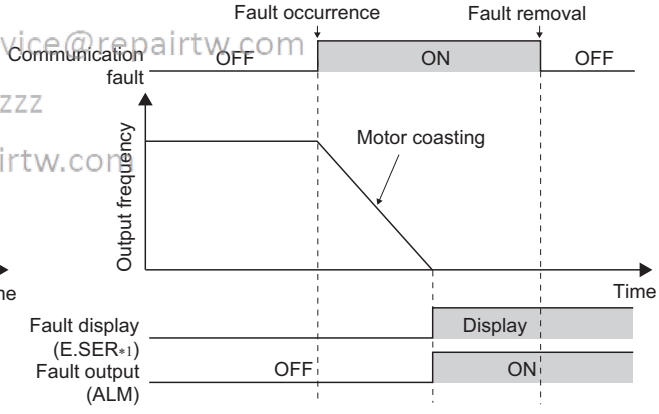

Pr. 502 setting "2"

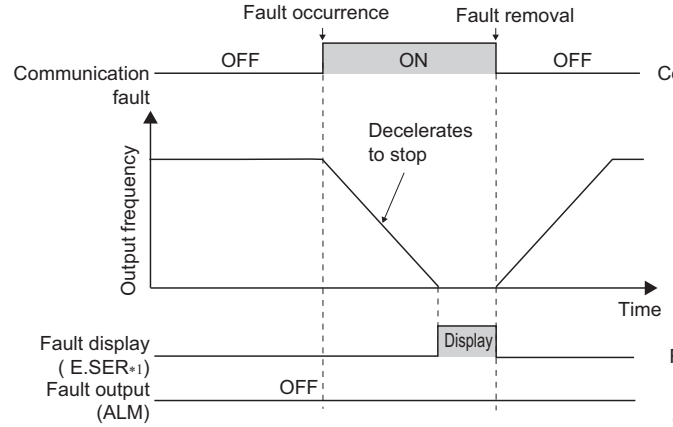

Pr. 502 setting "3"

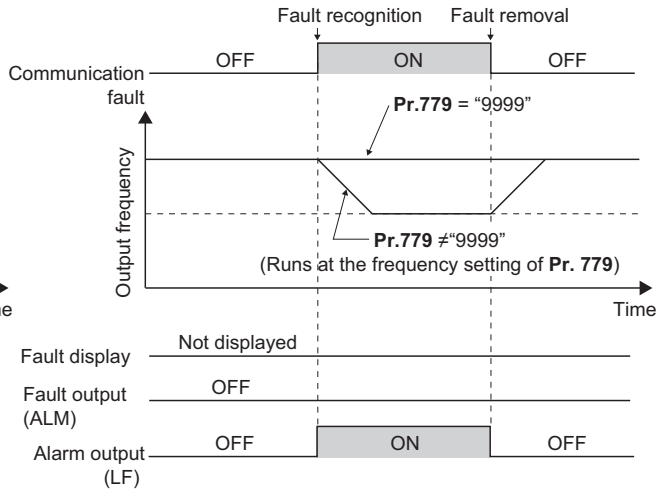

*1 If in communication by the communication option, E.OP1 is displayed.

REMARKS

- Fault output indicates the Fault signal (ALM) and an alarm bit output.
- When the fault output is set enabled, fault records are stored in the faults history. (A fault record is written to the faults history at a fault output.)
- When the fault output is not set enabled, fault record is overwritten to the faults history of the faults history temporarily but not stored.
- After the fault is removed, the fault indication goes back to normal indication on the monitor, and the faults history goes back to the previous status.
- If **Pr.502** is set to "1, 2, or 3", the normal deceleration time setting (settings like **Pr.8, Pr.44, and Pr.45**) is applied as the deceleration time. Normal acceleration time setting (settings like **Pr.7 and Pr.44**) is applied as the acceleration time for restart.
- When **Pr.502** = "2 or 3", the inverter operates with the start command and the speed command, which were used before the fault.
- If a communication line error occurs, then the error is removed during deceleration while **Pr.502** = "2", the motor re-accelerates from that point.
- The **Pr.502 and Pr.779** settings are valid when communication is performed via the RS-485 terminals or a communication option.
- These parameters are valid under the Network operation mode. When performing communication with RS-485 terminals, set **Pr.551 PU mode operation command source selection** to "2 (initial value)".
- **Pr.502** is valid for the device that has the command source under the Network operation mode. If a communication option is installed while **Pr.550** = "9999 (initial value)", a communication error in RS-485 terminals occurs and **Pr.502** becomes invalid.
- If the communication error setting is disabled with **Pr.502** = "3", **Pr.335** = "9999", and **Pr.539** = "9999", the inverter does not continue its operation with the frequency set by **Pr.779** at a communication error.
- If a communication error occurs while continuous operation at **Pr.779** is selected with **Pr.502** = "3", the inverter operates at the frequency set in **Pr.779** even though the speed command source is at the external terminals.
  Example) If a communication error occurs while **Pr.339** = "2" and the external terminal RL is ON, the operation is continued at the frequency set in **Pr.779**.
- During position control, a fault is output without deceleration even if **Pr.502** = "2".

♦ Parameters referred to ♦

Pr.7 Acceleration time, Pr.8 Deceleration time ☞ page 278
Pr.335 RS-485 communication retry count ☞ page 544
Pr.336 RS-485 communication check time interval ☞ page 544
Pr.539 Modbus-RTU communication check time interval ☞ page 560
Pr.550 NET mode operation command source selection ☞ page 308
Pr.551 PU mode operation command source selection ☞ page 308

卡正科技有限公司
購買・維修 此手冊零組件
電話： 037 466333
Email: service@repairtw.com
Line id: @zzzz
www.repairtw.com

5.15.4 Initial settings and specifications of RS-485 communication

Use the following parameters to perform required settings for the RS-485 communication between the inverter and a personal computer.

- There are two types of communication, communication using the inverter's PU connector and communication using the RS-485 terminals.
- Parameter setting, monitoring, etc. can be performed using Mitsubishi inverter protocol and Modbus-RTU communication protocol.
- To make communication between the personal computer and inverter, setting of the communication specifications must be made to the inverter in advance.
  Data communication cannot be made if the initial settings are not made of if there is any setting error.

[Parameters related to PU connector communication]

Pr.	Name	Initial value	Setting range	Description
117 N020	**PU communication station number**	0	0 to 31	Specify the inverter station number. Set the inverter station numbers when two or more inverters are connected to one personal computer.
118 N021	**PU communication speed**	192	48, 96, 192, 384, 576, 768, 1152	Set the communication speed. The setting value × 100 equals the communication speed. For example, if 192 is set, the communication speed is 19200 bps.
E022	**PU communication data length**	0	0	Data length 8 bits
			1	Data length 7 bits
E023	**PU communication stop bit length**	1	0	Stop bit length 1 bit
			1	Stop bit length 2 bits
119	**PU communication stop bit length / data length**	1	0	Stop bit length 1 bit (Data length 8 bits)
			1	Stop bit length 2 bits (Data length 8 bits)
			10	Stop bit length 1 bit (Data length 7 bits)
			11	Stop bit length 2 bits (Data length 7 bits)
120 N024	**PU communication parity check**	2	0	Without parity check
			1	With parity check at odd numbers
			2	With parity check at even numbers
121 N025	**Number of PU communication retries**	1	0 to 10	Set the permissible number of retries for unsuccessful data reception. If the number of consecutive errors exceeds the permissible value, the inverter will trip.
			9999	If a communication error occurs, the inverter will not trip.
122 N026	**PU communication check time interval**	9999	0	No PU connector communication
			0.1 to 999.8 s	Set the interval of the communication check (signal loss detection) time. If a no-communication state persists for longer than the permissible time, the inverter will trip.
			9999	No communication check (signal loss detection)
123 N027	**PU communication waiting time setting**	9999	0 to 150 ms	Set the waiting time between data transmission to the inverter and the response.
			9999	Set with communication data.
124 N028	**PU communication CR/LF selection**	1	0	Without CR/LF
			1	With CR
			2	With CR/LF

上正科技有限公司
購買、維修 此手冊委託中
電話：037-480[illegible]
Email: service@repair[illegible].com
Line id: @zzzz
www.repairtw.com

[Parameters related to communication with the RS-485 terminals]

Parameter number	Name	Initial value	Setting range	Description
331 N030	**RS-485 communication station number**	0	0 to 31 (0 to 247) *1*2	Set the inverter station number. (Same specifications as **Pr.117**)
332 N031	**RS-485 communication speed**	96	3, 6, 12, 24, 48, 96, 192, 384, 576, 768, 1152	Select the communication speed. (Same specifications as **Pr.118**)
N032	**RS-485 communication data length**	0	0, 1	Select the data length. (Same specifications as **P.E022**)*3
N033	**RS-485 communication stop bit length**	1	0, 1	Select the stop bit length. (Same specifications as **P.E023**)*4
333	**RS-485 communication stop bit length / data length**	1	0, 1, 10, 11	Select the stop bit length and data bit length. (Same specifications as **Pr.119**)*3*4
334 N034	**RS-485 communication parity check selection**	2	0, 1, 2	Select the parity check specifications. (Same specifications as **Pr.120**)
335 N035*5	**RS-485 communication retry count**	1	0 to 10, 9999	Set the permissible number of retries for unsuccessful data reception. (Same specifications as **Pr.121**)
336 N036*5	**RS-485 communication check time interval**	0 s	0	RS-485 communication is available, but the inverter trips in the NET operation mode.
			0.1 to 999.8 s	Set the interval of the communication check (signal loss detection) time. (Same specifications as **Pr.122**)
			9999	No communication check (signal loss detection)
337 N037*5	**RS-485 communication waiting time setting**	9999	0 to 150 ms, 9999	Set the waiting time between data transmission to the inverter and the response. (Same specifications as **Pr.123**)
341 N038*5	**RS-485 communication CR/LF selection**	1	0, 1, 2	Select the presence/absence of CR/LF. (Same specifications as **Pr.124**)

*1 When "1" (Modbus-RTU protocol) is set in **Pr.549**, the setting range within parentheses is applied.
*2 When a value outside the setting range is set, the inverter operates at the initial value.
*3 In the Modbus-RTU protocol, the data length is fixed at 8 bits.
*4 In the Modbus-RTU protocol, **Pr.334** setting is applied as the stop bit length. (Refer to page 560.)
*5 In the Modbus-RTU protocol, this is invalid.

上正科技有限公司
購買、維修 此手冊零組件
電話： 037-466333
Email: service@repairtw.com
Line id: @zzzz
www.repairtw.com

REMARKS

- The monitored items and parameter settings can be read during communication with the **Pr.336 RS-485 communication check time interval** = "0 (initial value)" setting, but such operation will become faulty once the operation mode is changed to the NET operation mode. When the NET operation mode is selected as the start-up operation mode, communication is performed once, then a Communication fault (inverter) (E.SER) occurs. To perform operation or parameter writing via communication, set "9999" or a large setting value in **Pr.336**. (The setting value is determined by the computer program.)(Refer to page 552.)
- Always reset the inverter after making the initial settings of the parameters. After changing the communication-related parameters, communication cannot be made until the inverter is reset.

5.15.5 Mitsubishi inverter protocol (computer link communication)

Parameter settings and monitoring are possible by using the Mitsubishi inverter protocol (computer link communication) via inverter PU connector and the RS-485 terminals.

(1) Communication specifications

• The communication specifications are given below.

Item		Description	Related Parameter
Communication protocol		Mitsubishi protocol (computer link)	Pr.551
Conforming standard		EIA-485 (RS-485)	—
Connectable units		1:N (maximum 32 units), setting is 0 to 31 stations	Pr.117 Pr.331
Communication Speed	PU connector	Selected among 4800/9600/19200/38400 bps	Pr.118
	RS-485 terminals	Selected among 300/600/1200/2400/4800/9600/19200/38400/38400/57600/76800/115200 bps	Pr.332
Control procedure		Asynchronous system	—
Communication method		Half-duplex system	—
Communication specifications	Character system	ASCII (7 bits or 8 bits can be selected.)	Pr.119 Pr.333
	Start bit	1 bit	—
	Stop bit length	1 bit or 2 bits can be selected.	Pr.119 Pr.333
	Parity check	Check (at even or odd numbers) or no check can be selected.	Pr.120 Pr.334
	Error check	Sum code check	—
	Terminator	CR/LF (presence/absence selectable)	Pr.124 Pr.341
Waiting time setting		Selectable between presence and absence	Pr.123 Pr.337

上正科技有限公司
購買、維修 此手冊零組件
電話： 037-466333
Email: service@repairtw.com
www.repairtw.com

(2) Communication procedure

• Data communication between the computer and inverter is made in the following procedure.

(a) Request data is sent from the computer to the inverter. (The inverter will not send data unless requested.)

(b) After waiting for the waiting time,

(c) The inverter sends reply data to the computer in response to the computer request.

(e) After waiting for the inverter data processing time,

(f) An answer from the computer in response to reply data (c) of the inverter is transmitted. (Even if (e) is not sent, subsequent communication is made properly.)

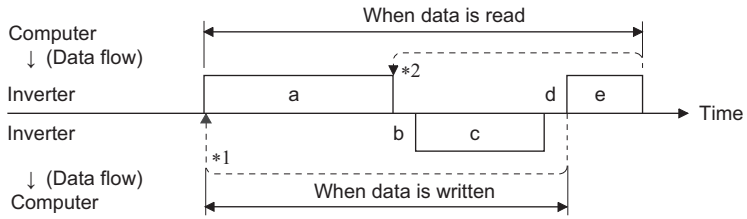

∗1 If a data error is detected and a retry must be made, perform retry operation with the user program. The inverter trips if the number of consecutive retries exceeds the parameter setting.

∗2 On receipt of a data error occurrence, the inverter returns reply data (c) to the computer again. The inverter trips if the number of consecutive data errors reaches or exceeds the parameter setting.

(3) Communication operation presence/absence and data format types

- Data communication between the computer and inverter is made in ASCII code (hexadecimal code).
- Communication operation presence/absence and data format types are as follows.

Symbol	Operation		Operation command	Operation frequency	Multi command	Parameter write	Inverter reset	Monitor	Parameter read
a	Communication request is sent to the inverter in accordance with the user program in the computer.		A, A1	A	A2	A	A	B	B
b	Inverter data processing time		With	With	With	With	Without	With	With
c	Reply data from the inverter (Data (a) is checked for an error)	No error *1 (Request accepted)	C	C	C1*3	C	C*2	E, E1, E2, E3	E
		With error (Request rejected)	D	D	D	D	D*2	D	D
d	Computer processing delay time		10 ms or more						
e	Answer from computer in response to reply data c (Data c is checked for error)	No error *1 (No inverter processing)	Without	Without	Without (C)	Without	Without	Without (C)	Without (C)
		With error (Inverter outputs c again.)	Without	Without	F	Without	Without	F	F

*1 In the communication request data from the computer to the inverter, 10 ms or more is also required after "no data error (ACK)". (Refer to page 550.)
*2 Reply from the inverter to the inverter reset request can be selected. (Refer to page 555.)
*3 At mode error, and data range error, C1 data contains an error code. (Refer to page 559) Except for those errors, the error is returned with data format D.

- Data writing format

上正科技有限公司
購買、維修 此手冊零組件
電話：037-466333
Email: service@repairtw.com
Line id: @zzzz
www.repairtw.com

a. Communication request data from the computer to the inverter

Format	Number of characters																		
	1	2	3	4	5	6	7	8	9	10	11	12	13	14	15	16	17	18	19
A	ENQ *1	Inverter station No. *2		Instruction code		*3	Data				Sum check		*4						
A1	ENQ *1	Inverter station No. *2		Instruction code		*3	Data		Sum check		*4								
A2	ENQ *1	Inverter station No. *2		Instruction code		*3	Send data type	Receive data type	Data1				Data2				Sum check		*4

c. Reply data from the inverter to the computer (No data error detected)

Format	Number of characters																		
	1	2	3	4	5	6	7	8	9	10	11	12	13	14	15	16	17	18	19
C	ACK *1	Inverter station No. *2		*4															
C1	STX *1	Inverter station No. *2		Send data type	Receive data type	Error code 1	Error code 2	Data1				Data2				ETX *1	Sum check		*4

c. Reply data from the inverter to the computer(Data error detected)

Format	Number of characters				
	1	2	3	4	5
D	NAK*1	Inverter station No. *2		Error code	*4

*1 Indicates a control code.
*2 Specifies the inverter station numbers in the range of H00 to H1F (stations 0 to 31) in hexadecimal.
*3 When **Pr.123 and Pr.337 (Waiting time setting)** ≠ 9999, create a communication request data without "waiting time" in the data format. (The number of characters decreases by 1.)
*4 CR, LF code: When data is transmitted from the computer to the inverter, codes CR (carriage return) and LF (line feed) are automatically set at the end of a data group on some computers. In this case, setting must be also made on the inverter according to the computer. Whether the CR and LF codes will be present or absent can be selected using **Pr.124 and Pr.341 (CR/LF selection)**.

(N) Operation via communication and its settings

- Data reading format

a. Communication request data from the computer to the inverter

Format	Number of characters								
	1	2	3	4	5	6	7	8	9
B	ENQ *1	Inverter station No. *2		Instruction code		*3	Sum check		*4

c. Reply data from the inverter to the computer (No data error detected)

Format	Number of characters												
	1	2	3	4	5	6	7	8	9	10	11	12	13
E	STX*1	Inverter station No. *2		Read data				ETX *1	Sum check		*4		
E1	STX*1	Inverter station No. *2		Read data		ETX*1	Sum check		*4				
E2	STX*1	Inverter station No. *2		Read data						ETX*1	Sum check		*4

Format	Number of characters							
	1	2	3	4 to 23	24	25	26	27
E3	STX*1	Inverter station No. *2		Read data (Inverter model information)	ETX*1	Sum check		*4

c. Reply data from the inverter to the computer (Data error detected)

Format	Number of characters				
	1	2	3	4	5
D	NAK*1	Inverter station No. *2		Error code	*4

e. Transmission data from the computer to the inverter when reading data

Format	Number of characters			
	1	2	3	4
C (No data error detected)	ACK*1	Inverter station No. *2		*4
F (Data error detected)	NAK*1	Inverter station No. *2		*4

上軍科技有限公司
購買 維修 此手冊零組件
電話： 037-466333
Email: service@repairtw.com
Line id: @zzzz
www.repairtw.com

*1 Indicates a control code.

*2 Specifies the inverter station numbers in the range of H00 to H1F (stations 0 to 31) in hexadecimal.

*3 When **Pr.123 and Pr.337 (Waiting time setting)** ≠ 9999, create a communication request data without "waiting time" in the data format. (The number of characters decreases by 1.)

*4 CR, LF code: When data is transmitted from the computer to the inverter, codes CR (carriage return) and LF (line feed) are automatically set at the end of a data group on some computers. In this case, setting must be also made on the inverter according to the computer. Whether the CR and LF codes will be present or absent can be selected using **Pr.124 and Pr.341 (CR/LF selection)**.

(4) Data definitions

- Control code

Signal name	ASCII Code	Description
STX	H02	Start Of Text (Start of data)
ETX	H03	End Of Text (End of data)
ENQ	H05	Enquiry (Communication request)
ACK	H06	Acknowledge (No data error detected)
LF	H0A	Line Feed
CR	H0D	Carriage Return
NAK	H15	Negative Acknowledge (Data error detected)

- Inverter station number
  Specify the station number of the inverter which communicates with the computer.
- Instruction code
  Specify the processing request, for example, operation or monitoring, given by the computer to the inverter. Hence, the inverter can be run and monitored in various ways by specifying the instruction code appropriately. (Refer to page 555.)
- Data
  Indicates the data such as frequency and parameters transferred to and from the inverter. The definitions and ranges of set data are determined in accordance with the instruction codes. (Refer to page 555.)
- Waiting time
  Specify the waiting time between the receipt of data at the inverter from the computer and the transmission of reply data. Set the waiting time in accordance with the response time of the computer in the range of 0 to 150 ms in 10 ms increments. (For example; 1=10 ms, 2= 20 ms)

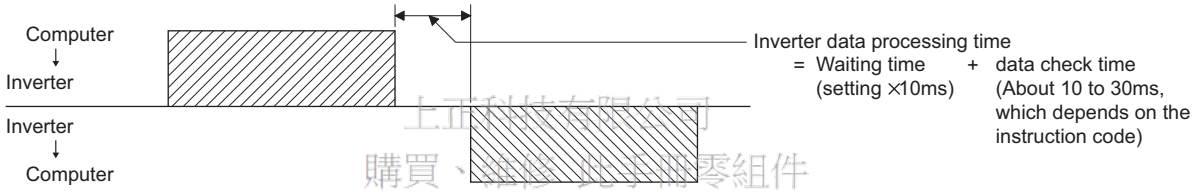

上市科技有限公司
購買、維修 此手冊零組件
電話： 037-466333
Email: service@repairtw.com
Line id: @zzzz
www.repairtw.com

REMARKS

- When **Pr.123 and Pr.337** (Waiting time setting) ≠ "9999", create a communication request data without "waiting time" in the data format. (The number of characters decreases by 1.)
- The data check time varies depending on the instruction code. (Refer to page 550.)

- Sum check code
  The sum check code is a 2-digit ASCII (hexadecimal) representing the lower 1 byte (8 bits) of the sum (binary) derived from the checked ASCII data.

(Example 1)

Computer→ Inverter

	ENQ	Station number		Instruction code		*Waiting time	Data				Sum check code		
		0	1	E	1	1	0	7	A	D	F	4	←Binary code
ASCII Code →	H05	H30	H31	H45	H31	H31	H30	H37	H41	H44	H46	H34	

H30+H31+H45+H31+H31+H30+H37+H41+H44
= H1F4
Sum

When the **Pr. 123 Waiting time setting** ≠ "9999", create the communication request data without "waiting time" in the data format. (The number of characters decreases by 1.)

(Example 2)

Inverter → Computer

	STX	Station number		Data read				ETX	Sum check code		
		0	1	1	7	7	0		3	0	←Binary code
ASCII Code →	H02	H30	H31	H31	H37	H37	H30	H03	H33	H30	

H30+H31+H31+H37+H37+H30
= H130
Sum

(N) Operation via communication and its settings

• Error code

If any error is found in the data received by the inverter, its error definition is sent back to the computer together with the NAK code.

Error Code	Error Item	Error Description	Inverter Operation
H0	Computer NAK error	The number of errors consecutively detected in communication request data from the computer is greater than the permissible number of retries.	Trips (E.PUE/E.SER) if error occurs continuously more than the permissible number of retries.
H1	Parity error	The parity check result does not match the specified parity.	
H2	Sum check error	The sum check code in the computer does not match that of the data received by the inverter.	
H3	Protocol error	The data received by the inverter has a grammatical mistake. Or, data receive is not completed within the predetermined time. CR or LF is not as set in the parameter.	
H4	Framing error	The stop bit length differs from the initial setting.	
H5	Overrun error	New data has been sent by the computer before the inverter completes receiving the preceding data.	
H6	——	——	——
H7	Character error	The character received is invalid (other than 0 to 9, A to F, control code).	Does not accept the received data, burt the inverter does not trip.
H8	——	——	——
H9	——	——	——
HA	Mode error	Parameter write was attempted in other than the computer link operation mode, when operation command source is not selected or during inverter operation.	Does not accept the received data, but the inverter does not trip.
HB	Instruction code error	The specified instruction code does not exist.	
HC	Data range error	Invalid data has been specified for parameter writing, running frequency setting, etc.	
HD	——	——	——
HE	——	——	——
HF	Normal (no error)	——	——

F.A.科技有限公司 維修 備品 零組件 電話: 037-466333 Email: service@repairtw.com Line id: @zzzz www.repairtw.com

(5) Response time

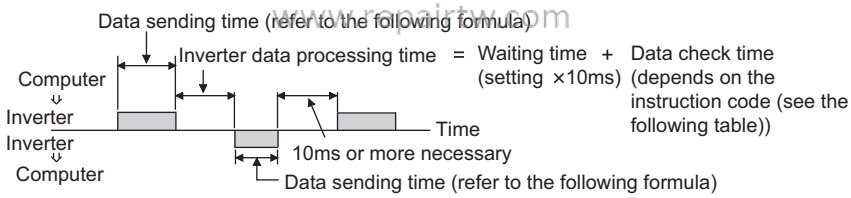

[Formula for data transmission time]

$$\frac{1}{\text{Communication speed (bps)}} \times \text{Number of data characters (Refer to page 547.)} \times \text{Communication specifications (Total number of bits)} = \text{data transmission time (s)}$$

(Refer to the following.)

•Communication specifications

Name		Number of bits
Stop bit length		1 bit 2 bits
Data Length		7 bits 8 bits
Parity check	With	1 bit
	Without	0

In addition to the above, 1 start bit is necessary.

Minimum number of total bits .....9 bits

Maximum number of total bits .....12 bits

•Data check time

Item	Check time
Various monitors, operation command, Frequency setting (RAM)	<12 ms
Parameter read/write, Frequency setting (EEPROM)	<30 ms
Parameter clear / all clear	<5 s
Reset command	No answer

(6) Retry count setting (Pr.121, Pr.335)

- Set the permissible number of retries at data receive error occurrence. (Refer to page 550 for data receive error for retry.)
- When the data receive errors occur consecutively and the number of retries exceeds the permissible number setting, a communication fault (PU connector communication: E.PUE, RS-485 terminal communication: E.SER) occurs and the inverter trips.
- When a data transmission error occurs while "9999" is set, the inverter does not trip but outputs the alarm (LF) signal . To use the LF signal, set "98 (positive logic) or 198 (negative logic)" in any of **Pr.190 to Pr.196 (output terminal function selection)** to assign the function to an output terminal.

Example: PU connector communication, **Pr. 121** = "1" (initial value)

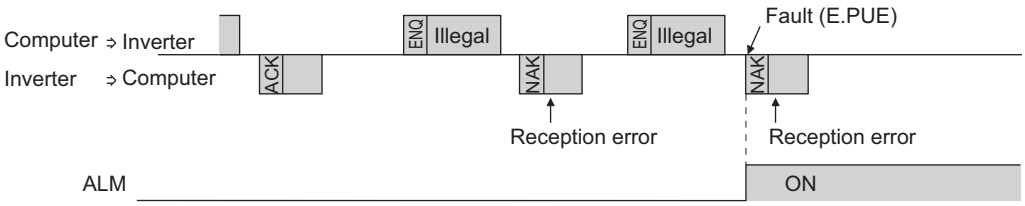

Example: PU connector communication, **Pr. 121** = "9999"

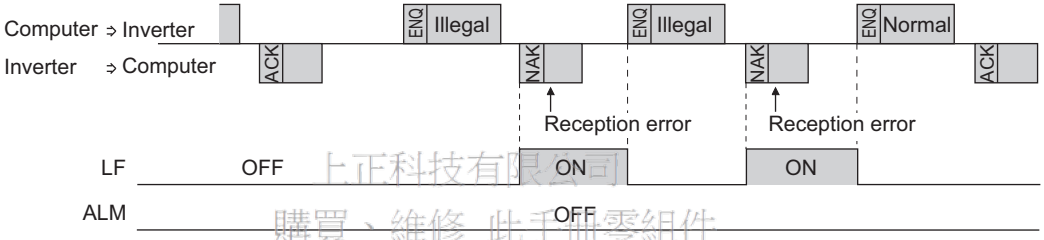

上正科技有限公司
購買、維修 此手冊零組件
電話： 037-466333
Email: service@repairtw.com
Line id: @zzzz
www.repairtw.com

REMARKS

- For the RS-485 terminal communication, the operation at a communication error occurrence depends on the **Pr.502 Stop mode selection at communication error** setting. (Refer to page 541)

(7) Signal loss detection (Pr.122, Pr.336 RS-485 communication check time interval)

- If a signal loss (communication stop) is detected between the inverter and computer as a result of a signal loss detection, a communication fault (PU connector communication: E.PUE, RS-485 terminal communication: E.SER) occurs and the inverter trips.
- When the setting is "9999", communication check (signal loss detection) is not made.
- When the setting is "0", communication from the PU connector is not possible. In the case of communication by RS-485 terminals, reading, etc. of monitors and parameters is possible, though a communication error (E.SER) occurs instantly when the Network operation mode is switched to.
- A signal loss detection is made when the setting is any of "0.1 s to 999.8 s". To make a signal loss detection, it is necessary to send data (for details on control codes, refer to page 549) from the computer within the communication check time interval. (The inverter makes a communication check (clearing of communication check counter) regardless of the station number setting of the data sent from the master).
- Communication check is started at the first communication in the operation mode having the operation source (PU operation mode for PU connector communication in the initial setting or Network operation mode for RS-485 terminal communication).

Example: PU connector communication, **Pr. 122** = "0.1 to 999.8s"

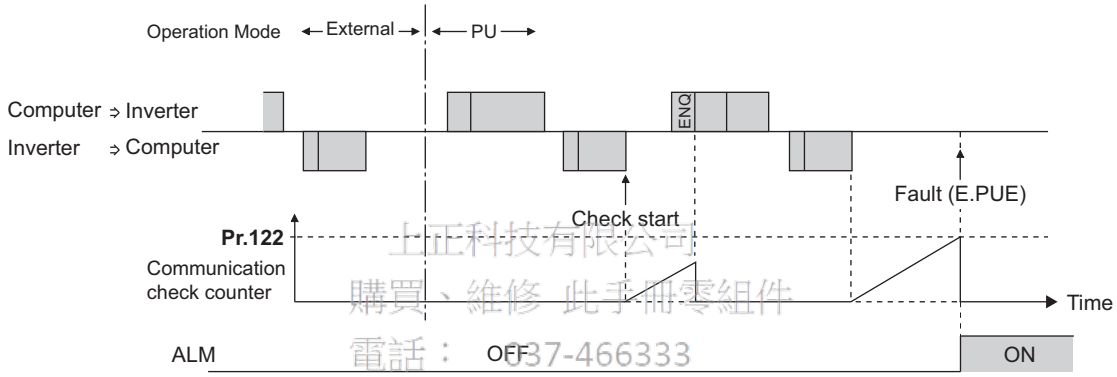

上正科技有限公司
購買、維修 此手冊零組件
電話： 037-466333
Email: service@repairtw.com
Line id: @zzzz
www.repairtw.com

(8) Instructions for the program

- When data from the computer has any error, the inverter does not accept that data. Hence, in the user program, always insert a retry program for data error.
- All data communication, for example, run command or monitoring, are started when the computer gives a communication request. The inverter does not return any data without the computer's request. Hence, design the program so that the computer gives a data read request for monitoring, etc. as required.
- Program example: To switch to the PU operation mode

Microsoft® Visual C++® (Ver.6.0) programming example

```
#include <stdio.h>
#include <windows.h>

void main(void){
	HANDLE		hCom;		// Communication handle
	DCB		hDcb;		// Structure for setting communication settings
	COMMTIMEOUTS		hTim;	// Structure for setting timeouts

	char		szTx[0x10];		// Send buffer
	char		szRx[0x10];		// Receive buffer
	char		szCommand[0x10];// Command
	int		nTx,nRx;		// For storing buffer size
	int		nSum;			// For calculating sum code
	BOOL		bRet;
	int		nRet;
	int		i;

	//**** Open COM1 port ****
	hCom = CreateFile("COM1", (GENERIC_READ | GENERIC_WRITE), 0, NULL, OPEN_EXISTING, FILE_ATTRIBUTE_NORMAL, NULL);
	if(hCom != NULL) {
		//****Set COM1 port communication ****
		GetCommState(hCom,&hDcb);				// Get current communication information
		hDcb.DCBlength = sizeof(DCB);			// Structure size setting
		hDcb.BaudRate  = 19200;				// Communication speed = 19200 bps
		hDcb.ByteSize  = 8;					// Data length = 8 bits
		hDcb.Parity    = 2;					// Parity check at even numbers
		hDcb.StopBits  = 2;					// Stop bit = 2 bits
		bRet = SetCommState(hCom,&hDcb);		// Setting of changed communication information
		if(bRet == TRUE) {
			//**** Set COM1 port timeout ****
			GetCommTimeouts(hCom,&hTim);			// Get current timeout values
			hTim.WriteTotalTimeoutConstant = 1000;	// Write timeout 1 second
			hTim.ReadTotalTimeoutConstant = 1000;	// Read timeout 1 second
			hTim.ReadTotalTimeoutConstantSetCommTimeouts(hCom,&hTim);// Setting of changed timeout values
			//**** Setting of command for switching the station number 1 inverter to the Network operation mode ****
			sprintf(szCommand,"01FB10000");		// Send data (NET operation write)
			nTx = strlen(szCommand);			// Send data size
			//**** Generate sum code ****
			nSum = 0;						// Initialize sum data
			for(i = 0;i < nTx;i++) {
				nSum += szCommand[i];			// Calculate sum code
				nSum &= (0xff);				// Mask data
			}

			//**** Generate send data ****
			memset(szTx,0,sizeof(szTx));		// Initialize send buffer
			memset(szRx,0,sizeof(szRx));		// Initialize receive buffer
			sprintf(szTx,"\5%s%02X",szCommand,nSum);// ENQ code + send data + sum code
			nTx = 1 + nTx + 2;				// ENQ code + number of send data + number of sum codes

			nRet = WriteFile(hCom,szTx,nTx,&nTx,NULL);
			//**** Send ****
			if(nRet != 0) {
				nRet = ReadFile(hCom,szRx,sizeof(szRx),&nRx,NULL);
			//**** Receive ****
				if(nRet != 0) {
					//**** Display receive data ****
					for(i = 0;i < nRx;i++) {
						printf("%02X ",(BYTE)szRx[i]);// Output received data to console
						// Display ASCII code in Hexadecimal' In case of 0', "30" is displayed.
					}
					printf("\n\r");
				}
			}
		}
		CloseHandle(hCom);					// Close communication port
	}
}
```

上正科技有限公司
購買、維修 此手冊零件
電話： 037-466333
service@repairtw.com
www.repairtw.com

(N) Operation via communication and its settings

General flowchart

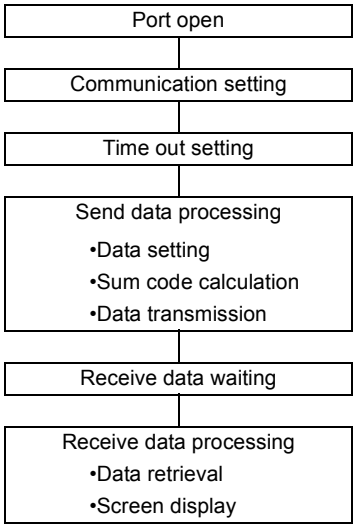

⚠ Caution

⚠ **Always set the communication check time interval before starting operation to prevent hazardous conditions.**

⚠ **Data communication is not started automatically but is made only once when the computer provides a communication request. If communication is disabled during operation due to signal cable breakage etc., the inverter cannot be stopped. When the communication check time interval has elapsed, the inverter will trip (E.PUE, E.SER).**
The inverter can be coasted to a stop by switching ON the RES signals or by switching the power OFF.

⚠ **If communication is broken due to signal cable breakage, computer fault etc., the inverter does not detect such a fault. This should be fully noted.**

上正科技有限公司
購買、維修 此手冊零組件
電話： 037-466333
Email: service@repairtw.com
Line id: @zzzz
www.repairtw.com

(9) Setting items and set data

- After completion of parameter settings, set the instruction codes and data, then start communication from the computer to allow various types of operation control and monitoring.

Item		Read/ Write	Instruction code	Data description	Number of data digits (Format)*1
Operation mode		Read	H7B	H0000: Network operation H0001: External operation H0002: PU operation, External/PU combined operation, PUJOG operation	4 digits (B.E/D)
		Write	HFB	H0000: Network operation H0001: External operation H0002: PU operation (RS-485 communication operation via PU connector)	4 digits (A,C/D)
Monitor	Output frequency /speed	Read	H6F	H0000 to HFFFF: Output frequency in 0.01Hz increments (The display can be changed to the rotations per minute using **Pr.37, Pr.144 and Pr.811**. (Refer to page 344))	4 digits (B.E/D)
	Output current	Read	H70	H0000 to HFFFF: Output current (hexadecimal) Increment 0.01 A (FR-A820-03160(55K) or lower, FR-A840-01800(55K) or lower) Increment 0.1 A (FR-A820-03800(75K) or higher, FR-A840-02160(75K) or higher)	4 digits (B.E/D)
	Output voltage	Read	H71	H0000 to HFFFF: Output voltage (hexadecimal) in 0.1 V increments	4 digits (B.E/D)
	Special monitor	Read	H72	H0000 to HFFFF: Monitor data selected in the instruction code HF3	4 digits (B.E/D)
	Special monitor selection No.	Read	H73	Monitor selection data (Refer to page 346 for details on selection No.)	2 digits (B.E1/D)
		Write	HF3		2 digits (A1,C/D)
	Fault record	Read	H74 to H77	H0000 to HFFFF: Two latest fault records 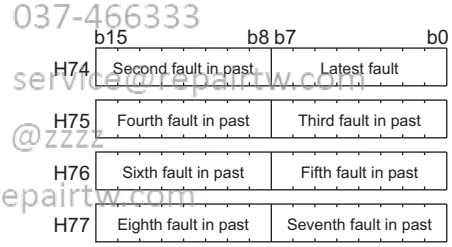 Fault record display example (instruction code H74) With the read data H30A0 (Last fault : THT) (Present fault : OPT) 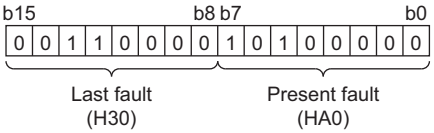 (Refer to page 621 for details on fault record read data.)	4 digits (B.E/D)
Operation command (extended)		Write	HF9	Control input commands such as forward rotation signal (STF) and reverse rotation signal (STR) can be set. (For the details, refer to page 558.)	4 digits (A,C/D)
Operation command		Write	HFA		2 digits (A1,C/D)
Inverter status monitor (extended)		Read	H79	The states of the output signals such as forward rotation, reverse rotation and inverter running (RUN) can be monitored. (For the details, refer to page 558.)	4 digits (B.E/D)
Inverter status monitor		Read	H7A		2 digits (B.E1/D)
Set frequency (RAM)		Read	H6D	Read the set frequency/speed from the RAM or EEPROM. H0000 to HFFFF: Set frequency in 0.01Hz increments (The display can be changed to the rotations per minute using **Pr.37, Pr.144 and Pr.811**. (Refer to page 344))	4 digits (B.E/D)
Set frequency (EEPROM)			H6E		

上正科技有限公司
購買、維修 此手冊零組件
電話： 037-466333
Email: service@repairtw.com
Line id: @zzzz
www.repairtw.com

(N) Operation via communication and its settings

Item	Read/ Write	Instruction code	Data description	Number of data digits (Format)*1
Set frequency (RAM)	Write	HED	Write the set frequency/speed into the RAM or EEPROM. H0000 to HE678 (0 to 590.00Hz): frequency in 0.01Hz increments (The display can be changed to the rotations per minute using **Pr.37, Pr.144 and Pr.811**. (Refer to page 344)) • To change the set frequency consecutively, write data to the inverter RAM. (Instruction code: HED)	4 digits (A,C/D)
Set frequency (RAM, EEPROM)		HEE		
Inverter reset	Write	HFD	H9696: Inverter reset • As the inverter is reset at the start of communication by the computer, the inverter cannot send reply data back to the computer.	4 digits (A,C/D)
			H9966: Inverter reset • When data is sent normally, ACK is returned to the computer, and then the inverter is reset.	4 digits (A,D)
Faults history batch clear	Write	HF4	H9696: Faults history batch clear	4 digits (A,C/D)
Parameter clear All clear	Write	HFC	All parameters return to initial values. Whether to clear communication parameters or not can be selected according to the data. • Parameter clear H9696: Communication parameters are cleared. H5A5A: Communication parameters are not cleared.*2 • All parameter clear H9966: Communication parameters are cleared. H55AA: Communication parameters are not cleared.*2 For the details of whether or not to clear parameters, refer to page 691. When a clear is performed with H9696 or H9966, communication related parameter settings also return to the initial values. When resuming the operation, set the parameters again. Performing a clear will clear the instruction code HEC, HF3, and HFF settings. Only H9966 and H55AA (all parameter clear) are valid during the password lock (refer to page 262).	4 digits (A,C/D)
Parameter	Read	H00 to H63	Refer to the instruction code (page 691) and write and/or read parameter values as required. When setting **Pr.100** and later, the link parameter extended setting must be set.	4 digits (B.E/D)
	Write	H80 to HE3		4 digits (A,C/D)
Link parameter Extended setting	Read	H7F	Parameter settings are switched according to the H00 to H0D settings. For details of the settings, refer to the instruction code (page 691).	2 digits (B.E1/D)
	Write	HFF		2 digits (A1,C/D)
Second parameter changing (instruction code HFF = 1, 9)	Read	H6C	When setting the calibration parameters *3 H00: Frequency *4 H01: Parameter-set analog value H02: Analog value input from terminal	2 digits (B.E1/D)
	Write	HEC		2 digits (A1,C/D)
Multi command	Write/ Read	HF0	Available for writing 2 commands, and monitoring 2 items for reading data (refer to page 559 for detail)	10 digits (A2,C1/D)
Inverter model monitor: Inverter model	Read	H7C	Reading inverter model in ASCII code. "H20" (blank code) is set for blank area Example of "FR-A840-1 (FM type)" H46, H52, H2D, H41, H38, H34, H30, H2D, H31, H20, H20 .... H20	20 digits (B,E3/D)
Inverter model monitor: Capacity	Read	H7D	Reading inverter ND rated capacity in ASCII code. Data is read in increments of 0.1kW, and rounds down to 0.01kW increments "H20" (blank code) is set for blank area Example 0.75K..... " 7" (H20, H20, H20, H20, H20, H37)	6 digits (B,E2/D)

*1 Refer to page 547 for data formats (A, A1, A2, B, C, C1, D, E, E1, E2, E3, F)

*2 Turning OFF the power supply while clearing parameters with H5A5A or H55AA returns the communication parameter settings to the initial settings.

*3 Refer to the calibration parameter list below for details on calibration parameters.

*4 The gain frequency can be also written using **Pr.125** (instruction code: H99) or **Pr.126** (instruction code: H9A).

原廠技術有限公司
購買、維修 此手冊零組件
電話： 037-466333
Email: service@repairtw.com
Line id: @zzzz
www.repairtw.com

REMARKS

- Set 65520 (HFFF0) as a parameter value "8888" and 65535 (HFFFF) as "9999".
- For the instruction codes HFF, HEC and HF3, their values are held once written but cleared to zero when an inverter reset or all clear is performed.
- When a 32-bit parameter setting or monitored value is read and the read value exceeds HFFFF, the reply data will be HFFFF.

Example) When reading the **C3 (Pr.902) and C6 (Pr.904)** settings from the inverter of station No. 0.

	Computer send data	Inverter send data	Description
a	ENQ 00 FF 0 01 7D	ACK 00	Set "H01" in the extended link parameter
b	ENQ 00 EC 0 01 79	ACK 00	Set "H01" in second parameter changing
c	ENQ 00 5E 0 0A	STX 00 0000 ETX 20	**C3 (Pr.902)** is read. 0% is read.
d	ENQ 00 60 0 F6	STX 00 0000 ETX 20	**C6 (Pr.904)** is read. 0% is read.

To read/write **C3 (Pr.902)** or **C6 (Pr.904)** after inverter reset or parameter clear, execute from (a) again.

(10) List of calibration parameters

Pr.	Name	Instruction code		
		Read	Write	Extended
C2 (902)	Terminal 2 frequency setting bias frequency	5E	DE	1
C3 (902)	Terminal 2 frequency setting bias	5E	DE	1
125 (903)	Terminal 2 frequency setting gain frequency	5F	DF	1
C4 (903)	Terminal 2 frequency setting gain	5F	DF	1
C5 (904)	Terminal 4 frequency setting bias frequency	60	E0	1
C6 (904)	Terminal 4 frequency setting bias	60	E0	1
126 (905)	Terminal 4 frequency setting gain frequency	61	E1	1
C7 (905)	Terminal 4 frequency setting gain	61	E1	1
C12 (917)	Terminal 1 bias frequency (speed)	11	91	9
C13 (917)	Terminal 1 bias (speed)	11	91	9
C14 (918)	Terminal 1 gain frequency (speed)	12	92	9
C15 (918)	Terminal 1 gain (speed)	12	92	9
C16 (919)	Terminal 1 bias command (torque/magnetic flux)	13	93	9
C17 (919)	Terminal 1 bias (torque/ magnetic flux)	13	93	9
C18 (920)	Terminal 1 gain command (torque/magnetic flux)	14	94	9
C19 (920)	Terminal 1 gain (torque/ magnetic flux)	14	94	9
C8 (930)	Current output bias signal	1E	9E	9
C9 (930)	Current output bias current	1E	9E	9
C10 (931)	Current output gain signal	1F	9F	9
C11 (931)	Current output gain current	1F	9F	9
C38 (932)	Terminal 4 bias command (torque/magnetic flux)	20	A0	9
C39 (932)	Terminal 4 bias (torque/ magnetic flux)	20	A0	9
C40 (933)	Terminal 4 gain command (torque/magnetic flux)	21	A1	9
C41 (933)	Terminal 4 gain (torque/ magnetic flux)	21	A1	9
C42 (934)	PID display bias coefficient	22	A2	9
C43 (934)	PID display bias analog value	22	A2	9
C44 (935)	PID display gain coefficient	23	A3	9
C45 (935)	PID display gain analog value	23	A3	9

上正科技有限公司
購買、維修此手冊請洽
電話：037-466333
Email: service@repairtw.com
Line Id: @zzzz
www.repairtw.com

(N) Operation via communication and its settings

(11) Operation command

Item	Instruction code	Bit length	Description*1*3	Example
Operation command	HFA	8 bits	b0: AU (Terminal 4 input selection) b1: Forward rotation command b2: Reverse rotation command b3: RL (Low-speed operation command) b4: RM (Middle-speed operation command) b5: RH (High-speed operation command) b6: RT (Second function selection) b7: MRS (Output stop)	[Example 1] H02 Forward rotation b7 b0 0 0 0 0 0 0 1 0 [Example 2] H00 Stop b7 b0 0 0 0 0 0 0 0 0
Operation command (extended)	HF9	16 bits	b0: AU (Terminal 4 input selection) b1: Forward rotation command b2: Reverse rotation command b3: RL (Low-speed operation command) b4: RM (Middle-speed operation command) b5: RH (High-speed operation command) b6: RT (Second function selection) b7: MRS (Output stop) b8: JOG (Jog operation selection) *2 b9: CS (Selection of automatic restart after instantaneous power failure, flying start) *2 b10: STOP (Start self-holding selection) *2 b11: RES (Inverter reset) *2 b12 to b15: -	[Example 1] H0002 Forward rotation b15 b0 0 0 0 0 0 0 0 0 0 0 0 0 0 1 0 [Example 2] H0800 low speed operation (When **Pr. 189 RES terminal function selection** is set to "0") b15 b0 0 0 0 0 1 0 0 0 0 0 0 0 0 0 0

*1 The signal within parentheses ( ) is the initial status. The description changes depending on the setting of **Pr.180 to Pr.184, Pr.187 (Input terminal function selection)** (page 416).

*2 JOG operation/automatic restart after instantaneous power failure/start self-holding selection/reset cannot be controlled over a network, so in the initial status bit8 to bit11 are invalid. To use bit8 to bit11, change the signal by **Pr.185, Pr.186, Pr.188,** or **Pr.189 (Input terminal function selection)** (page 416) (A reset can be executed by the instruction code HFD.)

*3 In RS-485 communication from the PU connector, only the forward rotation command and reverse rotation command can be used.

上亞科技有限公司
購買・維修 此手冊零組件
電話： 037-466333
Email: service@repairtw.com
Line id: @zzzz
www.repairtw.com

(12) Inverter status monitor

Item	Instruction code	Bit Length	Description*1	Example
Inverter status monitor	H7A	8 bits	b0: RUN (Inverter running) b1: During forward rotation b2: During reverse rotation b3: SU (Up to frequency) b4: OL (Overload warning) b5: IPF (Instantaneous power failure/ undervoltage) b6: FU (Output frequency detection) b7: ABC1 (Fault)	[Example 1] H02 ··· During forward rotation b7 b0 0 0 0 0 0 0 1 0 [Example 2] H80 ··· Stop at fault occurrence b7 b0 1 0 0 0 0 0 0 0
Inverter status monitor (extended)	H79	16 bits	b0: RUN (Inverter running) b1: During forward rotation b2: During reverse rotation b3: SU (Up to frequency) b4: OL (Overload warning) b5: IPF (iInstantaneous power failure/ undervoltage) b6: FU (Output frequency detection) b7: ABC1 (Fault) b8: ABC2 (—) b9: Safety monitor output b10 to b14: - b15: Fault occurrence	[Example 1] H0002 ···During forward rotation b15 b0 0 0 0 0 0 0 0 0 0 0 0 0 0 0 1 0 [Example 2] H8080 ···Stop at fault occurrence b15 b0 1 0 0 0 0 0 0 0 1 0 0 0 0 0 0 0

*1 The signal within parentheses ( ) is the initial status. The description changes depending on the setting of **Pr.190 to Pr.196 (output terminal function selection)**.

(13) Multi command (HF0)

• Sending data format from computer to inverter

Format	Number of characters																		
	1	2	3	4	5	6	7	8	9	10	11	12	13	14	15	16	17	18	19
A2	ENQ	Inverter station No.		Instruction Code (HF0)		Waiting time	Send data type *1	Receive data type *2	Data1 *3				Data2 *3				Sum check		CR/LF

• Reply data format from inverter to computer (No data error detected)

Format	Number of characters																		
	1	2	3	4	5	6	7	8	9	10	11	12	13	14	15	16	17	18	19
C1	STX	Inverter station No.		Send data type *1	Receive data type *2	Error code 1 *5	Error code 2 *5	Data1 *4				Data2 *4				ETX	Sum check		CR/LF

*1 Specify the data type of sending data (from computer to inverter).
*2 Specify the data type of reply data (from inverter to computer).
*3 Combination of data 1 and data 2 for sending

Data type	Data 1	Data 2	Remarks
0	Operation command (extended)	Set frequency (RAM)	Run command (extended) is same as instruction code HF9 (Refer to page 558)
1	Operation command (extended)	Set frequency (RAM, EEPROM)	

*4 Combination of data 1 and data 2 for reply

Data type	Data 1	Data 2	Remarks
0	Inverter status monitor (extended)	Output frequency (speed)	Inverter status monitor (extended) is same as instruction code H79 (Refer to page 558)
1	Inverter status monitor (extended)	Special monitor	Replys the monitor item specified in instruction code HF3 for special monitor.(Refer to page 346)

*5 Error code for sending data 1 is set in error code 1, and error code for sending data 2 is set in error code 2.
Mode error (HA), instruction code error (HB), data range error (HC) or no error (HF) is replied. (Refer to page 621 for the details of the error codes.)

上正科技有限公司
購買 維修 此手冊零組件
電話： 037-466333
Email: service@repairtw.com
Line id: @zzzz
www.repairtw.com

5.15.6 Modbus-RTU communication specification

Operation by Modbus-RTU communication or parameter setting is possible by using the Modbus-RTU communication protocol from the RS-485 terminals of the inverter.

Pr.	Name	Initial value	Setting range	Description
331 N030	**RS-485 communication station number**	0	0	Broadcast communication
			1 to 247	Inverter station number specification Set the inverter station numbers when two or more inverters are connected to one personal computer.
332 N031	**RS-485 communication speed**	96	3, 6, 12, 24, 48, 96, 192, 384, 576, 768, 1152	Set the communication speed. The setting value × 100 equals the communication speed. For example, if 96 is set, the communication speed is 9600 bps.
334 N034	**RS-485 communication parity check selection**	2	0	Without parity check Stop bit length 2 bits
			1	With parity check at odd numbers Stop bit length 1 bit
			2	With parity check at even numbers Stop bit length 1 bit
343 N080	**Communication error count**	0	—	Displays the communication error count during Modbus-RTU communication. Read-only.
539 N002	**Modbus-RTU communication check time interval**	9999	0	Modbus-RTU communication, but the inverter trips in the NET operation mode.
			0.1 to 999.8 s	Set the interval of the communication check (signal loss detection) time. (same specifications as **Pr.122**)
			9999	No communication check (signal loss detection)
549 N000	**Protocol selection**	0	0	Mitsubishi inverter protocol (computer link)
			1	Modbus-RTU protocol

上正科技有限公司
購買、維修 此手冊零組件
電話： 037-466333
Email: service@repairtw.com
Line id: @zzz
www.repairtw.com

REMARKS

- To use the Modbus-RTU protocol, set "1" to **Pr.549 Protocol selection**.
- If Modbus-RTU communication is performed from the master to the address 0 (station number 0), the data is broadcasted, and the inverter does not send any reply to the master. To obtain replies from the inverter, set **Pr.331 RS-485 communication station number** ≠ "0 (initial value)". Some functions are disabled in broadcast communication. (Refer to page 562.)
- If a communication option is mounted with **Pr.550 NET mode operation command source selection** = "9999 (initial value)", commands (operation commands) transmitted via RS-485 terminals become invalid. (Refer to page 308.)

(1) Communication specifications

- The communication specifications are given below.

Item		Description	Related parameter
Communication protocol		Modbus-RTU protocol	**Pr.549**
Conforming standard		EIA-485 (RS-485)	—
Connectable units		1:N (maximum 32 units), setting is 0 to 247 stations	**Pr.331**
Communication Speed		Selected among 300/600/1200/2400/4800/9600/19200/38400/57600/76800/115200 bps	**Pr.332**
Control procedure		Asynchronous system	—
Communication method		Half-duplex system	—
Communication specifications	**Character system**	Binary (fixed at 8 bits)	—
	Start bit	1 bit	—
	Stop bit length	Select from the following three types: No parity check, stop bit length 2 bits Odd parity check , stop bit length 1 bit Even parity check, stop bit length 1 bit	**Pr.334**
	Parity check		
	Error check	CRC code check	—
	Terminator	Not used	—
Waiting time setting		Not used	—

(2) Outline

- The Modbus communication protocol was developed by Modicon for programmable controllers.
- The Modbus protocol uses exclusive message frames to perform serial communication between a master and slaves. These exclusive message frames are provided with a feature called "functions" that allows data to be read or written. These functions can be used to read or write parameters from the inverter, write input commands to the inverter or check the inverter's operating status, for example. This product classifies the data of each inverter into holding register area (register address 40001 to 49999). The master can communicate with inverters (for instance,. slaves) by accessing pre-assigned holding register addresses.

REMARKS

- There are two serial transmission modes, the ASCII (American Standard Code for Information Interchange) mode and the RTU (Remote Terminal Unit) mode. However, this product supports only the RTU mode, which transfers 1 byte data (8 bits) as it is. Also, only communication protocol is defined by the Modbus protocol. Physical layers are not stipulated.

(3) Message format

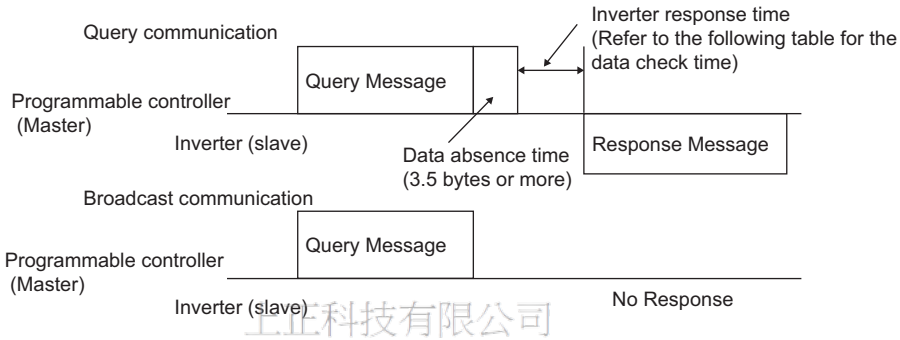

上正科技有限公司
購買、維修 此手冊零組件
電話： 037-466333
Email: service@repairtw.com
Line id: @zzzz
www.repairtw.com

- Data check time

Item	Check time
Various monitors, operation command, Frequency setting (RAM)	<12 ms
Parameter read/write, frequency setting (EEPROM)	<30 ms
Parameter clear / all clear	<5 s
Reset command	No answer

- Query

  A message is sent to the slave (for instance, the inverter) having the address specified by the master.

- Normal Response

  After the query from the master is received, the slave executes the request function, and returns the corresponding normal response to the master.

- Error Response

  When an invalid function code, address or data is received by the slave, the error response is returned to the master.
  This response is appended with an error code that indicates the reason why the request from the master could not be executed.
  This response cannot be returned for errors, detected by the hardware, frame error and CRC check error.

- Broadcast

  The master can broadcast messages to all slaves by specifying address 0. All slaves that receive a message from the master execute the requested function. With this type of communication, slaves do not return a response to the master.

REMARKS

- During broadcast communication, functions are executed regarded of the set inverter station number **(Pr.331)**.

(N) Operation via communication and its settings

(4) Message frame (protocol)

- Communication method

  Basically, the master sends a Query message (question), and slaves return the Response message (response). At normal communication, the Device Address and Function Code are copied as they are, and at erroneous communication (illegal function code or data code), bit7 (= 80 h) of the Function Code is turned ON, and the error code is set at Data Bytes.

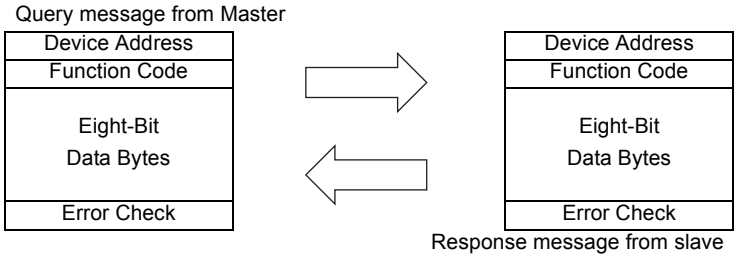

  Message frames comprise of the four message fields shown in the figures above.

  A slave recognizes message data as a message by the message data being prefixed and appended with a no data time of 3.5 characters (T1: start/end).

- Details of protocol

  The following table explains the four message fields.

Start	ADDRESS	FUNCTION	DATA	CRC CHECK		End
T1	8 bits	8 bits	n × 8 bits	L 8 bits	H 8 bits	T1

上正科技有限公司
購買 維修 此手冊零組件
電話： 037-466333
Email: service@repairtw.com
Line id: @zzzz
www.repairtw.com

Message field	Description
ADDRESS field	0 to 247 can be set in single byte lengths (8 bits). Set "0" when sending broadcast messages (instructions to all addresses), and "1 to 247" to send messages to individual slaves. The address set by the master is also returned when the response from the slave is. The value set to **Pr.331 RS-485 communication station number** is the slave address.
FUNCTION field	1 to 255 can be set in single byte lengths (8 bits) for the function code. The master sets the function to be sent to the slave as the request, and the slave performs the requested operation. "(5) Function code list" summarizes the supported function codes. An error response is generated when a function code other than "Function code list" is set. At a response from the slave, the function code set by the master is returned in the case of a normal response. At an error response, H80 + the function code is returned.
DATA field	The format changes according to the function code. (Refer to **page 563**.) The data, for example, includes the byte count, number of bytes and accessing content of holding registers.
CRC CHECK field	Errors in the received message frame are detected. Errors are detected in the CRC check, and the message is appended with data 2 bytes long. When the message is appended with the CRC, the lower bytes are appended first, followed by the upper bytes. The CRC value is calculated by the sender that appends the message with the CRC. The receiver recalculates the CRC while the message is being received, and compares the calculation result against the actual value that was received in the error check field. If the two values do not match, the result is treated as an error.

(5) Function code list

Function name	Read/ Write	Code	Outline	Broadcast communication	Message format reference page
Read Holding Register	Read	H03	The data of the holding registers is read. The various data of the inverter can be read from Modbus registers. System environmental variable (Refer to page 569.) Real time monitor (Refer to page 347.) Faults history (Refer to page 571.) Model information monitor (Refer to page 571.) Inverter parameters (Refer to page 570.)	Not available	page 564.
Preset Single Register	Write	H06	Data is written to holding registers. Data can be written to Modbus registers to output instructions to the inverter or set parameters. System environmental variable (Refer to page 569.) Inverter parameters (Refer to page 570.)	Available	page 565.
Diagnostics	Read	H08	Functions are diagnosed. (communication check only) A communication check can be made since the query message is sent and the query message is returned as it is as the return message (subfunction code H00 function). Subfunction code H00 (Return Query Data)	Not available	page 565.
Preset Multiple Registers	Read	H10	Data is written to consecutive multiple holding registers. Data can be written to consecutive multiple Modbus registers to output instructions to the inverter or set parameters. System environmental variable (Refer to page 569.) Inverter parameters (Refer to page 570.)	Available	page 566.
Read holding register access log	Read	H46	The number of registers that were successfully accessed by the previous communication is read. Queries by function codes H03 and H10 are supported. The number and start address of holding registers successfully accessed by the previous communication are returned. "0" is returned for both the number and start address for queries other than function code H03 and H10.	Not available	page 567.

上正科技有限公司
購買 維修 此手冊零組件
電話： 037-466333
Email: service@repairtw.com
Line id: @zzzz
www.repairtw.com

(6) Read Holding Register (reading of data of holding registers) (H03 or 03)

- Query message

a.Slave Address	b. Function	c. Starting Address		d. No. of Points		CRC Check	
(8 bits)	H03 (8 bits)	H (8 bits)	L (8 bits)	H (8 bits)	L (8 bits)	L (8 bits)	H (8 bits)

- Normal response (Response message)

a.Slave Address	b. Function	e. Byte Count	f. Data			CRC Check	
(8 bits)	H03 (8 bits)	(8 bits)	H (8 bits)	L (8 bits)	... (n × 16 bits)	L (8 bits)	H (8 bits)

- Query message setting

Message		Description
a	Slave Address	Set the address to send messages to. Broadcast communication is not possible. (Invalid when "0" is set.)
b	Function	Set H03.
c	Starting Address	Set the address from which to start reading of data from the holding register. Start address = start register address (decimal) - 40001 For example, when start register address 0001 is set, the data of holding register address 40002 is read.
d	No. of Points	Set the number of holding registers to read. Data can be read from up to 125 registers.

- Content of normal response

Message		Description
e	Byte Count	The setting range is H02 to HFA (2 to 250). Twice the number of reads specified by (d) is set.
f	Data	The amount of data specified by (d) is set. Read data is output Hi bytes first followed by Lo bytes, and is arranged as follows: data of start address, data of start address+1, data of start address+2, and so forth.

上正科技有限公司
購買、維修 此手冊零組件
電話： 037-466333
Email: service@repairtw.com
Line id: @zzz
www.repairtw.com

Example) Read the register values of 41004 **(Pr.4)** to 41006 **(Pr.6)** from slave address 17 (H11).

Query message

Slave Address	Function	Starting Address		No. of Points		CRC Check	
H11 (8 bits)	H03 (8 bits)	H03 (8 bits)	HEB (8 bits)	H00 (8 bits)	H03 (8 bits)	H77 (8 bits)	H2B (8 bits)

Response message

Slave Address	Function	Byte Count	Data						CRC Check	
H11 (8 bits)	H03 (8 bits)	H06 (8 bits)	H17 (8 bits)	H70 (8 bits)	H0B (8 bits)	HB8 (8 bits)	H03 (8 bits)	HE8 (8 bits)	H2C (8 bits)	HE6 (8 bits)

Read value

Register 41004 **(Pr.4)**: H1770 (60.00 Hz)

Register 41005 **(Pr.5)**: H0BB8 (30.00 Hz)

Register 41006 **(Pr.6)**: H03E8 (10.00 Hz)

(7) Preset Single Register (writing of data to holding registers) (H06 or 06)

- The content of the "system environmental variables" and "inverter parameters" assigned to the holding register area (refer to the register list (page 569)) can be written.
- Query message

a. Slave Address	b. Function	c. Register Address		d. Preset Data		CRC Check	
(8 bits)	H06 (8 bits)	H (8 bits)	L (8 bits)	H (8 bits)	L (8 bits)	L (8 bits)	H (8 bits)

- Normal response (Response message)

a. Slave Address	b. Function	c. Register Address		d. Preset Data		CRC Check	
(8 bits)	H06 (8 bits)	H (8 bits)	L (8 bits)	H (8 bits)	L (8 bits)	L (8 bits)	H (8 bits)

- Query message setting

Message		Description
a	Slave Address	Set the address to send messages to. Setting "0" enables broadcast communication.
b	Function	Set H06.
c	Register Address	Set the address from data is written to the holding register. Register address = holding register address (decimal) - 40001 For example, when register address 0001 is set, data is written to holding register address 40002.
d	Preset Data	Set the data to write to the holding register. Write data is fixed at 2 bytes.

- Content of normal response
  With a normal response, the content is the same as **a to d** (including the CRC check) query messages.
  In the case of broadcast communication, no response is returned.

Example) Write 60Hz (H1770) to 40014 (running frequency) of slave address 5 (H05).

Query message

Slave Address	Function	Register Address		Preset Data		CRC Check	
H05 (8 bits)	H06 (8 bits)	H00 (8 bits)	H0D (8 bits)	H17 (8 bits)	H70 (8 bits)	H17 (8 bits)	H99 (8 bits)

Normal response (Response message)

Same data as query message

上正科技有限公司
購買、維修 此主機零組件
電話： 037-466333
Email: service@repairtw.com
Line id: @zzzz
www.repairtw.com

REMARKS

- With broadcast communication, no response is generated even if a query is executed, so when the next query is made, it must be made after waiting for the inverter data processing time after the previous query is executed.

(8) Diagnostics (diagnosis of functions) (H08 or 08)

- A communication check can be made since the query message is sent and the query message is returned as it is as the return message (subfunction code H00 function).
  Subfunction code H00 (Return Query Data)
- Query message

a. Slave Address	b. Function	c. Subfunction		d. Data		CRC Check	
(8 bits)	H08 (8 bits)	H00 (8 bits)	H00 (8 bits)	H (8 bits)	L (8 bits)	L (8 bits)	H (8 bits)

- Normal response (Response message)

a. Slave Address	b. Function	c. Subfunction		d. Data		CRC Check	
(8 bits)	H08 (8 bits)	H00 (8 bits)	H00 (8 bits)	H (8 bits)	L (8 bits)	L (8 bits)	H (8 bits)

(N) Operation via communication and its settings

- Query message setting

Message		Description
a	Slave Address	Set the address to send messages to. Broadcast communication is not possible. (Invalid when "0" is set.)
b	Function	Set H08.
c	Subfunction	Set H0000.
d	Data	Any data 2 bytes long can be set. Setting range is H0000 to HFFFF.

- Content of normal response

  With a normal response, the content is the same as **a to d** (including the CRC check) query messages.

REMARKS

- With broadcast communication, no response is generated even if a query is executed, so when the next query is made, it must be made after waiting for the inverter data processing time after the previous query is executed.

(9) Preset Multiple Registers (writing of data to multiple holding registers) (H10 or 16)

- Data can be written to multiple holding registers.
- Query message

a. Slave Address	b. Function	c.Starting Address		d.No. of Registers		e. ByteCount	f. Data			CRC Check	
(8 bits)	H10 (8 bits)	H (8 bits)	L (8 bits)	H (8 bits)	L (8 bits)	(8 bits)	H (8 bits)	L (8 bits)	... (n × 2 × 8 bits)	L (8 bits)	H (8 bits)

- Normal response (Response message)

a. Slave Address	b. Function	c. Starting Address		d. No. of Registers		CRC Check	
(8 bits)	H10 (8 bits)	H (8 bits)	L (8 bits)	H (8 bits)	L (8 bits)	L (8 bits)	H (8 bits)

中正科技有限公司
購買、維修 此手冊零組件
電話： 037-466333
Email: service@repairtw.com
Line id: @zzzz
www.repairtw.com

- Query message setting

Message		Description
a	Slave Address	Set the address to send messages to. Setting "0" enables broadcast communication.
b	Function	Set H10.
c	Starting Address	Set the address from which to start writing of data to the holding register. Start address = start register address (decimal) - 40001 For example, when start register address 0001 is set, the data of holding register address 40002 is read.
d	No. of Points	Set the number of holding registers to write to. Data can be written to up to 125 registers.
e	Byte Count	The setting range is H02 to HFA (2 to 250). Set twice the value specified by **d**.
f	Data	Set the amount of data specified by **d**. Set write data Hi bytes first followed by Lo bytes, and arrange it as follows: data of start address, data of start address+1, data of start address+2, and so forth.

- Content of normal response

  With a normal response, the content is the same as **a to d** (including the CRC check) query messages.

Example) Write 0.5 s(H05) to 41007 **(Pr.7)** and 1 s (H0A) to 41008 **(Pr.8)** of slave address 25 (H19).

Query message

Slave Address	Function	Starting Address		No. of Points		Byte Count	Data				CRC Check	
H19 (8 bits)	H10 (8 bits)	H03 (8 bits)	HEE (8 bits)	H00 (8 bits)	H02 (8 bits)	H04 (8 bits)	H00 (8 bits)	H05 (8 bits)	H00 (8 bits)	H0A (8 bits)	H86 (8 bits)	H3D (8 bits)

Normal response (Response message)

Slave Address	Function	Starting Address		No. of Points		CRC Check	
H19 (8 bits)	H10 (8 bits)	H03 (8 bits)	HEE (8 bits)	H00 (8 bits)	H02 (8 bits)	H22 (8 bits)	H61 (8 bits)

(10) Read Holding Register access Log (H46 or 70)

- Queries by function codes H03 and H10 are supported.
  The number and start address of holding registers successfully accessed by the previous communication are returned.
  "0" is returned for both the number and start address for queries other than the function codes.
- Query message

a. Slave Address	b. Function	CRC Check	
(8 bits)	H46 (8 bits)	L (8 bits)	H (8 bits)

- Normal response (Response message)

a. Slave Address	b. Function	c. Starting Address		d. No. of Points		CRC Check	
(8 bits)	H46 (8 bits)	H (8 bits)	L (8 bits)	H (8 bits)	L (8 bits)	L (8 bits)	H (8 bits)

- Query message setting

Message		Description
a	Slave Address	Set the address to send messages to. Broadcast communication is not possible. (Invalid when "0" is set.)
b	Function	Set H46.

- Content of normal response

Message		Description
c	Starting Address	The start address of the holding register that was successfully accessed is returned. Start address = start register address (decimal) - 40001 For example, when start address 0001 is returned, the holding register address that was successfully accessed is 40002.
d	No. of Points	The number of holding registers that were successfully accessed is returned.

Example) Read the successful register start address and number of successful accesses from slave address 25 (H19).

Query message

Slave Address	Function	CRC Check	
H19 (8 bits)	H46 (8 bits)	H8B (8 bits)	HD2 (8 bits)

Normal response (Response message)

Slave Address	Function	Starting Address		No. of Points		CRC Check	
H19 (8 bits)	H10 (8 bits)	H03 (8 bits)	HEE (8 bits)	H00 (8 bits)	H02 (8 bits)	H22 (8 bits)	H61 (8 bits)

Two successful reads of start address 41007 (**Pr.7**) are returned.

上正科技有限公司
購買、維修 各式變頻器
電話： 037-466333
Email: service@repairtw.com
Line id: @zzz
www.repairtw.com

(N) Operation via communication and its settings

(11) Error response

- An error response is returned if the query message received from the master contains an illegal function, address or data. No response is returned for parity, CRC, overrun, framing, and Busy errors.

REMARKS

- No response is also returned in the case of broadcast communication.

- Error response (Response message)

a. Slave Address	b. Function	c. Exception Code	CRC Check	
(8 bits)	H80 + Function (8 bits)	(8 bits)	L (8 bits)	H (8 bits)

	Message	Description
a	Slave Address	Set the address received from the master.
b	Function	The function code requested by the master + H80 is set.
c	Exception Code	The codes in the following table are set.

- Error code list

Code	Error Item	Error description
01	ILLEGAL FUNCTION	The query message from the master is set with a function code that cannot be handled by the slave.
02	ILLEGAL DATA ADDRESS *1	The query message from the master is set with a register address that cannot be handled by the inverter. (No parameter, parameter cannot be read, parameter cannot be written)
03	ILLEGAL DATA VALUE	The query message from the master is set with data that cannot be handled by the inverter. (Out of parameter write range, a mode is specified, other error)

*1 An error does not occur in the following cases:

- Function code H03 (read data of holding register)

When there are 1 or more number of reads (No. of Points) and there is 1 or more holding register from where data can be read

- Function code H10 (write data to multiple holding registers)

When there are 1 or more number of writes (No. of Points) and there is 1 or more holding registers to which data can be written.

In other words, when function code H03 or H10 is used and multiple holding registers are accessed, an error will not occur even if a non-existent holding register or holding register that cannot be read or written is accessed.

上正科技有限公司
購買、維修 此手冊零組件
電話：037 466333
Email: service@repairtw.com
Line Id: @2222
www.repairtw.com

REMARKS

- An error will occur if all accesses holding registers do not exist. The data read value of non-existent holding registers is 0, and data is invalid when written to non-existent holding registers.

- **Error detection of message data**

The following errors are detected in message data from the master. The inverter is not tripped even if an error is detected.

Error check items

Error item	Error description	Inverter operation
Parity error	The data received by the inverter is different from the specified parity (**Pr.334** setting).	When this error occurs, **Pr.343** is incremented by one. When this error occurs, the LF signal is output.
Framing error	The data received by the inverter is different from the stop bit length (**Pr.334**) setting.	
Overrun error	The next data has been sent by the master before the inverter completes receiving the preceding data.	
Message frame error	The data length of the message frame is checked, and an error is generated if the received data length is less than 4 bytes.	
CRC check error	An error is generated if the data in the message frame does not match the calculation result.	

REMARKS

- The LF signal can be assigned to an output terminal by setting **Pr.190 to Pr.196 (output terminal function selection)**. Changing the terminal assignment may affect other functions. Set parameters after confirming the function of each terminal.

(12) Modbus register

•System environmental variables

Register	Definition	Read/Write	Remarks
40002	Inverter reset	Write	Any value can be written
40003	Parameter clear	Write	Set H965A for the write value.
40004	All parameter clear	Write	Set H99AA for the write value.
40006	Parameter clear *1	Write	Set H5A96 for the write value.
40007	All parameter clear *1	Write	Set HAA99 for the write value.
40009	Inverter status/control input command *2	Read/Write	Refer to the following.
40010	Operation mode/inverter setting *3	Read/Write	Refer to the following.
40014	Running frequency (RAM value)	Read/Write	The display can be changed to the rotations per minute using **Pr.37, Pr.144 and Pr.811**. (Refer to page 344)
40015	Running frequency (EEPROM value)	Write	

*1 Communication parameter settings are not cleared.
*2 At a write, the data is set as the control input command.
At a read, the data is read as the inverter running status.
*3 At a write, the data is set as the operation mode setting.
At a read, the data is read as the operation mode setting.

<Inverter status/control input command>

Bit	Definition	
	Control input command	Inverter status
0	Stop command	RUN (Inverter running) *2
1	Forward rotation command	During forward rotation
2	Reverse rotation command	During reverse rotation
3	RH (High-speed operation command) *1	SU (Up to frequency) *2
4	RM (Middle-speed operation command) *1	OL (Overload warning) *2
5	RL (Low-speed operation command) *1	IPF (Instantaneous power failure/ undervoltage) *2
6	JOG (Jog operation selection) *1	FU (Output frequency detection) *2
7	RT (Second function selection) *1	ABC1 (Fault) *2
8	AU (Terminal 4 input selection) *1	ABC2 (-) *2
9	CS (Selection of automatic restart after instantaneous power failure, flying start) *1	Safety monitor output
10	MRS (Output stop) *1	0
11	STOP (Start self-holding selection) *1	0
12	RES (Inverter reset) *1	0
13	0	0
14	0	0
15	0	Fault occurrence

<Operation mode/inverter setting>

Mode	Read value	Write value
EXT	H0000	H0010*3
PU	H0001	H0011*3
EXT JOG	H0002	—
PU JOG	H0003	—
NET	H0004	H0014
PU+EXT	H0005	—

*3 Enable/disable parameter writing by **Pr.79 and Pr.340** settings. For the details, refer to page 307.
Restrictions in each operation mode conform with the computer link specification.

上正科技有限公司 購買、維修數位類零組件 電話： 037-456333 Email: service@repairtw.com Line id: @2222 www.repairtw.com

*1 The signal within parentheses ( ) is the initial status. The description changes depending on the setting of **Pr.180 to Pr.189 (input terminal function selection)** (page 416).
For each of the assigned signals, some signals are enabled by NET and some are disabled. (Refer to page 312.)
*2 The signal within parentheses ( ) is the initial status. The description changes depending on the setting of **Pr.190 to Pr.196 (output terminal function selection)** (page 370).

• Real-time monitor
Refer to page 346 for the register numbers and monitored items of the real time monitor.

(N) Operation via communication and its settings

- Parameters

Pr.	Register	Name	Read/ Write	Remarks
0 to 999	**41000 to 41999**	For details on parameter names, refer to the parameter list (**page 122**).	Read/ Write	The parameter number + 41000 is the register number.
C2 (902)	**41902**	Terminal 2 frequency setting bias (frequency)	Read/ Write	
C3 (902)	**42092**	Terminal 2 frequency setting bias (analog value)	Read/ Write	Analog value (%) set to **C3 (902)**
	43902	Terminal 2 frequency setting bias (terminal analog value)	Read	Analog value (%) of voltage (current) applied to terminal 2
125 (903)	**41903**	Terminal 2 frequency setting gain (frequency)	Read/ Write	
C4 (903)	**42093**	Terminal 2 frequency setting gain (analog value)	Read/ Write	Analog value (%) set to **C4 (903)**
	43903	Terminal 2 frequency setting gain (terminal analog value)	Read	Analog value (%) of voltage (current) applied to terminal 2
C5 (904)	**41904**	Terminal 4 frequency setting bias (frequency)	Read/ Write	
C6 (904)	**42094**	Terminal 4 frequency setting bias (analog value)	Read/ Write	Analog value (%) set to **C6 (904)**
	43904	Terminal 4 frequency setting bias (terminal analog value)	Read	Analog value (%) of current (voltage) applied to terminal 4
126 (905)	**41905**	Terminal 4 frequency setting gain (frequency)	Read/ Write	
C7 (905)	**42095**	Terminal 4 frequency setting gain (analog value)	Read/ Write	Analog value (%) set to **C7 (905)**
	43905	Terminal 4 frequency setting gain (terminal analog value)	Read	Analog value (%) of current (voltage) applied to terminal 4
C12 (917)	**41917**	Terminal 1 bias frequency (speed)	Read/ Write	
C13 (917)	**42107**	Terminal 1 bias (speed)	Read/ Write	Analog value (%) set to **C13 (917)**
	43917	Terminal 1 bias (speed) (terminal analog value)	Read	Analog value (%) of voltage applied to terminal 1
C14 (918)	**41918**	Terminal 1 gain frequency (speed)	Read/ Write	
C15 (918)	**42108**	Terminal 1 gain (speed)	Read/ Write	Analog value (%) set to **C15 (918)**
	43918	Terminal 1 gain (speed) (terminal analog value)	Read	Analog value (%) of voltage applied to terminal 1
C16 (919)	**41919**	Terminal 1 bias command (torque/ magnetic flux)	Read/ Write	
C17 (919)	**42109**	Terminal 1 bias (torque/magnetic flux)	Read/ Write	Analog value (%) set to **C17 (919)**
	43919	Terminal 1 bias (torque/magnetic flux) (terminal analog value)	Read	Analog value (%) of voltage applied to terminal 1
C18 (920)	**41920**	Terminal 1 gain command (torque/ magnetic flux)	Read/ Write	
C19 (920)	**42110**	Terminal 1 gain (torque/magnetic flux)	Read/ Write	Analog value (%) set to **C19 (920)**
	43920	Terminal 1 gain (torque/magnetic flux) (terminal analog value)	Read	Analog value (%) of voltage applied to terminal 1
C9 (930)	**42120**	Current output bias current	Read/ Write	Analog value (%) set to **C9 (930)**
C11 (931)	**42121**	Current output gain current	Read/ Write	Analog value (%) set to **C11 (931)**
C38 (932)	**41932**	Terminal 4 bias command (torque/ magnetic flux)	Read/ Write	
C39 (932)	**42122**	Terminal 4 bias (torque/magnetic flux)	Read/ Write	Analog value (%) set to **C39 (932)**
	43932	Terminal 4 bias (torque/magnetic flux) (terminal analog value)	Read	Analog value (%) of current (voltage) applied to terminal 4
C40 (933)	**41933**	Terminal 4 gain command (torque/ magnetic flux)	Read/ Write	

上正科技有限公司
購買、維修 此手冊零組件
電話： 037-466333
Email: service@repairtw.com
Line id: @zzzz
www.repairtw.com

Pr.	Register	Name	Read/ Write	Remarks
C41 (933)	42123	Terminal 4 gain (torque/magnetic flux)	Read/ Write	Analog value (%) set to **C41 (933)**
	43933	Terminal 4 gain (torque/magnetic flux) (terminal analog value)	Read	Analog value (%) of current (voltage) applied to terminal 4
C42 (934)	41934	PID display bias coefficient	Read/ Write	
C43 (934)	42124	PID display bias analog value	Read/ Write	Analog value (%) set to **C43 (934)**
	43934	PID display bias analog value (terminal analog value)	Read	Analog value (%) of current (voltage) applied to terminal 4
C44 (935)	41935	PID display gain coefficient	Read/ Write	
C45 (935)	42125	PID display gain analog value	Read/ Write	Analog value (%) set to **C45 (935)**
	43935	PID display gain analog value (terminal analog value)	Read	Analog value (%) of current (voltage) applied to terminal 4
1000 to 1999	45000 to 45359	For details on parameter names, refer to the parameter list (page 122).	Read/ Write	The parameter number + +44000 is the register number.

- Faults history

Register	Definition	Read/Write	Remarks
40501	Faults history 1	Read/Write	Data is 2 bytes and so is stored in "H00○○". The lowest 1 byte can be referred to for the error code. (For details on error codes, refer to page 621.) The faults history is batch-cleared by writing to register 40501. Set any value for the data.
40502	Faults history 2	Read	
40503	Faults history 3	Read	
40504	Faults history 4	Read	
40505	Faults history 5	Read	
40506	Faults history 6	Read	
40507	Faults history 7	Read	
40508	Faults history 8	Read	

上正科技有限公司
購買、維修 更換零組件
電話： 037-466333
Email: service@repairtw.com
Line id: @zzzz
www.repairtw.com

- Model information monitor

Register	Definition	Read/Write	Remarks
44001	Model (First and second characters)	Read	Reading inverter type in ASCII code. "H20" (blank code) is set for blank area. Example of FR-A840-1 (FM type) H46, H52, H2D, H41, H38, H34, H30, H2D, H31, H20.....H20
44002	Model (Third and fourth characters)	Read	
44003	Model (Fifth and sixth characters)	Read	
44004	Model (Seventh and eighth characters)	Read	
44005	Model (Ninth and tenth characters)	Read	
44006	Model (Eleventh and twelfth characters)	Read	
44007	Model (Thirteenth and fourteenth characters)	Read	
44008	Model (Fifteenth and sixteenth characters)	Read	
44009	Model (Seventeenth and eighteenth characters)	Read	
44010	Model (Nineteenth and twentieth characters)	Read	
44011	Capacity (First and second characters)	Read	Reading inverter capacity in ASCII code. Data is read in increments of 0.1kW, and rounds down to 0.01kW increments. "H20" (blank code) is set for blank area. Example 0.75K ..... " 7" (H20, H20, H20, H20, H20, H37)
44012	Capacity (Third and fourth characters)	Read	
44013	Capacity (Fifth and sixth characters)	Read	

REMARKS

- When a 32-bit parameter setting or monitored value is read and the read value exceeds HFFFF, the reply data will be HFFFF.

(N) Operation via communication and its settings

(13) Pr.343 Communication error count

The communication error occurrence count can be checked.

Parameter	Setting range	Minimum setting range	Initial value
343	(Read only)	1	0

REMARKS

- The communication error count is temporarily stored in the RAM memory. The value is not stored in EEPROM, and so is cleared to 0 when power is reset and the inverter is reset.

(14) Output signal LF "alarm output (communication error warning)"

During a communication error, the alarm signal (LF signal) is output by open collector output. Assign the terminal to be used using any of **Pr.190 to Pr.196 (output terminal function selection)**.

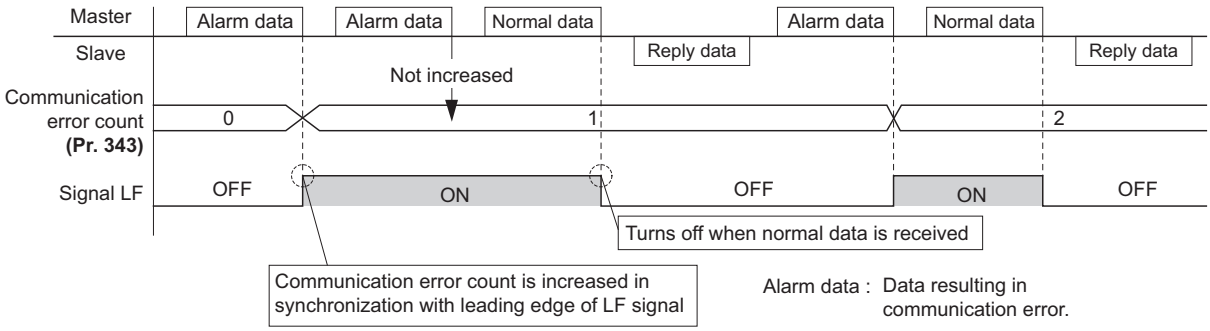

REMARKS

- The LF signal can be assigned to an output terminal by setting **Pr.190 to Pr.196**. Changing the terminal assignment may affect other functions. Set parameters after confirming the function of each terminal.

上正科技有限公司
購買、維修此手冊零組件
電話： 037-466333
Email: service@repairtw.com
Line id: @zzzz
www.repairtw.com

(15) Signal loss detection (Pr.539 Modbus-RTU communication check time interval)

- If a signal loss (communication) is detected between the inverter and the master as a result of a signal loss detection, an inverter communication fault (E.SER) occurs and the inverter trips.
- When the setting is "9999", communication check (signal loss detection) is not made.
- When the setting is "0", reading, etc. of monitors and parameters is possible, though a Communication fault (inverter) (E.SER) occurs instantly when the Network operation mode is switched to.
- A signal loss detection is made when the setting is any of "0.1 s to 999.8 s". To make a signal loss detection, it is necessary to send data from the master within the communication check time interval. (The inverter makes a communication check (clearing of communication check counter) regardless of the station number setting of the data sent from the master).
- The communication check is made from the first communication in the Network operation mode (can be changed by **Pr.551 PU mode operation command source selection**).
- The communication check time by query communication includes a no data time (3.5 bytes).
  This no data time differs according to the communication speed, so take this time no data time into consideration when setting the communication check time.

Example: RS-485 terminal communication, **Pr. 539** = "0.1 to 999.8s"

Query communication

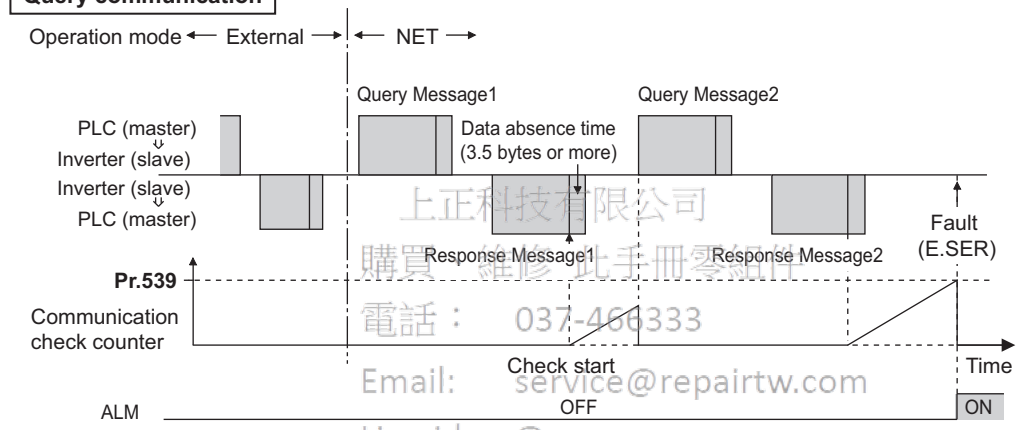

上正科技有限公司
購買 維修 此手冊零組件
電話： 037-466333
Email: service@repairtw.com
Line id: @zzzz
www.repairtw.com

Broadcast communication

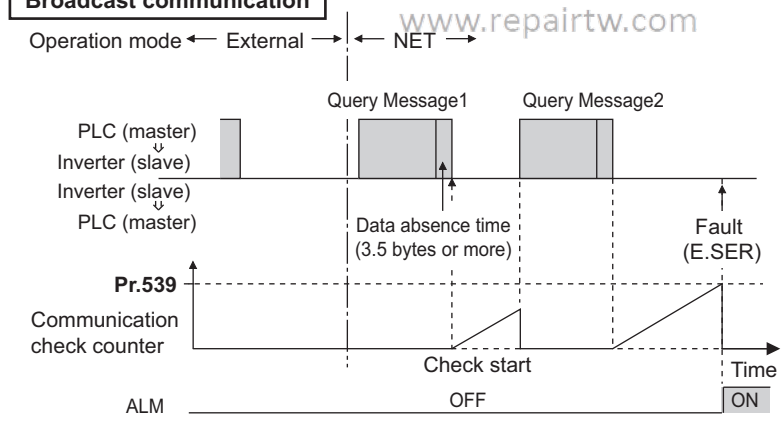

REMARKS

- For the RS-485 terminal communication, the operation at a communication error occurrence depends on the **Pr.502** Stop mode selection at communication error setting. (Refer to page 541)

5.15.7 USB device communication

A personal computer and an inverter can be connected with a USB cable. Setup of the inverter can be easily performed with FR Configurator2.

- The inverter can be connected simply to a personal computer by a USB cable.

Pr.	Name	Initial value	Setting range	Description
547*1 N040	USB communication station number	0	0 to 31	Inverter station number specification
548*1 N041	USB communication check time interval	9999	0	USB communication is possible, however the inverter will trip (E.USB) when the mode changes to the PU operation mode.
			0.1 to 999.8 s	Set the communication check time interval. If a no-communication state persists for longer than the permissible time, the inverter will trip (E.USB).
			9999	No communication check

*1 Changed setting value becomes valid at power ON or the inverter reset.

(1) USB communication specifications

Interface	Conforms to USB1.1 (USB2.0 full speed)
Transmission speed	12 Mbps
Wiring length	Maximum 5 m
Connector	USB mini B connector (receptacle)
Power supply	Self-powered
Recommended USB cable	MR-J3USBCBL3M (cable length 3 m)

卡止科技有限公司
購買、維修 此手冊零組件
電話： 037-466333
Email: service@repairtw.com
Line Id: @zzzz
www.repairtw.com

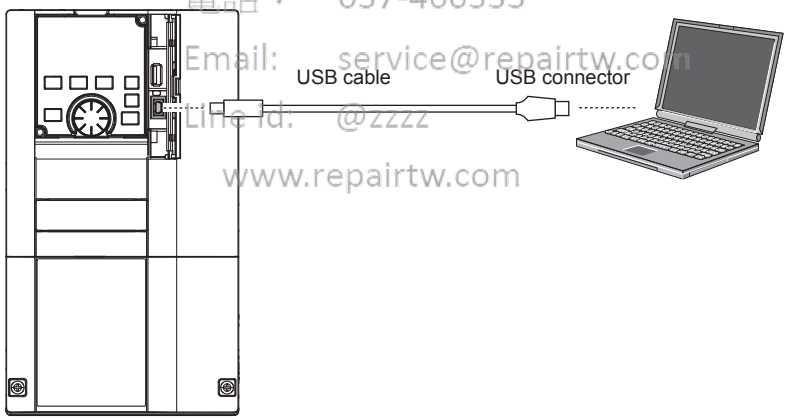

- At the initial setting (**Pr.551 PU mode operation command source selection** = "9999"), communication with FR Configurator2 can be made in the PU operation mode simply by connecting a USB cable. To fix the command source to the USB connector in the PU operation mode, set "3" to **Pr.551.**
- Parameter setting and monitoring can be performed by FR Configurator2. For details, refer to the Instruction Manual of FR Configurator2.

♦ **Parameters referred to** ♦

Pr.551 PU mode operation command source selection ☞ page 308

5.15.8 Automatic connection with GOT

When the automatic connection is enabled in the GOT2000 series, the inverter can communicate with the GOT only with the station number setting and connected to the GOT. This eliminates the need for the communication parameter setting.

Pr.	Name	Initial value	Setting range	Description
117 **N020**	**PU communication station number**	0	0 to 31	Set the inverter station numbers. The inverter station number setting is required when multiple inverters are connected to one GOT (PU connector communication).
331 **N030**	**RS-485 communication station number**	0	0 to 31 (0 to 247)*1*2	Set the inverter station numbers. The inverter station number setting is required when multiple inverters are connected to one GOT (RS-485 terminal communication).

*1 When **Pr.549 Protocol selection** = "1" (Modbus-RTU protocol), the setting range is as shown in the parentheses.

*2 When the set value is outside of the setting range, the initial value is applied.

(1) Automatic connection system configuration

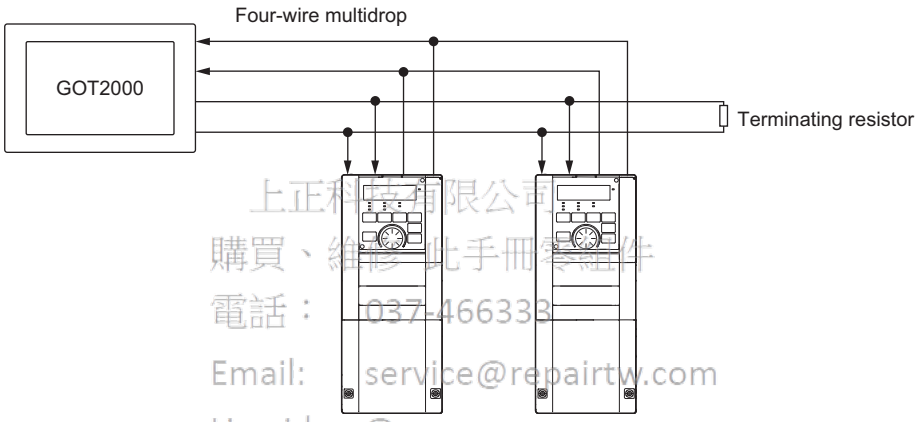

上正科技有限公司
購買、維修此手冊零組件
電話： 037-466333
Email: service@repairtw.com
Line id: @zzzz
www.repairtw.com

(2) GOT2000 series automatic recognition

- When the GOT2000 series is connected, the parameters required for the GOT connection are automatically changed by setting the automatic recognition on the GOT2000 series side.
- Set the station number (**Pr.117** or **Pr.331**) of the inverter before the automatic recognition is performed.
- Connect all the stations of inverters with GOT before the automatic recognition is performed. The inverter newly added after the automatic recognition is not recognized automatically. (When an inverter is added, perform the initial setting in **Pr.999 Automatic parameter setting** or set the automatic recognition on the GOT side again.)

Automatic change item	Automatic change parameter		Setting value after change
	PU connector connection	RS-485 terminal connection	
Communication speed	**Pr.118**	**Pr.332**	Depending on the setting of the connected device on the GOT side.
Data length/stop bit	**Pr.119**	**Pr.333**	
Parity	**Pr.120**	**Pr.334**	
Waiting time setting	**Pr.123**	**Pr.337**	
CR/LF selection	**Pr.124**	**Pr.341**	
Number of communication retries	**Pr.121**	**Pr.335**	9999 (fixed)
Communication check time interval	**Pr.122**	**Pr.336**	9999 (fixed)
Protocol selection	**—** (**Pr.549** holds the value before the automatic recognition.)	**Pr.549**	0 (fixed to Mitsubishi inverter protocol)

REMARKS

- If the automatic recognition cannot be performed, initial setting in **Pr.999** is required.
- For connection to a device other than the GOT2000 series, initial setting in **Pr.999** is required.
- For details, refer to the GOT2000 Series Connection Manual (Mitsubishi Product) (SH-081197ENG).

♦ Parameters referred to ♦

Pr.999 Automatic parameter setting ☞ page 264

5.16 (G) Control parameters

Purpose	Parameter to set			Refer to page
To set the starting torque manually	Manual torque boost	P.G000, P.G010, P.G020	Pr.0, Pr.46, Pr.112	577
To set the motor constant	Base frequency, base frequency voltage	P.G001, P.G002, P.G011, P.G021	Pr.3, Pr.19, Pr.47, Pr.113	578
To select the V/F pattern matching the application	Load pattern selection	P.G003	Pr.14	580
To perform energy saving operation	Energy saving operation	P.G030	Pr.60	582
To use a special motor	Adjustable 5 points V/F	P.C100, P.G040 to P.G049	Pr.71, Pr.100 to Pr.109	583
To adjust the motor braking torque	DC injection brake, zero speed control, and servo lock, magnetic flux decay output shutoff	P.G100 to P.G103, P.G110	Pr.10 to Pr.12, Pr.802, Pr.850	584
To coast the motor to a stop	Output stop function	P.G105	Pr.522	590
	Selection of motor stop method	P.G106	Pr.250	592
To use the regeneration unit to increase the motor braking torque	Regenerative brake selection	P.E300, P.G107, P.T721	Pr.30, Pr.70, Pr.599	593
To operate the inverter with DC power supply	DC feeding mode	P.E300	Pr.30	593
To avoid overvoltage alarm due to regenerative driving by automatic adjustment of the output frequency	Regeneration avoidance function	P.G120 to P.G125	Pr.882 to Pr.886, Pr.665	599
To decrease the deceleration time of the motor	Increased magnetic excitation deceleration	P.G130 to P.G132	Pr.660 to Pr.662	601
To select the control method	Control method selection	P.G200, P.G300	Pr.800, Pr.451	160
To secure the low-speed torque by compensating the slip of the motor	Slip compensation	P.G203 to P.G205	Pr.245 to Pr.247	602
To select the torque characteristic	Constant output range torque characteristic selection	P.G210	Pr.803	181, 211
To adjust the speed control gain	Speed control gain	P.G211, P.G212 P.G311, P.G312	Pr.820, Pr.821, Pr.830, Pr.831	188
To adjust the torque control gain	Torque control gain	P.G213, P.G214, P.G313, P.G314	Pr.824, P.825, Pr.834, P.835	219
To stabilizes speed and torque feedback signal	Speed detection filter, torque detection filter	P.G215, P.G216, P.G315, P.G316	Pr.823, Pr.827, Pr.833, Pr.837	248
To changes excitation ratio	Excitation ratio	P.G217	Pr.854	249
To improve the motor trackability for the speed command changes	Speed feed forward control, model adaptive speed control	P.G224, P.G220 to P.G222, P.G223	Pr.828, Pr.877 to Pr.879, Pr.881	196
To make starting torque start-up faster	Torque bias	P.G230 to P.G238	Pr.840 to Pr.848	198
To make the motor speed constant by the encoder	Encoder feedback control	P.M002, P.A107, P.C140, P.C141, P.G240, P.G241	Pr.144, Pr.285, Pr.359, Pr.367 to Pr.369	603
To select low-speed range torque characteristics	Low-speed range torque characteristics	P.G250, P.G350	Pr.788, Pr.747	173
To perform frequency control appropriate for load torque	Droop control	P.G400 to P.G404	Pr.286 to Pr.288, Pr.994, Pr.995	605
To suppress the machine resonance	Speed smoothing control	P.G410, P.G411	Pr.653, Pr.654	607
	Notch filter	P.G601 to P.G603	Pr.1003 to Pr.1005	204
To adjust the speed gain for Advanced magnetic flux vector control	Speed control gain	P.G932, P.G942	Pr.89, Pr.569	167

上正科技有限公司
購買、維修 此手冊零組件
電話： 037-466333
Email: service@repairtw.com
www.repairtw.com

5.16.1 Manual torque boost V/F

Voltage drop in the low-frequency range can be compensated, improving reduction of the motor torque in the low-speed range.

- Motor torque in the low-frequency range can be adjusted according to the load, increasing the motor torque at the start up.
- By using the RT signal or X9 signal, it is possible to switch between 3 types of torque boost.

Pr.	Name	Initial value	Setting range	Description
0 G000	Torque boost	6%*1	0 to 30%	Set the output voltage at 0 Hz in %.
		4%*2		
		3%*3		
		2%*4		
		1%*5		
46 G010	Second torque boost	9999	0 to 30%	Set the torque boost value at when RT signal is ON.
			9999	Without second torque boost
112 G020	Third torque boost	9999	0 to 30%	Set the torque boost value at when X9 signal is ON.
			9999	Without third torque boost

*1 Initial value for the FR-A820-00077(0.75K) or lower and FR-A840-00038(0.75K) or lower.
*2 Initial values for the FR-A820-00105(1.5K) to FR-A820-00250(3.7K), FR-A840-00052(1.5K) to FR-A840-00126(3.7K).
*3 Initial values for the FR-A820-00340(5.5K), FR-A820-00490(7.5K), FR-A840-00170(5.5K), FR-A840-00250(7.5K).
*4 Initial values for the FR-A820-00630(11K) to FR-A820-03160(55K), FR-A840-00310(11K) to FR-A840-01800(55K).
*5 Initial value for the FR-A820-03800(75K) or higher and FR-A840-02160(75K) or higher.

(1) Starting torque adjustment

上正科技有限公司
Email: service@repairtw.com
Line id: Rzzzz
www.repairtw.com

- Assuming **Pr.19 Base frequency voltage** is 100%, set the output voltage at 0 Hz to **Pr.0 (Pr.46, Pr.112)** in percentage.
- Perform the adjustment of the parameter little by little (approximately 0.5%), and confirm the status of the motor each time. The motor may overheat when the value is set too high. Do not use more than 10% as a guideline.

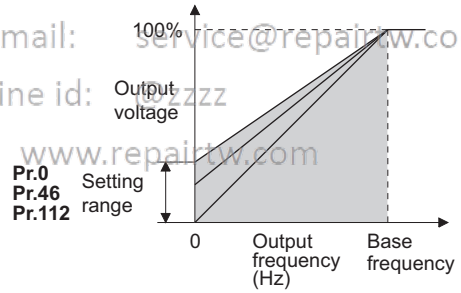

(2) Setting multiple torque boosts (RT signal, X9 signal, Pr.46, Pr.112)

- When changing the torque boost depending on the usage or when using single inverter switching between multiple motors, use the **second (third) torque boost**.
- **Pr.46 Second torque boost** will become enabled when the RT signal turns ON.
- **Pr.112 Third torque boost** will become enabled when X9 signal turns ON. Set "9" in **Pr.178 to Pr.189 (input terminal function selection)** to assign X9 signal function to a terminal.

REMARKS

- The RT (X9) signal acts as the second (third) function selection signal and makes the other second (third) functions valid. (Refer to page 420.)
- The RT signal is assigned to the terminal RT in the initial status. Set "3" in any of **Pr.178 to Pr.189** (input terminal function selection) to assign the RT signal to another terminal.
- Set a larger value when the distance between the inverter and the motor is long or when there is not enough motor torque in the low-speed range. It may cause overcurrent trip when it is set too large.
- Setting for **Pr.0, Pr.46, and Pr.112** becomes enabled only when the V/F control is selected.
- When the initial value is set in **Pr.0**, the **Pr.0** setting is automatically changed by changing the **Pr.71 Applied motor** setting. (Refer to page 424)
- Changing the terminal assignment using **Pr.178 to Pr.189 (input terminal function selection)** may affect the other functions. Set parameters after confirming the function of each terminal.

♦ Parameters referred to ♦

Pr.3 Base frequency, Pr.19 Base frequency voltage ☞ page 578
Pr.71 Applied motor ☞ page 424
Pr.178 to Pr.182 (input terminal function selection) ☞ page 416

5.16.2 Base frequency, voltage V/F

Use this function to adjust the inverter outputs (voltage, frequency) to match with the motor rating.

Pr.	Name	Initial value		Setting range	Description
		FM	CA		
3 G001	**Base frequency**	60 Hz	50 Hz	0 to 590 Hz	Set the frequency at the rated motor torque. (50 Hz/60 Hz)
19 G002	**Base frequency voltage**	9999		0 to 1000 V	Set the base voltage.
				8888	95% of the power supply voltage
				9999	Same as the power supply voltage
47 G011	**Second V/F (base frequency)**	9999		0 to 590 Hz	Set the base frequency at the RT signal ON.
				9999	Second V/F disabled
113 G021	**Third V/F (base frequency)**	9999		0 to 590 Hz	Set the base frequency at the X9 signal ON.
				9999	Third V/F disabled

(1) Setting of base frequency (Pr.3)

- When operating a standard motor, generally set the rated frequency of the motor in **Pr.3 Base frequency**. When the motor operation require switching to the commercial power supply, set the power supply frequency in **Pr.3**.
- When the frequency on the motor rating plate is only "50 Hz", make sure to set to "50 Hz". When it is set to "60 Hz", the voltage will drop too much, causing insufficient torque. As a result, the inverter may trip due to overload.
  A caution is required especially in case of **Pr.14 Load pattern selection** = "1" (variable torque load).
- When using the Mitsubishi constant torque motor, set **Pr.3** to 60 Hz.

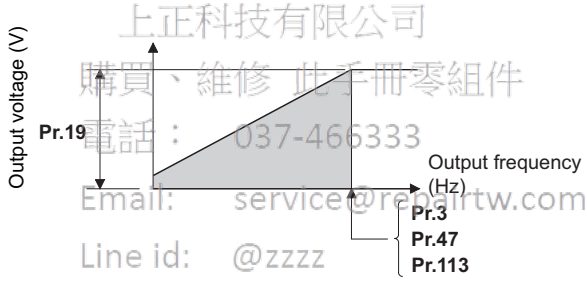

上正科技有限公司
購買、維修 此手冊零組件
電話： 037-466333
Email: service@repairtw.com
Line id: @zzzz
www.repairtw.com

(2) Setting multiple base frequencies (Pr.47, Pr.113)

- To change the base frequency when using single inverter switching between multiple motors, use **Pr.47 Second V/F (base frequency)** and **Pr.113 Third V/F (base frequency)**.
- **Pr.47** will become enabled when the RT signal turns ON and **Pr.113** when the X9 signal turns ON. To input the X9 signal, set "9" in any of **Pr.178 to Pr.189 (input terminal function selection)** to assign the function to a terminal.

REMARKS

- The RT (X9) signal acts as the second (third) function selection signal and makes the other second (third) functions valid. (Refer to page 420.)
- The RT signal is assigned to the terminal RT in the initial status. It is also possible to assign the RT signal to other terminal by setting "3" on **Pr.178 to Pr.189 (input terminal function selection)**.

(3) Setting of base frequency voltage (Pr.19)

- For **Pr.19 Base frequency voltage**, set the base voltage (rated motor voltage, etc.).
- When it is set lower than the power supply voltage, maximum output voltage of the inverter will be the voltage set in **Pr.19**.
- **Pr.19** can be used in following cases.

  (a) Regenerative driving (continuous regeneration, etc.) is performed often

  Output voltage will get higher than the specification during the regenerative driving, which may cause overcurrent trip (E.OC[]) by the increase in motor current.

  (b) When the fluctuation of power supply voltage is high

  When the power supply voltage exceeds the rated voltage of the motor, fluctuation of rotation speed or overheating of motor may occur due to excessive torque or increase in motor current.
- When operating vector control dedicated motor (SF-V5RU, SF-V5RU1, SF-V5RU3, SF-V5RU4, SF-VR) with V/F control, perform following settings.

Motor model	Pr.19 setting	Pr.3 setting
SF-V5RU-3.7kW or lower	170 V	50 Hz
SF-V5RU-5.5kW or lower	160 V	
SF-V5RUH-3.7kW or lower	340 V	
SF-V5RUH-5.5kW or lower	320 V	
SF-V5RU1-30kW or lower	160 V	33.33 Hz
SF-V5RU1-37kW	170 V	
SF-V5RU3-22kW or lower	160 V	
SF-V5RU3-30kW	170 V	
SF-V5RU4-3.7kW and 7.5kW	150 V	16.67 Hz
SF-V5RU4 and motors other than described above	160 V	
SF-VR	160 V	50 Hz
SF-VRH	320 V	

上正科技有限公司
購買、維修 此手冊零組件
電話： 037-466333
Email: service@repairtw.com
Line Id: @zzzz
www.repairtw.com

REMARKS

- When the operation becomes not possible due to failure in encoder, etc., at the time of vector control, set **Pr.80 Motor capacity** or **Pr.81 Number of motor poles** = "9999" to perform V/F control.
- When the Advanced magnetic flux vector control, Real sensorless vector control, vector control, or PM sensorless vector control is selected, **Pr.3, Pr.47, Pr.113, and Pr.19** will become disabled, and **Pr.83 and Pr.84** will become enabled.
  However, S-pattern curve with **Pr.29 Acceleration/deceleration pattern selection** = "1" (S-pattern acceleration/deceleration A) will make **Pr.3** or **Pr.47 and Pr.113** enabled. (S-pattern curve at the time of the PM sensorless vector control is the rated frequency of the motor.)
- When **Pr.71 Applied motor** = "2" (adjustable 5 points V/F), setting for **Pr.47** and **Pr.113** will become disabled. Also, **Pr.19** cannot be set to "8888" or "9999".
- Changing the terminal assignment using **Pr.178 to Pr.189 (input terminal function selection)** may affect the other functions. Set parameters after confirming the function of each terminal.

♦ **Parameters referred to** ♦

Pr.14 Load pattern selection ☞ page 580
Pr.29 Acceleration/deceleration pattern selection ☞ page 283
Pr.71 Applied motor ☞ page 424
Pr.83 Rated motor voltage, Pr.84 Rated motor frequency ☞ page 428
Pr.178 to Pr.189 (input terminal function selection) ☞ page 416

5.16.3 Load pattern selection V/F

Optimal output characteristics (V/F characteristics) for application or load characteristics can be selected.

Pr.	Name	Initial value	Setting range	Description
14 G003	Load pattern selection	0	0	For constant-torque load
			1	For variable-torque load
			2	For constant-torque lift (boost at reverse rotation 0%)
			3	For constant-torque lift (boost at forward rotation 0%)
			4	RT signal ON..... for constant-torque load RT signal OFF..... for constant-torque lift, boost at reverse rotation 0%
			5	RT signal ON..... for constant-torque load RT signal OFF..... for constant-torque lift, boost at forward rotation 0%

(1) Application for constant-torque load (Pr.14 = "0", initial value)

- The output voltage will change linearly against the output frequency at the base frequency or lower.
- Set this parameter when driving a load that has constant load torque even when the rotation speed is changed, such as conveyor, dolly, or roll drive.

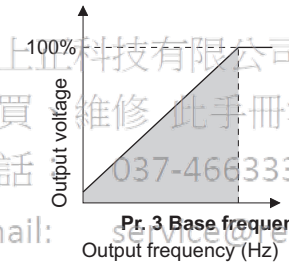

上正科技有限公司
購買、維修 此手冊零組件
電話：037-466333
Email: service@repairtw.com
Line id: @zzzz
www.repairtw.com

POINT

Select for constant-torque load (setting value "0") even for fan and pump in following cases.

- When accelerating a blower with large moment of inertia (J) in a short period of time.
- When it is a constant-torque load such as rotary pump or gear pump.
- When the load torque increases in low speed such as screw pump.

(2) Application for variable-torque load (Pr.14 = "1")

- The output voltage will change in square curve against the output frequency at the base frequency or lower. (1.75th-power curve for FR-A820-01870(37K) or higher, and FR-A840-00930(37K) or higher)
- Set this parameter when driving a load with load torque change proportionally against the square of the rotation speed, such as fan and pump.

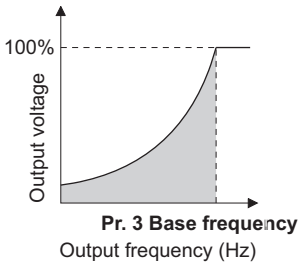

(3) Vertical lift load applications (Pr. 14 = "2, 3")

- Set "2" when a vertical lift load is fixed as power driving load at forward rotation and regenerative load at reverse rotation.
- **Pr. 0 Torque boost** is valid during forward rotation, and torque boost is automatically changed to "0%" during reverse rotation.
- Set "3" for an elevated load that is in the driving mode during reverse rotation and in the regenerative load mode during forward rotation according to the load weight, e.g. counterweight system.

Pr.14 = 2

For vertical lift loads
At forward rotation boost...**Pr.0** setting
At reverse rotation boost...0%

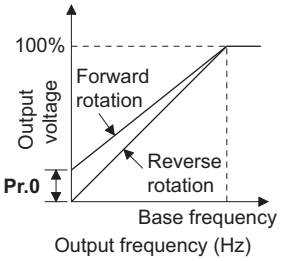

Pr.14 = 3

For vertical lift loads
At forward rotation boost...0%
At reverse rotation boost...**Pr.0** setting

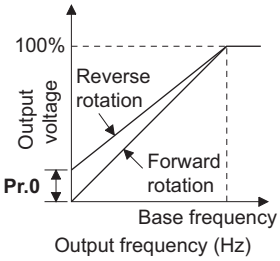

REMARKS

- When torque is continuously regenerated as vertical lift load, it is effective to set the rated voltage in **Pr. 19 Base frequency voltage** to prevent trip due to current at regeneration.

(4) Switching applied load selection with a terminal (Pr.14 = "4, 5")

- It is possible to switch between for constant-torque load and for lift with RT signal or X17 signal.
- To input the X17 signal, set "17" in any of **Pr.178 to Pr.189 (input terminal function selection)** to assign the function.
- Switching with RT signal will become disabled when X17 signal is assigned.

Pr.14 setting	RT (X17) signal	Output characteristics
4	ON	For constant-torque load (same as setting value "0")
	OFF	For lift, boost at reverse rotation 0% (same as setting value "2")
5	ON	For constant-torque load (same as setting value "0")
	OFF	For lift, boost at forward rotation 0% (same as setting value "3")

工正科技有限公司
購買、維修、此主机零組件
電話： 037-466333
Email: service@repairtw.com
Line id: @222

REMARKS

- The RT signal is assigned to the terminal RT in the initial status. Set "3" in any of **Pr.178 to Pr.189 (input terminal function selection)** to assign the RT signal to another terminal.
- Changing the terminal assignment using **Pr.178 to 189** may affect other functions. Set parameters after confirming the function of each terminal.
- **Pr.14** will become enabled at the time of V/F control.
- Other second functions will become enabled when the RT signal is ON.

♦ Parameters referred to ♦

Pr.0 Torque boost ☞page 577
Pr.3 Base frequency ☞page 578
Pr.178 to Pr.182 (input terminal function selection) ☞page 416

5.16.4 Energy saving control V/F Magnetic flux

Inverter will perform energy saving control automatically even when the detailed parameter settings are made.
It is appropriate for applications such as fan and pump.

Pr.	Name	Initial value	Setting range	Description
60 G030	Energy saving control selection	0	0	Normal operation
			4	Energy saving operation
			9	Optimum excitation control

(1) Energy saving operation (setting "4")

- Setting **Pr.60** = "4" will select the energy saving operation.
- With the energy saving operation, the inverter will automatically control the output voltage so the inverter output power during the constant-speed operation will become minimal.
- The operation is enabled under V/F control.

(2) Optimum excitation control (setting "9")

- Setting **Pr.60** = "9" will select the Optimum excitation control.
- The Optimum excitation control is a control method to decide the output voltage by controlling the excitation current so the efficiency of the motor is maximized.
- The operation is enabled under V/F control and Advanced magnetic flux vector control.

REMARKS

- An energy saving effect is not expected with the energy saving operation mode for applications with high load torque or with the equipment with frequent acceleration and deceleration.
- An energy saving effect is not expected with the Optimum excitation control mode when the motor capacity is extremely small compared with the inverter capacity or when multiple motors are connected to a single inverter.
- When the energy saving operation mode or Optimum excitation control mode is selected, the deceleration time may become longer than setting value. Also, it may cause overvoltage more often compared to constant-torque load characteristics, so set the deceleration time longer.
- When the motor becomes unstable during the acceleration, set the acceleration time longer.
- Output current may increase slightly with the energy saving operation mode or the Optimum excitation control mode since the output voltage is controlled.

上亞科技有限公司
購買、維修 此手冊零組件
電話： 037-466333
Email: service@repairtw.com
Line id: @zzzz
www.repairtw.com

5.16.5 Adjustable 5 points V/F

By setting a desired V/F characteristic from the start up to the base frequency or base voltage with the V/F control (frequency voltage/frequency), a dedicated V/F pattern can be generated.
Optimal V/F pattern matching the torque characteristics of the facility can be set.

Pr.	Name	Initial value	Setting range	Description
71 C100	**Applied motor**	0	2	Standard motor (such as SF-JR) Adjustable 5 points V/F
			Others	Refer to page 424.
100 G040	**V/F1(first frequency)**	9999	0 to 590 Hz, 9999	Set each point of the V/F pattern (frequency, voltage). 9999: Do not set V/F
101 G041	**V/F1(first frequency voltage)**	0 V	0 to 1000 V	
102 G042	**V/F2(second frequency)**	9999	0 to 590 Hz, 9999	
103 G043	**V/F2(second frequency voltage)**	0 V	0 to 1000 V	
104 G044	**V/F3(third frequency)**	9999	0 to 590 Hz, 9999	
105 G045	**V/F3(third frequency voltage)**	0 V	0 to 1000 V	
106 G046	**V/F4(fourth frequency)**	9999	0 to 590 Hz, 9999	
107 G047	**V/F4(fourth frequency voltage)**	0 V	0 to 1000 V	
108 G048	**V/F5(fifth frequency)**	9999	0 to 590 Hz, 9999	
109 G049	**V/F5(fifth frequency voltage)**	0 V	0 to 1000 V	

上正科技有限公司
購買、維修 此手冊零組件
電話： 037-466333
Email: service@repairtw.com
Line id: @zzzz
www.repairtw.com

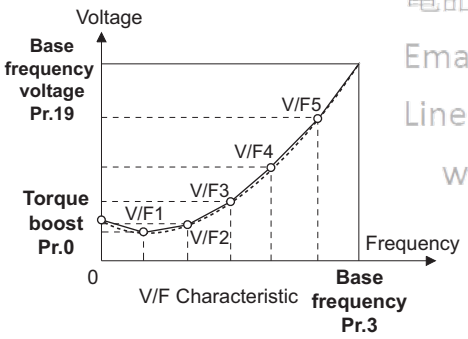

- By setting the **V/F1 (first frequency voltage/first frequency) to V/F5** parameters in advance, a desired V/F characteristic can be obtained.
- For an example, with the equipment with large static friction factor and small dynamic friction factor, large torque is required only at the start up, so a V/F pattern that will raise the voltage only at the low-speed range is set.
- Setting procedure
  1) Set the rated motor voltage in **Pr.19 Base frequency voltage**.
  2) Set **Pr.71 Applied motor** = "2" (adjustable 5 points V/F).
  3) Set frequency and voltage to be set in **Pr.100 to Pr.109**.

⚠ Caution

⚠ **Make sure to set this parameter correctly according to the motor used. Incorrect setting may cause the motor to overheat and burn.**

REMARKS

- Adjustable 5 points V/F will become enabled at the time of V/F control.
  At the time of **Pr.19 Base frequency voltage** = "8888, 9999", setting of **Pr.71** = "2" cannot be made. When setting **Pr.71** = "2", set the rated motor voltage in **Pr.19**.
- Read only error (Er 1) is generated when the frequency value for each point is same.
- Set each point for **Pr.100 to Pr.109** (frequency, voltage) within the range of **Pr.3 Base frequency and Pr.19 Base frequency voltage**.
- When **Pr.71** = "2", **Pr.47 Second V/F (base frequency)** and **Pr.113 Third V/F (base frequency)** will not function.
- When **Pr.71** = "2", electronic thermal O/L relay will make calculations assuming a standard motor.
- By simultaneously using **Pr.60 Energy saving control selection** and the adjustable 5 points V/F, further energy saving effect is expected.
- The **Pr.0 Torque boost** and **Pr.12 DC injection brake operation voltage** settings are automatically changed according to the **Pr.71** setting. (Refer to page 427)

♦ Parameters referred to ♦

Pr.0 Torque boost ☞page 577
Pr.3 Base frequency, Pr.19 Base frequency voltage ☞page 578
Pr.12 DC injection brake operation voltage ☞page 584
Pr.47 Second V/F (base frequency), Pr.113 Third V/F (base frequency) ☞page 583
Pr.60 Energy saving control selection ☞page 582
Pr.71 Applied motor, Pr.450 Second applied motor ☞page 424

5.16.6 DC injection brake, zero speed control, and servo lock

- Timing to stop or braking torque can be adjusted by applying DC injection brake at the time of stopping motor.
  Zero speed control can also be selected at the time of the Real sensorless vector control, and zero speed control and servo lock can be selected at the time of vector control or PM sensorless vector control.
  DC injection brake is preventing the motor shaft to turn by applying DC voltage to the motor, and the other hand, zero speed control is using vector control to maintain 0 r/min. Either way, the motor shaft will not return to its original position when it is rotated due to external force.
  Servo lock will maintain the position of the motor shaft. When a motor shaft is rotated by external force, it goes back to the original position.
- Select the magnetic flux decay output shutoff function to decay the magnetic flux before shutting off the output at a stop.

Pr.	Name	Initial value	Setting range	Description
10 G100	DC injection brake operation frequency	3 Hz	0 to 120 Hz	Set the operation frequency for the DC injection brake (zero speed control and servo lock).
			9999	Operate at **Pr.13** or lower
11 G101	DC injection brake operation time	0.5 s	0	Without DC injection brake (zero speed control and servo lock)
			0.1 to 10 s	Set the operation time for the DC injection brake (zero speed control and servo lock).
			8888	Operate with X13 signal ON
12 G110	DC injection brake operation voltage	4%*1 2%*2 1%*3	0 to 30%	Set the DC injection brake voltage (torque). When set to "0", there will be without DC injection brake.
802 G102	Pre-excitation selection	0	0	Zero speed control
			1	Servo lock
850 G103	Brake operation selection	0	0	DC injection brake operation
			1	Zero speed control (Real sensorless vector control)
			2	Magnetic flux decay output shutoff (Real sensorless vector control)

*1 Initial value for the FR-A820-00490(7.5K) or lower and FR-A840-00250(7.5K) or lower.
*2 Initial values for the FR-A820-00630(11K) to FR-A820-03160(55K), FR-A840-00310(11K) to FR-A840-01800(55K).
*3 Initial value for the FR-A820-03800(75K) or higher and FR-A840-02160(75K) or higher.

上正科技有限公司
購買、維修 此手冊零組件
電話：037-466233
Email: service@repairtw.com
Line id: @zzzz
www.repairtw.com

(1) Setting of operating frequency (Pr.10)

- By setting the frequency to operate the DC injection brake (zero speed control and servo lock) to **Pr.10 DC injection brake operation frequency**, the DC injection brake (zero speed control and servo lock) will operate when it reaches this frequency at the time of deceleration.
- When **Pr.10** = "9999", DC injection brake (zero speed control, servo lock) will start when the frequency reaches **Pr.13 Starting frequency**.
- The DC injection brake operation frequency depends on the stopping method.

Stopping method	Parameter setting	DC injection brake operation frequency
Press the STOP key on the operation panel Turning OFF of the STF/STR signal	0.5 Hz or higher in **Pr.10**	**Pr.10** setting
	Lower than 0.5 Hz in **Pr.10**, and 0.5 Hz or higher in **Pr.13**	0.5Hz
	Lower than 0.5 Hz in both **Pr.10** and **Pr.13**	**Pr.10** or **Pr.13** setting, whichever larger
Set the frequency to 0 Hz	—	**Pr.13** setting or 0.5 Hz, whichever larger

- DC injection brake operation frequency will be fixed to 0 Hz at the time of PM sensorless vector control (low-speed range high-torque mode disabled).

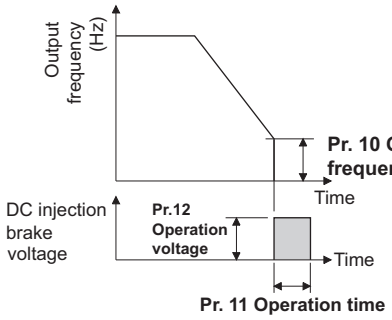

上正科技有限公司
購買、維修 此手冊零組件
電話： 037-466333
Email: service@repairtw.com
Line id: @zzzz
www.repairtw.com

REMARKS

- When executing pre-excitation (zero speed control) at the time of Real sensorless vector control, set **Pr.10 DC injection brake operation frequency** to 0.5 Hz or lower since it may cause motor vibration, etc., at the time of deceleration stop.
- Initial value of **Pr.10** will automatically switch to 0.5 Hz at the time of vector control.

(2) Setting of operation time (X13 signal, Pr.11)

- Set the time applying the DC injection brake (zero speed control and servo lock) to **Pr.11 DC injection brake operation time**.
- When the motor does not stop due to large load moment (J), increasing the setting produces an effect.
- When **Pr.11** = "0 s", DC injection brake (zero speed control and servo lock) will not operate. (The motor will coast to stop.)
- When **Pr.11** = "8888", DC injection brake (zero speed control and servo lock) will operate when the X13 signal is turned ON. DC injection brake will operate when the X13 signal is turned ON even while operating.
- For the X13 signal input, set "13" in any of **Pr.178 to Pr.189** to assign the function.

When **Pr. 11** = "8888"

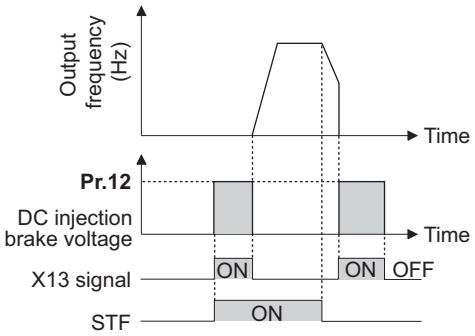

REMARKS

- Under Real sensorless vector control, when the X13 signal turns ON while **Pr.11** = "8888", the zero speed control is activated regardless of the **Pr.850 Brake operation selection** setting.
- At the time of vector control or PM sensorless vector control, the zero speed control or the servo lock will operate depending of the setting of **Pr.802**.
- The X13 signal is disabled during PM sensorless vector control.

(3) Setting of operation voltage (torque) (Pr.12)

- **Pr.12 DC injection brake operation voltage** will set the percent against the power supply voltage. (Not used at the time of zero speed control or servo lock)
- DC injection brake will not operate with setting of **Pr.12** = "0%". (The motor will coast to stop.)

REMARKS

- When the initial value is set in **Pr.12**, the setting corresponding to the motor is set according to the **Pr.71 Applied motor** setting. (Refer to page 427)
  However, when an energy saving motor (SF-HR or SF-HRCA) is used, change the **Pr.12** setting as shown below.

Inverter	Pr.12 setting
FR-A820-00250(3.7K) or lower FR-A840-00126(3.7K) or lower	4%
FR-A820-00340(5.5K), FR-A820-00490(7.5K) FR-A840-00170(5.5K), FR-A840-00250(7.5K)	3%
FR-A820-00630(11K) to FR-A820-01250(22K), FR-A820-01870(37K) or higher FR-A840-00310(11K) to FR-A840-00620(22K), FR-A840-00930(37K) or higher	2%
FR-A820-01540(30K) FR-A840-00770(30K)	1.5%

- Even if the setting value of **Pr.12** is made larger, braking torque will be limited so the output current will be within the rated current of the inverter.

上正科技有限公司
購買、維修 此手冊零組件
電話： 037-466333
Email: service@repairtw.com
line id: @zzzz
www.repairtw.com

(4) Braking operation selection at the time of Real sensorless vector control (Pr.850 = "0. 1")

- The braking operation at the time of the Real sensorless vector control can be selected between the DC injection brake (initial value) or the Zero speed control.
  By setting **Pr.850 Brake operation selection** = "1", zero speed control will be performed under the frequency set in **Pr.10 DC injection brake operation frequency**.

REMARKS

- Under Real sensorless vector control, when the X13 signal turns ON while **Pr.11** = "8888", the zero speed control is activated regardless of the **Pr.850** setting.
- When restarting from brake operation at the time of Real sensorless vector control, set **Pr.850** = "1" (zero speed control). In case of setting value "0" (DC injection brake), it may take approximately 2 s from the time the start up command is input until it actually is output.

(5) Magnetic flux decay output shutoff and magnetic flux decay output shutoff signal (X74 signal, Pr.850 = "2")

- The failure of inverter or increased error in motor may occur due to effect of the motor residual magnetic flux at the time when the inverter output is shut off when frequent start and stop (inching operation) is repeated at the time of Real sensorless vector control. If this is the case, set **Pr.850** = "2" (magnetic flux decay output shutoff) or turn ON the magnetic flux decay output shutoff (X74) signal to decay the magnetic flux at a stop, and then shut off the output.
- With **Pr.850** = "2", deceleration starts at turning OFF of the start command, and the magnetic flux decay output shutoff is activated when the estimated speed becomes lower than **Pr.10 DC injection brake operation frequency**.
- With the brake sequence function is set enabled, the magnetic flux decay output shutoff is activated when the frequency becomes lower than 0.5 Hz or the **Pr.13 Starting frequency** setting, whichever smaller, during deceleration.

- Inverter output voltage shutoff timing when **Pr.850** = "2"

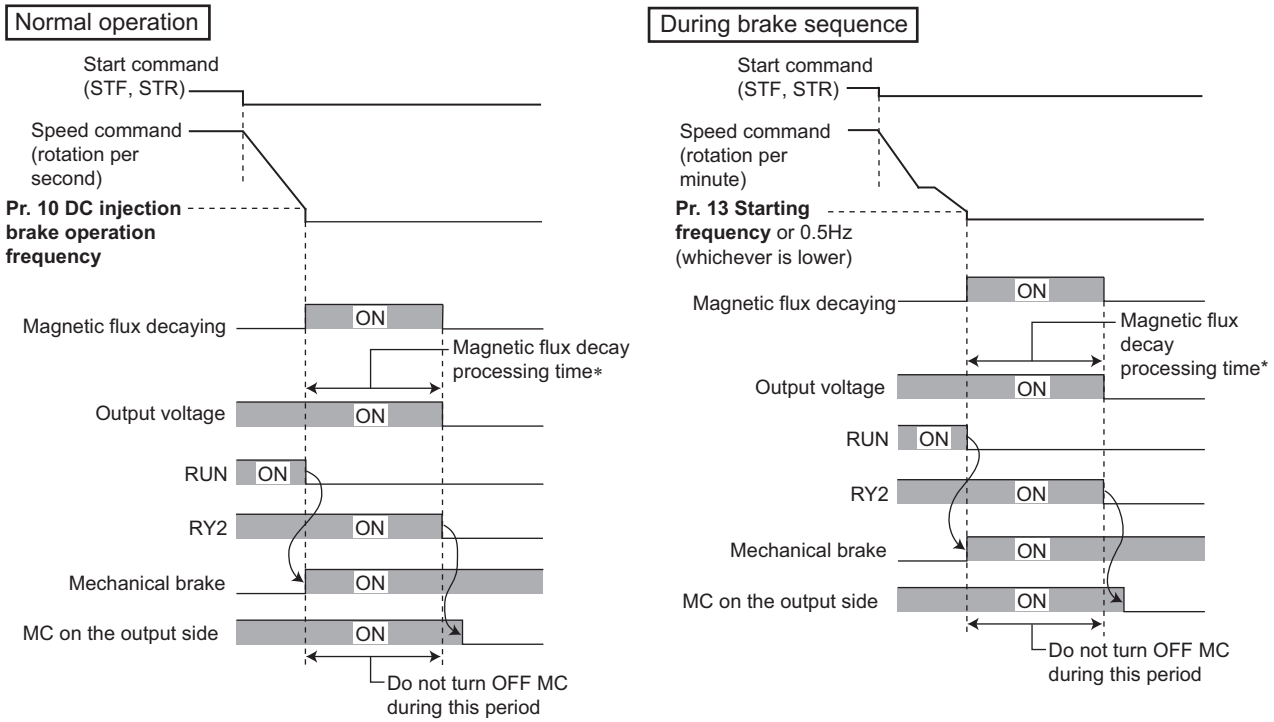

*Maximum time for the magnetic flux decay operation

- Regardless of the **Pr.850** setting, the magnetic flux decay output shutoff will operate immediately when the Magnetic flux decay output shutoff signal (X74) is turned ON. For the X74 signal, set "74" in any of **Pr.178 to Pr.189 (input terminal function selection)** to assign the function.
- Inverter output shutoff timing with X74 signal

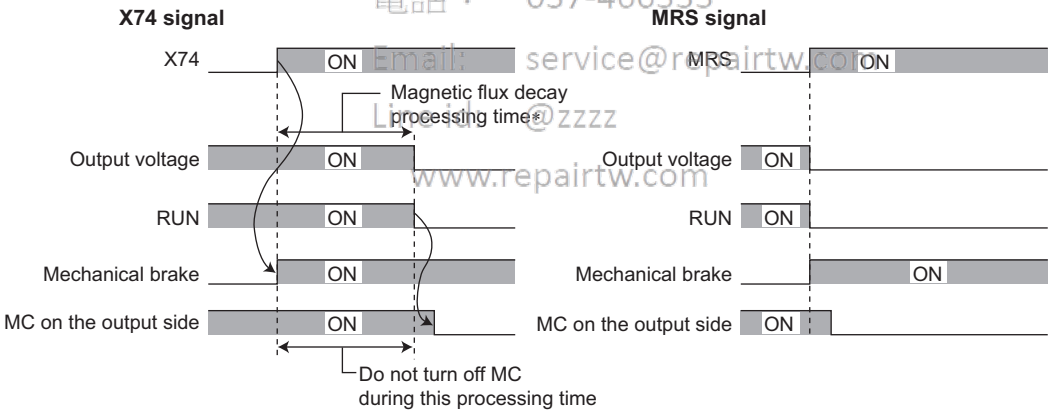

*Maximum time for the magnetic flux decay operation

- Since the torque will decrease at the time of magnetic flux decay output shutoff, set up so the mechanical brake will operate.
- Magnetic flux decay output shutoff will be canceled at the time of restart and when the Pre-excitation/servo ON(LX) signal/External DC injection brake operation start (X13) signal is turned ON.
- When the MC is installed on the inverter output side, set up so the MC is released after the magnetic flux decay operation time (see below) has passed.

Motor capacity (Pr.80 setting value)	2.2 kW or lower	3.7 kW to 11 kW	15 kW to 30 kW	37 kW to 55 kW	75 kW or higher
Magnetic flux decay process time	250 ms	500 ms	800 ms	900 ms	1100 ms

上正科技有限公司
購買、維修 此手冊零組件
電話： 037-466333
Email: service@repairtw.com
Line id: @zzzz
www.repairtw.com

REMARKS

- When operating in anything other than the Real sensorless vector control, the inverter will immediately shutoff the output when the X74 signal is turned ON.
- Even at the time of Real sensorless vector control, the inverter will immediately shutoff the output when the X74 signal is turned ON during the automatic restart after instantaneous power failure and online auto tuning during the start up.
- When other output shutoff trigger (inverter fault, turning ON the MRS signal, etc.) occurs during the magnetic flux decay operation, the magnetic flux operation is terminated, and the output is shut off immediately.
- Unlike the MRS signal, voltage is output during the magnetic flux decay output shutoff operation, so take caution on electric shocks.
- When the release timing of the mechanical brake is too fast, the motor shaft may be rotated by dropping or external force. When the release timing is too late, the overcurrent prevention operation or electronic thermal O/L relay may operate, so perform release of the mechanical brake matching the equipment utilizing the output frequency detection (FU) signal and output current detection (Y12) signal.
- Changing the terminal assignment using **Pr.178 to Pr.189 (input terminal function selection)** may affect the other functions. Set parameters after confirming the function of each terminal.

(6) Braking operation selection for vector control, PM sensorless vector control (Pr.802)

- Select the braking operation when the pre-excitation is performed with **Pr.802 Pre-excitation selection** from either zero speed control or servo lock.

Pr.802 setting	Pre-excitation	Description
0 (initial value)	Zero speed control	It will try to maintain 0 r/min so the motor shaft will not rotate even when a load is applied. However, it will not return to its original position when the shaft moves due to external force. It will not perform position control, but operate only with the speed control.
1	Servo lock	It will try to maintain the position of the motor shaft even if a load is applied. When the shaft moves due to external force, it will return to its original position after the external force is removed. To perform the position control, this loop gain can be adjusted with **Pr.422 Position control gain**.

- The relation between the DC injection brake operation and pre-excitation operation is as follows.

上正科技有限公司
購買、維修 此手冊零組件
電話： 037-466333
Email: service@repairtw.com
Line id: @zzzz
www.repairtw.com

Control method	Control mode	Pr.802	Pr.850	Deceleration stop	LX-ON	X13-ON (Pr.11 = "8888")
V/F control	—	—	—	DC injection brake	—	DC injection brake
Advanced magnetic flux vector control	—	—	—	DC injection brake	—	DC injection brake
Real sensorless vector control	Speed	—	0	DC injection brake	Zero speed	Zero speed
		—	1	Zero speed		
		—	2	Magnetic flux decay output shutoff	Zero speed	Zero speed
	Torque	—	0	DC injection brake	Zero speed	Zero speed
		—	1	Zero speed		
		—	2	Magnetic flux decay output shutoff	Zero speed	Zero speed
Vector control	Speed	0	—	Zero speed	Zero speed	Zero speed
		1	—	Servo lock	Servo lock	Servo lock
	Torque	—	—	Zero speed	Zero speed	Zero speed
	Position	—	—	—	Servo lock	—
PM sensorless vector control, low-speed range high-torque mode disabled	Speed	—	—	DC injection brake	—	—
PM sensorless vector control, low-speed range high-torque mode enabled	Speed	0	—	Zero speed	Zero speed	—
		1	—	Servo lock	Servo lock	—
	Position	—	—	—	Servo lock	—

(7) Pre-excitation signal (LX signal)

- When the Pre-excitation/servo ON (LX) signal is turned ON at the time of Real sensorless vector control, vector control, or PM sensorless vector control, pre-excitation (zero speed control, servo lock) will be ON while stopped.
- To input the LX signal, set "23" in any of **Pr.178 to Pr.189 (input terminal function selection)** to assign the function.

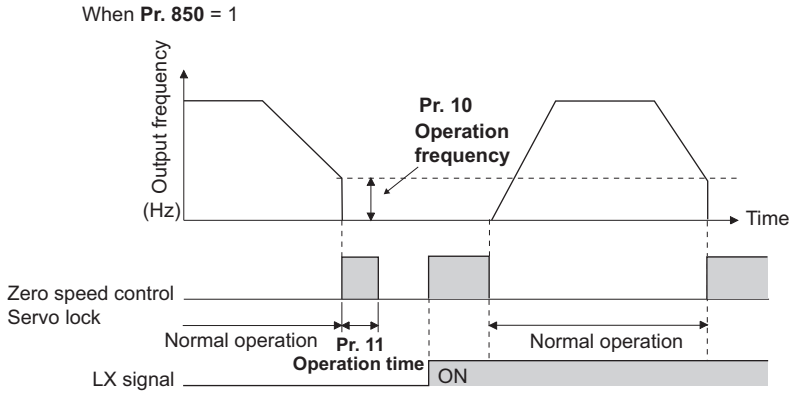

REMARKS

- Changing the terminal assignment using **Pr.178 to Pr.189 (input terminal function selection)** may affect the other functions. Set parameters after confirming the function of each terminal.
- Performing pre-excitation (LX signal and X13 signal) under torque control (Real sensorless vector control) may start the motor running at a low speed even when the start command (STF or STR) is not input. The motor may run also at a low speed when the speed limit value = 0 with a start command input. It must be confirmed that the motor running will not cause any safety problem before performing pre-excitation.
- At the time of pre-excitation operation, the FWD/REV on the operation panel will not light up, but voltage is applied to the motor, so take caution.
- When offline auto tuning (**Pr.96 Auto tuning setting/status** = "1, 11, 101") is executed at the time of pre-excitation operation, pre-excitation is disabled.

上正科技有限公司
購買、維修 此手冊零組件
電話： 037-466333
Email: service@repairtw.com
Line Id: @zzzz
www.repairtw.com

⚠ Caution

⚠ Do not set Pr.11 to "0, 8888" and Pr.12 to "0" at the time of orientation operation. The motor may not stop properly.

⚠ Install a mechanical brake to make an emergency stop or to stay stopped for a long time.
After the machine comes to a full stop and the motor is fixed by the mechanical brake, turn OFF the LX signal (pre-excitation).

♦ Parameters referred to ♦

Pr.13 Starting frequency ☞page 291, page 292
Pr.71 Applied motor ☞page 424
Pr.80 Motor capacity ☞page 428
Pr.178 to Pr.182 (input terminal function selection) ☞page 416
Pr.422 Position control gain ☞page 245

5.16.7 Output stop function

The motor coasts to a stop (inverter output shutoff) when inverter output frequency falls to **Pr. 522** setting or lower.

Pr.	Name	Initial value	Setting range	Description
522 **G105**	**Output stop frequency**	9999	0 to 590 Hz	Set the frequency to start coasting to a stop (output shutoff).
			9999	No function

- When both of the frequency setting signal and output frequency falls to the frequency set in **Pr. 522** or lower, the inverter stops the output and the motor coasts to a stop.
- At a stop condition, the motor starts running when the frequency setting signal exceeds **Pr.522** + 2 Hz. The motor is accelerated at the **Pr.13 Starting frequency** (0.01 Hz under PM sensorless vector control) at the start.

Example of when target frequency>**Pr.522**+2Hz, and start signal is ON/OFF

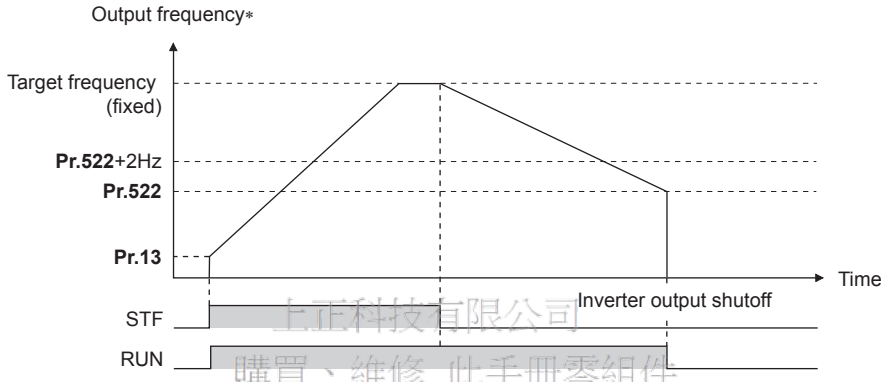

* The output frequency before the slip compensation is compared with the **Pr.522** setting.

上正科技有限公司
購買、維修 此手冊零組件
電話： 037-466333
Email: service@repairtw.com
www.repairtw.com

REMARKS

When the output stop function is valid (**Pr.522** ≠ "9999"), the DC injunction brake becomes invalid and the motor coasts to stop when the output frequency drops to the **Pr.522** setting or lower.

Example of: target frequency = analog input command, start signal always ON

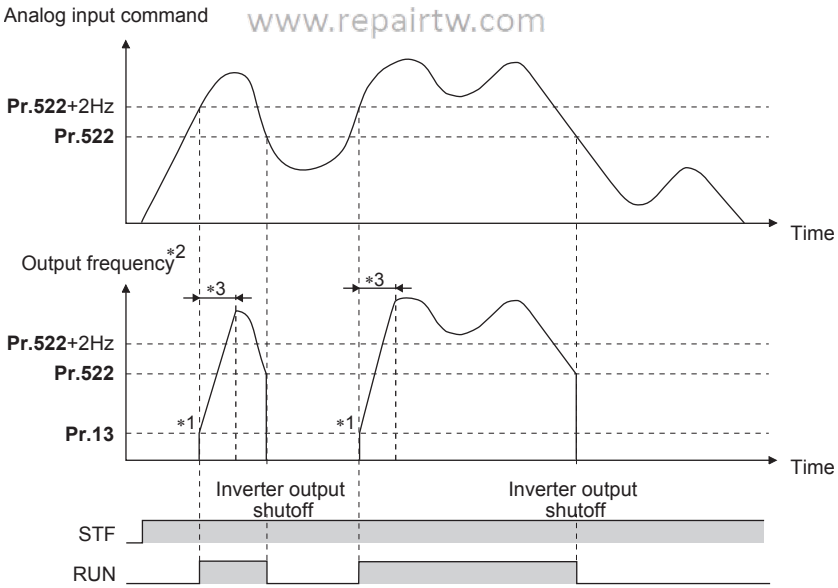

*1 At a stop condition, the motor is accelerated at the **Pr.13 Starting frequency** (0.01 Hz under PM sensorless vector control).

*2 The output frequency to be compared with the **Pr.522** setting is the one before slip compensation (V/F control and Advanced magnetic flux vector control), or the speed command value converted into the frequency (Real sensorless vector control, vector control, and PM sensorless vector control).

*3 Steepness of the slope depends on the acceleration/deceleration time settings such as **Pr.7**.

REMARKS

- Motor coasts when the command value drops to **Pr.522** or lower while the start signal is ON. If the command value exceeds **Pr.522**+2 Hz again while coasting, the motor starts running at **Pr.13 Starting frequency** (0.01 Hz under PM sensorless vector control). When the motor re-accelerates after coasting, the inverter may trip in some parameter settings. (Activation of the restart function is recommended especially for an PM motor.)
- The output stop frequency function is disabled during PID control, JOG operation, power failure stop, traverse function operation, offline auto tuning, orientation control, position control, torque control, stop-on contact control, or machine analyzer operation.
- Output stop function does not operate during reverse rotation deceleration. However, when the frequency setting signal and output frequency falls to **Pr.522** or lower, the inverter coasts to a stop.
- During the output stop due to the output stop function (when forward/reverse command is given, but frequency command is not given), FWD/REV LED indication on the operation panel flickers fast.

⚠ Caution

⚠ An PM motor is a motor with interior permanent magnets. High voltage is generated at motor terminals while the motor is running. Do not touch motor terminals and other parts until the motor stops to prevent an electric shock.

♦ Parameters referred to ♦

Pr.10 DC injection brake operation frequency, Pr.11 DC injection brake operation time, Pr.12 DC injection brake operation voltage ☞page 584
Pr.13 Starting frequency ☞page 291, page 292

上正科技有限公司
購買、維修 此手冊零組件
電話： 037-466333
Email: service@repairtw.com
Line id: @zzzz
www.repairtw.com

5.16.8 Stop selection

Select the stopping method (deceleration to stop or casting) at turn-OFF of the start signal.
Use this function to stop a motor with a mechanical brake at turn-OFF of the start signal.
Selection of start signal (STF/STR) operation can also be selected. (For start signal selection, refer to page 422.)

Pr.	Name	Initial value	Setting range	Description	
				Start signal (STF/STR) (Refer to page 422.)	Stop operation
250 G106	Stop selection	9999	0 to 100 s	STF signal: Forward rotation start STR signal: Reverse rotation start	It will coast to stop after set time when the start signal is turned OFF.
			1000 s to 1100 s	STF signal: Start signal STR signal: Forward/reverse rotation signal	It will coast to stop after (**Pr.250** - 1000) s when the start signal is turned OFF.
			9999	STF signal: Forward rotation start STR signal: Reverse rotation start	It will perform deceleration stop when the start signal is turned OFF.
			8888	STF signal: Start signal STR signal: Forward/reverse rotation signal	

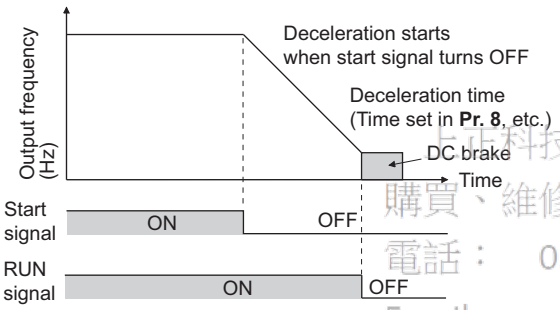

(1) Make the motor perform deceleration stop

- Set **Pr.250** = "9999 (initial value) or 8888".
- It will perform deceleration stop when the start signal (STF/STR) is turned OFF.

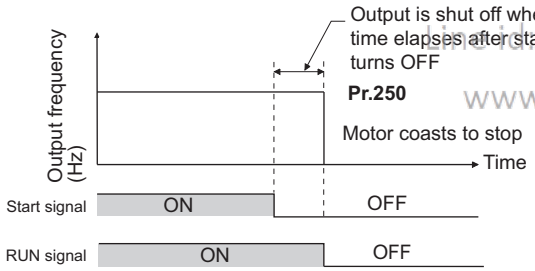

(2) Make the motor perform coast to stop

- Set the time from the time the start signal is turned OFF to when the output is shutoff in **Pr.250**. When set to "1000 to 1100", output is shutoff after (**Pr.250** - 1000) s.
- The output is shutoff after the set time of **Pr.250** has elapsed after the start signal is turned OFF. The motor will coast to stop.
- The RUN signal will be turned OFF at the time of output stop.

上正科技有限公司
購買、維修 此手冊零組件
電話： 037-466333
Email: service@repairtw.com
www.repairtw.com

REMARKS

- Stop selection is disabled when following functions are operating.
  -Position control (**Pr.419** = "0")
  -Power failure stop function (**Pr.261**)
  -PU stop (**Pr.75**)
  -Deceleration stop due to fault initiation (**Pr.875**)
  -Deceleration stop due to communication error (**Pr.502**)
  -Offline auto tuning (with motor rotation)
- When **Pr.250** ≠ "9999 or 8888", acceleration/deceleration is performed in accordance to the frequency command until the output is shutoff by turning OFF the start signal.
- When the restart signal is turned ON during the motor coasting, the operation is resumed from **Pr.13 Starting frequency**.
- Even with the setting of coasting to stop, when the LX signal is turned ON, the motor does not coast but zero speed control or servo lock is applied.

♦ Parameters referred to ♦

Pr.7 Acceleration time, Pr.8 Deceleration time page 278
Pr.13 Starting frequency page 291, page 292
Pr.75 Reset selection/disconnected PU detection/PU stop selection page 252
Pr.261 Power failure stop selection page 523
Pr.502 Stop mode selection at communication error page 541
Pr.875 Fault definition page 328

5.16.9 Regenerative brake selection and DC feeding mode

- When performing frequent start and stop operation, usage rate of the regenerative brake can be increased by using the optional high-duty brake resistor (FR-ABR) or the brake unit (FR-BU2, BU, FR-BU).
- When using continuously in regenerative condition, use the power regeneration common converter (FR-CV) or power regeneration converter (MT-RC). The high power factor converter (FR-HC2) can be used also to reduce harmonics, improve power factor, and operate continuously in the regenerative status.
- It is possible to choose between the DC feeding mode 1, which will operate with DC power supply (terminals P and N), and DC feeding mode 2, which will normally operate in AC power supply (terminals R, S, and T) and operate in DC power supply (terminal P and N), such as batteries, at the time of power failure.
- While the power is supplied only to the control circuit, the reset operation when the power is supplied to the main circuit can be selected.

Pr.	Name	Initial value	Setting range	Description
30 **E300**	**Regenerative function selection**	0	0 to 2, 10, 11, 20, 21, 100 to 102, 110, 111, 120, 121*1 0, 2, 10, 20, 100, 102, 110, 120*2	First digit: Regeneration unit selection ("0" for built-in brake, "1" for high-duty brake resistor, "2" for FR-HC2 or FR-CV) Second digit: Selection of the power supply terminal to the inverter ("0" for AC, "1" for DC, "2" for AC and DC) Third digit: Reset when the power is supplied to the main circuit ("0" for reset, "1" for no reset) For details, refer to the table below.
70 **G107***3	**Special regenerative brake duty**	0%	0 to 100%	Set the %ED of the built-in brake transistor operation.
599 **T721**	**X10 terminal input selection**	0	0	Normally open input
			1	Normally closed input (NC contact input specification)

*1 Setting range for the standard structure model

*2 Setting range for the IP55 compatible model

*3 Available only with the standard structure model

上正科技有限公司
購買、維修 此手冊零組件
電話： 037-466333
Email: service@repairtw.com
Line Id: @zzz
www.repairtw.com

(1) Details of the setting value

- FR-A820-03160(55K) or lower, FR-A840-01800(55K) or lower

Regeneration unit	Power supply terminals of inverter	Pr.30 Setting*4	Pr.70 Setting	Remarks
Built-in brake *3, Brake unit (FR-BU2 (GZG/GRZG/ FR-BR), FR-BU, BU)	R, S, T	0 (initial value), 100	—	The regenerative brake duty will be as follows. • FR-A820-00046(0.4K) to FR-A820-00250(3.7K): 3% • FR-A820-00340(5.5K), FR-A820-00490(7.5K): 2% • FR-A840-00023(0.4K) to FR-A840-00250(7.5K): 2% • Other than above: 0% (without the built-in brake resistor)
	P, N	10, 110		
	R, S, T/P, N	20, 120		
high-duty brake resistor (FR-ABR)	R, S, T	1, 101	10%*1 6%*2	FR-ABR can be used with FR-A820-01250(22K) or lower and FR-A840-00620(22K) or lower.
	P, N	11, 111		
	R, S, T/P, N	21, 121		
High power factor converter (FR-HC2), Power regeneration common converter (FR-CV)	P, N	2, 102	0% (initial value)	—

- FR-A820-03800(75K) or higher, FR-A840-02160(75K) or higher

Regeneration unit	Power supply terminals of inverter	Pr.30 Setting*4	Pr.70 Setting
Without regenerative function	R, S, T	0 (initial value), 100	—
	P, N	10, 110	
	R, S, T/P, N	20, 120	
Brake unit (FR-BU2 (MT-BR5))	R, S, T	1, 101	0% (initial value)
	P, N	11, 111	
	R, S, T/P, N	21, 121	
Power regeneration converter (MT-RC)	R, S, T	1, 101	0% (initial value)
High power factor converter (FR-HC2)	P, N	2, 102	—

*1 For the FR-A820-03160(55K) or lower and FR-A840-01800(55K) or lower.

*2 For the FR-A820-03800(75K) or higher, andFR-A840-02160(75K) or higher.

*3 Built-in brake is installed on FR-A820-00490(7.5K) or lower, FR-A840-00250(7.5K) or lower.

*4 While the power is supplied only to the control circuit with **Pr.30** = "100 or higher", the inverter reset is not performed when the power is supplied to the main circuit.

REMARKS

- For the use of a brake resistor other than FR-ABR, contact your sales representative.

(2) When using built-in brake resistor, brake unit (FR-BU2, BU, FR-BU) (FR-A820-03160(55K) or lower, FR-A840-01800(55K) or lower)

- When using the built-in brake, using FR-BU2 in combination with GZG/GRZG/FR-BR, or using BU or FR-BU, set **Pr.30** = "0 (initial value), 10, 20, 100, 110, 120". Setting of **Pr.70** will become disabled.
  At this time, the regenerative brake duty is as follows. (The built-in brake resistor is equipped for the 7.5K or lower.)
  - FR-A820-00250(3.7K) or lower 3%
  - FR-A820-00340(5.5K), FR-A820-00490(7.5K)..... 2%
  - FR-A840-00250(7.5K) or lower 2%
  - Other than above..... 0% (without built-in brake resistor)

(3) When using high-duty brake resistor (FR-ABR) (FR-A820-01250(22K) or lower, FR-A840-00620(22K) or lower)

- Set **Pr.30** = "1, 11, 21".
- Set **Pr.70** as follows.
  FR-A820-00490(7.5K) or lower, FR-A840-00250(7.5K) or lower..... 10%
  FR-A820-00630(11K) or higher, FR-A840-00310(11K) or higher 6%

(4) When using brake unit (FR-BU2) (FR-A820-03800(75K) or higher, FR-A840-02160(75K) or higher)

To use FR-BU2 in combination with MT-BR5, set as follows.

- Set **Pr.30** = "1, 11, 21".
- Set **Pr.70** = "0% (initial value)".
- Set the brake unit FR-BU2, **Pr.0 Brake mode selection** = "2".

上正科技有限公司
購買、維修 此手冊零組件
電話： 037-466333
Email: [illegible]@repairtw.com
Line id: @zzzz
www.repairtw.com

REMARKS

- When **Pr.30** = "1, 11, 21", oL (stall prevention (overvoltage)) does not operate.

(5) When using power regeneration converter (MT-RC)

- Set **Pr.30** = "1, 11, 21".
- Set **Pr.70** = "0%".

(6) When using high power factor converter (FR-HC2) or power regeneration common converter (FR-CV)

- Set **Pr.30** = "2". Setting of **Pr.70** will become disabled.
- Assign the following signal to a contact input terminal using any of **Pr.178 to Pr.189 (input terminal function selection)**.
  (a)Inverter run enable signal (X10): FR-HC2 connection, FR-CV connection (inverter run enable signal)
  To have coordinated protection with FR-HC2 and FR-CV, shutoff the inverter output by the X10 signal.
  Input the RDY signal of the FR-HC2 (RDYB signal of FR-CV).
  (b)FR-HC2 connection, instantaneous power failure detection signal (X11): FR-HC2 connection (instantaneous power failure detection hold)
  During the operation using RS-485 communication, with the remote output and analog remote output functions enabled, the X11 signal is used to store the status when the inverter is set to store the status before an instantaneous power failure.
  Input the IPF signal (instantaneous power failure detection signal) of the FR-HC2.
- For the terminal to be used for the X10 and X11 signal, set "10" (X10), "11" (X11) in **Pr.178 to Pr.189** and assign the function.

REMARKS

- For details of high-duty brake resistor (FR-ABR), brake unit, high power factor converter (FR-HC2), power regeneration common converter (FR-CV) connections, refer to page 71 to 77. Also, for details of each option, refer to instruction manual of each option.
- When changed to **Pr.30** = "2", inverter will reset, so "Err" is displayed on the operation panel.

(7) Logic reversing of inverter run enable signal (X10 signal, Pr.599)

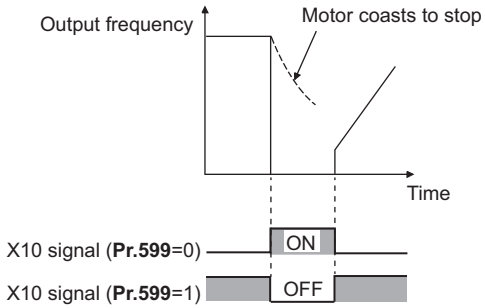

- When set to **Pr.599 X10 terminal input selection** = "1", X10 signal can be changed to normally closed (NC contact) input specification. Inverter will shutoff the output by turning OFF (opening) the X10 signal. (In the initial setting, output of the inverter is shutoff when the X10 signal is turned ON.)
- It is corresponding to RDY signal output switch (NO contact, NC contact) for FR-HC2 or RDYA signal for FR-CV.
- The response time of the M10 signal is within 2 ms.

REMARKS

- If the X10 signal is unassigned while **Pr.30** = "2" (FR-HC2/FR-CV connection) or "10 or 11" (DC feeding mode 1), the MRS signal can be used as the X10 signal. At this time, logic setting for the signal will follow **Pr.17 MRS input selection**.
- MRS signal is enabled from any of the communication or external input, but when using the MRS signal as Inverter run enable signal (X10), it can be used as input from external.
- When FR-HC or MT-HC is connected, set **Pr.599** = "0 (initial value)".
- When the terminal assignment is changed with **Pr.178 to Pr.189 (input terminal function selection)**, wiring may be mistaken due to different terminal name and signal contents, or may affect other functions. Set parameters after confirming the function of each terminal.

(8) Regenerative brake usage rate alarm output and alarm signal (RBP signal)

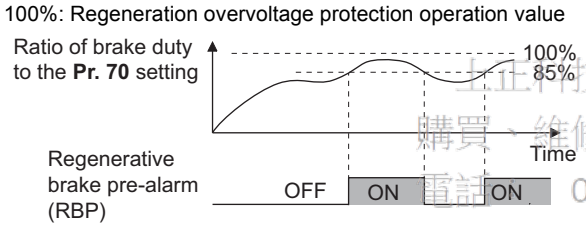

- When the usage rate of regenerative brake reaches 85% of the **Pr.70** setting, [RB] is displayed on the operation panel and alarm signal (RBP) is output. When it reaches 100% of the **Pr.70** setting, it will become regenerative overvoltage (E.OV[]).
- The inverter will not shutoff output with the alarm signal.
- For the terminal to be used for the RBP signal output, set "7 (positive logic) or 107 (negative logic)"to one of **Pr.190 to Pr.196 (output terminal function selection)**, and assign the function.

三正科技有限公司
購買、維修 此手冊零組件
電話: 037-466333
Email: service@repairtw.com
Line id: @zzzz

REMARKS

- When **Pr.30** = "0 (initial value), 10 or 20" for FR-A820-00630(11K) or higher and FR-A840-00310(11K) or higher, the RB display and the RBP signal are disabled.
- When the terminal assignment is changed with **Pr.190 to Pr.196 (output terminal function selection)**, wiring may be mistaken due to different terminal name and signal contents, or may affect other functions. Set parameters after confirming the function of each terminal.

(9) Reset when the power is supplied to the main circuit (Pr.30 = "100, 101, 102, 110, 111, 120 or 121")

- While the power is supplied only to the control circuit (R1/L11, S1/L12 input or 24 V external power supply) with **Pr.30** = "100 or higher", the inverter reset is not performed when the power is supplied (R/L1, S/L2, T/L3 input) to the main circuit.
- When a communication option, etc. is used, communication interruption due to the inverter reset can be avoided.

REMARKS

- When the power is supplied to the main circuit while the inverter protective function is activated, the inverter reset is performed even if it the setting is "No reset" at power ON.

(G) Control parameters

(10) DC feeding mode 1 (Pr.30 = "10, 11")

- Setting to **Pr.30** = "10, 11" allows operation by DC current.
- Do not connect anything to the AC power supply connecting terminals R/L1, S/L2, and T/L3, and connect the DC power supply to the terminals P/+ and N/-. Also, remove the jumpers between terminal R/L1 and R/L11as well as between S/L2 and S1/L21, and connect the terminals R1/L11 and S1/L21 to the terminals P/+ and N/-.
- Following is a connection example.

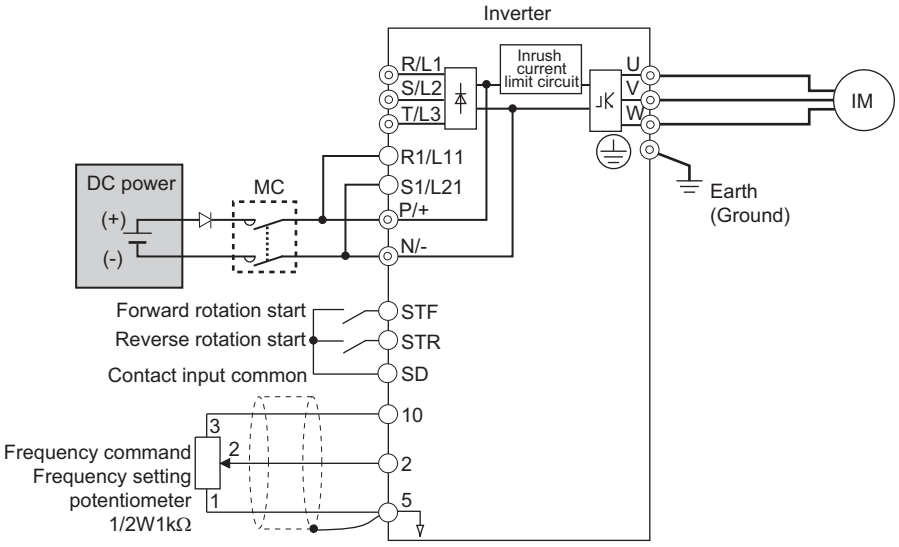

(11) DC feeding mode 2 (Pr.30 = "20, 21")

- When **Pr.30** = "20, 21", it will normally operate with AC power supply and operate with DC power supply such as batteries at the time of power failure.
- Connect the AC power supply to the AC power supply connecting terminals R/L1, S/L2, and T/L3, and connect the DC power supply to the terminals P/+ and N/-. Also, remove the jumpers between terminal R/L1 and R/L11as well as between S/L2 and S1/L21, and connect the terminals R1/L11 and S1/L21 to the terminals P/+ and N/-.
- Operation with DC current is possible by turning ON the DC feeding operation permission signal (X70). For details on I/O signal, refer to following table.

卫正科技有限公司
購買、維修 此手冊零組件
電話： 037-466933
Email: service@repairtw.com
Line id: @zzzz
www.repairtw.com

Signal name		Name	Description	Parameter setting
Input	X70	DC feeding operation permission signal	To operate with DC feeding, turn ON the X70 signal. When the inverter output is shutoff due to power failure, it will be possible to start up 200 ms after turning ON the X70 signal. (Automatic restart after instantaneous power failure can start after the time set in **Pr.57** has elapsed.) When the X70 signal is turned OFF while operating the inverter, output shutoff (**Pr.261** = 0) or deceleration stop (**Pr.261** ≠ 0) will occur.	Set "70" to either of **Pr.178 to Pr.189**.
	X71	DC feeding cancel signal	Turn ON when stopping the DC feeding. When the X71 signal is turned ON during the operation of the inverter and X70 signal is ON, output shutoff (**Pr.261** = 0) or deceleration stop (**Pr.261** ≠ 0) will occur, and Y85 signal will turn OFF after stopping. After turning ON the X71 signal, operation is not possible even if the X70 signal is turned ON.	Set "71" to either of **Pr.178 to Pr.189**.
Output	Y85	DC feeding signal	This will turn ON during power failure or undervoltage of the AC power supply. It will turn OFF when the X71 signal turns ON or power restoration. The Y85 signal will not turn OFF even with the power restoration while the inverter is running, but turns OFF after stopping the inverter. When the Y85 signal is turned ON due to undervoltage, the Y85 signal will not turn OFF even when the undervoltage is resolved. The ON/OFF status is maintained when the inverter is reset.	Set "85 (positive logic) or 185 (negative logic)" to one of **Pr.190 to Pr.196**.

- Following is the connection diagram of switching to DC power supply using the power failure detection of the inverter.

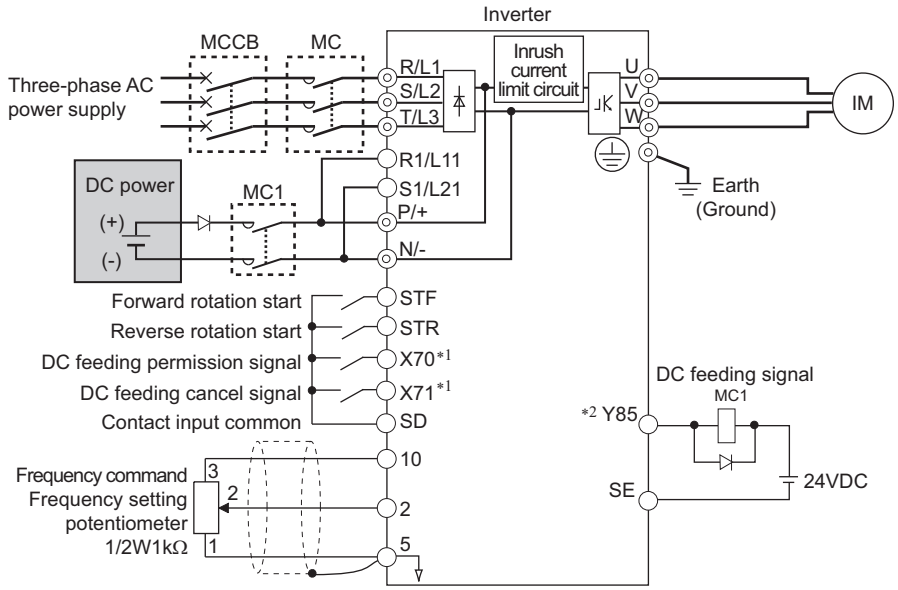

*1 Assign the function by setting **Pr.178 to Pr.189 (input terminal function selection)**.

*2 Assign the function by setting **Pr.190 to Pr.196 (output terminal function selection)**.

- Operation example at the time of power failure occurrence 1

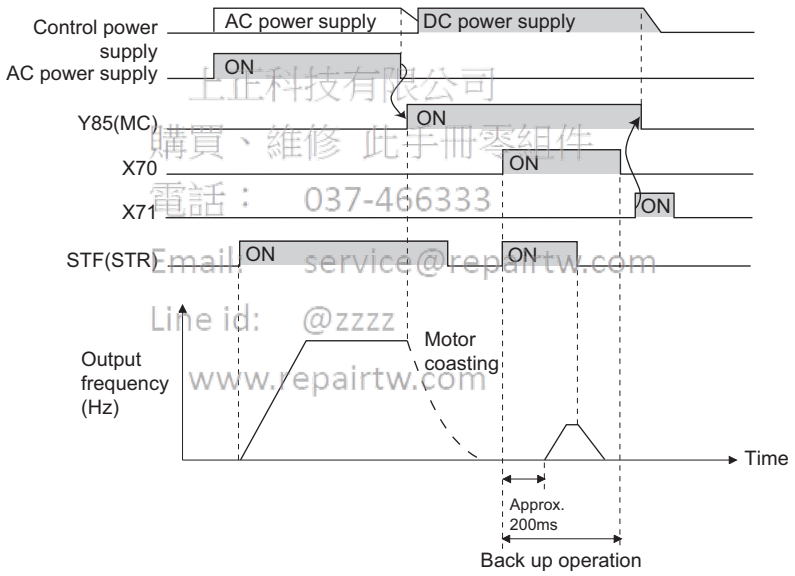

上正科技有限公司
購買、維修 此手冊零組件
電話： 037-466333
Email: service@repairtw.com
Line id: @zzzz
www.repairtw.com

- Operation example at the time of power failure occurrence 2 (when the AC power supply is restored)

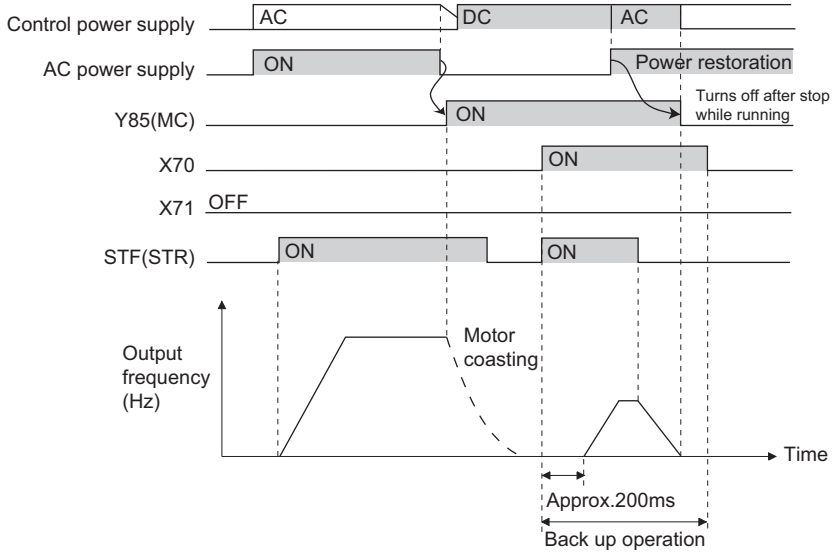

- Operation example at the time of power failure occurrence 3 (when continuing the operation)

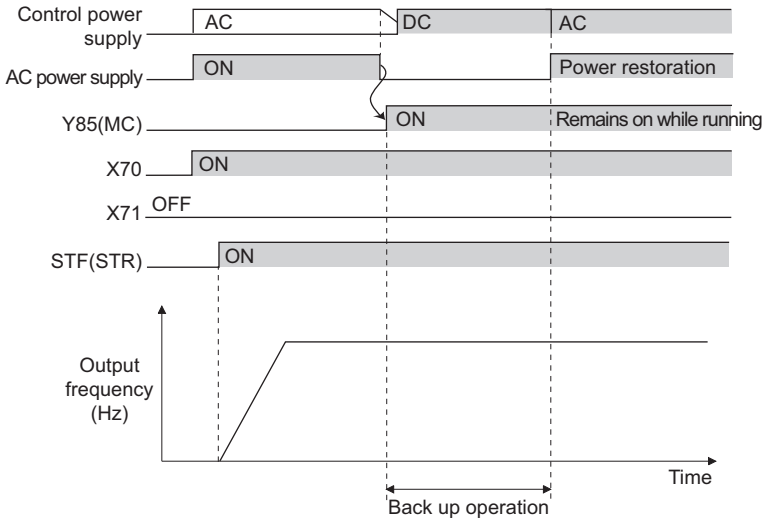

(12) Power supply specification for DC feeding

200 V class	Rated input DC voltage	283 V DC to 339 V DC
	Permissible fluctuation	240 V DC to 373 V DC
400 V class	Rated input DC voltage	537 V DC to 679 V DC
	Permissible fluctuation	457 V DC to 740 V DC

REMARKS

- The voltage between P and N will temporarily increase to 415 V (830 V) or higher during the regenerative driving, so take caution on the selection of the DC power supply.
- When an AC power supply is connected to the R/L1, S/L2, and T/L3 terminals during the DC feeding with **Pr.30** = "2, 10, 11" (DC feeding), an option fault (E.OPT) will occur.
- When set to **Pr.30** = "2, 10, 11, 20, 21" (DC feeding) and operated by DC feeding, detection of undervoltage (E.UVT) and instantaneous power failure (E.IPF) is not performed.
- When DC power is switched on, a larger inrush current flows than in AC power. The number of power-on times should be minimized.
- Changing the terminal assignment using **Pr.178 to Pr.189 (input terminal function selection)** or **Pr.190 to Pr.196 (output terminal function selection)** may affect the other functions. Set parameters after confirming the function of each terminal.

上正科技有限公司
購買、維修 此手冊零組件
電話： 037-466333
Email: service@repairtw.com
Line Id: @2222
www.repairtw.com

⚠ WARNING

⚠ The value set in Pr. 70 must not exceed the setting of the brake resistor used. It may cause overheating.

♦ Parameters referred to ♦

Pr.17 MRS input selection ☞ page 419
Pr.57 Restart coasting time ☞ page 511, page 517
Pr.178 to Pr.189 (input terminal function selection) ☞ page 416
Pr.190 to Pr.196 (output terminal function selection) ☞ page 370
Pr.261 Power failure stop selection ☞ page 523

5.16.10 Regeneration avoidance function

The regenerative status can be avoided by detecting the regenerative status and raising the frequency.

- Continuous operation is possible by increasing the frequency automatically so it will not go into regenerative operation even when the fan is turned forcefully by other fans in the same duct.

Pr.	Name	Initial value		Setting range	Description
882 G120	**Regeneration avoidance operation selection**	0		0	Disables regeneration avoidance function
				1	Constantly enables regeneration avoidance function
				2	Enables regeneration avoidance function only during constant-speed operation
883 G121	**Regeneration avoidance operation level**	200 V Class	380 VDC	300 to 800 V	Set the bus voltage level to operate the regeneration avoidance operation. When the bus voltage level is set low, it will be harder to generate overvoltage error, but actual deceleration time will be longer. Set the setting value higher than power supply voltage × $\sqrt{2}$.
		400 V Class	760 VDC		
884 G122	**Regeneration avoidance at deceleration detection sensitivity**	0		0	Disables regeneration avoidance due to bus voltage change rate
				1 to 5	Set the sensitivity to detect the bus voltage change rate Setting value 1 → 5 Detection sensitivity Low → High
885 G123	**Regeneration avoidance compensation frequency limit value**	6 Hz		0 to 590 Hz	Set the limit value for frequency to rise when the regeneration avoidance function operates.
				9999	Disables frequency limit
886 G124	**Regeneration avoidance voltage gain**	100%		0 to 200%	Adjust the response at the time of regeneration avoidance operation. When the setting value is set larger, response against the bus voltage change will improve, but the output frequency may become unstable. When the vibration cannot be stabilized even if the setting value of **Pr.886** is made smaller, set the setting value of **Pr.665** smaller.
665 G125	**Regeneration avoidance frequency gain**	100%		0 to 200%	

上正科技有限公司
購買、維修 此手冊零組件
電話：037-466333
Email: service@repairtw.com
Line id: @zzzz
www.repairtw.com

(1) What is regeneration avoidance operation? (Pr.882, Pr.883)

- When the regenerative status is large, DC bus voltage will rise, which may cause overvoltage alarm (E.OV[]). Regenerative status can be avoided by detecting this rise of bus voltage, and raising the frequency when the bus voltage level exceeds **Pr.883 Regeneration avoidance operation level**.
- The regeneration avoidance operation can be selected to operate constantly or operate only during constant speed.
- The regeneration avoidance function is enabled by setting to **Pr.882 Regeneration avoidance operation selection** = "1, 2".

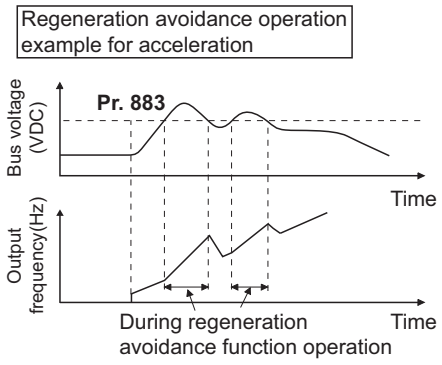

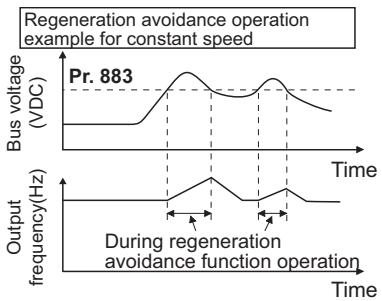

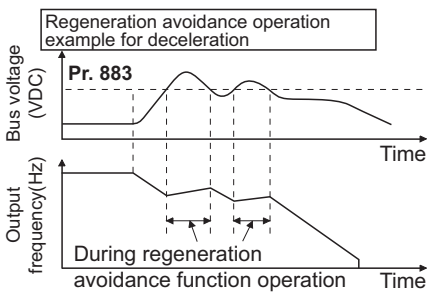

REMARKS

- The slope of frequency rising or lowering by the regeneration avoidance operation will change depending on the regenerative status.
- The DC bus voltage of the inverter will be approximately $\sqrt{2}$ times of the normal input voltage. The bus voltage will be approximately 311 V (622 V) DC in case of input voltage of 220 V (440 V) AC. However, it may vary depending on the input power supply waveform.
- Make sure that the setting value of **Pr.883** will not get under DC bus voltage level. The frequency will rise with operation of the regeneration avoidance function even at the time of no regenerative status.
- The stall prevention (overvoltage) (**oL**) will only operate during deceleration, stopping the lowering of output frequency, but on the other hand, the regeneration avoidance function will constantly operate (**Pr.882** = "1") or operate only at constant speed (**Pr.882** = "2"), and raise the frequency depending on the amount of regeneration.
- When the motor becomes unstable due to operation of the stall prevention (overcurrent) (OL) during the regeneration avoidance operation, increase the deceleration time or lower the setting of **Pr.883**.
- Under position control, the regeneration avoidance function is not activated.

(2) To detect the regenerative status during deceleration faster (Pr.884)

- Since a rapid change in bus voltage cannot be handled by bus voltage level detection during the regeneration avoidance operation, deceleration is stopped by detecting the change in bus voltage and if it is equal or lower than **Pr.883 Regeneration avoidance operation level**.
  Set the detectable bus voltage change rate as the detection sensitivity in **Pr.884 Regeneration avoidance at deceleration detection sensitivity** . A larger set value increases the detection sensitivity.

REMARKS

- When the setting value is too small (detection sensitivity is not good), detection will not be possible, and regeneration avoidance will operate even with the bus voltage change caused by a change in the input power.

(3) Limit regeneration avoidance operation frequency (Pr.885)

正正科技有限公司
購買、維修 此主機零組件
電話： 037-466333
Email: service@repairtw.com
Line id: @zzzz
www.repairtw.com

- It is possible to assign a limit to the output frequency corrected (rise) by the regeneration avoidance operation.
- Limit of the frequency is output frequency (frequency before regeneration avoidance operation) + **Pr.885 Regeneration avoidance compensation frequency limit value** for during acceleration and constant speed.
  During deceleration, when the frequency increases due to the regeneration avoidance operation and exceeds the limit value, the limit value will be retained until the output frequency is reduced to be the half the **Pr.885** setting.
- When the frequency that have increased by the regeneration avoidance operation exceeds **Pr.1 Maximum frequency**, it will be limited to the maximum frequency.
- By setting to **Pr.885** = "9999", regeneration avoidance operation frequency limitation is disabled.
- Set using the motor rated slip frequency as a guideline. Raise the setting value if the overvoltage protection function (E.OV[]) operation at the start of deceleration.

$$\text{Rated motor slip frequency} = \frac{\text{Synchronized speed at the time of base frequency} - \text{rated rotation speed}}{\text{Synchronized speed at the time of base frequency}} \times \text{Rated motor frequency}$$

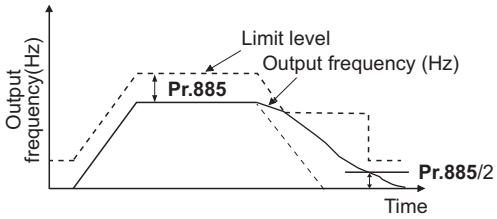

(4) Adjustment of regeneration avoidance operation (Pr.665, Pr.886)

- When the frequency becomes unstable at the time of regeneration avoidance operation, set the setting value for **Pr.886 Regeneration avoidance voltage gain** smaller. On the other hand, if an overvoltage fault occurs due to a sudden regeneration, increase the setting.
- When the vibration cannot be stabilized even if the setting value of **Pr.886** is made smaller, set the setting value of **Pr.665 Regeneration avoidance frequency gain** smaller.

REMARKS

- During the regeneration avoidance operation, the stall prevention (overvoltage) (oL) is displayed and the overload alarm (OL) signal is output. The operation when the OL signal is output can be set with **Pr.156 Stall prevention operation selection**. The OL signal output timing can be set with **Pr.157 OL signal output timer**.
- The stall prevention is enabled even at the time of regeneration avoidance operation.
- The regeneration avoidance function cannot decrease the actual deceleration time for the motor to stop. The actual deceleration time is determined by the regenerative power consumption performance, so to decrease the deceleration time, consider using a regeneration unit (FR-BU2, BU, FR-BU, FR-CV, FR-HC2) or brake resistor (FR-ABR, etc.).
- When using regeneration unit (FR-BU2, BU, FR-BU, FR-CV, FR-HC2) or brake resistor (FR-ABR, etc.) to consume the regenerative power, set to **Pr.882** = "0 (initial value)" (disables regeneration avoidance function). When consuming the regenerative power at the time of deceleration with the regeneration unit, etc., set to **Pr.882** = "2" (enables regeneration avoidance function only at the time of constant speed).
- When using the vector control and the regeneration avoidance function together, there may be a sound from the motor at the time of deceleration. In such case, adjust the gain by performing easy gain tuning, etc. (Refer to page 188.)

♦ Parameters referred to ♦

Pr.1 Maximum frequency page 334
Pr.8 Deceleration time page 278
Pr.22 Stall prevention operation level page 336

5.16.11 Increased magnetic excitation deceleration

V/F Magnetic flux Sensorless Vector

Increase the loss in the motor by increasing the magnetic flux at the time of deceleration. Deceleration time can be reduced by suppressing the stall prevention (overvoltage) (oL).
It will make possible to reduce the deceleration time without a brake resistor. (Usage can be reduced if a brake resistor is used)

上正科技有限公司
購買、維修 此手冊零組件
電話： 037-466333
Email: service@repairtw.com
Line id: @zzzz
www.repairtw.com

Pr.	Name	Initial value	Setting range	Description
660 G130	Increased magnetic excitation deceleration operation selection	0	0	Without increased magnetic excitation deceleration
			1	With increased magnetic excitation deceleration
661 G131	Magnetic excitation increase rate	9999	0 to 40%	Set the increase of excitation.
			9999	Magnetic excitation increase rate 10% under V/F control and Advanced magnetic flux vector control
				Magnetic excitation increase rate 0% under Real sensorless vector control and vector control
662 G132	Increased magnetic excitation current level	100%	0 to 300%	The increased magnetic excitation rate is automatically lowered when the output current exceeds the setting value at the time of increased magnetic excitation deceleration.

(1) Setting of increased magnetic excitation rate (Pr.660, Pr.661)

- To enable the increased magnetic excitation deceleration, set **Pr.660 Increased magnetic excitation deceleration operation selection** = "1".
- Set the amount of excitation increase in **Pr.661 Magnetic excitation increase rate**. Increased magnetic excitation deceleration will be disabled when **Pr.661** = "0".
- When the DC bus voltage exceeds the increased magnetic excitation deceleration operation level during the deceleration, excitation is increased in accordance with the setting value in **Pr.661**.
- The increased magnetic excitation deceleration will continue even if the DC bus voltage goes under the increased magnetic excitation deceleration operation level during increased magnetic excitation deceleration.

Inverter	Increased magnetic excitation deceleration operation level
200 V class	340 V
400 V class	680 V
With 500 V input	740 V

- When the stall prevention (overvoltage) occurs during the increased magnetic excitation deceleration operation, increase the deceleration time or raise the setting value of **Pr.661**. When the stall prevention (overcurrent) occurs, increase the deceleration time or lower the setting value of **Pr.661**.
- Increased magnetic excitation deceleration is enabled with V/F control, Advanced magnetic flux vector control, Real sensorless vector control (speed control), and vector control (speed control).

REMARKS

- The increased magnetic excitation deceleration will be disabled in the following conditions:
  During PM sensorless vector control, power failure stop, orientation control, operation with FR-HC2/FR-CV, energy saving operation, Optimum excitation control, and stop-on-contact control.

(2) Overcurrent prevention function (Pr.662)

- The overcurrent prevention function is valid under V/F control and Advanced magnetic flux vector control.
- Increased magnetic excitation rate is lowered automatically when the output current exceeds **Pr.662** at the time of increased magnetic excitation deceleration.
- When the inverter protective function (E.OC_, E.THT) operates due to increased magnetic excitation deceleration, adjust with **Pr.662**.
- Overcurrent preventive function will be disabled when **Pr.662**= "0".

REMARKS

- When set to **Pr.662** > **Pr.22 Stall prevention operation level**, overcurrent preventive function will operate at the setting value of **Pr.22**. (Operates at **Pr.622** when **Pr.22** = "0")

♦ Parameters referred to ♦

Pr.22 Stall prevention operation level ☞page 336
Pr.30 Regenerative function selection ☞page 593
Pr.60 Energy saving control selection ☞page 582
Pr.162 Automatic restart after instantaneous power failure selection ☞page 511, page 517
Pr.270 Stop-on contact/load torque high-speed frequency control selection ☞page 462
Pr.261 Power failure stop selection ☞page 523
Pr.350 Stop position command selection ☞page 471

5.16.12 Slip compensation V/F

Slip of the motor is estimated from the inverter output current at the time of V/F control, and maintain the rotation of the motor constant.

上正科技有限公司
購買・維修 此手冊零組件
電話： 037-466333
Email: service@repairtw.com
LineId: @333
www.repairtw.com

Pr.	Name	Initial value	Setting range	Description
245 G203	**Rated slip**	9999	0.01 to 50%	Set the rated motor slip.
			0, 9999	Without slip compensation
246 G204	**Slip compensation time constant**	0.5s	0.01 to 10s	Set the response time of the slip compensation. Response will become faster when the value is lowered, but the regenerative overvoltage (E.OV[]) error will occur more frequently when the load inertia is larger.
247 G205	**Constant-power range slip compensation selection**	9999	0	Do not perform slip compensation at constant output range (frequency range higher than the frequency set in **Pr.3**).
			9999	Perform the slip compensation of the constant output range.

- Slip compensation will become enabled by calculating the rated motor slip, and setting to **Pr.245**.
  Slip compensation is not performed when **Pr.245** = "0, 9999".

$$\text{Rated slip} = \frac{\text{Synchronized speed at the time of base frequency - rated rotation speed}}{\text{Synchronized speed at the time of base frequency}} \times 100[\%]$$

REMARKS

- When the slip compensation is performed, the output frequency may become larger than the set frequency. Set **Pr.1 Maximum frequency** higher than the set frequency.
- Slip compensation will be disabled in following cases.
  At the times of stall preventive (oL, OL) operation, regeneration avoidance operation, auto tuning, encoder feedback control operation

♦ Parameters referred to ♦

Pr.1 Maximum frequency ☞page 334
Pr.3 Base frequency ☞page 578

5.16.13 Encoder feedback control V/F Magnetic flux

By detecting the rotation speed of the motor with the speed detector (encoder) and feeding it back to the inverter, output frequency of the inverter is controlled to keep the speed of the motor constant even for the load change.
Option FR-A8AP is required.

Pr.	Name	Initial value	Setting range	Description	
144 **M002**	**Speed setting switchover**	4	0, 2, 4, 6, 8, 10, 12, 102, 104, 106, 108, 110, 112	Set the number of motor poles for the operation by V/F control and the encoder feed control.	
285 **H416**	**Overspeed detection frequency** *1	9999	0 to 30 Hz	When the difference between the detected frequency and the output frequency exceeds the set value at the time of encoder feedback control, an inverter fault (E.MB1) is generated.	
			9999	Overspeed detection disabled.	
359 *2 **C141**	**Encoder rotation direction**	1	0	Set when using a motor for which forward rotation (encoder) is clockwise (CW) viewed from the shaft 	Set for the operation at 120 Hz or less.
			100		Set for the operation at a frequency higher than 120 Hz.
			1	Set when using a motor for which forward rotation (encoder) is counterclockwise (CCW) viewed from the shaft 	Set for the operation at 120 Hz or less.
			101		Set for the operation at a frequency higher than 120 Hz.
367 *2 **G240**	**Speed feedback range**	9999	0 to 400 Hz	Set the range of speed feedback control.	
			9999	Disables encoder feedback control	
368 *2 **G241**	**Feedback gain**	1	0 to 100	Set when the rotation is unstable or response is slow.	
369 *2 **C140**	**Number of encoder pulses**	1024	0 to 4096	Set the number of encoder pulses output. Set the number of pulses before it is multiplied by 4.	

上正科技有限公司
購買、維修 此手冊零組件
電話： 037-466333
Email: service@repairtw.com
Line id: @zzzz
www.repairtw.com

*1 The speed deviation excess detection frequency is used when FR-A8AP (option) is mounted and vector control is performed. (For the details, refer to page 202.)

*2 These parameters are available when FR-A8AP (option) is installed.

(1) Setting before operation (Pr.144, Pr.359, Pr.369)

- When driving with V/F control and the encoder feedback control, set the number of motor poles in **Pr.144 Speed setting switchover** in accordance with the applied motor. During Advanced magnetic flux vector, the **Pr.81 Number of motor poles** setting is used, so the **Pr.144** setting does not need to be changed.
- Using **Pr.359 Encoder rotation direction** and **Pr.369 Number of encoder pulses**, set the rotation direction and the number of pulses for the encoder.

REMARKS

- When the inverter is operated with **Pr.144** = "0, 10, 110", it will cause E.1 to E.3.
- When set to **Pr.144** = "102, 104, 106, 108", number with 100 subtracted will be set as the number of poles.
- When **Pr.81** is set, setting value for **Pr.144** will be automatically changed, but even if **Pr.144** is changed, **Pr.81** will not automatically change.
- Control with correct speed is not possible if the number of poles for the applied motor is incorrect. Make sure to confirm before operation.
- Encoder feedback control is not possible when the rotation direction setting of the encoder is incorrect. (Operation of the inverter is possible.)
  Confirm with the rotation direction indicator on the parameter unit.

(2) Selection of encoder feedback control (Pr.367)

- When a value other than "9999" is set in **Pr. 367 Speed feedback range**, encoder feedback control is valid.
  Using the set point (frequency at which stable speed operation is performed) as reference, set the higher and lower setting range. Normally, set the frequency converted from the slip amount (r/min) of the rated motor speed (rated load). If the setting is too large, response becomes slow.

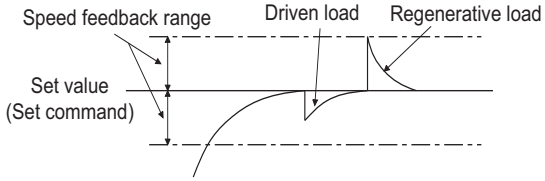

- For example, when the rated speed of a motor (4 poles) is 1740 r/min at 60 Hz,
  Slip Nsp = Synchronous speed - Rated speed
  = 1800 - 1740
  = 60(r/min)
  Frequency equivalent to slip (fsp) = Nsp × Number of poles/120
  = 60 × 4/120
  = 2(Hz)

(3) Feedback gain (Pr.368)

- Set **Pr.368 Feedback gain** when the rotation is unstable or response is slow.
- Response of the feedback will become slow when the acceleration/deceleration time is long. In such case, increase the setting value of **Pr.368**.

上正科技有限公司
購買、維修此手冊零組件
電話：037-466533
Email: service@repairtw.com
Line id @zzzz
www.repairtw.com

Pr.368 setting	Description
Pr.368 > 1	Response will become faster but it may cause overcurrent or become unstable.
1 > **Pr.368**	Response will become slower but it will become more stable.

(4) Overspeed detection (Pr.285)

- To prevent malfunction when the correct pulse signal cannot be detected from the encoder, when [detection frequency] - [output frequency] ≥ **Pr.285**
  at the time of encoder feedback control, protective function (E.MB1) will activate and the inverter will shutoff output.
- Overspeed detection is not performed when **Pr.285** = "9999".

REMARKS

- Couple the encoder on the same axis as the motor axis without any mechanical clatter, with speed ratio of 1:1.
- Encoder feedback control is not performed during the acceleration and deceleration to prevent the unstable phenomenon such as hunting.
- Encoder feedback control is performed after the output frequency has reached [set frequency] ± [speed feedback range] once.
- When following status occurs at the time of encoder feedback control operation, inverter will not stop with an alarm, and operate with output frequency of [set frequency] ± [speed feedback range], and will not follow the speed of the motor.
  •When the pulse signal from the encoder is lost due to a break, etc.
  •When correct pulse signal cannot be detected due to induction noise, etc.
  •When the motor is forcefully accelerated (regenerative rotation) or decelerated (motor lock) due to large external force
- Use the Inverter running (RUN) signal when releasing the brake from the motor with a brake. (The brake may not be released when the Output frequency detection (FU) signal is used.)
- Do not turn OFF the external power supply for the encoder at the time of encoder feedback control. Correct encoder feedback control will not be possible.

♦ **Parameters referred to** ♦

Pr.81 Number of motor poles ☞ page 160, page 428

5.16.14 Droop control Magnetic flux Sensorless Vector PM

This is a function to give droop characteristics to the speed by balancing the load in proportion with the load torque during the Advanced magnetic flux vector control, Real sensorless vector control, vector control, and PM sensorless vector control.
This is effective when balancing the load when using multiple inverters.

Pr.	Name	Initial value	Setting range	Description	
286 G400	Droop gain	0%	0	Normal operation	
			0.1% to 100%	Droop control enabled Set the droop amount at the time of rated torque as % value of the rated motor frequency.	
287 G401	Droop filter time constant	0.3 s	0 to 1 s	Set the filter time constant to apply to the current for torque.	
288 G402	Droop function activation selection	0	0	Without droop control during acceleration/deceleration (With 0 limit)	Rated motor frequency is the droop compensation reference
			1	Constantly droop control during operation (With 0 limit)	
			2	Constantly droop control during operation (Without 0 limit)	
			10	Without droop control during acceleration/deceleration (With 0 limit)	Motor speed is the droop compensation reference
			11	Constantly droop control during operation (With 0 limit)	
994 G403	Droop break point gain	9999	0.1 to 100%	Set the droop amount to be changed as % value of the rated motor frequency.	
			9999	No function	
995 G404	Droop break point torque	100%	0.1 to 100%	Set the torque when the droop amount is to be changed.	

上正科技有限公司
購買、維修 此手冊圖紙
電話： 037-466333
Email: service@repairtw.com
Line id: @zzzz
www.repairtw.com

(1) Droop control

- Droop control is enabled for Advanced magnetic flux vector control, Real sensorless vector control, vector control, and PM sensorless vector control.
- Output frequency will change depending on the size of the current for torque with the droop control.
  Set % of the droop amount of rated torque with rated frequency (motor speed in case of **Pr.288** = "10, 11") as a reference for the droop gain.
- Upper limit of the droop compensation frequency is smaller frequency between 400 Hz and **Pr.1 Maximum frequency**.
- During PM sensorless vector control, the lowest frequency among 400 Hz, **Pr.1**, and maximum motor frequency becomes the upper limit droop compensation frequency.

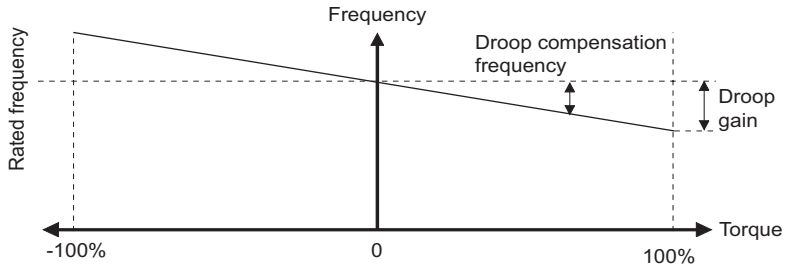

When **Pr.288** = "0 to 2" or Advanced magnetic flux control

$$\text{Droop compensation frequency} = \frac{\text{Current for torque after filtering}}{\text{Rated torque current}} \times \frac{\text{Rated motor frequency} \times \text{droop gain}}{100}$$

When **Pr.288** = "10, 11"

$$\text{Droop compensation frequency} = \frac{\text{Current for torque after filtering}}{\text{Rated torque current}} \times \frac{\text{Motor speed} \times \text{droop gain}}{100}$$

REMARKS

Setting of the droop gains should be approximately the rated slip of the motor.

$$\text{Rated slip} = \frac{\text{Synchronized speed at the time of base frequency - rated rotation speed}}{\text{Synchronized speed at the time of base frequency}} \times 100[\%]$$

(2) Limiting the frequency after the droop compensation (0 limit)

- By setting **Pr.288** at the time of Real sensorless vector control, vector control, or PM sensorless control, the negative frequency command when the frequency after droop compensation can be limited.

Pr.288 Setting	Operation	When the droop compensation frequency is negative	Droop compensation reference
0 (initial value)	Without droop control during acceleration/deceleration	Limit with 0 Hz (Limit with 0.5 Hz under Advanced magnetic flux vector control)	Rated motor frequency
10*1			Motor speed
1*1	Constantly droop control during operation		Rated motor frequency
11*1			Motor speed
2*1	Constantly droop control during operation	Do not limit (reverse) (At the time of vector control, PM sensorless vector control)	Rated motor frequency
		Limit with 0 Hz (At the time of Real sensorless vector control)	

*1 During Advanced magnetic flux vector control, the action same as the "0" setting will be performed.

上正科技有限公司
購買 維修 此手冊零組件
電話：037-466333
Email: service@repairtw.com
Line id: @rsm
www.epartw.com

(3) Droop control break point setting (Pr.994, Pr.995)

- By setting **Pr.994** and **Pr.995**, break point (1 point) can be set up for the droop compensation frequency. Setting a break point allows the inverter to raise the droop compensation frequency for light-load (no load) operation without raising it for heavy-load operation.

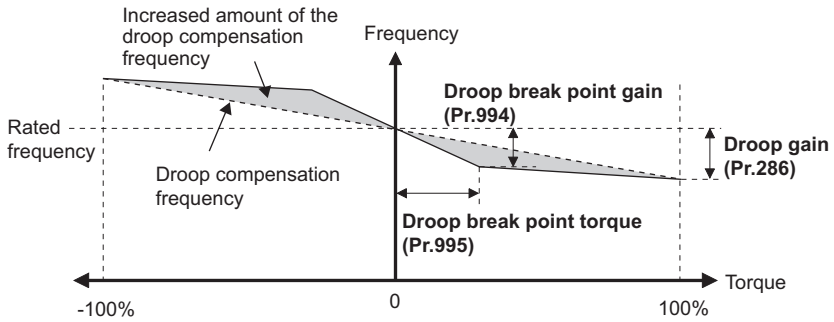

REMARKS

- Droop break point function is disabled in one of following conditions. (Linear compensation by **Pr.286** will be performed.)
  - **Pr.995** = "100% (initial value)"
  - **Pr.286** <**Pr.994**
  - **Pr.994** ≤ **Pr.995** × **Pr.286** / 100%

♦ **Parameters referred to** ♦

Pr.1 Maximum frequency ☞ page 334

5.16.15 Speed smoothing control V/F Magnetic flux

There are times where the vibration due to mechanical resonance affect the inverter, making the output current (torque) unstable. In such case, vibration can be decreased by reducing the deviation in the output current (torque) by changing the output frequency.

Pr.	Name	Initial value	Setting range	Description
653 G410	**Speed smoothing control**	0%	0 to 200%	Confirm the effect by raising and lowering the value with 100% as a reference.
654 G411	**Speed smoothing cutoff frequency**	20 Hz	0 to 120 Hz	Set the lower limit of the torque deviation cycle (frequency).

(1) Control block diagram

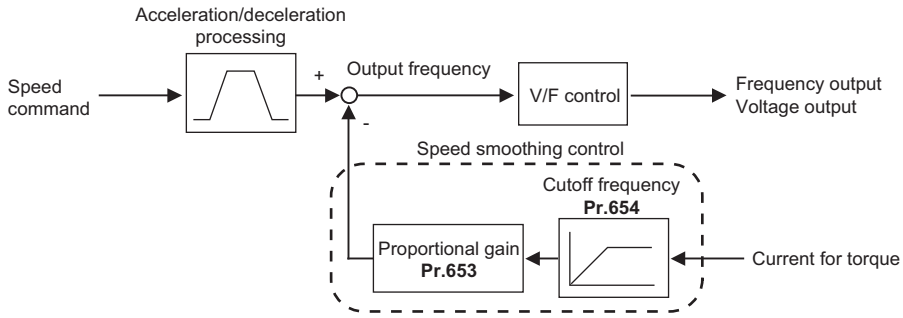

(2) Setting method

上正科技有限公司
購買、維修 此主機零組件
電話： 037-466333
Email: service@repairtw.com
Line id: @zzzz
www.repairtw.com

- When vibration caused by mechanical resonance occurs, set **Pr.653 Speed smoothing control** to 100%, and operate at the operation frequency with largest vibration, and confirm if the vibration is suppressed after few seconds.
- If there is no effect, gradually raise the setting value of **Pr.653**, perform the operation and confirmation of the effect repeatedly, and use the value (**Pr.653**) with most effect as the final setting value.
- If the vibration gets larger by raising **Pr.653**, lower the value of **Pr.653** under 100%, and perform the confirmation of result in a same manner.
- When the vibration frequency (frequency of torque deviation, speed deviation, or converter output voltage deviation) by the mechanical resonance with a measurement device, etc., set the frequency of 1/2 to 1 times the vibration frequency in **Pr.654 Speed smoothing cutoff frequency**. (Setting vibrational frequency range can suppress the vibration better.)

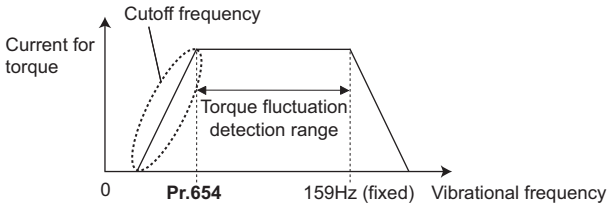

REMARKS

- Depending on the equipment, the vibration may not be suppressed sufficiently or the effect is not obtained.

5.17 Parameter clear / all parameter clear

POINT

- Set "1" to **Pr.CLR Parameter clear, ALL.CL All parameter clear** to initialize all parameters. (Parameters cannot be cleared when **Pr.77 Parameter write selection** = "1".)
- Pr.CL does not clear calibration parameters or the terminal function selection parameters.
- Refer to the parameter list on page 691 for parameters cleared with this operation.

Operation

1. Screen at power-ON

The monitor display appears.

2. Changing the operation mode

Press PU/EXT to choose the PU operation mode. [PU] indicator is lit.

3. Parameter setting mode

Press MODE to choose the parameter setting mode. (The parameter number read previously appears.)

4. Selecting the parameter number

To perform a parameter clear, turn the dial to "Pr.CLR", and to perform all parameter clear, turn it to "ALLCL" and press SET. "0" (initial value) appears.

5. Parameter clear

Turn the dial to change the set value to "1". Press SET to enter the setting. "1" and "Pr.CLR" ("ALLCL") flicker alternately after parameters are cleared.

- Turn the dial to read another parameter.
- Press SET to show the setting again.
- Press SET twice to show the next parameter.

上正科技有限公司
購買、維修 此手冊零組件
電話： 037-466333
Email: service@repairtw.com
Line id: @zzzz
www.repairtw.com

Setting	Description	
	Pr.CLR Parameter clear	ALL.CL All parameter clear
0	Initial display (Parameters are not cleared.)	
1	Returns parameters excluding **calibration parameters and terminal function selection parameters** to their initial values.	Returns all parameters which can be cleared including **calibration parameters and terminal function selection parameters** to their initial values.

REMARKS

- "1" and "Er.4" are displayed alternately... Why?

  ☞The inverter is not in the PU operation mode.

  1) Press PU/EXT.

     PU is lit, and "1" appears on the monitor. (When **Pr.79** ="0" (initial value))

  2) Press SET to clear the parameter.
- Stop the inverter first. A writing error occurs if a parameter clear is attempted while the inverter is running.
- To perform a parameter clear, the inverter must be in the PU operation mode even if "2" is set to **Pr.77**.
- For availability of parameter clear and all parameter clear for each parameter, refer to the parameter list on page 691.

5.18 Copying and verifying parameters on the operation panel

Pr.CPY setting value	Description
0.---	Initial display
1.RD	Copy the source parameters to the operation panel.
2.WR	Write the parameters copied to the operation panel to the destination inverter.
3.VFY	Verify parameters in the inverter and operation panel. **(Refer to page 611.)**

REMARKS

- When the destination inverter is other than the FR-A800 series or when parameter copy is attempted after the parameter copy reading was stopped, "model error (rE4)" appears.
- Refer to the parameter list on **page 691** for the availability of parameter copy.
- When the power is turned OFF or an operation panel is disconnected, etc. during parameter copy writing, write again or check the setting values by parameter verification.
- When parameters are copied from a different-capacity inverter, there are parameters with different initial values depending on the inverter capacity, so the setting values of some parameters will be automatically changed. After performing a parameter copy from a different-capacity inverter, check all the parameter settings. (Refer to the parameter list (**page 122**) for details of parameters with different initial values depending on individual inverter capacity.)
- If parameters are copied from an older inverter to a newer inverter that has additional parameters, out-of-range setting values may be written in some parameters. In that case, those parameters operate as if they were set to their initial values.

5.18.1 Parameter copy

上正科技有限公司
購買、維修 此手冊零組件
電話： 037-466333
Email: service@repairtw.com
Line id: @zzzz
www.repairtw.com

- Inverter parameter settings can be copied to other inverters.

(1) Reading the parameter settings of the inverter to the operation panel

	Operation
1.	Connect the operation panel to the source inverter.
2.	Parameter setting mode Press MODE to choose the parameter setting mode. (The parameter number read previously appears.)
3.	Selecting the parameter number Turn ⊛ to Pr.CPY (parameter copy), and press SET. "0.-- -- --" appears.
4.	Reading to operation panel Turn ⊛ to change the set value to "1.Rd". Press SET to start reading of the inverter parameter settings by the operation panel. (It takes about 30 seconds to read all the settings. During reading, "1.Rd" flickers.)
5.	End reading "1.Rd" and "Pr.CPY" flicker alternately after settings are read.

REMARKS

- rE1 appears... Why?
  -Parameter read error. Perform the operation from step 3 again.

5

(2) Copying parameter settings read to the operation panel to the inverter

	Operation
1.	Connect the operation panel to the destination inverter.
2.	Parameter setting mode Press MODE to choose the parameter setting mode. (The parameter number read previously appears.)
3.	Selecting the parameter number Turn to Pr.CPY (parameter copy), and press SET. "0.-- -- --" appears.
4.	Selecting parameter copy Turn to change the setting value to "2.WR" and press SET. 2. ALL appears.
5.	Copying to the inverter Press SET to start copying to the inverter. (It takes about 60 seconds to copy all the settings. During copying, the selected parameter group flickers.) Perform this step while the inverter is stopped. (Parameter settings cannot be copied during operation.)
6.	Ending copying "2.WR" and "Pr.CPY" flicker alternately after copying ends.
7.	When parameters are written to the destination inverter, reset the inverter before operation by, for example, turning the power supply OFF.

REMARKS

- rE2 appears... Why?
  ☞Parameter write error. Perform the operation from step 3 again.
- CP and 0.00 are displayed alternately.
  - Appears when parameter copy is performed between inverters FR-A820-03160(55K) or lower or inverters FR-A840-01800(55K) or lower and inverters FR-A820-03800(75K) or higher or FR-A840-02160(75K) or higher.
  - When CP and 0.00 flicker alternately, set the **Pr.989 Parameter copy alarm release** as shown below (initial value).

Pr.989 setting	Operation
10	Cancels the alarm of FR-A820-03160(55K) or lower and FR-A840-01800(55K) or lower.
100	Cancels the alarm of FR-A820-03800(75K) or higher and FR-A840-02160(75K) or higher.

  - After setting **Pr.989**, perform setting of **Pr.9, Pr.30, Pr.51, Pr.56, Pr.57, Pr.61, Pr.70, Pr.72, Pr.80, Pr.82, Pr.90 to Pr.94, Pr.453, Pr.455, Pr.458 to Pr.462, Pr.557, Pr.859, Pr.860, and Pr.893** again.

上正科技有限公司
購買、維修 此手冊零組件
電話： 037-466333
Email: service@repairtw.com
Line Id: @2222
www.repairtw.com

5.18.2 Parameter verification

- Whether the parameter settings of inverters are the same or not can be checked.

Operation

1.	Copy the parameter settings of the verification source inverter to operation panel according to the procedure on page 609.
2.	Move the operation panel to the inverter to be verified.
3.	Screen at power-ON The monitor display appears.
4.	Parameter setting mode Press MODE to choose the parameter setting mode. (The parameter number read previously appears.)
5.	Selecting the parameter number Turn  to "PrCPY" (parameter copy) and press SET. "0---" appears.
6.	Parameter verification Turn  to change to setting value "3VFY" (parameter copy verification mode). Press SET. Verification of the parameter settings copied to the operation panel and the parameter settings of the verification destination inverter is started. (It takes about 60 seconds to verify all the settings. During verification, "3VFY" flickers.) •If there are different parameters, the different parameter number and "rE3" flicker. •To continue verification, press SET.
7.	"PrCPY" and "3VFY" flicker alternately after verification ends.

REMARKS

- rE3 flickers... Why?

  -The set frequency may be incorrect. To continue verification, press SET.

上正科技有限公司
購買、維修 此手冊零組件
電話： 037-466333
Email: service@repairtw.com
Line id: @zzzz
www.repairtw.com

5.19 Copying and verifying parameters using USB memory

- Inverter parameter settings can be copied to USB memory.
- Parameter setting data copied to USB memory can be copied to other inverters or verified to see if they differ from the parameter settings of other inverters.
- Parameter settings can also be imported to a personal computer and edited in FR Configurator 2.

(1) Changes in USB memory copy operation states

- Insert the USB memory in the inverter. The USB memory mode is displayed and USB memory operations are possible.

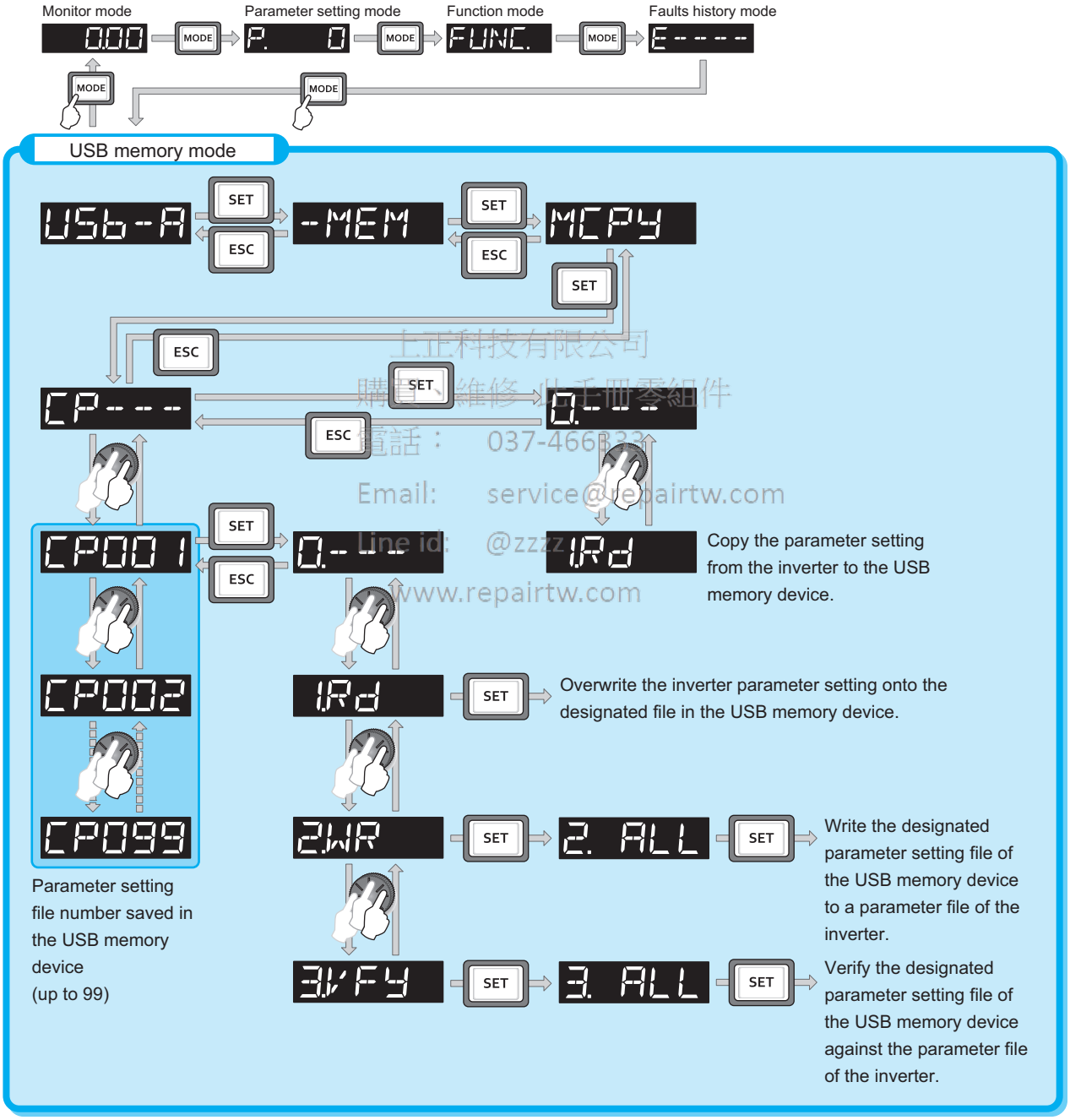

REMARKS

- When parameter settings are copied to USB memory without specifying a parameter setting file number in USB memory, numbers are automatically assigned.
- Up to 99 files can be saved on USB memory. When the USB memory device already has 99 files, attempting copying of another file to the USB memory device causes the file quantity error (rE7).
- Refer to the FR Confirurator 2 instruction manual for details on importing files to FR Configurator 2.

(2) Procedure for copying parameters to USB memory

	Operation
1.	Insert the USB memory into the copy source inverter.
2.	USB memory mode Press MODE to change to the USB memory mode.
3.	Displaying the file selection screen Press SET three times to display CP---- (file selection screen) and press SET. (To overwrite files on USB memory, display the file selection screen, turn  to select the file number, and press SET.)
4.	Copying to USB memory Turn  to change to "IRd". Press SET to copy the parameter settings at the copy source to USB memory. (It takes about 15 seconds to copy all the settings. During copying, "IRd" flickers.) "IRd" and "file number when the parameter file was copied to USB memory" flicker after copying ends.

(3) Procedure for copying parameters from USB memory to inverter

	Operation
1.	Insert the USB memory into the destination inverter.
2.	USB memory mode Press MODE to change to the USB memory mode.
3.	Displaying the file selection screen Press SET three times to display CP---- (file selection screen).
4.	Selecting the file number Turn  to select the file number to copy to the inverter, and press SET.
5.	Turn  to display "2.WR" and press SET. 2. ALL appears.
6.	Writing to the inverter Press SET to write the parameters copied to the USB memory to the destination inverter. (It takes about 15 seconds to copy all the settings. During copying, "2. ALL" flickers.) "2. ALL" and "copied file number" flicker after copying ends. Perform this step while the inverter is stopped.
7.	When parameters are written to the destination inverter, reset the inverter before operation by, for example, turning the power supply OFF.

上正科技有限公司
購買 維修 此手冊零組件
電話： 037-466333
Email: service@repairtw.com
Line id: @zzzz
www.repairtw.com

REMARKS

- rE1, rE2 appears... Why?
  -A fault occurred on USB memory. Check the USB memory connection, then retry.
- ?CP and 0.00 are displayed alternately.
  - Appears when parameter copy is performed between inverters FR-A820-03160(55K) or lower or inverters FR-A840-01800(55K) or lower and inverters FR-A820-03800(75K) or higher or FR-A840-02160(75K) or higher.
  - When CP and 0.00 flicker alternately, set the **Pr.989 Parameter copy alarm release** as shown below (initial value).

Pr.989 setting	Operation
10	Cancels the alarm of FR-A820-03160(55K) or lower and FR-A840-01800(55K) or lower.
100	Cancels the alarm of FR-A820-03800(75K) or higher and FR-A840-02160(75K) or higher.

  - After setting **Pr.989**, perform setting of **Pr.9, Pr.30, Pr.51, Pr.56, Pr.57, Pr.61, Pr.70, Pr.72, Pr.80, Pr.82, Pr.90 to Pr.94, Pr.453, Pr.455, Pr.458 to Pr.462, Pr.557, Pr.859, Pr.860, and Pr.893** again.
- When the destination inverter is other than the FR-A800 series or when parameter copy is attempted after the parameter copy reading was stopped, "model error (rE4)" appears.
- Refer to the parameter list on page 691 for the availability of parameter copy.
- When the power is turned OFF or an operation panel is disconnected, etc. during parameter copy writing, write again or check the setting values by parameter verification.
- When parameters are copied from a different-capacity inverter, there are parameters with different initial values depending on the inverter capacity, so the setting values of some parameters will be automatically changed. After performing a parameter copy from a different-capacity inverter, check all the parameter settings. (Refer to the parameter list (page 122) for details of parameters with different initial values depending on individual inverter capacity.)

(4) Procedure for verifying parameters in USB memory

	Operation
1.	Copy the parameter settings of the verification source inverter to USB memory according to the procedure on page 613.
2.	Move the USB memory to the inverter to be verified.
3.	Screen at power-ON The monitor display appears.
4.	USB memory mode Press MODE to change to the USB memory mode.
5.	Displaying the file selection screen Press SET three times to display CP---- (file selection screen).
6.	Selecting the file number Turn to select the file number to be verified, and press SET.
7.	Parameter verification Turn to display the setting "3V FY" (parameter copy verification mode), and press SET. "3. ALL" appears. Press SET. Verification of the parameter settings copied to the USB memory and the parameter settings of the verification destination inverter is started. (It takes about 15 seconds to verify all the settings. During verification, "3. ALL" flickers.) If there are different parameters, the different parameter number and "rE3" flicker. To continue verification, press SET.
8.	"Verified file number" and "3. ALL" flicker after verification ends.

REMARKS

- rE3 flickers... Why?
  -The set frequency may be incorrect. To continue verification, press SET.

上正科技有限公司
購買、維修 此手冊零組件
電話： 037-466333
Email: service@repairtw.com
Line Id: @zzzz
www.repairtw.com

5.20 Checking parameters changed from their initial values (Initial value change list)

Parameters changed from their initial values can be displayed.

Operation

1. Screen at power-ON

The monitor display appears.

2. Parameter setting mode

Press [MODE] to choose the parameter setting mode. (The parameter number read previously appears.)

3. Selecting the parameter number

Turn  to PrCHG (parameter copy), and press [SET].

"P.-- -- -- --" appears.

4. Checking the initial value change list

Turn  . The parameter numbers that have been changed from their initial value appear in order.

If [SET] is pressed with parameters that have been changed, the parameter settings can be changed as they are. (Parameter numbers are no longer displayed in the list when they are returned to their initial values.)

Other changed parameters appear by turning  .

"P.-- -- -- --" is returned to when the last changed parameter is displayed.

上正科技有限公司
購買、維修 此手冊零組件
電話： 037-466333
Email: service@repairtw.com
Line Id: @zzz
www.repairtw.com

REMARKS

- Calibration parameters **(C0 (Pr.900) to C7 (Pr.905), C42 (Pr.934) to C45 (Pr.935))** are not displayed even when these are changed from the initial settings.
- Only the simple mode parameters are displayed when the simple mode is set (**Pr.160** ="9999 (initial value)").
- Only user groups are displayed when user groups are set (**Pr.160** = "1").
- **Pr.160** is displayed independently of whether the setting value is changed or not.
- Parameter setting using the initial value change list is also possible.

MEMO

上正科技有限公司
購買、維修 此手冊零組件
電話： 037-466333
Email: service@repairtw.com
Line id: @zzzz
www.repairtw.com

6 PROTECTIVE FUNCTIONS

This chapter explains the "PROTECTIVE FUNCTION" that operates in this product.
Always read the instructions before using the equipment.

上正科技有限公司
購買、維修 此手冊零組件
電話： 037-466333
Email: steve@repairtw.com
Line Id: @2222
www.repairtw.com

6.1 Inverter fault and alarm indications 618
6.2 Reset method for the protective functions 618
6.3 Check and clear of the faults history 619
6.4 Faults history and the list of fault displays 621
6.5 Causes and corrective actions 623
6.6 Check first when you have a trouble 643

6.1 Inverter fault and alarm indications

- When the inverter detects a fault, depending on the nature of the fault, the operation panel displays an error message or warning, or a protective function activates to trip the inverter.
- When any fault occurs, take an appropriate corrective action, then reset the inverter, and resume the operation. Restarting the operation without a reset may break or damage the inverter.
- When a protective function activates, note the following points.

Item	Description
Fault output signal	Opening the magnetic contactor (MC) provided on the input side of the inverter at a fault occurrence shuts off the control power to the inverter, therefore, the fault output will not be retained.
Fault or alarm indication	When a protective function activates, the operation panel displays a fault indication.
Operation restart method	While a protective function is activated, the inverter output is kept shutoff. Reset the inverter to restart the operation.

- Inverter fault or alarm indications are categorized as below.

Displayed item	Description
Error message	A message regarding an operational fault and setting fault by the operation panel (FR-DU08) and parameter unit (FR-PU07). The inverter does not trip.
Warning	The inverter does not trip even when a warning. However, failure to take appropriate measures will lead to a fault.
Alarm	The inverter does not trip. An Alarm (LF) signal can also be output with a parameter setting.
Fault	A protective function activates to trip the inverter and output a Fault (ALM) signal.

REMARKS

- The past eight faults can be displayed on the operation panel. (Faults history) (For the operation, refer to page 619.)

上正科技有限公司
購買、維修 此手冊零組件
Email: service@repairtw.com
Line Id: @2222
www.repairtw.com

6.2 Reset method for the protective functions

Reset the inverter by performing any of the following operations. Note that the accumulated heat value of the electronic thermal relay function and the number of retries are cleared (erased) by resetting the inverter.
The inverter recovers about 1 s after the reset is released.

- On the operation panel, press STOP RESET to reset the inverter.
  (This may only be performed when a fault occurs. (Refer to page 629 of the Instruction Manual for faults.))

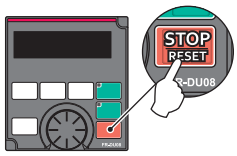

- Switch the power OFF once, then switch it ON again.

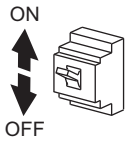

- Turn ON the reset signal (RES) for 0.1 s or more. (If the RES signal is kept ON, "Err" appears (flickers) to indicate that the inverter is in a reset status.)

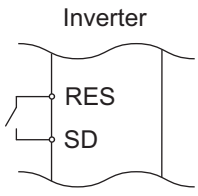

REMARKS

- OFF status of the start signal must be confirmed before resetting the inverter fault. Resetting an inverter fault with the start signal ON restarts the motor suddenly.

6.3 Check and clear of the faults history

The operation panel stores the fault indications which appears when a protective function is activated to display the fault record for the past eight faults. (Faults history)

(1) Check for the faults history

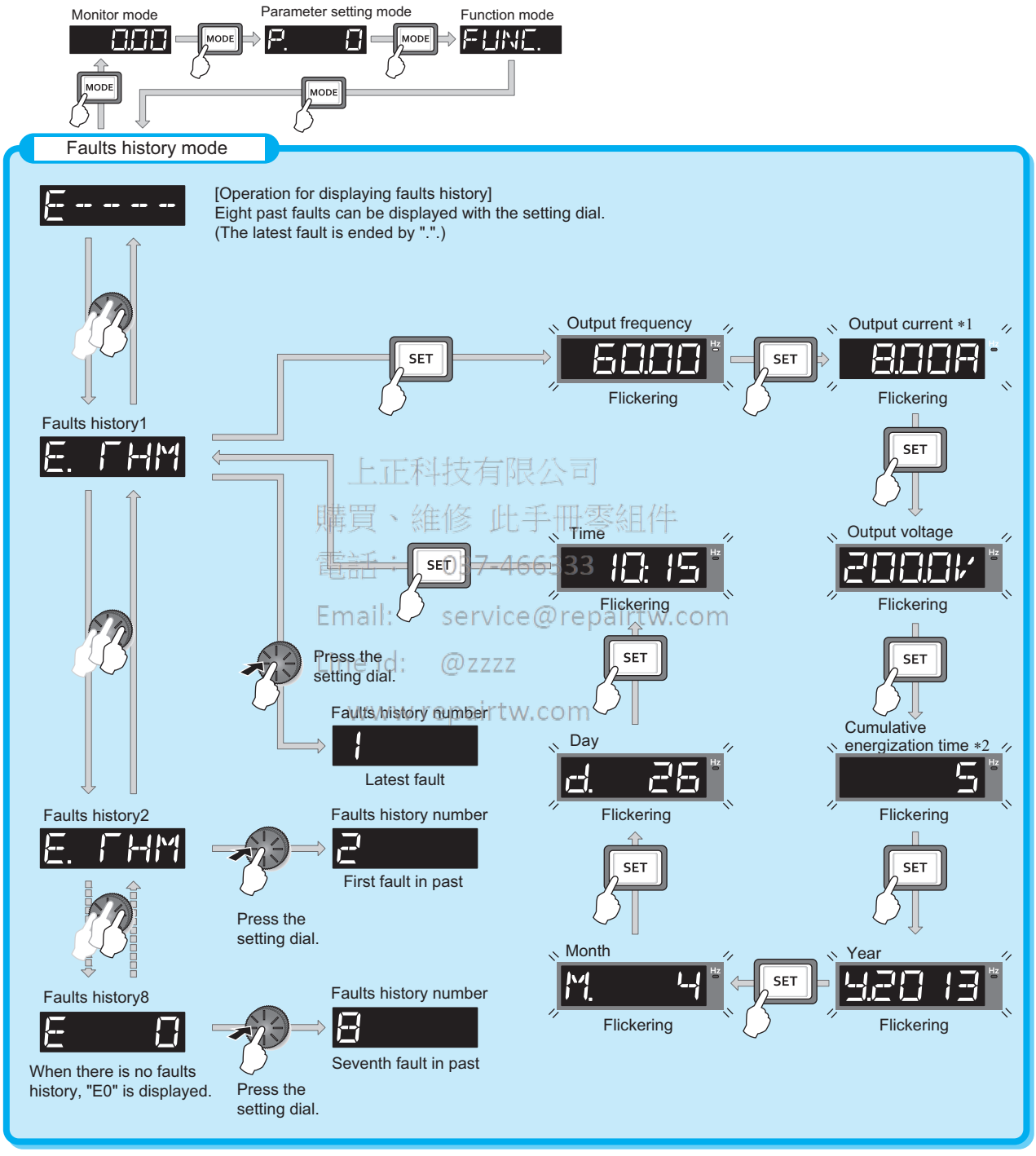

*1 When an overcurrent trip occurs by an instantaneous overcurrent, the monitored current value saved in the faults history may be lower than the actual current that has flowed.

*2 The cumulative energization time and actual operation time are accumulated from 0 to 65535 hours, then cleared, and accumulated again from 0.

(2) Faults history clearing procedure

POINT

- Set **Err.CL Fault history clear** = "1" to clear the faults history.

	Operation
1.	Screen at power-ON The monitor display appears.
2.	Parameter setting mode Press MODE to choose the parameter setting mode. (The parameter number read previously appears.)
3.	Selecting the parameter number Turn until Err.CL (faults history clear) appears. Press SET to read the present set value. "0" (initial value) appears.
4.	Faults history clear Turn to change the set value to " 1". Press SET to start clear. " 1" and "Err.CL " flicker alternately after parameters are cleared. • Turn to read another parameter. • Press SET to show the setting again. • Press SET twice to show the next parameter.

工正科技有限公司
購買、維修 此手冊零組件
電話： 037-466333
Email: service@repairtw.com
Line id: @zzzz
www.repairtw.com

6.4 Faults history and the list of fault displays

If the displayed message does not correspond to any of the following or if you have any other problem, please contact your sales representative.

(1) Error message

- A message regarding operational fault and setting fault by the operation panel (FR-DU08) and parameter unit (FR-PU07) is displayed. The inverter does not trip.

Operation panel indication	Name	Refer to
E-----	Faults history	619
HOLd	Operation panel lock	623
LOCd	Password locked	623
Er 1 to Er4 Er8	Parameter write error	623
rE 1 to rE4 rE6 to rE8	Copy operation error	624
Err.	Error	625

(2) Warning

- The inverter does not trip even when a warning is displayed. However, failure to take appropriate measures will lead to a fault.

Operation panel indication	Name	Refer to page
OL	Stall prevention (overcurrent)	626
oL	Stall prevention (overvoltage)	626
Rb	Regenerative brake pre-alarm	627
TH	Electronic thermal relay function pre-alarm	627
PS	PU stop	627
SL	Speed limit indication	627
CP	Parameter copy	627
SA	Safety stop	628
MT 1 to MT3	Maintenance signal output	628
UF	USB host error	628
HP 1	Home position return setting error	628
HP2	Home position return uncompleted	628
HP3	Home position return parameter setting error	628
EV	24 V external power supply operation	628

(3) Alarm

- The inverter does not trip. An Alarm (LF) signal can also be output with a parameter setting.

Operation panel indication	Name	Refer to page
FN	Fan alarm	629
FN2	Internal-circulation fan alarm	629

(4) Fault

- A protective function trips the inverter and outputs a Fault (ALM) signal.
- The data code is used for checking the fault detail via communication or with **Pr.997 Fault initiation**.

Operation panel indication	Name	Data code	Refer to page
E. OC 1	Overcurrent trip during acceleration	16 (H10)	629
E. OC2	Overcurrent trip during constant speed	17 (H11)	630
E. OC3	Overcurrent trip during deceleration or stop	18 (H12)	630
E. OV 1	Regenerative overvoltage trip during acceleration	32 (H20)	631
E. OV2	Regenerative overvoltage trip during constant speed	33 (H21)	631
E. OV3	Regenerative overvoltage trip during deceleration or stop	34 (H22)	631
E. THT	Inverter overload trip (electronic thermal relay function)	48 (H30)	632
E. THM	Motor overload trip (electronic thermal relay function)	49 (H31)	632
E. FI N	Heatsink overheat	64 (H40)	632
E. I PF	Instantaneous power failure	80 (H50)	633
E. UVT	Undervoltage	81 (H51)	633
E. I LF	Input phase loss	82 (H52)	633
E. OLT	Stall prevention stop	96 (H60)	634
E. SOT	Loss of synchronism detection	97 (H61)	634
E. bE	Brake transistor alarm detection	112 (H70)	634
E. GF	Output side earth (ground) fault overcurrent	128 (H80)	635
E. LF	Output phase loss	129 (H81)	635

上正科技有限公司
購買、維修 此手冊零組件
電話： 037-466333
Email: service@repairtw.com
Line Id: @zzzz
www.repairtw.com

Operation panel indication	Name	Data code	Refer to page
E. OHT	External thermal relay operation	144 (H90)	635
E. PTC	PTC thermistor operation	145 (H91)	635
E. OPT	Option fault	160 (HA0)	636
E. OP1	Communication option fault	161 (HA1)	636
E. 16	User definition error by the PLC function	164 (HA4)	636
E. 17		165 (HA5)	
E. 18		166 (HA6)	
E. 19		167 (HA7)	
E. 20		168 (HA8)	
E. PE	Parameter storage device fault	176 (HB0)	636
E. PUE	PU disconnection	177 (HB1)	637
E. RET	Retry count excess	178 (HB2)	637
E. PE2	Parameter storage device fault	179 (HB3)	637
E. CPU	CPU fault	192 (HC0)	637
E. 5		245 (HF5)	
E. 6		246 (HF6)	
E. 7		247 (HF7)	
E. CTE	Operation panel power supply short circuit RS-485 terminals power supply short circuit	193 (HC1)	637
E. P24	24 VDC power fault	194 (HC2)	638
E. CdO	Abnormal output current detection	196 (HC4)	638
E. IOH	Inrush current limit circuit fault	197 (HC5)	638
E. SER	Communication fault (inverter)	198 (HC6)	638
E. AIE	Analog input fault	199 (HC7)	638
E. USb	USB communication fault	200 (HC8)	639
E. SAF	Safety circuit fault	201 (HC9)	639
E. PbT	Internal circuit fault	202 (HCA)	639
E. 13		253 (HFD)	639
E. OS	Overspeed occurrence	208 (HD0)	639
E. OSd	Speed deviation excess detection	209 (HD1)	640

Operation panel indication	Name	Data code	Refer to page
E. ECT	Signal loss detection	210 (HD2)	640
E. Od	Excessive position fault	211 (HD3)	640
E. Mb1	Brake sequence fault	213 (HD5)	641
E. Mb2		214 (HD6)	
E. Mb3		215 (HD7)	
E. Mb4		216 (HD8)	
E. Mb5		217 (HD9)	
E. Mb6		218 (HDA)	
E. Mb7		219 (HDB)	
E. EP	Encoder phase fault	220 (HDC)	641
E. IAH	Abnormal internal temperature	225 (HE1)	641
E. LCI	4 mA input fault	228 (HE4)	641
E. PCH	Pre-charge fault	229 (HE5)	641
E. PID	PID signal fault	230 (HE6)	642
E. 1	Option fault	241 (HF1)	642
E. 2		242 (HF2)	
E. 3		243 (HF3)	
E. 11	Opposite rotation deceleration fault	251 (HFB)	642

中旺科技有限公司
購買、維修 此手冊零組件
電話： 037-466333
Email: service@repairtw.com
Line id: @zzzz
www.repairtw.com

6.5 Causes and corrective actions

(1) Error message

A message regarding operational troubles is displayed. Output is not shut off.

Operation panel indication	HOLD	HOLd
Name	Operation panel lock	
Description	Operation lock is set. Operation other than STOP RESET is invalid. (Refer to page 256.)	
Check point	———	
Corrective action	Press MODE for 2 s to release the lock.	

Operation panel indication	LOCD	LOCd
Name	Password locked	
Description	Password function is active. Display and setting of parameters are restricted.	
Check point	———	
Corrective action	Enter the password in **Pr.297 Password lock/unlock** to unlock the password function before operating.(Refer to page 264.)	

Operation panel indication	Er1	Er 1
Name	Parameter write error	
Description	• Parameter setting was attempted while **Pr.77 Parameter write selection** is set to disable parameter write. • Overlapping range has been set for the frequency jump. • Overlapping range has been set for the adjustable 5 points V/F. • The PU and inverter cannot make normal communication. • IPM parameter initialization was attempted while **Pr.72** = "25".	
Check point	• Check the **Pr.77 Parameter write selection** setting. (Refer to page 260.) • Check the settings of **Pr.31 to Pr.36 (frequency jump)**. (Refer to page 335.) • Check the settings of **Pr.100 to Pr.109 (adjustable 5 points V/F)**. (Refer to page 583.) • Check the connection of PU and the inverter. • Check the **Pr.72 PWM frequency selection** setting. A sine wave filter cannot be used under PM sensorless vector control.	

Email: service@repairtw.com
www.repairtw.com

Operation panel indication	Er2	Er2
Name	Write error during operation	
Description	Parameter write was attempted while **Pr.77** = "0".	
Check point	• Check that the inverter is stopped.	
Corrective action	• After stopping the operation, make parameter setting. • When setting **Pr.77** = "2", parameter write is enabled during operation. (Refer to page 260.)	

Operation panel indication	Er3	Er3
Name	Calibration error	
Description	Analog input bias and gain calibration values have been set too close.	
Check point	Check the settings of **calibration parameters C3, C4, C6 and C7** (calibration functions). (Refer to page 400.)	

Operation panel indication	Er4	Er4
Name	Mode designation error	
Description	• Parameter setting was attempted in the External or NET operation mode while **Pr.77** = "1". • Parameter write was attempted when the command source is not at the operation panel (FR-DU08).	
Check point	• Check that operation mode is PU operation mode. • Check that the **Pr.551** setting is correct.	
Corrective action	• After setting the operation mode to the "PU operation mode", make parameter setting. (Refer to page 299.) • When **Pr.77** = "2", parameter write is enabled regardless of the operation mode. (Refer to page 260.) • Set **Pr.551** = "2". (Refer to page 308.)	

Causes and corrective actions

Operation panel indication	Er8	Er8
Name	USB memory device operation error	
Description	• An operation command was given during the USB memory device operation. • A copy operation (writing) was performed while the PLC function was in the RUN state. • A copy operation was attempted for a password locked project.	
Check point	• Check if the USB memory device is operating. • Check if the PLC function is in the RUN state. • Check if the project data is locked with a password.	
Corrective action	• Perform the operation after the USB memory device operation is completed. • Stop the PLC function. (Refer to **page 529** and the FR-A800 PLC function programming manual.) • Unlock the password of the project data using FR Configurator2. (Refer to the Instruction Manuals of FR Configurator2 and GX Works2.)	

Operation panel indication	rE1	rE1
Name	Parameter read error	
Description	• A failure has occurred at the operation panel side EEPROM while reading the copied parameters. • A failure has occurred in the USB memory device while copying the parameters or reading the PLC function project data.	
Check point	———	
Corrective action	• Perform parameter copy again. (Refer to **page 609**, **page 612**.) • Perform PLC function project data copy again.(Refer to **page 529**) • The USB memory device may be faulty. Replace the USB memory device. • The operation panel (FR-DU08) may be faulty. Please contact your sales representative.	

上正科技有限公司
購買、維修 此手冊零組件
電話： 037-466333
Email: service@repairtw.com
Line id: @zzzz
www.repairtw.com

Operation panel indication	rE2	rE2
Name	Parameter write error	
Description	• Parameter copy from the operation panel to the inverter was attempted during operation. • A failure has occurred at the operation panel side EEPROM while writing the copied parameters. • A failure has occurred in the USB memory device while writing the copied parameters or PLC function project data.	
Check point	• Check that the inverter is stopped.	
Corrective action	• After stopping the operation, perform parameter copy again. (Refer to **page 609**.) • The operation panel (FR-DU08) may be faulty. Please contact your sales representative. • Perform parameter copy or PLC project data copy again. (Refer to **page 529** and **page 612**) • The USB memory device may be faulty. Replace the USB memory device.	

Operation panel indication	rE3	rE3
Name	Parameter verification error	
Description	• The data in the inverter are different from the data in the operation panel. • A failure has occurred at the operation panel side EEPROM during parameter verification. • A failure has occurred in the USB memory device during parameter verification. • The data in the inverter are different from the data in the USB memory device or the personal computer (FR Configurator2)	
Check point	• Check the parameter setting of the source inverter against the setting of the destination inverter.	
Corrective action	• Continue the verification by pressing SET. Perform parameter verification again. (Refer to **page 611**.) • The operation panel (FR-DU08) may be faulty. Please contact your sales representative. • The USB memory device may be faulty. Replace the USB memory device. • Verify the PLC function project data again.(Refer to **page 529**.)	

Operation panel indication	rE4	rE4
Name	Model error	
Description	• A different model was used when parameter copy from the operation panel or parameter verification was performed. • The data in the operation panel were not correct when parameter copy from the operation panel or parameter verification was performed.	
Check point	• Check that the parameter copy or verification source inverter is of the same model. • Check that parameter copy to the operation panel was not interrupted by switching OFF the power or by disconnecting the operation panel.	
Corrective action	• Perform parameter copy and parameter verification between inverters of the same model (FR-A800 series). • Perform parameter copy to the operation panel from the inverter again.	

Operation panel indication	rE6	rE6
Name	File error	
Description	• The parameter copy file in the USB memory device cannot be recognized. • An error has occurred in the file system during transfer of the PLC function data or writing to RAM.	
Check point	—	
Corrective action	• Perform parameter copy again.(Refer to page 612.) • Copy the PLC function project data again.(Refer to page 529.)	

Operation panel indication	rE7	rE7
Name	File quantity error	
Description	• A parameter copy was attempted to the USB memory device in which the copy files from 001 to 099 had already been saved.	
Check point	• Check if the number of copy files in the USB memory device has reached 99.	
Corrective action	• Delete the copy file in the USB memory device and perform parameter copy again.(Refer to page 612.)	

上正科技有限公司
購買、維修 此手冊零組件
電話： 037-466333
Email: service@repairtw.com
Line id: @zzzz
www.repairtw.com

Operation panel indication	rE8	rE8
Name	No PLC function project file	
Description	The specified PLC function project file does not exist in the USB memory device.	
Check point	• Check that the file exists in the USB memory device. • Check that the folder name and the file name in the USB memory device is correct.	
Corrective action	The data in the USB memory device may be damaged.	

Operation panel indication	Err.	Err.
Description	• The RES signal is turned ON. • The operation panel and inverter cannot make normal communication (contact faults of the connector). • This error may occur when the voltage at the input side of the inverter drops. • When using a separate power source for the control circuit power (R1/L11, S1/L21) from the main circuit power (R/L1, S/L2, T/L3), this error may appear at turning ON of the main circuit. It is not a fault.	
Corrective action	• Turn OFF the RES signal. • Check the connection between the operation panel and the inverter. • Check the voltage on the input side of the inverter.	

(2) Warning

Output is not shut off when a protective function activates.

Operation panel indication	OL		FR-PU07	OL
Name	Stall prevention (overcurrent)			
Description	• When the output current of the inverter increases, the stall prevention (overcurrent) function activates. • The following section explains about the stall prevention (overcurrent) function.			
	During acceleration	When the output current (output torque under Real sensorless vector control or vector control) of the inverter exceeds the stall prevention level (**Pr.22 Stall prevention operation level,** etc.), this function stops the increase in frequency until the overload current decreases to prevent the inverter from resulting in overcurrent trip. When the overload current has reduced below stall prevention operation level, this function increases the frequency again.		
	During constant-speed operation	When the output current (output torque under Real sensorless vector control or vector control) of the inverter exceeds the stall prevention level (**Pr.22 Stall prevention operation level,** etc.), this function reduces frequency until the overload current decreases to prevent the inverter from resulting in overcurrent trip. When the overload current has reduced below stall prevention operation level, this function increases the frequency up to the set value.		
	During deceleration	When the output current (output torque under Real sensorless vector control or vector control) of the inverter exceeds the stall prevention level (**Pr.22 Stall prevention operation level,** etc.), this function stops the decrease in frequency until the overload current decreases to prevent the inverter from resulting in overcurrent trip. When the overload current has decreased below stall prevention operation level, this function decreases the frequency again.		
Check point	• Check that the **Pr.0 Torque boost** setting is not too large. • The **Pr.7 Acceleration time and Pr.8 Deceleration time** settings may be too short. • Check that the load is not too heavy. • Check for any failures in peripheral devices. • Check that the **Pr.13 Starting frequency** is not too large. • Check that **Pr.22 Stall prevention operation level** is appropriate.			
Corrective action	• Gradually increase or decrease the **Pr.0** setting by 1% at a time and check the motor status.(Refer to page 577.) • Set a larger value in **Pr.7 Acceleration time and Pr.8 Deceleration time**. (Refer to page 278.) • Reduce the load. • Try Advanced magnetic flux vector control, Real sensorless vector control, or vector control. • Change the **Pr.14 Load pattern selection** setting. • The stall prevention operation current can be set in **Pr.22 Stall prevention operation level**. (Initial value is 150%.) The acceleration/deceleration time may change. Increase the stall prevention operation level with **Pr.22 Stall prevention operation level**, or disable stall prevention with **Pr.156 Stall prevention operation selection**. (Use **Pr.156** to set either operation continued or not at OL operation.)			

Operation panel indication	oL		FR-PU07	oL
Name	Stall prevention (overvoltage)			
Description	• When the output voltage of the inverter increases, the stall prevention (overvoltage) function activates. • The regeneration avoidance function activates due to excessive regenerative power of the motor. (Refer to page 599.) • The following section explains the stall prevention (overvoltage) function.			
	During deceleration	If the regenerative power of the motor becomes excessive to exceed the regenerative power consumption capability, this function stops decreasing the frequency to prevent overvoltage trip. As soon as the regenerative power has reduced, deceleration resumes.		
Check point	• Check for sudden speed reduction. • Check if the regeneration avoidance function **(Pr.882 to Pr.886)** is being used. (Refer to page 599.)			
Corrective action	The deceleration time may change. Increase the deceleration time using **Pr.8 Deceleration time**.			

購買、維修此手冊零組件
電話：037-466333
email: service@repairtw.com
Line id: @zzzz
www.repairtw.com



Operation panel indication	RB	Rb	FR-PU07	RB
Name	Regenerative brake pre-alarm			
Description	Appears if the regenerative brake duty reaches or exceeds 85% of the **Pr.70 Special regenerative brake duty** value. If the regenerative brake duty reaches 100%, a regenerative overvoltage (E. OV[ ]) occurs.			
Check point	• Check if the brake resistor duty is not too high. • Check that the **Pr.30 Regenerative function selection** and **Pr.70** settings are correct.			
Corrective action	• Set the deceleration time longer. • Check the **Pr.30** and **Pr.70** settings. (Refer to page 593.)			



Operation panel indication	TH	TH	FR-PU07	TH
Name	Electronic thermal relay function pre-alarm			
Description	Appears if the cumulative value of the electronic thermal O/L relay reaches or exceeds 85% of the preset level of **Pr.9 Electronic thermal O/L relay**. If the value reaches 100% of **Pr.9** setting, motor overload trip (E.THM) occurs.			
Check point	• Check for large load or sudden acceleration. • Check that the **Pr.9** setting is appropriate. (Refer to page 322.)			
Corrective action	• Reduce the load and frequency of operation. • Set an appropriate value in **Pr.9**. (Refer to page 322.)			



Operation panel indication	PS	PS	FR-PU07	PS
Name	PU stop			
Description	• The motor is stopped using STOP RESET under the mode other than the PU operation mode. (To enable STOP RESET under the mode other than the PU operation mode, set **Pr.75 Reset selection/disconnected PU detection/PU stop selection**. Refer to page 252 for details.) • The motor is stopped by the emergency stop function.			
Check point	• Check for a stop made by pressing STOP RESET of the operation panel. • Check for whether the X92 signal is OFF.			
Corrective action	• Turn the start signal OFF and release with PU EXT. • Turn ON the X92 signal and OFF the start signal for release.			

上正科技有限公司
購買、維修 此手冊零組件
電話： 037-466333
Email: service@repairtw.com
Line id: @2222
www.repairtw.com



Operation panel indication	SL	SL	FR-PU07	SL
Name	Speed limit indication			
Description	Output if the speed limit level is exceeded during torque control.			
Check point	• Check that the torque command is not larger than required. • Check if the speed limit level is set too low.			
Corrective action	• Decrease the torque command value. • Increase the speed limit level.			



Operation panel indication	CP	CP	FR-PU07	CP
Name	Parameter copy			
Description	Appears when parameter copy is performed between inverters FR-A820-03160(55K) or lower, FR-A840-01800(55K) or lower, FR-A820-03800(75K) or higher and FR-A840-02160(75K) or higher			
Check point	Resetting of **Pr.9, Pr.30, Pr.51, Pr.56, Pr.57, Pr.61, Pr.70, Pr.72, Pr.80, Pr.82, Pr.90 to Pr.94, Pr.453, Pr.455, Pr.458 to Pr.462, Pr.557, Pr.859, Pr.860 and Pr.893** is necessary.			
Corrective action	Set the initial value in **Pr.989 Parameter copy alarm release**.			

Operation panel indication	SA	SA	FR-PU07	—
Name	Safety stop			
Description	Appears when safety stop function is activated (during output shutoff). (Refer to page 57.)			
Check point	• Check if an emergency stop device is activated. • Check if the shorting wire between S1 and PC or between S2 and PC is disconnected when not using the safety stop function.			
Corrective action	• An emergency stop device is active when using the safety stop function. Identify the cause of emergency stop, ensure the safety and restart the system. • When not using the safety stop function, short across terminals S1 and PC and across S2 and PC with shorting wire for the inverter to run. • If SA is indicated when wires across S1 and SIC and across S2 and SIC are both conducted while using the safety stop function (drive enabled), internal failure might be the cause. Check the wiring of terminals S1, S2 and SIC and contact your sales representative if the wiring has no fault.			

Operation panel indication	MT1 to MT3	MT 1 to MT 3	FR-PU07	MT*1
Name	Maintenance signal output 1 to 3			
Description	Appears when the inverter's cumulative energization time reaches or exceeds the parameter set value. Set the time until the MT is displayed using **Pr.504 Maintenance timer 1 warning output set time** (MT1), **Pr.687 Maintenance timer 2 warning output set time** (MT2), and **Pr.689 Maintenance timer 3 warning output set time** (MT3). MT does not appear when the settings of **Pr.504, Pr.687, and Pr.689** are initial values (9999).			
Check point	The set time of maintenance timer has been exceeded. (Refer to page 274.)			
Corrective action	Take appropriate countermeasures according to the purpose of the maintenance timer setting. Setting "0" in **Pr.503 Maintenance timer 1**, **Pr.686 Maintenance timer 2**, and **Pr.688 Maintenance timer 3** clears the indication.			

*1 MT appears for all of MT1, MT2 and MT3.

上正科技有限公司
購買、維修 此手冊零組件
電話： 037-466333
Email: service@repairtw.com
Line id: @zzzz
www.repairtw.com

Operation panel indication	UF	UF	FR-PU07	—
Name	USB host error			
Description	Appears when an excessive current flows into the USB A connector.			
Check point	Check if a USB device other than a USB memory device is connected to the USB A connector.			
Corrective action	• If a device other than a USB memory device is connected to the USB A connector, remove the device. • Setting **Pr.1049 USB host reset** = "1" or inverter reset clears the UF indication.			

Operation panel indication	HP1 to HP3	HP 1 to HP3	FR-PU07	—
Name	Home position return error			
Description	Appears when an error occurs during the home position return operation under position control. For the details, refer to page 237.			
Check point	Identify the cause of the error occurrence.			
Corrective action	Check the parameter setting, and check that the input signal is correct.			

Operation panel indication	EV	EV	FR-PU07	—
Name	24 V external power supply operation			
Description	Flickers when the main circuit power supply is off and the 24 V external power supply is being input.			
Check point	• Power is supplied from a 24 V external power supply.			
Corrective action	• Turning ON the power supply (main circuit) of the inverter clears the indication. • If the indication is still displayed after turning ON of the power supply (main circuit) of the inverter, the power supply voltage may be low, or the jumper between the terminals P/+ and P1 may be disconnected.			

(3) Alarm

Output is not shut off when a protective function activates. An alarm can also be output with a parameter setting. (Set "98" in **Pr.190 to Pr.196 (output terminal function selection).** (Refer to page 370.)

Operation panel indication	FN	FN	FR-PU07	FN
Name	Fan alarm			
Description	For the inverter that contains a cooling fan, FN appears on the operation panel when the cooling fan stops due to a fault, low rotation speed or different operation from the setting of **Pr.244 Cooling fan operation selection**.			
Check point	Check the cooling fan for a failure.			
Corrective action	The fan may be faulty. Please contact your sales representative.			

Operation panel indication	FN2	FN2	FR-PU07	FN2
Name	Internal-circulation fan alarm (IP55 compatible models only)			
Description	FN2 appears on the operation panel when the internal air circulation fan stops due to a fault or low rotation speed.			
Check point	Check the internal air circulation fan for a failure.			
Corrective action	The fan may be faulty. Please contact your sales representative.			

(4) Fault

When a protective function activates, the inverter trips and a fault signal is output.

Operation panel indication	E.OC1	E. OC 1	FR-PU07	OC During Acc
Name	Overcurrent trip during acceleration			
Description	When the inverter output current reaches or exceeds approximately 235%*1 of the rated current during acceleration, the protection circuit is activated and the inverter trips.			
Check point	• Check for sudden speed acceleration. • Check if the downward acceleration time is too long in a lift application. • Check for output short-circuit. • Check that the **Pr.3 Base frequency** setting is not 60 Hz when the motor rated frequency is 50 Hz. • Check if the stall prevention operation level is set too high. Check if the fast-response current limit operation is disabled. • Check that the regenerative driving is not performed frequently. (Check if the output voltage becomes larger than the V/F reference voltage at regenerative driving and overcurrent occurs due to increase in the motor current.) • Check that the power supply for RS-485 terminal is not shorted (under vector control). • Check that the encoder wiring and the specifications (encoder power supply, resolution, differential/ complementary) are correct. Check also that the motor wiring (U, V, W) is correct (under vector control). • Check that the rotation direction is not switched from forward to reverse rotation (or from reverse to forward) during torque control under Real sensorless vector control. • Check that the inverter capacity matches with the motor capacity. (PM sensorless vector control) • Check if a start command is given to the inverter while the motor is coasting. (PM sensorless vector control)			
Corrective action	• Set the acceleration time longer. (Shorten the downward acceleration time of the lift.) • If "E.OC1" always appears at start, disconnect the motor once and restart the inverter. If "E.OC1" still appears, contact your sales representative. • Check the wiring to make sure that output short circuit does not occur. • Set 50 Hz in **Pr.3 Base frequency**. (Refer to page 578.) • Lower the stall prevention operation level. Activate the fast-response current limit operation. (Refer to page 336.) • Set the base voltage (rated voltage of the motor, etc.) in **Pr.19 Base frequency voltage**. (Refer to page 578.) • Check RS-485 terminal connection (under vector control). • Check the wiring and specifications of the encoder and the motor. Perform the setting according to the specifications of the encoder and the motor (under vector control). (Refer to page 62.) • Prevent the motor from switching the rotation direction from forward to reverse (or from reverse to forward) during torque control under Real sensorless vector control. • Choose inverter and motor capacities that match. (PM sensorless vector control) • Input a start command after the motor stops. Alternatively, use the automatic restart after instantaneous power failure/flying start function. (Refer to page 517.) (IPM sensorless vector control)			

*1 Differs according to ratings. The rating can be changed using **Pr.570 Multiple rating setting**. (Refer to page 258.)
148% for SLD rating,170% for LD rating, 235% for ND rating (initial setting), and 280% for HD rating

昌鼎工業股份有限公司 機器人維修 電子備零組件 電話：037-466333 Email: service@ipsautomation.com www.repairtw.com

Causes and corrective actions

Operation panel indication	E.OC2	E. OC2	FR-PU07	Stedy Spd OC
Name	Overcurrent trip during constant speed			
Description	When the inverter output current reaches or exceeds approximately 235%*2 of the rated current during constant-speed operation, the protection circuit is activated and the inverter trips.			
Check point	• Check for sudden load change. • Check for output short-circuit. • Check if the stall prevention operation level is set too high. Check if the fast-response current limit operation is disabled. • Check that the power supply for RS-485 terminal is not shorted (under vector control). • Check that the rotation direction is not switched from forward to reverse rotation (or from reverse to forward) during torque control under Real sensorless vector control. • Check that the inverter capacity matches with the motor capacity. (PM sensorless vector control) • Check if a start command is given to the inverter while the motor is coasting. (PM sensorless vector control)			
Corrective action	• Keep the load stable. • Check the wiring to make sure that output short circuit does not occur. • Lower the stall prevention operation level. Activate the fast-response current limit operation. (Refer to page 336.) • Check RS-485 terminal connection (under vector control). • Prevent the motor from switching the rotation direction from forward to reverse (or from reverse to forward) during torque control under Real sensorless vector control. • Choose inverter and motor capacities that match. (PM sensorless vector control) • Input a start command after the motor stops. Alternatively, use the automatic restart after instantaneous power failure/flying start function. (Refer to page 517.) (PM sensorless vector control)			

*2 Differs according to ratings. The rating can be changed using **Pr.570 Multiple rating setting**. (Refer to page 258.)
148% for SLD rating,170% for LD rating, 235% for ND rating (initial setting), and 280% for HD rating

上正科技有限公司
購買、維修 此手冊零組件
電話：037-466333
Email: service@repairtw.com
Line id: @zzzz
www.repairtw.com

Operation panel indication	E.OC3	E. OC3	FR-PU07	OC During Dec
Name	Overcurrent trip during deceleration or stop			
Description	When the inverter output current reaches or exceeds approximately 235%*3 of the rated current during deceleration (other than acceleration or constant speed), the protection circuit is activated and the inverter trips.			
Check point	• Check for sudden speed reduction. • Check for output short-circuit. • Check for too fast operation of the motor's mechanical brake. • Check if the stall prevention operation level is set too high. Check if the fast-response current limit operation is disabled. • Check that the power supply for RS-485 terminal is not shorted (under vector control). • Check that the rotation direction is not switched from forward to reverse rotation (or from reverse to forward) during torque control under Real sensorless vector control. • Check that the inverter capacity matches with the motor capacity. (PM sensorless vector control) • Check if a start command is given to the inverter while the motor is coasting. (PM sensorless vector control)			
Corrective action	• Set the deceleration time longer. • Check the wiring to make sure that output short circuit does not occur. • Check the mechanical brake operation. • Lower the stall prevention operation level. Activate the fast-response current limit operation. (Refer to page 336.) • Check RS-485 terminal connection (under vector control). • Prevent the motor from switching the rotation direction from forward to reverse (or from reverse to forward) during torque control under Real sensorless vector control. • Choose inverter and motor capacities that match. (PM sensorless vector control) • Input a start command after the motor stops. Alternatively, use the automatic restart after instantaneous power failure/flying start function. (Refer to page 517.) (PM sensorless vector control)			

*3 Differs according to ratings. The rating can be changed using **Pr.570 Multiple rating setting**. (Refer to page 258.)
148% for SLD rating,170% for LD rating, 235% for ND rating (initial setting), and 280% for HD rating

Operation panel indication	E.OV1	E. OV 1	FR-PU07	OV During Acc
Name	Regenerative overvoltage trip during acceleration			
Description	If regenerative power causes the inverter's internal main circuit DC voltage to reach or exceed the specified value, the protection circuit is activated to stop the inverter output. The circuit may also be activated by a surge voltage produced in the power supply system.			
Check point	• Check for too slow acceleration. (e.g. during downward acceleration in vertical lift load) • Check that the **Pr.22 Stall prevention operation level** is not set to the no load current or lower. • Check if the stall prevention operation is frequently activated in an application with a large load inertia.			
Corrective action	• Set the acceleration time shorter. Use the regeneration avoidance function **(Pr.882 to Pr.886)**. (Refer to page 599.) • Set a value larger than the no load current in **Pr.22**. • Set **Pr.154 Voltage reduction selection during stall prevention operation** = "10, 11". (Refer to page 336.)			

Operation panel indication	E.OV2	E. OV 2	FR-PU07	Stedy Spd OV
Name	Regenerative overvoltage trip during constant speed			
Description	If regenerative power causes the inverter's internal main circuit DC voltage to reach or exceed the specified value, the protection circuit is activated to stop the inverter output. The circuit may also be activated by a surge voltage produced in the power supply system.			
Check point	• Check for sudden load change. • Check that the **Pr.22 Stall prevention operation level** is not set to the no load current or lower. • Check if the stall prevention operation is frequently activated in an application with a large load inertia. • Check that acceleration/deceleration time is not too short.			
Corrective action	• Keep the load stable. • Use the regeneration avoidance function **(Pr.882 to Pr.886)**. (Refer to page 599.) • Use the brake unit or power regeneration common converter (FR-CV) as required. • Set a value larger than the no load current in **Pr.22**. • Set **Pr.154 Voltage reduction selection during stall prevention operation** = "10, 11". (Refer to page 336.) • Set the acceleration/deceleration time longer. (Under vector control or Advanced magnetic flux vector control, the output torque can be increased. However, sudden acceleration may cause an overshoot in speed, resulting in an occurrence of overvoltage.)			

上正科技有限公司
購買、維修 此手冊零組件
電話： 037-466333
Email: service@repairtw.com
Line id: @zzzz
www.repairtw.com

Operation panel indication	E.OV3	E. OV 3	FR-PU07	OV During Dec
Name	Regenerative overvoltage trip during deceleration or stop			
Description	If regenerative power causes the inverter's internal main circuit DC voltage to reach or exceed the specified value, the protection circuit is activated to stop the inverter output. The circuit may also be activated by a surge voltage produced in the power supply system.			
Check point	• Check for sudden speed reduction. • Check if the stall prevention operation is frequently activated in an application with a large load inertia.			
Corrective action	• Set the deceleration time longer. (Set the deceleration time which matches the moment of inertia of the load.) • Make the brake cycle longer. • Use the regeneration avoidance function **(Pr.882 to Pr.886)**. (Refer to page 599.) • Use the brake unit or power regeneration common converter (FR-CV) as required. • Set **Pr.154 Voltage reduction selection during stall prevention operation** = "10, 11". (Refer to page 336.)			

Causes and corrective actions



Operation panel indication	E.THT	E. THT	FR-PU07	Inv. Overload
Name	Inverter overload trip*4			
Description	When the temperature of the output transistor element exceeds the protection level while a current flows at the rated output current level or higher without causing an overcurrent trip (E.OC[]), the inverter output is stopped.(Permissible overload capacity 150% 60 s)			
Check point	• Check that acceleration/deceleration time is not too short. • Check that torque boost setting is not too large (small). • Check that load pattern selection setting is appropriate for the load pattern of the using machine. • Check the motor for the use under overload. • Check that the encoder wiring and the specifications (encoder power supply, resolution, differential/ complementary) are correct. Check also that the motor wiring (U, V, W) is correct (under vector control).			
Corrective action	• Set the acceleration/deceleration time longer. • Adjust the torque boost setting. • Set the load pattern selection setting according to the load pattern of the using machine. • Reduce the load. • Check the wiring and specifications of the encoder and the motor. Perform the setting according to the specifications of the encoder and the motor (under vector control). (Refer to page 62.)			

*4 Resetting the inverter initializes the internal cumulative heat value of the electronic thermal O/L relay function.



Operation panel indication	E.THM	E. THM	FR-PU07	Motor Ovrload
Name	Motor overload trip*5			
Description	The electronic thermal O/L relay function in the inverter detects motor overheat, which is caused by overload or reduced cooling capability during low-speed operation. When the cumulative heat value reaches 85% of the **Pr.9 Electronic thermal O/L relay** setting, pre-alarm (TH) is output. When the accumulated value reaches the specified value, the protection circuit is activated to stop the inverter output.			
Check point	• Check the motor for the use under overload. • Check that the setting of **Pr.71 Applied motor** for motor selection is correct. (Refer to page 424.) • Check that the stall prevention operation setting is correct.			
Corrective action	• Reduce the load. • For a constant-torque motor, set the constant-torque motor in **Pr.71**. • Set the stall prevention operation level accordingly. (Refer to page 336.)			

*5 Resetting the inverter initializes the internal cumulative heat value of the electronic thermal O/L relay function.

上正科技有限公司
購買、維修 此手冊零組件
電話： 037-466333
Email: service@repairtw.com
Line id: @zzzz
www.repairtw.com



Operation panel indication	E.FIN	E. FIN	FR-PU07	H/Sink O/Temp
Name	Heatsink overheat			
Description	When the heatsink overheats, the temperature sensor activates, and the inverter output is stopped. The FIN signal can be output when the temperature becomes approximately 85% of the heatsink overheat protection operation temperature. For the terminal used for the FIN signal output, assign the function by setting "26 (positive logic) or 126 (negative logic)" from **Pr.190 to Pr.196 (output terminal function selection)**. (Refer to page 370.)			
Check point	• Check for too high surrounding air temperature. • Check for heatsink clogging. • Check that the cooling fan is not stopped. (Check that FN is not displayed on the operation panel.)			
Corrective action	• Set the surrounding air temperature to within the specifications. • Clean the heatsink. • Replace the cooling fan.			

Operation panel indication	E.IPF	E. IPF	FR-PU07	Inst. Pwr. Loss
Name	Instantaneous power failure			
Description	If a power failure occurs for longer than 15 ms*6 (this also applies to inverter input shut-off), the instantaneous power failure protective function is activated to trip the inverter in order to prevent the control circuit from malfunctioning. If a power failure persists for 100 ms or longer, the fault warning output is not provided, and the inverter restarts if the start signal is ON upon power restoration. (The inverter continues operating if an instantaneous power failure is within 15 ms*6.) In some operating status (load magnitude, acceleration/deceleration time setting, etc.), overcurrent or other protection may be activated upon power restoration. When instantaneous power failure protection is activated, the IPF signal is output. (Refer to **page 511**, **page 517**.)			
Check point	Find the cause of instantaneous power failure occurrence.			
Corrective action	• Remedy the instantaneous power failure. • Prepare a backup power supply for instantaneous power failure. • Set the function of automatic restart after instantaneous power failure **(Pr. 57)**. (Refer to **page 511**, **page 517**.)			

*6 10 ms for IP55 compatible models

Operation panel indication	E.UVT	E. UVT	FR-PU07	Under Voltage
Name	Undervoltage			
Description	If the power supply voltage of the inverter decreases, the control circuit will not perform normal functions. In addition, the motor torque will be insufficient and/or heat generation will increase. To prevent this, if the power supply voltage decreases to about 150 VAC (300 VAC for the 400 V class) or below, this function shuts off the inverter output. When a jumper is not connected across P/+ and P1, the undervoltage protective function is activated. When undervoltage protection is activated, the IPF signal is output. (Refer to **page 511**, **page 517**.)			
Check point	• Check if a high-capacity motor is driven. • Check if the jumper is connected across terminals P/+ and P1.			
Corrective action	• Check the power supply system equipment such as the power supply. • Do not remove the jumper across terminals P/+ and P1 except when connecting a DC reactor. • If the problem still persists after taking the above measure, contact your sales representative.			

上正科技有限公司
購買、維修 此手冊零組件
電話： 037-466333
Email: service@repairtw.com
Line id: @zzzz
www.repairtw.com

Operation panel indication	E.ILF	E. ILF	FR-PU07	Input phase loss
Name	Input phase loss			
Description	When **Pr.872 Input phase loss protection selection** is enabled ("1") and one of the three-phase power input is lost, the inverter output is shut off. This protective function is not available when **Pr.872** is set to the initial value (**Pr.872** = "0").(Refer to **page 331**)			
Check point	Check for a break in the cable for the three-phase power supply input.			
Corrective action	• Wire the cables properly. • Repair a break portion in the cable.			

6

Operation panel indication	E.OLT	E. OLT	FR-PU07	Stll Prev STP
Name	Stall prevention stop			
Description	V/F Magnetic flux If the output frequency has fallen to 0.5 Hz by stall prevention operation and remains for 3 s, a fault (E.OLT) appears and the inverter trips. OL appears while stall prevention is being activated.			
	Sensorless Vector PM When speed control is performed, a fault (E.OLT) appears and the inverter trips if frequency drops to the **Pr.865 Low speed detection** (initial value is 1.5 Hz) setting by torque limit operation and the output torque exceeds the **Pr.874 OLT level setting** (initial value is 150%) setting and remains 3 s.			
Check point	• Check the motor for the use under overload. • Check that the **Pr.865** and **Pr.874** values are correct. (Check the **Pr.22 Stall prevention operation level** setting under V/F control and Advanced magnetic flux vector control.) • Check if a motor is connected under PM sensorless vector control.			
Corrective action	• Reduce the load. • Change the **Pr.22**, **Pr.865**, and **Pr.874** values. (Check the **Pr.22** setting under V/F control and Advanced magnetic flux vector control.) • For a test run without connecting a motor, select the PM sensorless vector control test operation.(Refer to page 162.) • Also check that the stall prevention (overcurrent) warning (OL) or the stall prevention (overvoltage) warning (oL) countermeasure is taken.			

Operation panel indication	E.SOT PM	E. SOT	FR-PU07	Motor step out
Name	Loss of synchronism detection			
Description	The inverter trips when the motor operation is not synchronized. (This function is only available under PM sensorless vector control.)			
Check point	• Check that the PM motor is not driven overloaded. • Check if a start command is given to the inverter while the PM motor is coasting. • Check if a motor is connected under PM sensorless vector control. • Check if a PM motor other than the MM-CF series is driven.			
Corrective action	• Set the acceleration time longer. • Reduce the load. • If the inverter restarts during coasting, set **Pr.57 Restart coasting time** ≠ "9999", and select the automatic restart after instantaneous power failure. • Check the connection of the IPM motor. • For a test run without connecting a motor, select the PM sensorless vector control test operation.(Refer to page 162.) • Drive an IPM motor (MM-CF series) • When driving an IPM motor other than MM-CF series, offline auto tuning must be performed. (Refer to page 438.)			

上正科技有限公司
購買、維修 此手冊零組件
電話： 037-466333
Email: service@repairtw.com
Line id: @zzzz
www.repairtw.com

Operation panel indication	E.BE	E. bE	FR-PU07	Br.Cct.Fault
Name	Brake transistor alarm detection			
Description	• The inverter trips if a fault due to damage of the brake transistor and such occurs in the brake circuit. In such a case, the power supply to the inverter must be shut off immediately. • Appears when an internal circuit fault occurred for IP55 compatible models.			
Check point	• Reduce the load inertia. • Check that the brake duty is proper.			
Corrective action	Replace the inverter.			

Operation panel indication	E.GF	E. GF	FR-PU07	Ground Fault
Name	Output side earth (ground) fault overcurrent			
Description	The inverter trips if an earth (ground) fault overcurrent flows due to an earth (ground) fault that occurred on the inverter's output side (load side).			
Check point	Check for an earth (ground) fault in the motor and connection cable.			
Corrective action	Remedy the earth (ground) fault portion.			

Operation panel indication	E.LF	E. LF	FR-PU07	E.LF
Name	Output phase loss			
Description	The inverter trips if one of the three phases (U, V, W) on the inverter's output side (load side) is lost.			
Check point	• Check the wiring. (Check that the motor is normally operating.) • Check that the capacity of the motor used is not smaller than that of the inverter. • Check if a start command is given to the inverter while the motor is coasting. (PM sensorless vector control)			
Corrective action	• Wire the cables properly. • Input a start command after the motor stops. Alternatively, use the automatic restart after instantaneous power failure/flying start function (page 517). (PM sensorless vector control)			

Operation panel indication	E.OHT	E. OHT	FR-PU07	OH Fault
Name	External thermal relay operation			
Description	The inverter trips if the external thermal relay provided for motor overheat protection or the internally mounted thermal relay in the motor, etc. switches ON (contacts open). This function is available when "7" (OH signal) is set in any of **Pr.178 to Pr.189 (input terminal function selection)**. This protective function is not available in the initial status. (OH signal is not assigned.)			
Check point	• Check for motor overheating. • Check that the value "7" (OH signal) is set correctly to any of **Pr.178 to Pr.189 (input terminal function selection)**.			
Corrective action	• Reduce the load and operation duty. • Even if the relay contacts are reset automatically, the inverter will not restart unless it is reset.			

Operation panel indication	E.PTC	E. PTC	FR-PU07	PTC activated
Name	PTC thermistor operation			
Description	The inverter trips if resistance of the PTC thermistor connected between the terminal 2 and terminal 10 has reached the **Pr.561 PTC thermistor protection level** setting or higher. When the initial value (**Pr.561** = "9999") is set, this protective function is not available.			
Check point	• Check the connection with the PTC thermistor. • Check the **Pr.561** setting. • Check the motor for operation under overload.			
Corrective action	Reduce the load.			

Email: service@repairtw.com
Line id: @zzzz
www.repairtw.com

Operation panel indication	E.OPT	E. OPT	FR-PU07	Option Fault
Name	Option fault			
Description	• Appears when the AC power supply is connected to the terminal R/L1, S/L2, or T/L3 accidentally when a high power factor converter (FR-HC2) or power regeneration common converter (FR-CV) is connected (when **Pr.30 Regenerative function selection** = "2"). • Appears when torque command by the plug-in option is selected using **Pr.804 Torque command source selection** and no plug-in option is mounted. This function is available under torque control. • Appears when the switch for manufacturer setting of the plug-in option is changed. • Appears when a communication option is connected while **Pr.296 Password lock level** = "0 or 100".			
Check point	• Check that the AC power supply is not connected to the terminal R/L1, S/L2, or T/L3 when a high power factor converter (FR-HC2) or power regeneration common converter (FR-CV) is connected (when **Pr.30** = "2"). • Check that the plug-in option for torque command setting is connected. • Check for the password lock with a setting of **Pr.296** = "0, 100".			
Corrective action	• Check the **Pr.30** setting and wiring. • The inverter may be damaged if the AC power supply is connected to the terminal R/L1, S/L2, or T/L3 when a high power factor converter is connected. Please contact your sales representative. • Check for connection of the plug-in option. Check the **Pr.804** setting. • Set the switch on the plug-in option, which is for manufacturer setting, back to the initial setting. (Refer to the Instruction Manual of each option.) • To apply the password lock when installing a communication option, set **Pr.296** ≠ "0, 100". (Refer to page 262.)			

Operation panel indication	E.OP1	E. OP1	FR-PU07	Option1 Fault
Name	Communication option fault			
Description	The inverter trips if a communication line error occurs in the communication option.			
Check point	• Check for an incorrect option function setting and operation. • Check that the plug-in option is plugged into the connector properly. • Check for a break in the communication cable. • Check that the terminating resistor is fitted properly.			
Corrective action	• Check the option function setting, etc. • Connect the plug-in option securely. • Check the connection of communication cable.			

工正科技有限公司
購買、維修 此手冊零組件
電話： 037-466333
Email: service@repairtw.com
Line id: @zzzz
www.repairtw.com

Operation panel indication	E.16 to E.20	E. 16 to E. 20	FR-PU07	—
Name	User definition error by the PLC function			
Description	The protective function is activated by setting "16 to 20" in the special register SD1214 for the PLC function. The inverter trips when the protective function is activated. The protective function is activated when the PLC function is enabled. This protective function is not available in the initial setting (**Pr.414** = "0"). Any character string can be displayed on FR-PU07 by sequence programs.			
Check point	• Check if "16 to 20" is set in the special register SD1214.			
Corrective action	• Set a value other than "16 to 20" in the special register SD1214.			

Operation panel indication	E.PE	E. PE	FR-PU07	Corrupt Memory
Name	Parameter storage device fault (control circuit board)			
Description	The inverter trips if a fault occurs in the parameter stored. (EEPROM failure)			
Check point	Check for too many number of parameter write times.			
Corrective action	Please contact your sales representative. Set "1" in **Pr.342 Communication EEPROM write selection**(write to RAM) for the operation which requires frequent parameter writing via communication, etc. Note that writing to RAM goes back to the initial status at power OFF.			

Operation panel indication	E.PUE	E. PUE	FR-PU07	PU Leave Out
Name	PU disconnection			
Description	• The inverter trips if communication between the inverter and PU is suspended, e.g. the operation panel or parameter unit is disconnected, when the disconnected PU disconnection function is valid in **Pr.75 Reset selection/disconnected PU detection/PU stop selection** . • The inverter trips if communication errors occurred consecutively for more than permissible number of retries when **Pr.121 Number of PU communication retries** ≠ "9999" during the RS-485 communication. • The inverter trips if communication is broken within the period of time set in **Pr.122 PU communication check time interval** during the RS-485 communication via the PU connector.			
Check point	• Check that the operation panel (FR-DU08) or the parameter unit (FR-PU07) is connected properly. • Check the **Pr.75** setting.			
Corrective action	Fit the operation panel (FR-DU08) or the parameter unit (FR-PU07) securely.			

Operation panel indication	E.RET	E. RET	FR-PU07	Retry No Over
Name	Retry count excess			
Description	The inverter trips if the operation cannot be resumed properly within the number of retries set in **Pr.67 Number of retries at fault occurrence**.			
Check point	Find the cause of the fault occurrence.			
Corrective action	Eliminate the cause of the error preceding this error indication.			

Operation panel indication	E.PE2	E. PE2	FR-PU07	PR storage alarm
Name	Parameter storage device faultParameter storage device fault (main circuit board)			
Description	The inverter trips if a fault occurs in the parameter stored. (EEPROM failure)			
Check point				
Corrective action	Please contact your sales representative.			

上誠科技有限公司
購買、維修 此手冊零組件
電話： 037-466333
Email: service@repairtw.com
Line id: @zzzz
www.repairtw.com

Operation panel indication	CPU	E. CPU	FR-PU07	CPU Fault
	E. 5	E. 5		Fault 5
	E. 6	E. 6		Fault 6
	E. 7	E. 7		Fault 7
Name	CPU fault			
Description	The inverter trips if the communication fault of the built-in CPU occurs.			
Check point	Check for devices producing excess electrical noises around the inverter.			
Corrective action	• Take measures against noises if there are devices producing excess electrical noises around the inverter. • Please contact your sales representative.			

Operation panel indication	E.CTE	E. CTE	FR-PU07	E.CTE
Name	Operation panel power supply short circuit RS-485 terminals power supply short circuit			
Description	• When the power supply for the operation panel (PU connector) is shorted, the power output is shutoff and the inverter trips. The use of the operation panel (parameter unit) and the RS-485 communication via the PU connector are disabled. To reset, enter the RES signal from the terminal, reset via communication through the RS-485 terminals, or switch power OFF then ON again. • When the power supply for the RS-485 terminals are short circuited, this function shuts off the power output. At this time, communication from the RS-485 terminals cannot be made. To reset, use STOP RESET of the operation panel, enter the RES signal, or switch power OFF then ON again.			
Check point	• Check that the PU connector cable is not shorted. • Check that the RS-485 terminals are connected correctly.			
Corrective action	• Check PU and the cable. • Check the connection of the RS-485 terminals.			

Causes and corrective actions

Operation panel indication	E.P24	E. P24	FR-PU07	E.P24
Name	24 VDC power fault			
Description	When the 24 VDC power output from the PC terminal is shorted, this function shuts off the power output. At this time, all external contact inputs switch OFF. The inverter cannot be reset by entering the RES signal. To reset it, use the operation panel, or switch power OFF, then ON again.			
Check point	• Check for a short circuit in the PC terminal output. • Check that the 24 V external power supply voltage is correct.			
Corrective action	• Repair the short-circuited portion. • Supply the power at 24 V. (If the power at insufficient voltage is supplied to the 24V input circuit for a long time, the inverter internal circuit may heat up. Input power at correct voltage although it will not damage the inverter.)			

Operation panel indication	E.CDO	E. CdO	FR-PU07	OC detect level
Name	Abnormal output current detection			
Description	The inverter trips if the output current exceeds the **Pr.150 Output current detection level** setting. This functions is available when **Pr.167 Output current detection operation selection** is set to "1". When the initial value (**Pr.167** = "0") is set, this protective function is not available.			
Check point	Check the settings of **Pr.150, Pr.151 Output current detection signal delay time, Pr.166 Output current detection signal retention time, and Pr.167**. (Refer to page 381.)			

Operation panel indication	E.IOH	E. IOH	FR-PU07	Inrush overheat
Name	Inrush current limit circuit fault			
Description	The inverter trips when the resistor of the inrush current limit circuit is overheated. The inrush current limit circuit failure			
Check point	• Check that frequent power ON/OFF is not repeated. • Check if the input side fuse (5A) in the power supply circuit of the inrush current limit circuit contactor (FR-A840-03250(110K) or higher) is blown. • Check that the power supply circuit of inrush current limit circuit contactor is not damaged.			
Corrective action	Configure a circuit where frequent power ON/OFF is not repeated. If the situation does not improve after taking the above measure, please contact your sales representative.			

上正科技有限公司
購買、維修 此手冊零組件
電話： 037-466333
Email: service@repairtw.com
Line id: @zzzz
www.repairtw.com

Operation panel indication	E.SER	E. SER	FR-PU07	VFD Comm error
Name	Communication fault (inverter)			
Description	The inverter trips when communication error occurs consecutively for the permissible number of retries or more when **Pr.335 RS-485 communication retry count** ≠ "9999" during RS-485 communication from the RS-485 terminals. The inverter also trips if communication is broken for the period of time set in **Pr.336 RS-485 communication check time interval**.			
Check point	Check the RS-485 terminal wiring.			
Corrective action	Perform wiring of the RS-485 terminals properly.			

Operation panel indication	E.AIE	E. AIE	FR-PU07	Analog in error
Name	Analog input fault			
Description	The inverter trips when a 30 mA or higher current or a 7.5 V or higher voltage is input to terminal 2 while the current input is selected by **Pr.73 Analog input selection**, or to terminal 4 while the current input is selected by **Pr.267 Terminal 4 input selection**.			
Check point	Check the **Pr.73**, **Pr.267**, and the voltage/current input switch settings.(Refer to page 391)			
Corrective action	Either give a current less than 30 mA, or set **Pr.73**, **Pr.267**, and the voltage/current input switch to the voltage input and input a voltage.			

Operation panel indication	E.USB	E. USb	FR-PU07	USB comm error
Name	USB communication fault			
Description	The inverter trips when the communication is cut off for the time set in **Pr.548 USB communication check time interval**.			
Check point	• Check that the USB communication cable is connected securely.			
Corrective action	• Check the **Pr.548** setting. • Connect the USB communication cable securely. • Increase the **Pr.548** setting or set "9999." (Refer to page 574.)			

Operation panel indication	E.SAF	E. SAF	FR-PU07	E.SAF Fault
Name	Safety circuit fault			
Description	• The inverter trips when a safety circuit fault occurs. • The inverter trips if the either of the wire between S1 and SIC or S2 and SIC becomes non-conductive while using the safety stop function. • When not using the safety stop function, the inverter trips when the shorting wire between terminals S1 and PC or across S2 and PC is disconnected.			
Check point	• Check that the safety relay module or the connection has no fault when using the safety stop function. • Check if the shorting wire between S1 and PC or between S2 and PC is disconnected when not using the safety stop function.			
Corrective action	• When using the safety stop function, check that wiring of terminal S1, S2 and SIC is correct and the safety stop input signal source such as a safety relay module is operating properly. Refer to the Safety stop function instruction manual for causes and countermeasures. (Please contact your sales representative for the manual.) • When not using the safety stop function, short across terminals S1 and PC and across S2 and PC with shorting wires. (Refer to page 57.)			

上正科技有限公司
購買、維修 此手冊零組件
電話: 037-466333
Email: service@repairtw.com
Line id: @zzzz
www.repairtw.com

Operation panel indication	E.PBT	E. PbT	FR-PU07	Fault
	E.13	E. 13		Fault 13
Name	Opposite rotation deceleration fault			
Description	The inverter trips when an internal circuit fault occurs.			
Corrective action	Please contact your sales representative.			

Operation panel indication	E.OS	E. OS	FR-PU07	E.OS
Name	Overspeed occurrence			
Description	The inverter trips when the motor speed exceeds the **Pr.374 Overspeed detection level** under encoder feedback control, Real sensorless vector control, vector control, and PM sensorless vector control. This protective function is not available in the initial status.			
Check point	• Check that the **Pr.374** setting is correct. • Check that the number of encoder pulses does not differ from the actual number of **Pr 369 Number of encoder pulses** (under encoder feedback control or vector control).			
Corrective action	• Set the **Pr.374** correctly. • Set the **Pr 369** correctly (under encoder feedback control or vector control).			

Operation panel indication	E.OSD Vector	E. OSd	FR-PU07	E.OSd
Name	Speed deviation excess detection			
Description	• The inverter trips if the motor speed is increased or decreased under the influence of the load etc. during vector control with **Pr.285 Speed deviation excess detection frequency** set and cannot be controlled in accordance with the speed command value. • While deceleration stop is attempted, if the motor is accelerated against the stop command accidentally by the incorrect setting of the number of encoder pulses, etc., the deceleration check function (**Pr.690**) is activated to stop the inverter output.			
Check point	• Check that the values of **Pr.285 and Pr.853 Speed deviation time** are correct. • Check for sudden load change. • Check that the number of encoder pulses does not differ from the actual number of **Pr.369 Number of encoder pulses**.			
Corrective action	• Set **Pr.285 and Pr.853** correctly. • Keep the load stable. • Set **Pr.369** correctly.			

Operation panel indication	E.ECT	E. ECT	FR-PU07	E.ECT
Name	Signal loss detection			
Description	The inverter trips when the encoder signal is shut off under orientation control, encoder feedback control or vector control. This protective function is not available in the initial status.			
Check point	• Check for the encoder signal loss. • Check that the encoder specifications are correct. • Check for a loose connector. • Check that the switch setting of FR-A8AP (option) is correct. • Check that the power is supplied to the encoder. Alternatively, check that the power is not supplied to the encoder later than the inverter. • Check that the voltage of the power supplied to the encoder is the same as the encoder output voltage.			
Corrective action	• Remedy the signal loss. • Use an encoder that meets the specifications. • Make connection securely. • Make a switch setting of FR-A8AP (option) correctly. (Refer to page 63.) • Supply the power to the encoder. Or supply the power to the encoder at the same time when the power is supplied to the inverter. If the power is supplied to the encoder after sent to the inverter, check that the encoder signal is properly sent and set "0 (initial value)" in **Pr.376 Encoder signal loss detection enable/disable selection** to disable signal loss detection. • Make the voltage of the power supplied to the encoder the same as the encoder output voltage.			

工正科技有限公司
購買 維修 此手冊零組件
電話： 037-466333
Email: service@repairtw.com
Line id: @zzzz
www.repairtw.com

Operation panel indication	E.OD Vector	E. Od	FR-PU07	E.Od
Name	Excessive position fault			
Description	The inverter trips when the difference between the position command and position feedback exceeds **Pr.427 Excessive level error** under position control.			
Check point	• Check that the position detecting encoder mounting orientation matches the parameter. • Check that the load is not large. • Check that the **Pr.427, Pr.369 Number of encoder pulses** settings are correct.			
Corrective action	• Check the parameters. • Reduce the load. • Set **Pr.427, Pr.369** correctly.			

Operation panel indication	E.MB1 to 7	E. Mb 1 to E. Mb 7	FR-PU07	E.MB1 Fault to E.MB7 Fault
Name	Brake sequence fault			
Description	• The inverter trips when a sequence error occurs during use of the brake sequence function **(Pr.278 to Pr.285)**. This protective function is not available in the initial status. (The brake sequence function is invalid.) (For the details of fault record, refer to page 457.)			
Check point	Find the cause of the fault occurrence.			
Corrective action	Check the set parameters and perform wiring properly.			

Operation panel indication	E.EP Vector	E. EP	FR-PU07	E.EP
Name	Encoder phase fault			
Description	The inverter trips when the rotation command of the inverter differs from the actual motor rotation direction detected from the encoder during offline auto tuning. This protective function is not available in the initial status.			
Check point	• Check for mis-wiring of the encoder cable. • Check if the **Pr.359 Encoder rotation direction** setting is incorrect.			
Corrective action	• Perform connection and wiring securely. • Change the **Pr.359** setting.			

Operation panel indication	E.IAH	E. 1 AH	FR-PU07	Fault
Name	Abnormal internal temperature (IP55 compatible models only)			
Description	The inverter trips when the inverter internal temperature reaches the specified value or higher.			
Check point	• Check for too high surrounding air temperature. • Check if the internal air circulation fan or the cooling fan stops due to a fault.			
Corrective action	• Install an inverter suitable for the installation environment. (Refer to the Instruction Manual (Hardware) of the FR-A806.) • Replace the internal air circulation fan or the cooling fan.			

購買、維修 此卡服務中心
電話： 037-466333
Email: service@repairtw.com
Line id: @zzzz
www.repairtw.com

Operation panel indication	E.LCI	E. LCI	FR-PU07	Fault
Name	4 mA input fault			
Description	The inverter trips when the analog input current is 2 mA or less for the time set in **Pr.778 Current input check filter**. This function is available when **Pr.573 4 mA input check selection** = "2 or 3". (Refer to page 412.) This function is not available in the initial status.			
Check point	• Check for a break in the wiring for the analog current input. • Check that the **Pr.778** setting is not too short.			
Corrective action	• Check the wiring for the analog current input. • Set the **Pr.778** setting larger.			

Operation panel indication	E.PCH	E. PCH	FR-PU07	Fault
Name	Pre-charge fault			
Description	• The inverter trips when the pre-charge time exceeds **Pr.764 Pre-charge time limit**. • The inverter trips when the measured value exceeds **Pr.763 Pre-charge upper detection level** during pre-charging. • This function is available when **Pr.764 and Pr.763** are set. This protective function is not available in the initial status.			
Check point	• Check that the **Pr.764** setting is not too short. • Check that the **Pr.763** setting is not too small. • Check that the **Pr.127 PID control automatic switchover frequency** setting is not too low. • Check for a break in the connection to the pump.			
Corrective action	• Set the **Pr.764** setting longer. • Set the **Pr.763** setting larger. • Set the **Pr.127** setting higher. • Check the connection to the pump.			

Causes and corrective actions

Operation panel indication	E.PID		FR-PU07	Fault PID Signal Error
Name	PID signal fault			
Description	The inverter trips if the measured value exceeds the PID upper limit or PID lower limit parameter setting, or the absolute deviation value exceeds the PID deviation parameter setting during PID control. Set this function in **Pr.131 PID upper limit, Pr.132 PID lower limit, Pr.553 PID deviation limit, and Pr.554 PID signal operation selection**. (Refer to page 483.) This protective function is not available in the initial status.			
Check point	• Check the meter for a failure or break. • Check that the parameter settings are correct.			
Corrective action	• Check that the meter has no failure or break. • Set the parameters correctly.			

Operation panel indication	E. 1 to E. 3	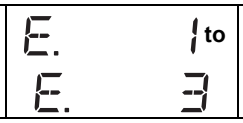	FR-PU07	Fault 1 to Fault 3
Name	Option fault			
Description	The inverter trips when a contact fault is found between the inverter and the plug-in option, or when the communication option is not connected to the connector 1. Appears when the switch for manufacturer setting of the plug-in option is changed.			
Check point	• Check that the plug-in option is plugged into the connector properly. (1 to 3 indicate connector numbers for connection of options.) • Check for excessive noise around the inverter. • Check if the communication option is connected to the connector 2 or 3.			
Corrective action	• Connect the plug-in option securely. • Take measures against noises if there are devices producing excess electrical noises around the inverter. If the situation does not improve after taking the above measure, please contact your sales representative. • Connect the communication option to the connector 1. • Set the switch on the plug-in option, which is for manufacturer setting, back to the initial setting. (Refer to the Instruction Manual of each option.)			

上位科技有限公司
購買、維修此手冊零組件
電話： 037-166333
Email: service@repairtw.com
Line id: @zzzzz
www.repairtw.com

Operation panel indication	E.11 Sensorless		FR-PU07	Fault 11
Name	Opposite rotation deceleration fault			
Description	The speed may not decelerate during low speed operation if the rotation direction of the speed command and the estimated speed differ when the rotation is changing from forward to reverse or from reverse to forward during torque control under Real sensorless vector control. The inverter trips when overload occurs due to the un-switched rotation direction. This protective function is not available in the initial status (V/F control). (This function is only available under Real sensorless vector control.)			
Check point	• Check that the rotation direction is not switched from forward to reverse rotation (or from reverse to forward) during torque control under Real sensorless vector control.			
Corrective action	• Prevent the motor from switching the rotation direction from forward to reverse (or from reverse to forward) during torque control under Real sensorless vector control. • Please contact your sales representative.			

CAUTION

- If protective functions with indication of "Fault" are activated when using the FR-PU07, "ERR" appears in the faults history of FR-PU07.
- If faults other than the above appear, contact your sales representative.

6.6 Check first when you have a trouble

For Real sensorless vector control and vector control, also refer to the troubleshooting on page 194 (speed control), page 221 (torque control), and page 246 (position control).

POINT

- If the cause is still unknown after every check, it is recommended to initialize the parameters, set the required parameter values and check again.

6.6.1 Motor does not start

Check points	Possible cause	Countermeasure	Refer to page
Main Circuit	Appropriate power supply voltage is not applied. (Operation panel display is not provided.)	Power on a molded case circuit breaker (MCCB), an earth leakage circuit breaker (ELB), or a magnetic contactor (MC).	—
		Check for the decreased input voltage, input phase loss, and wiring.	—
		If only the control power is ON when using a separate power source for the control circuit, turn ON the main circuit power.	54
	Motor is not connected properly.	Check the wiring between the inverter and the motor. If the commercial power supply-inverter switchover function is active, check the wiring of the magnetic contactor (MC) between the inverter and the motor.	38
	The jumper across P/+ to P1 is disconnected. A DC reactor (FR-HEL) is not connected.	Securely fit a jumper across P/+ and P1. When using a DC reactor (FR-HEL), remove the jumper across P/+ to P1, and then connect the DC reactor. Connect the DC reactor securely when required according to the capacity.	38, 79
Input signal	Start signal is not input.	Check the start command source, and input a start signal. PU operation mode: FWD / REV External operation mode: STF/STR signal	301
	Both the forward and reverse rotation start signals (STF, STR) are input simultaneously.	Turn ON only one of the forward and reverse rotation start signals (STF or STR). When the STF and STR signals are turned ON simultaneously in the initial setting, a stop command is given.	45
	Frequency command is zero. (FWD or REV LED on the operation panel is flickering.)	Check the frequency command source and enter a frequency command.	301
	AU signal is not ON when terminal 4 is used for frequency setting. (FWD or REV LED on the operation panel is flickering.)	Turn ON the AU signal. Turning ON the AU signal activates terminal 4 input.	391
	Output stop signal (MRS) or reset signal (RES) is ON. (FWD or REV LED on the operation panel is flickering.)	Turn MRS or RES signal OFF. Inverter starts the operation with a given start command and a frequency command after turning OFF MRS or RES signal. Before turning OFF, ensure the safety.	45
	CS signal is OFF while the automatic restart after instantaneous power failure function is selected (**Pr.57 Restart coasting time** ≠ 9999). (FWD or REV LED on the operation panel is flickering.)	Turn ON the automatic restart after instantaneous power failure/flying start (CS) signal. When the CS signal is assigned to an input terminal, automatic restart operation is enabled when the CS signal is turned ON.	511
	Jumper connector of sink - source is incorrectly selected. (FWD or REV LED on the operation panel is flickering.)	Check that the control logic switchover jumper connector is correctly installed. If it is not installed correctly, input signal is not recognized.	49
	Wiring of encoder is incorrect. (Under encoder feedback control or vector control)	Check the wiring of encoder.	65
	Voltage/current input switch is not correctly set for analog input signal (0 to 5 V/0 to 10 V, 4 to 20 mA). (FWD or REV LED on the operation panel is flickering.)	Set **Pr.73 Analog input selection, Pr.267 Terminal 4 input selection**, and a voltage/current input switch correctly, then input an analog signal in accordance with the setting.	391
	STOP RESET was pressed. (Operation panel indication is PS (PS).)	During the External operation mode, check the method of restarting from a STOP RESET input stop from PU.	253, 627
	Two-wire or three-wire type connection is incorrect.	Check the wiring. Use the Start self-holding selection (STOP) signal when the three-wire type is used.	422

上正科技有限公司
購買、維修 此手冊零組件
電話： 037-466333
Email: service@repairtw.com
Line id: @zzzz
www.repairtw.com

Check points	Possible cause	Countermeasure	Refer to page
Parameter Setting	Under V/F control, **Pr.0 Torque boost** setting is improper.	Increase the **Pr.0** setting by 0.5% increments while observing the rotation of a motor. If that makes no difference, decrease the setting.	577
	Pr.78 Reverse rotation prevention selection is set.	Check the **Pr.78** setting. Set **Pr.78** when you want to limit the motor rotation to only one direction.	314
	Pr.79 Operation mode selection setting is incorrect.	Select the operation mode which corresponds with input methods of start command and frequency command.	299
	Bias and gain **(calibration parameter C2 to C7)** settings are improper.	Check the bias and gain **(calibration parameter C2 to C7)** settings.	400
	Pr.13 Starting frequency setting is greater than the running frequency.	Set running frequency higher than **Pr.13**. The inverter does not start if the frequency setting signal is less than the value set in **Pr.13**.	291, 292
	Frequency settings of various running frequency (such as multi-speed operation) are zero. Especially, **Pr.1 Maximum frequency** is zero.	Set the frequency command according to the application. Set **Pr.1** higher than the actual frequency used.	319, 334
	Pr.15 Jog frequency is lower than **Pr.13 Starting frequency** for JOG operation.	Set **Pr.15** higher than **Pr.13**.	291, 292, 318
	The **Pr.359 Encoder rotation direction** setting is incorrect under encoder feedback control or under vector control.	If the "REV" on the operation panel is lit even though the forward-rotation command is given, set **Pr.359** = "1".	68, 603
	Operation mode and a writing device do not correspond.	Check **Pr.79 Operation mode selection, Pr.338 Communication operation command source, Pr.339 Communication speed command source, Pr.550 NET mode operation command source selection** and **Pr.551 PU mode operation command source selection**, and select an operation mode suitable for the purpose.	299, 308
	Start signal operation selection is set by **Pr.250 Stop selection**.	Check the **Pr.250** setting and the connection of STF and STR signals.	422
	The motor has decelerated to a stop when power failure deceleration stop function is selected.	When power is restored, ensure the safety, and turn OFF the start signal once, then turn ON again to restart. When **Pr.261 Power failure stop selection** = "2 or 12", the motor automatically restarts after the power is restored.	523
	Performing auto tuning.	When offline auto tuning ends, press STOP RESET of the operation panel for the PU operation. For the External operation, turn OFF the start signal (STF or STR). This operation resets the offline auto tuning, and the PU's monitor display returns to the normal indication. (Without this operation, next operation cannot be started.)	428, 519
	The automatic restart after instantaneous power failure function or power failure stop function has been activated. (Performing overload operation during input phase loss may cause voltage insufficiency, and that may result in detection of power failure.)	Set **Pr.872 Input phase loss protection selection** ="1" (input phase failure protection active). Disable the automatic restart after instantaneous power failure function and power failure stop function. Reduce the load. Increase the acceleration time if the function was activated during acceleration.	331, 511, 517, 523
	The motor test operation is selected under vector control or PM sensorless vector control.	Check the **Pr.800 Control method selection** setting.	160
Load	Load is too heavy.	Reduce the load.	—
	Shaft is locked.	Inspect the machine (motor).	—

上正科技有限公司
購買、維修此手冊零組件
電話： 037 466333
Email: service@repairtw.com
Line id: @zzzz
www.repairtw.com

6.6.2 Motor or machine is making abnormal acoustic noise

Check points	Possible cause	Countermeasure	Refer to page
Input signal	Disturbance due to EMI when frequency or torque command is given from analog input (terminal 1, 2, 4).	Take countermeasures against EMI.	82
Parameter Setting		Increase the **Pr.74 Input filter time constant** if steady operation cannot be performed due to EMI.	398
Parameter Setting	No carrier frequency noises (metallic noises) are generated.	In the initial setting, **Pr.240 Soft-PWM operation selection** is enabled to change motor noise to an unoffending complex tone. Therefore, no carrier frequency noises (metallic noises) are generated. Set **Pr.240** = "0" to disable this function.	270
	The motor noise increases due to activation of the carrier frequency automatic reduction function when the motor is driven overloaded.	Reduce the load. Disable the automatic reduction function by setting **Pr.260 PWM frequency automatic switchover** = "0".	270
	Resonance occurs. (output frequency)	Set **Pr.31 to Pr.36, Pr.552 (Frequency jump)**. When it is desired to avoid resonance attributable to the natural frequency of a mechanical system, these parameters allow resonant frequencies to be jumped.	335
	Resonance occurs. (carrier frequency)	Change **Pr.72 PWM frequency selection** setting. Changing the PWM carrier frequency produces an effect on avoiding the resonance frequency of a mechanical system or a motor.	270
		Set a notch filter.	204
	Auto tuning is not performed under Advanced magnetic flux vector control, Real sensorless vector control, or vector control.	Perform offline auto tuning.	428
	Gain adjustment during PID control is insufficient.	To stabilize the measured value, change the proportional band (**Pr.129**) to a larger value, the integral time (**Pr.130**) to a slightly longer time, and the differential time (**Pr.134**) to a slightly shorter time. Check the calibration of set point and measured value.	483
	The gain is too high under Real sensorless vector control, vector control, or PM sensorless vector control.	During speed control, check the setting of **Pr.820 Speed control P gain 2**.	188
		During torque control, check the setting of **Pr.824 Torque control P gain 2**.	219
Others	Mechanical looseness	Adjust machine/equipment so that there is no mechanical looseness.	—
	Contact the motor manufacturer.		
Motor	Operating with output phase loss	Check the motor wiring.	—

上正科技有限公司
購買、維修 此手冊零組件
電話： 037-466333
Email: service@repairtw.com
Line id: @zzz2
www.repairtw.com

6.6.3 Inverter generates abnormal noise

Check points	Possible cause	Countermeasure	Refer to page
fan	Fan cover was not correctly installed when a cooling fan was replaced.	Install a fan cover correctly.	659

6.6.4 Motor generates heat abnormally

Check points	Possible cause	Countermeasure	Refer to page
Motor	Motor fan is not working (Dust is accumulated.)	Clean the motor fan. Improve the environment.	—
	Phase to phase insulation of the motor is insufficient.	Check the insulation of the motor.	—
Main Circuit	The inverter output voltage (U, V, W) are unbalanced.	Check the output voltage of the inverter. Check the insulation of the motor.	663
Parameter Setting	**Pr.71 Applied motor** setting is incorrect.	Check the **Pr.71 Applied motor** setting.	424
—	Motor current is large.	Refer to "6.6.11 Motor current is too large".	649

6.6.5 Motor rotates in the opposite direction

Check points	Possible cause	Countermeasure	Refer to page
Main Circuit	Phase sequence of output terminals U, V and W is incorrect.	Connect phase sequence of the output cables (terminal U, V, W) to the motor correctly.	38
Input signal	The start signals (forward rotation, reverse rotation) are connected improperly.	Check the wiring. (STF: forward rotation, STR: reverse rotation)	45, 422
	The polarity of the frequency command is negative during the polarity reversible operation set by **Pr.73 Analog input selection** .	Check the polarity of the frequency command.	391
Input signal Parameter Setting	Torque command is negative during torque control under vector control.	Check the torque command value.	211

上正科技有限公司
購買、維修 此手冊零組件
電話： 037-466333
Email: service@repairtw.com
Line id: @zzzz
www.repairtw.com

6.6.6 Speed greatly differs from the setting

Check points	Possible cause	Countermeasure	Refer to page
Input signal	Frequency setting signal is incorrectly input.	Measure the input signal level.	—
	The input signal lines are affected by external EMI.	Take countermeasures against EMI, such as using shielded wires for input signal lines.	84
Parameter Setting	**Pr.1 Maximum frequency, Pr.2 Minimum frequency, Pr.18 High speed maximum frequency, and calibration parameter C2 to C7** settings are improper.	Check the settings of **Pr.1, Pr.2, and Pr.18**.	334
		Check the calibration parameter C2 to C7 settings.	400
	Pr.31 to Pr.36, Pr.552 (frequency jump) settings are improper.	Narrow down the range of frequency jump.	335
Load	Stall prevention (torque limit) function is activated due to a heavy load.	Reduce the load weight.	—
Parameter Setting		Set **Pr.22 Stall prevention operation level** (torque limit level) higher according to the load. (If **Pr.22** is set too high, an overcurrent trip (E.OC[]) is likely to occur.)	181, 336
Motor		Check the capacities of the inverter and the motor.	—

6.6.7 Acceleration/deceleration is not smooth

Check points	Possible cause	Countermeasure	Refer to page
Parameter Setting	Acceleration/deceleration time is too short.	Increase the acceleration/deceleration time.	278
	Torque boost **(Pr.0, Pr.46, Pr.112)** setting is improper under V/F control, so the stall prevention function is activated.	Increase/decrease the **Pr.0 Torque boost** setting value by 0.5% increments so that stall prevention does not occur.	577
	The base frequency does not match the motor characteristics.	Under V/F control, set **Pr.3 Base frequency, Pr.47 Second V/F (base frequency), and Pr.113 Third V/F (base frequency)**.	578
		Under vector control, set **Pr.84 Rated motor frequency**.	160
	Regeneration avoidance operation is performed	If the frequency becomes unstable during regeneration avoidance operation, decrease the setting of **Pr.886 Regeneration avoidance voltage gain**.	599
Load	Stall prevention (torque limit) function is activated due to a heavy load.	Reduce the load weight.	—
Parameter Setting		Set **Pr.22 Stall prevention operation level** (torque limit level) higher according to the load. (If **Pr.22** is set too high, an overcurrent trip (E.OC[]) is likely to occur.)	181, 336
Motor		Check the capacities of the inverter and the motor.	—

上正科技有限公司
購買、維修 此手冊零組件
電話： 037-466333
Email: service@repairtw.com
Line id: @zzzz
www.repairtw.com

6.6.8 Speed varies during operation

Under Advanced magnetic flux vector control, Real sensorless vector control, vector control, and encoder feedback control, the output frequency varies between 0 and 2 Hz as the load fluctuates. This is a normal operation and not a fault.

Check points	Possible cause	Countermeasure	Refer to page
Load	Load varies during an operation.	Select Advanced magnetic flux vector control, Real sensorless vector control, vector control, or encoder feedback control.	160, 603
Input signal	Frequency setting signal is varying.	Check the frequency setting signal.	—
	The frequency setting signal is affected by EMI.	Set filter to the analog input terminal using **Pr.74 Input filter time constant** , **Pr.822 Speed setting filter 1**.	398
		Take countermeasures against EMI, such as using shielded wires for input signal lines.	84
	Malfunction is occurring due to the undesirable current generated when the transistor output unit is connected.	Use terminal PC (terminal SD when source logic) as a common terminal to prevent a malfunction caused by undesirable current.	50
	Multi-speed command signal is chattering.	Take countermeasures to suppress chattering.	—
	Feedback signal from the encoder is affected by EMI.	Place the encoder cable far from the EMI source such as main circuit and power supply voltage. Earth (ground) the shield of the encoder cable to the enclosure using a metal P-clip or U-clip.	65
Parameter Setting	Fluctuation of power supply voltage is too large.	Under V/F control, change the **Pr.19 Base frequency voltage** setting (approximately by 3%).	578
	Pr.80 Motor capacity and **Pr.81 Number of motor poles** are not appropriate for the motor capacity under Advanced magnetic flux vector control, Real sensorless vector control, vector control, or PM sensorless vector control.	Check the settings of **Pr.80** and **Pr.81**.	160
	Wiring length exceeds 30 m when Advanced magnetic flux vector control, Real sensorless vector control, vector control, or PM sensorless vector control is selected.	Perform offline auto tuning.	428
	Under V/F control, wiring is too long and a voltage drop occurs.	In the low-speed range, set 0.5% in **Pr.0 Torque boost**.	577
		Change the control method to Advanced magnetic flux vector control or Real sensorless vector control.	160
	Hunting occurs by the generated vibration, for example, when structural rigidity at load side is insufficient.	Disable automatic control functions, such as the energy saving operation, fast-response current limit operation, torque limit, regeneration avoidance function, Advanced magnetic flux vector control, Real sensorless vector control, vector control, encoder feedback control, droop control, stall prevention, online auto tuning, notch filter, and orientation control. Under PID control, set smaller values to **Pr.129 PID proportional band** and **Pr.130 PID integral time**. Adjust so that the control gain decreases and the level of safety increases.	—
		Change **Pr.72 PWM frequency selection** setting.	270

上正科技有限公司
購買 維修 此手冊零組件
電話 037-466333
Email service@repairtw.com
line id: @2222
www.repairtw.com

6.6.9 Operation mode is not changed properly

Check points	Possible cause	Countermeasure	Refer to page
Input signal	Start signal (STF or STR) is ON.	Check that the STF and STR signals are off. When either is ON, the operation mode cannot be changed.	45, 422
Parameter Setting	**Pr.79 Operation mode selection** setting is improper.	When the **Pr.79** is set to "0 (initial value)", the operation mode is the External operation mode at power ON. To switch to the PU operation mode, press PU/EXT on the operation panel (press PU on the parameter unit (FR-PU07)). At other settings (1 to 4, 6, 7), the operation mode is limited accordingly.	299
	Operation mode and a writing device do not correspond.	Check **Pr.79 Operation mode selection, Pr.338 Communication operation command source, Pr.339 Communication speed command source, Pr.550 NET mode operation command source selection** and **Pr.551 PU mode operation command source selection**, and select an operation mode suitable for the purpose.	299, 308

6.6.10 Operation panel (FR-DU08) display is not operating

Check points	Possible cause	Countermeasure	Refer to page
Main Circuit Control Circuit	Power is not input.	Input the power.	33
Front cover	Operation panel is not properly connected to the inverter.	Check if the inverter front cover is installed securely.	22

上正科技有限公司
購買、維修 此手冊零組件
電話： 037-466333
Email: service@repairtw.com
Line id: @zzzz
www.repairtw.com

6.6.11 Motor current is too large

Check points	Possible cause	Countermeasure	Refer to page
Parameter Setting	Torque boost **(Pr.0, Pr.46, Pr.112)** setting is improper under V/F control, so the stall prevention function is activated.	Increase/decrease the **Pr.0 Torque boost** setting value by 0.5% increments so that stall prevention does not occur.	577
	V/F pattern is improper when V/F control is performed. (**Pr.3, Pr.14, Pr.19**)	Set rated frequency of the motor to **Pr.3 Base frequency**. Use **Pr.19 Base frequency voltage** to set the base voltage (for example, rated motor voltage).	578
		Change **Pr.14 Load pattern selection**according to the load characteristic.	580
	Stall prevention (torque limit) function is activated due to a heavy load.	Reduce the load weight.	—
		Pr.22 Stall prevention operation level (Torque limit level)	181, 336
		Check the capacities of the inverter and the motor.	—
	Offline auto tuning is not performed under Advanced magnetic flux vector control, Real sensorless vector control, or vector control.	Perform offline auto tuning.	428
	When PM sensorless vector control is selected for an IPM motor other than MM-CF, and offline auto tuning is not performed.	Perform offline auto tuning for an IPM motor.	438

6.6.12 Speed does not accelerate

Check points	Possible cause	Countermeasure	Refer to page
Input signal	Start command and frequency command are chattering.	Check if the start command and the frequency command are correct.	—
	The wiring length used for analog frequency command is too long, and it is causing a voltage (current) drop.	Perform Analog input bias/gain calibration.	400
	The input signal lines are affected by external EMI.	Take countermeasures against EMI, such as using shielded wires for input signal lines.	84
Parameter Setting	**Pr.1 Maximum frequency, Pr.2 Minimum frequency, Pr.18 High speed maximum frequency, and calibration parameter C2 to C7** settings are improper.	Check the settings of **Pr.1 and Pr.2** and set **Pr.18**.	334
		Check the **calibration parameter C2 to C7** settings.	400
	The maximum voltage (current) input value is not set during the External operation. **(Pr.125, Pr.126, Pr.18)**	Check the settings of **Pr.125 Terminal 2 frequency setting gain frequency** and **Pr.126 Terminal 4 frequency setting gain frequency**. To operate at 120 Hz or higher, set **Pr.18 High speed maximum frequency**.	334, 400
	Torque boost **(Pr.0, Pr.46, Pr.112)** setting is improper under V/F control, so the stall prevention function is activated.	Increase/decrease the **Pr.0 Torque boost** setting value by 0.5% increments so that stall prevention does not occur.	577
	V/F pattern is improper when V/F control is performed. (**Pr.3, Pr.14, Pr.19**)	Set rated frequency of the motor to **Pr.3 Base frequency**. Use **Pr.19 Base frequency voltage** to set the base voltage (for example, rated motor voltage).	578
		Change **Pr.14 Load pattern selection** according to the load characteristic.	580
	Stall prevention (torque limit) function is activated due to a heavy load.	Reduce the load weight.	—
		Set **Pr.22 Stall prevention operation level** (torque limit level) higher according to the load. (If **Pr.22** is set too high, an overcurrent trip (E.OC[]) is likely to occur.)	181, 336
		Check the capacities of the inverter and the motor.	—
	Auto tuning is not performed under Advanced magnetic flux vector control, Real sensorless vector control, or vector control.	Perform offline auto tuning.	428
	The setting of pulse train input is improper.	Check the specification of the pulse generator (open collector output or complementary output) and check the adjustment of the pulse train and frequency (**Pr.385 Frequency for zero input pulse** and **Pr.386 Frequency for maximum input pulse**).	315
	During PID control, output frequency is automatically controlled to make measured value = set point.		483
Main Circuit	Brake resistor is connected across terminals P/+ and P1 or across P1 and PR by mistake.	Connect an optional brake resistor (FR-ABR) across terminals P/+ and PR.	71

上正科技有限公司
購買、維修 此手冊零組件
電話： 037-466333
Email: service@repairtw.com
Line id: @7777
www.repairtw.com

6.6.13 Unable to write parameter setting

Check points	Possible cause	Countermeasure	Refer to page
Input signal	Operation is being performed (signal STF or STR is ON).	Stop the operation. When **Pr.77 Parameter write selection** = "0" (initial value), write is enabled only during a stop.	260
Parameter Setting	You are attempting to set the parameter in the External operation mode.	Choose the PU operation mode. Or, set **Pr.77 Parameter write selection** = "2" to enable parameter write regardless of the operation mode.	260, 299
	Parameter write is disabled by the **Pr.77 Parameter write selection** setting.	Check the **Pr.77** setting.	260
	Key lock mode is enabled by the **Pr.161 Frequency setting/key lock operation selection** setting.	Check the **Pr.161** setting.	256
	Operation mode and a writing device do not correspond.	Check **Pr.79 Operation mode selection, Pr.338 Communication operation command source, Pr.339 Communication speed command source, Pr.550 NET mode operation command source selection** and **Pr.551 PU mode operation command source selection**, and select an operation mode suitable for the purpose.	299, 308
	Pr.72 PWM frequency selection was attempted to be set to "25".Alternatively, PM sensorless vector control was attempted while **Pr.72** = "25".	**Pr.72** = "25" cannot be set under PM sensorless vector control. (A sine wave filter (MT-BSL/BSC) cannot be used under PM sensorless vector control.)	270

昇北科技有限公司
購買、維修 此手冊零組件
電話： 037-466333
Email: service@repairtw.com
Line id: @zzzz
www.repairtw.com

6.6.14 Power lamp is not lit

Check points	Possible cause	Countermeasure	Refer to page
Main Circuit Control Circuit	Wiring or installation is improper.	Check for the wiring and the installation. Power lamp is lit when power is supplied to the control circuit (R1/L11, S1/L21).	37

MEMO

上正科技有限公司
購買、維修 此手冊零組件
電話： 037-466333
Email: service@repairtw.com
Line id: @zzzz
www.repairtw.com

7 PRECAUTIONS FOR MAINTENANCE AND INSPECTION

This chapter explains the "PRECAUTIONS FOR MAINTENANCE AND INSPECTION" for this product.
Always read the instructions before using the equipment.
For "PRECAUTIONS FOR MAINTENANCE AND INSPECTION" of the IP55 compatible model, refer to FR-A806 Instruction Manual (Hardware).

上正科技有限公司
購買、維修 此手冊零組件
電話： 037-466333
Email: service@repairtw.com
line id: @zzzz
www.repairtw.com

7.1 Inspection item.....654
7.2 Measurement of main circuit voltages, currents and powers...663

The inverter is a static unit mainly consisting of semiconductor devices. Daily inspection must be performed to prevent any fault from occurring due to the adverse effects of the operating environment, such as temperature, humidity, dust, dirt and vibration, changes in the parts with time, service life, and other factors.

•Precautions for maintenance and inspection

When accessing the inverter for inspection, wait for at least 10 minutes after the power supply has been switched OFF, and then make sure that the voltage across the main circuit terminals P/+ and N/- of the inverter is not more than 30 VDC using a tester, etc.

7.1 Inspection item

7.1.1 Daily inspection

Basically, check for the following faults during operation.

- Motor operation fault
- Improper installation environment
- Cooling system fault
- Abnormal vibration, abnormal noise
- Abnormal overheat, discoloration

7.1.2 Periodic inspection

Check the areas inaccessible during operation and requiring periodic inspection.
Consult us for periodic inspection.

- Check and clean the cooling system. ..... Clean the air filter, etc.
- Check the tightening and retighten. ..... The screws and bolts may become loose due to vibration, temperature changes, etc. Check and tighten them.
  Tighten them according to the specified tightening torque. (Refer to page 41.)
- Check the conductors and insulating materials for corrosion and damage.
- Measure the insulation resistance.
- Check and change the cooling fan and relay.

上正科技有限公司
購買、維修 此手冊零組件
電話： 037-466333
Email: service@repairtw.com
Line id: @zzzz
www.repairtw.com

REMARKS

- When using the safety stop function, periodic inspection is required to confirm that safety function of the safety system operates correctly.
  For more details, refer to the Safety stop function instruction manual (BCN-A23228-001).

7.1.3 Daily and periodic inspection

Area of inspection	Inspection item	Description	Inspection interval		Corrective action at fault occurrence	Check by the user
			Daily	Periodic *3		
General	Surrounding environment	Check the surrounding air temperature, humidity, dirt, corrosive gas, oil mist, etc.	o		Improve the environment.	
	Overall unit	Check for unusual vibration and noise.	o		Check fault location and retighten.	
		Check for dirt, oil, and other foreign material. *1	o		Clean.	
	Power supply voltage	Check that the main circuit voltages and control voltages are normal. *2	o		Inspect the power supply.	
Main circuit	General	(1) Check with megger (across main circuit terminals and earth (ground) terminal). (2) Check for loose screws and bolts. (3) Check for overheat traces on the parts. (4) Check for stain.		o o o o	Contact the manufacturer. Retighten. Contact the manufacturer. Clean.	
	Conductors, cables	(1) Check conductors for distortion. (2) Check cable sheaths for breakage and deterioration (crack, discoloration, etc.).		o o	Contact the manufacturer. Contact the manufacturer.	
	Transformer/ reactor	Check for unusual odor and abnormal increase of whining sound.	o		Stop the equipment and contact the manufacturer.	
	Terminal block	Check for a damage.		o	Stop the equipment and contact the manufacturer.	
	Smoothing aluminum electrolytic capacitor	(1) Check for liquid leakage. (2) Check for safety valve projection and bulge. (3) Visual check and judge by the life check of the main circuit capacitor. (Refer to page 658.)		o o o	Contact the manufacturer. Contact the manufacturer.	
	Relay/contactor	Check that the operation is normal and no chattering sound is heard.		o	Contact the manufacturer.	
	Resistor	(1) Check for crack in resistor insulation. (2) Check for a break in the cable.		o o	Contact the manufacturer. Contact the manufacturer.	
Control circuit, protective circuit	Operation check	(1) Check that the output voltages across phases are balanced while operating the inverter alone. (2) Check that no fault is found in protective and display circuits in a sequence protective operation test.		o o	Contact the manufacturer. Contact the manufacturer.	
	Components check: Overall	(1) Check for unusual odor and discoloration. (2) Check for serious rust development.		o o	Stop the equipment and contact the manufacturer. Contact the manufacturer.	
	Components check: Aluminum electrolytic capacitor	(1) Check for liquid leakage in a capacitor and deformation trace. (2) Visual check and judge by the life check of the control circuit capacitor. (Refer to page 658.)		o o	Contact the manufacturer.	

上正科技有限公司
購買、維修 此手冊零組件
電話： 037-466333
Email: service@repairtw.com
Line id: @zzzz
www.repairtw.com

Inspection item

Area of inspection	Inspection item	Description	Inspection interval		Corrective action at fault occurrence	Check by the user
			Daily	Periodic *3		
Cooling system	Cooling fan	(1) Check for unusual vibration and noise.	O		Replace the fan.	
		(2) Check for loose screws and bolts.		O	Fix with the fan cover fixing screws	
		(3) Check for stain.		O	Clean.	
	Heatsink	(1) Check for clogging.		O	Clean.	
		(2) Check for stain.		O	Clean.	
Display	Indication	(1) Check that display is normal.	O		Contact the manufacturer.	
		(2) Check for stain.		O	Clean.	
	Meter	Check that reading is normal.	O		Stop the equipment and contact the manufacturer.	
Load motor	Operation check	Check for vibration and abnormal increase in operation noise.	O		Stop the equipment and contact the manufacturer.	

*1 Oil component of the heat dissipation grease used inside the inverter may leak out. The oil component, however, is not flammable, corrosive, nor conductive and is not harmful to humans. Wipe off such oil component.

*2 It is recommended to install a voltage monitoring device for checking the voltage of the power supplied to the inverter.

*3 One to two years of periodic inspection cycle is recommended. However, it differs according to the installation environment. Consult us for periodic inspection.

REMARKS

- Continuous use of a leaked, deformed, or degraded smoothing aluminum electrolytic capacitor (as shown in the table above) may lead to a burst, breakage or fire. Replace such a capacitor without delay.

上正科技有限公司
購買、維修 此手冊零組件
電話： 037-466333
Email: service@repairtw.com
Line id: @zzzz
www.repairtw.com

7.1.4 Checking the inverter and converter modules

(1) Preparation

- Disconnect the external power supply cables (R/L1, S/L2, T/L3) and motor cables (U, V, W).
- Prepare a tester. (For the resistance measurement, use the 100 Ω range.)

(2) Checking method

Change the polarity of the tester alternately at the inverter terminals R/L1, S/L2, T/L3, U, V, W, P/+, and N/- and check the electric continuity.

REMARKS

- Before measurement, check that the smoothing capacitor is discharged.
- At the time of electric discontinuity, the measured value is almost ∞. When there is an instantaneous electric continuity, due to the smoothing capacitor, the tester may not indicate ∞. At the time of electric continuity, the measured value is several Ω to several tens of Ω. If all measured values are almost the same, although these values are not constant depending on the module type and tester type, the modules are without fault.

(3) Module device numbers and terminals to be checked

		Tester polarity ⊕	Tester polarity ⊖	Result		Tester polarity ⊕	Tester polarity ⊖	Result
Converter module	D1	R/L1	P/+	Discontinuity	D4	R/L1	N/-	Continuity
		P/+	R/L1	Continuity		N/-	R/L1	Discontinuity
	D2	S/L2	P/+	Discontinuity	D5	S/L2	N/-	Continuity
		P/+	S/L2	Continuity		N/-	S/L2	Discontinuity
	D3	T/L3	P/+	Discontinuity	D6	T/L3	N/-	Continuity
		P/+	T/L3	Continuity		N/-	T/L3	Discontinuity
Inverter module	TR1	U	P/+	Discontinuity	TR4	U	N/-	Continuity
		P/+	U	Continuity		N/-	U	Discontinuity
	TR3	V	P/+	Discontinuity	TR6	V	N/-	Continuity
		P/+	V	Continuity		N/-	V	Discontinuity
	TR5	W	P/+	Discontinuity	TR2	W	N/-	Continuity
		P/+	W	Continuity		N/-	W	Discontinuity

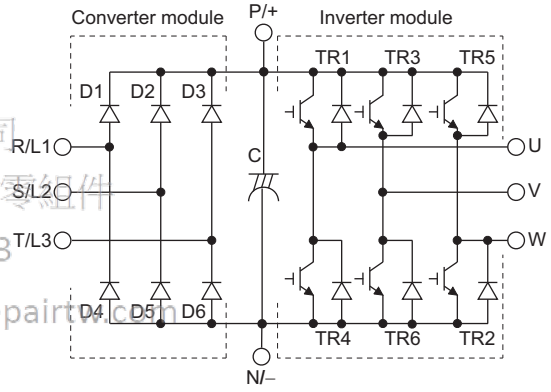

購買/維修此卡相關零組件
電話：
Email: service@repairtw.com
www.repairtw.com

(Assumes the use of an analog meter.)

7.1.5 Cleaning

Always run the inverter in a clean status.
When cleaning the inverter, gently wipe dirty areas with a soft cloth immersed in neutral detergent or ethanol.

REMARKS

- Do not use solvent, such as acetone, benzene, toluene and alcohol, as these will cause the inverter surface paint to peel off.
- The display, etc. of the operation panel (FR-DU08) and parameter unit (FR-PU07) are vulnerable to detergent and alcohol. Therefore, avoid using them for cleaning.

7.1.6 Replacement of parts

The inverter consists of many electronic parts such as semiconductor devices.
The following parts may deteriorate with age because of their structures or physical characteristics, leading to reduced performance or fault of the inverter. For preventive maintenance, the parts must be replaced periodically.
Use the life check function as a guidance of parts replacement.

Part name	Estimated lifespan*1	Description
Cooling fan	10 years	Replace (as required)
Main circuit smoothing capacitor	10 years*2	Replace (as required)
On-board smoothing capacitor	10 years*2	Replace the board (as required)
Relays	—	As required
Main circuit fuse (FR-A840-04320(160K) or higher)	10 years	Replace the fuse (as required)

*1 Estimated lifespan for when the yearly average surrounding air temperature is 40°C. (without corrosive gas, flammable gas, oil mist, dust and dirt etc.)
*2 Output current: 80% of the inverter rating

REMARKS

- For parts replacement, contact the nearest Mitsubishi FA center.

(1) Displaying the life of the inverter parts

The inverter diagnoses the main circuit capacitor, control circuit capacitor, cooling fan, and inrush current limit circuit by itself and estimates their lives.
The self-diagnostic warning is output when the life span of each part is near its end. It gives an indication of replacement time.

The life warning output can be used as a guideline for life judgment.

Parts	Judgment level
Main circuit capacitor	85% of the initial capacity
Control circuit capacitor	Estimated remaining life 10%
Inrush current limit circuit	Estimated remaining life 10% (Power ON: 100,000 times left)
Cooling fan	Less than 50% of the specified speed.*1

*1 Initial values differ according to the inverter capacity (Refer to page 274 for details.)

REMARKS

- Refer to page 271 to perform the life check of the inverter parts.

上正科技有限公司
購買、維修、說明書冊零組件
電話：037-466333
Email: service@repairtw.com
Line id: @2222
www.repairtw.com

(2) Replacement procedure of the cooling fan

The replacement interval of the cooling fan used for cooling the parts generating heat such as the main circuit semiconductor is greatly affected by the surrounding air temperature. When unusual noise and/or vibration are noticed during inspection, the cooling fan must be replaced immediately.

• Removal (FR-A820-00105(1.5K) to 04750(90K), FR-A840-00083(2.2K) to 03610(132K))

1) Push the hooks from above and remove the fan cover.

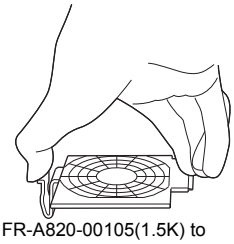

FR-A820-00105(1.5K) to 00250(3.7K)
FR-A840-00083(2.2K), 00126(3.7K)

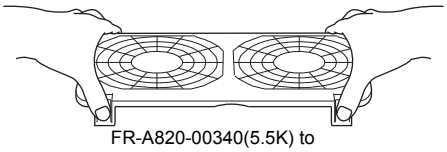

FR-A820-00340(5.5K) to 01540(30K),
FR-A840-00170(5.5K) to 00770(30K)

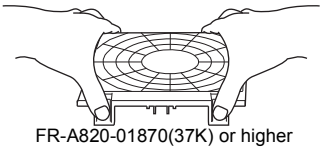

FR-A820-01870(37K) or higher
FR-A840-00930(37K) to 03610(132K)

2) Disconnect the fan connectors.
3) Remove the fan.

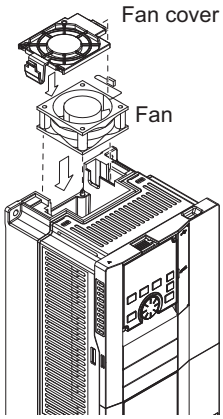

FR-A820-00105(1.5K) to 00250(3.7K)
FR-A840-00083(2.2K), 00126(3.7K)

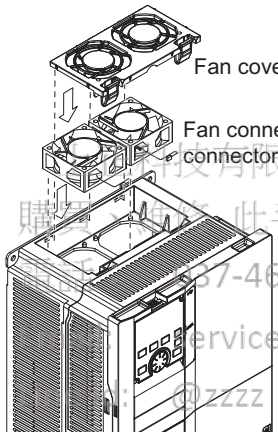

FR-A820-00340(5.5K) to 01540(30K)
FR-A840-00170(5.5K) to 00770(30K)

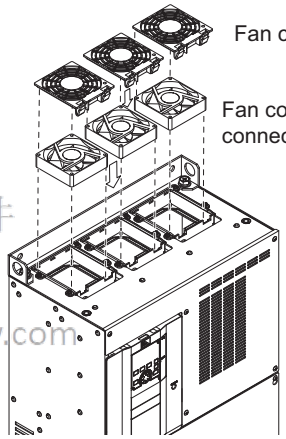

FR-A820-01870(37K) or higher
FR-A840-00930(37K) to 03610(132K)

購買、維修 此手冊零組件
電話: 037-466333
service@repairtw.com
Email: @zzzz
www.repairtw.com

*1 The number of cooling fans differs according to the inverter capacity.

• Reinstallation (FR-A820-00105(1.5K) to 04750(90K), FR-A840-00083(2.2K) to 03610(132K))

1) After confirming the orientation of the fan, reinstall the fan so that the "AIR FLOW" faces up.

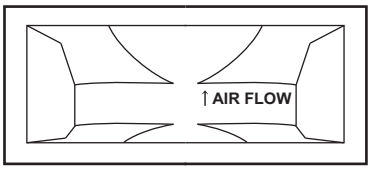

2) Reconnect the fan connectors.

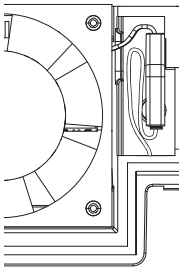

FR-A820-00105(1.5K) to 00250(3.7K)
FR-A840-00083(2.2K), 00126(3.7K)

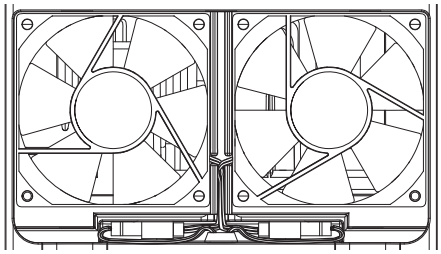

FR-A820-00340(5.5K) to 00770(15K),
FR-A840-00170(5.5K) to 00380(15K)

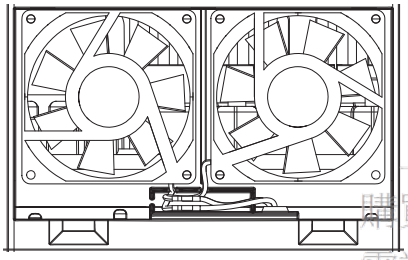

FR-A820-00930(18.5K), 01250(22K)
FR-A840-00470(18.5K), 00620(22K)

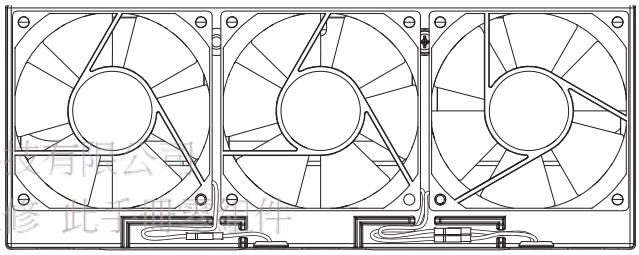

FR-A820-01540(30K)
FR-A840-00770(30K)

上正科技有限公司
購買、維修 此手冊零組件
電話： 037-466333
Email: service@repairtw.com
Line id: @zzzz
www.repairtw.com

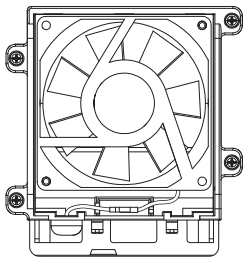

FR-A820-01870(37K), 02330(45K)
FR-A840-00930(37K) to 01800(55K)

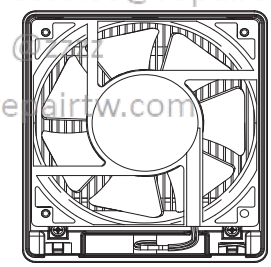

FR-A820-03160(55K) or higher
FR-A840-02160(75K) to 03610(132K)

3) Reinstall the fan cover.

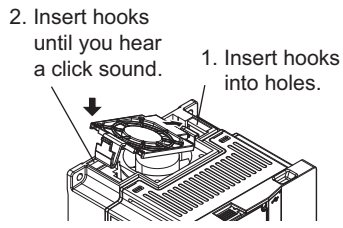

FR-A820-00105(1.5K) to 00250(3.7K)
FR-A840-00083(2.2K), 00126(3.7K)

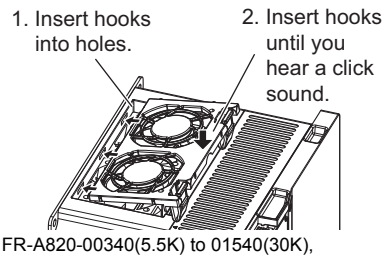

FR-A820-00340(5.5K) to 01540(30K),
FR-A840-00170(5.5K) to 00770(30K)

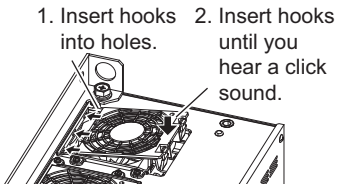

FR-A820-01870(37K) or higher
FR-A840-00930(37K) to 03610(132K)

REMARKS

- Installing the fan in the opposite direction of air flow can cause the inverter life to be shorter.
- Prevent the cable from being caught when installing a fan.
- Switch the power OFF before replacing fans. Since the inverter circuits are charged with voltage even after power OFF, replace fans only when the inverter cover is on the inverter to prevent an electric shock accident.

- **Removal (FR-A840-04320(160K) or higher)**

1) Remove the fan cover fixing screws, and remove the fan cover.
2) Disconnect the fan connector and remove the fan block.
3) Remove the fan fixing screws, and remove the fan.

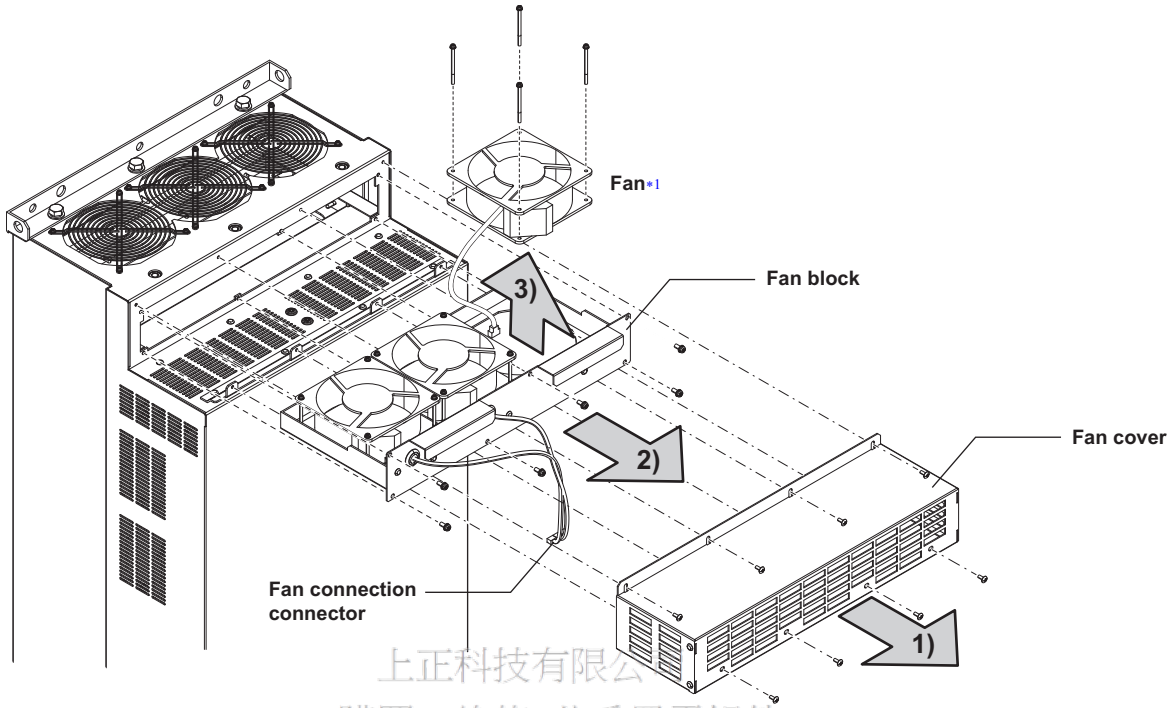

上正科技有限公
購買、維修此手冊零組件
電話： 037-466333
Email: service@repairtw.com
Line id: @zzzz
www.repairtw.com

*1 The number of cooling fans differs according to the inverter capacity.

- **Reinstallation (FR-A840-04320(160K) or higher)**

1) After confirming the orientation of the fan, reinstall the fan so that the arrow on the left of "AIR FLOW" faces up.

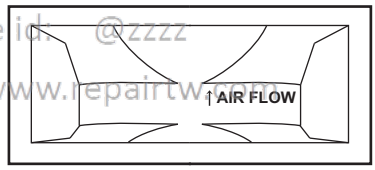

<Fan side face>

2) Install fans referring to the above figure.

CAUTION

- Installing the fan in the opposite air flow direction can cause the inverter life to be shorter.
- Prevent the cable from being caught when installing a fan.
- Switch the power OFF before replacing fans. Since the inverter circuits are charged with voltage even after power OFF, replace fans only when the inverter cover is on the inverter to prevent an electric shock accident.

(3) Smoothing capacitors

A large-capacity aluminum electrolytic capacitor is used for smoothing in the main circuit DC section, and an aluminum electrolytic capacitor is used for stabilizing the control power in the control circuit. Their characteristics are deteriorated by the adverse effects of ripple currents, etc. The replacement intervals greatly vary with the surrounding air temperature and operating conditions. When the inverter is operated in air-conditioned, normal environment conditions, replace the capacitors about every 10 years.
The appearance criteria for inspection are as follows:

- Case: Check the side and bottom faces for expansion.
- Sealing plate: Check for remarkable warp and extreme crack.
- heck for external crack, discoloration, liquid leakage, etc. Judge that the capacitor has reached its life when the measured capacitance of the capacitor reduced below 80% of the rating.

REMARKS

- The inverter diagnoses the main circuit capacitor and control circuit capacitor by itself and can judge their lives. (Refer to **page 271**.)

(4) Relays

To prevent a contact fault, etc., relays must be replaced according to the cumulative number of switching times (switching life).

(5) Main circuit fuse inside the inverter (FR-A840-04320(160K) or higher)

A fuse is used inside the inverter. Surrounding air temperature and operating condition affect the life of fuses. When the inverter is used in a normal air-conditioned environment, replace its fuse after about 10 years.

7.1.7 Inverter replacement

The inverter can be replaced with the control circuit wiring kept connected. Before replacement, remove the wiring cover of the inverter.

1) Loosen the two mounting screws at the both side of the control circuit terminal block. (These screws cannot be removed.) Slide down the control circuit terminal block to remove it.

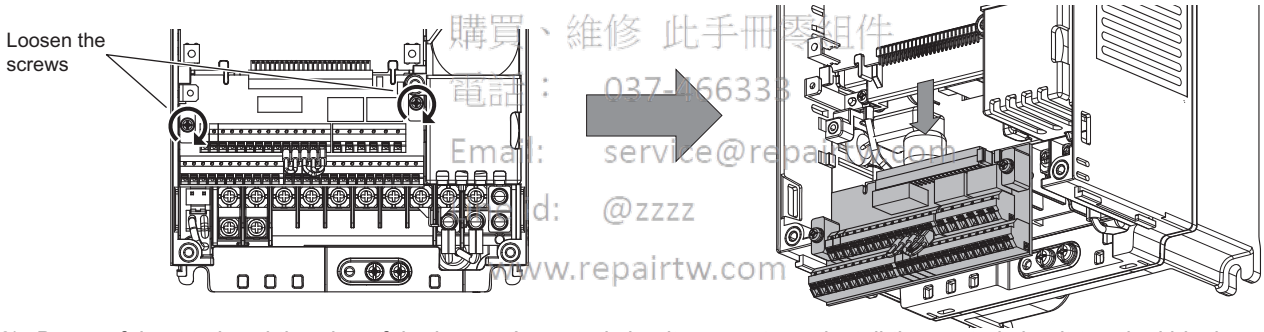

購買、維修 此手冊零組件
電話： 037-466333
Email: service@repairtw.com
Line id: @zzzz
www.repairtw.com

2) Be careful not to bend the pins of the inverter's control circuit connector, reinstall the control circuit terminal block and fix it with the mounting screws.

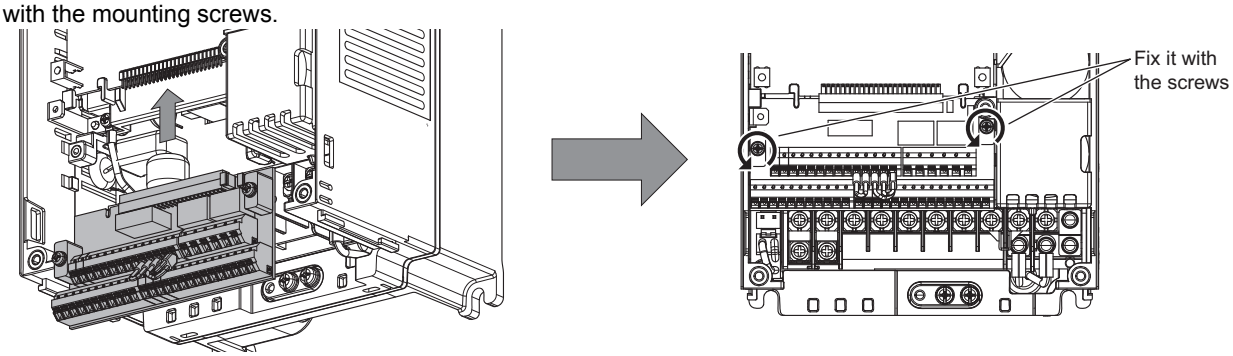

REMARKS

- Before starting inverter replacement, switch power OFF, wait for at least 10 minutes, and then check the voltage with a tester and such to ensure safety.

7.2 Measurement of main circuit voltages, currents and powers

Since the voltages and currents on the inverter power supply and output sides include harmonics, measurement data depends on the instruments used and circuits measured.
When instruments for commercial frequency are used for measurement, measure the following circuits with the instruments given on the next page.

- When installing meters etc. on the inverter output side
  When the inverter-to-motor wiring length is large, especially in the 400 V class, small-capacity models, the meters and CTs may generate heat due to line-to-line leakage current. Therefore, choose the equipment which has enough allowance for the current rating.
  To measure and display the output voltage and output current of the inverter, it is recommended to use the terminal AM and FM/CA output functions of the inverter.

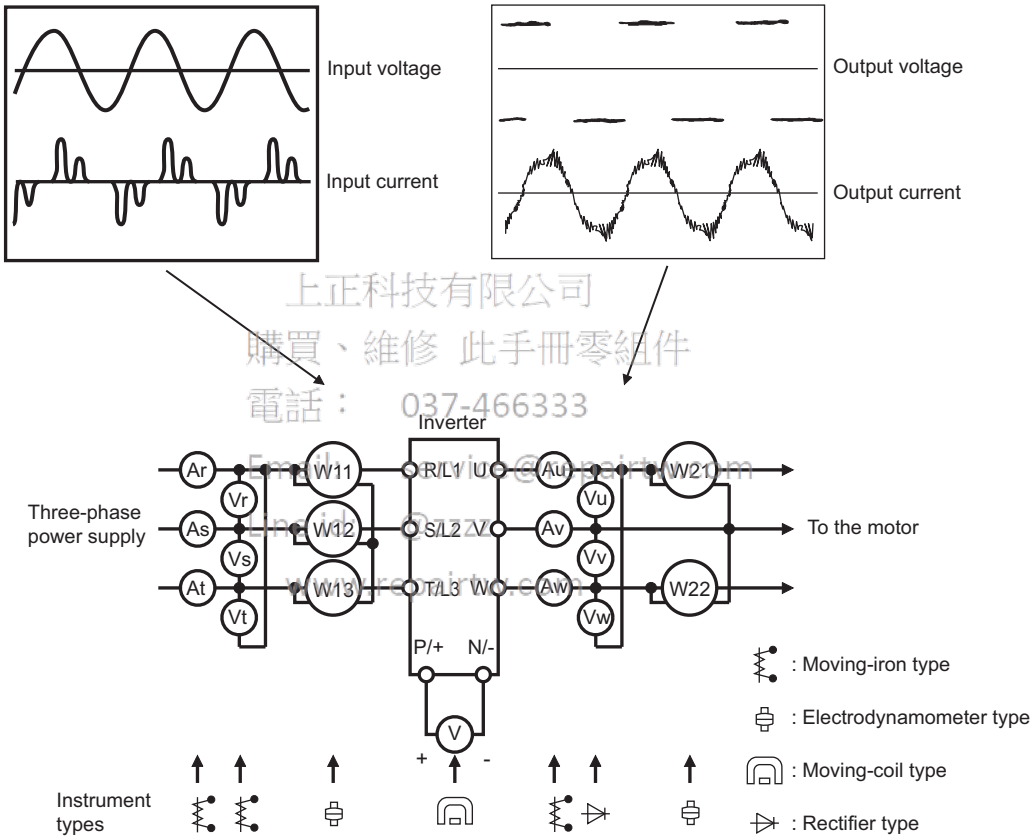

Examples of measuring points and instruments

上正科技有限公司
購買、維修 此手冊零組件
電話： 037-466333

Measurement of main circuit voltages, currents and powers

Measuring points and instruments

Item	Measuring point	Measuring instrument	Remarks (reference measured value)
Power supply voltage V1	Across R/L1 and S/L2, S/L2 and T/L3, T/L3 and R/L1	Moving-iron type AC voltmeter*4	Commercial power supply Within permissible AC voltage fluctuation (Refer to page 670.)
Power supply side current I1	R/L1, S/L2, T/L3 line current	Moving-iron type AC ammeter*4	
Power supply side power P1	R/L1, S/L2, T/L3 and Across R/L1 and S/L2, S/L2 and T/L3, T/L3 and R/L1	Digital power meter (for inverter) or electrodynamic type single-phase wattmeter	P1 = W11 + W12 + W13 (3-wattmeter method)
Power supply side power factor Pf1	Calculate after measuring power supply voltage, power supply side current and power supply side power. $Pf_1 = \frac{P_1}{\sqrt{3}V_1 \times I_1} \times 100\ \%$		
Output side voltage V2	Across U and V, V and W, and W and U	Rectifier type AC voltage meter*1*4 (moving-iron type cannot measure.)	Difference between the phases is within 1% of the maximum output voltage.
Output side current I2	U, V and W line currents	Moving-iron type AC ammeter*2*4	Difference between the phases is 10% or lower of the rated inverter current.
Output side power P2	U, V, W and across U and V, V and W	Digital power meter (for inverter) or electrodynamic type single-phase wattmeter	P2 = W21 + W22 2-wattmeter method (or 3-wattmeter method)
Output side power factor Pf2	Calculate in similar manner to power supply side power factor. $Pf_2 = \frac{P_2}{\sqrt{3}V_2 \times I_2} \times 100\ \%$		
Converter output	Across P/+ and N/-	Moving-coil type (such as tester)	Inverter LED is lit. 1.35 × V1
Frequency setting signal	Across 2, 4(+) and 5	Moving-coil type (tester and such may be used.) (internal resistance 50 kΩ or more)	0 to 10 VDC, 4 to 20 mA
	Across 1(+) and 5		0 to ±5 VDC and 0 to ±10 VDC
Frequency setting power supply	Across 10(+) and 5		5.2 VDC
	Across 10E(+) and 5		10 VDC
Frequency meter signal	Across AM(+) and 5		Approximately 10 VDC at maximum frequency (without frequency meter)
	Across CA(+) and 5		Approximately 20 mADC at maximum frequency
	Across FM(+) and SD		Approximately 5 VDC at maximum frequency (without frequency meter) 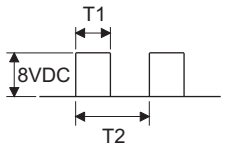 Pulse width T1 : Adjust with **C0 (Pr.900)**. Pulse cycle T2 : Set with **Pr.55**. (frequency monitor only)
Start signal Select signal Reset signal Output stop signal	Across STF, STR, RH, RM, RL, JOG, RT, AU, STOP, CS, RES, MRS(+) and SD (for sink logic)		When open 20 to 30 VDC ON voltage: 1 V or less
Fault signal	Across A1 and C1 Across B1 and C1	Moving-coil type (such as tester)	Continuity check*3 [Normal] [Fault] Across A1 and C1: Discontinuity / Continuity Across B1 and C1: Continuity / Discontinuity

上正科技有限公司
購買 維修 此手冊零組件
電話： 037-466333
Email: service@repairtw.com
Line id: @zzzz
www.repairtw.com

*1 Use an FFT to measure the output voltage accurately. A tester or general measuring instrument cannot measure accurately.

*2 When the carrier frequency exceeds 5 kHz, do not use this instrument since using it may increase eddy current losses produced in metal parts inside the instrument, leading to burnout. In this case, use an approximate-effective value type.

*3 When the setting of **Pr.195 ABC1 terminal function selection** is the positive logic

*4 A digital power meter (designed for inverter) can also be used to measure.

7.2.1 Measurement of powers

Use digital power meters (for inverter) for the both of inverter input and output side. Alternatively, measure using electrodynamic type single-phase wattmeters for the both of inverter input and output side in two-wattmeter or three-wattmeter method. As the current is liable to be imbalanced especially in the input side, it is recommended to use the three-wattmeter method.

Examples of measured value differences produced by different measuring meters are shown below.

An error will be produced by difference between measuring instruments, e.g. power calculation type and two- or three-wattmeter type three-phase wattmeter. When a CT is used in the current measuring side or when the meter contains a PT on the voltage measurement side, an error will also be produced due to the frequency characteristics of the CT and PT.

[Measurement conditions]

Constant output of 60 Hz or more frequency with a constant-torque (100%). The value obtained by the 3-wattmeter method with a 4-pole 3.7 kW induction motor is assumed to be 100%.

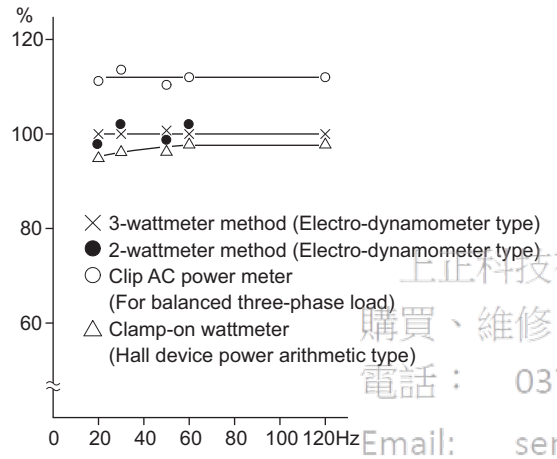

Example of measuring inverter input power

[Measurement conditions]

Constant output of 60 Hz or more frequency with a constant-torque (100%). The value obtained by the 3-wattmeter method with a 4-pole 3.7 kW induction motor is assumed to be 100%.

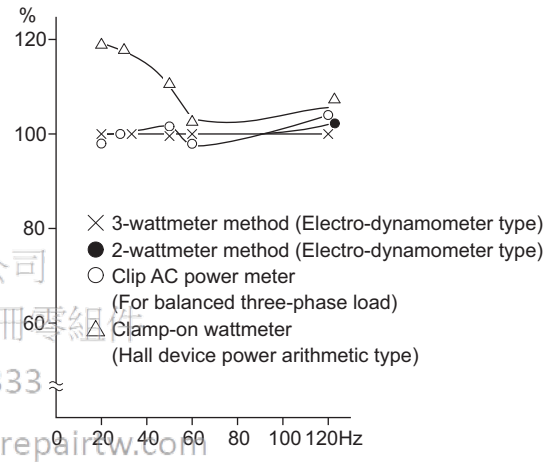

Example of measuring inverter output power

上正科技有限公司
購買、維修 此手冊零組件
電話： 037-466333
Email: service@repairtw.com
Line id: @zzzz
www.pctool.com.tw

7.2.2 Measurement of voltages and use of PT

(1) Inverter input side

As the input side voltage has a sine wave and it is extremely small in distortion, accurate measurement can be made with an ordinary AC meter.

(2) Inverter output side

Since the output side voltage has a PWM-controlled rectangular wave, always use a rectifier type voltmeter. A needle type tester cannot be used to measure the output side voltage as it indicates a value much greater than the actual value. A moving-iron type meter indicates an effective value which includes harmonics and therefore the value is larger than that of the fundamental wave. The value monitored on the operation panel is the inverter-controlled voltage itself. Hence, that value is accurate and it is recommended to monitor values (analog output) using the operation panel.

(3) PT

No PT can be used in the output side of the inverter. Use a direct-reading meter. (A PT can be used in the input side of the inverter.)

7.2.3 Measurement of currents

Use moving-iron type meters on both the input and output sides of the inverter. However, if the carrier frequency exceeds 5 kHz, do not use that meter since an overcurrent losses produced in the internal metal parts of the meter will increase and the meter may burn out. In this case, use an approximate-effective value type.

Since current on the inverter input side tends to be unbalanced, measurement of three phases is recommended. Correct value cannot be obtained by measuring only one or two phases. On the other hand, the unbalanced ratio of each phase of the output side current should be within 10%.

When a clamp ammeter is used, always use an effective value detection type. A mean value detection type produces a large error and may indicate an extremely smaller value than the actual value. The value monitored on the operation panel is accurate if the output frequency varies, and it is recommended to monitor values (provide analog output) using the operation panel.

Examples of measured value differences produced by different measuring meters are shown below.

[Measurement conditions]
Indicated value of the moving-iron type ammeter is 100%.

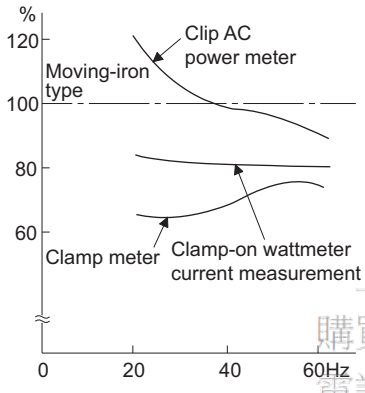

Example of measuring inverter input current

[Measurement conditions]
Indicated value of the moving-iron type ammeter is 100%.

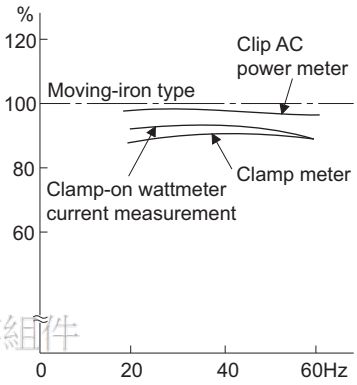

Example of measuring inverter output current

上正科技有限公司
購買、維修 此手冊零組件
電話： 037-466333
Email: service@repairtw.com

7.2.4 Use of CT and transducer

A CT may be used in both the input and output sides of the inverter. Use the one with the largest possible VA ability because an error will increase if the frequency gets lower.

When using a transducer, use the effective value calculation type which is immune to harmonics.

7.2.5 Measurement of inverter input power factor

Calculate using effective power and apparent power. A power-factor meter cannot indicate an exact value.

$$\text{Total power factor of the inverter} = \frac{\text{Effective power}}{\text{Apparent power}} = \frac{\text{Three-phase input power found by the 3-wattmeter method}}{\sqrt{3} \times \text{V (power supply voltage)} \times \text{I (input current effective value)}}$$

7.2.6 Measurement of converter output voltage (across terminals P and N)

The output voltage of the converter is output across terminals P and N and can be measured with a moving-coil type meter (tester). Although the voltage varies according to the power supply voltage, approximately 270 VDC to 300 VDC (540 VDC to 600 VDC for the 400 V class) is output when no load is connected and voltage decreases during driving load operation.

When energy is regenerated from the motor during deceleration, for example, the converter output voltage rises to nearly 400 VDC to 450 VDC (800 VDC to 900 VDC for the 400 V class) maximum.

7.2.7 Measurement of inverter output frequency

In the initial setting of the FM-type inverter, a pulse train proportional to the output frequency is output across the pulse train output terminals FM and SD of the inverter. This pulse train output can be counted by a frequency counter, or a meter (moving-coil type voltmeter) can be used to read the mean value of the pulse train output voltage. When a meter is used to measure the output frequency, approximately 5 VDC is indicated at the maximum frequency.
For detailed specifications of the pulse train output terminal FM, refer to page 361.
In the initial setting of the CA-type inverter, a pulse train proportional to the output frequency is output across the analog current output terminals CA and 5 of the inverter. Measure the current using an ammeter or tester.
For detailed specifications of the analog current output terminal CA, refer to page 363.

7.2.8 Insulation resistance test using megger

- For the inverter, conduct the insulation resistance test on the main circuit only as shown below and do not perform the test on the control circuit. (Use a 500 VDC megger.)

REMARKS

- Before performing the insulation resistance test on the external circuit, disconnect the cables from all terminals of the inverter so that the test voltage is not applied to the inverter.
- For the continuity test of the control circuit, use a tester (high resistance range) and do not use the megger or buzzer.

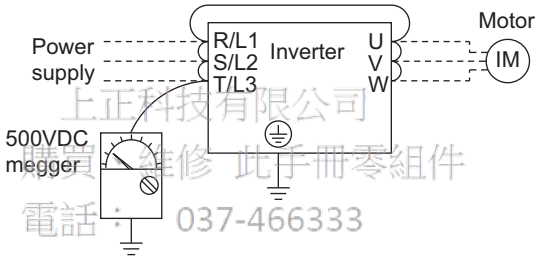

上正科技有限公司
購買、維修 此手冊零組件
電話：037-466333
Email: service@repairtw.com
Line id: @zzzz
www.repairtw.com

7.2.9 Pressure test

Do not conduct a pressure test. Deterioration may occur.

MEMO

上正科技有限公司
購買、維修 此手冊零組件
電話： 037-466333
Email: service@repairtw.com
Line id: @zzzz
www.repairtw.com

8 SPECIFICATIONS

This chapter explains the "SPECIFICATIONS" of this product.
Always read the instructions before using the equipment.
For "SPECIFICATIONS" of the IP55 compatible model, refer to FR-A806 Instruction Manual (Hardware).

8.1 Inverter rating 670
8.2 Motor rating 672
8.3 Common specifications 675
8.4 Outline dimension drawings 677

上正科技有限公司
購買、維修 此手冊零組件
電話： 037-466333
Email: service@repairtw.com
Line id: @zzzz
www.repairtw.com

8.1 Inverter rating

◆ 200 V class

Model FR-A820-[ ]			00046	00077	00105	00167	00250	00340	00490	00630	00770	00930	01250	01540	01870	02330	03160	03800	04750
			0.4K	0.75K	1.5K	2.2K	3.7K	5.5K	7.5K	11K	15K	18.5K	22K	30K	37K	45K	55K	75K	90K
Applicable motor capacity (kW) *1		SLD	0.75	1.5	2.2	3.7	5.5	7.5	11	15	18.5	22	30	37	45	55	75	90/110	132
		LD	0.75	1.5	2.2	3.7	5.5	7.5	11	15	18.5	22	30	37	45	55	75	90	110
		ND (initial setting)	0.4	0.75	1.5	2.2	3.7	5.5	7.5	11	15	18.5	22	30	37	45	55	75	90
		HD	0.2	0.4	0.75	1.5	2.2	3.7	5.5	7.5	11	15	18.5	22	30	37	45	55	75
Output	Rated capacity (kVA) *2	SLD	1.8	2.9	4	6.4	10	13	19	24	29	35	48	59	71	89	120	145	181
		LD	1.6	2.7	3.7	5.8	8.8	12	17	22	27	32	43	53	65	81	110	132	165
		ND (initial setting)	1.1	1.9	3	4.2	6.7	9.1	13	18	23	29	34	44	55	67	82	110	132
		HD	0.6	1.1	1.9	3	4.2	6.7	9.1	13	18	23	29	34	44	55	67	82	110
	Rated current (A) *3	SLD	4.6 (3.9)	7.7 (6.5)	10.5 (8.9)	16.7 (14.2)	25 (21.3)	34 (28.9)	49 (41.7)	63 (53.6)	77 (65.5)	93 (79.1)	125 (106)	154 (131)	187 (159)	233 (198)	316 (269)	380 (323)	475 (404)
		LD	4.2 (3.6)	7 (6)	9.6 (8.2)	15.2 (12.9)	23 (19.6)	31 (26.4)	45 (38.3)	58 (49.3)	70.5 (59.9)	85 (72.3)	114 (96.9)	140 (119)	170 (145)	212 (180)	288 (245)	346 (294)	432 (367)
		ND (initial setting)	3 (4.5)	5 (7.5)	8 (12)	11 (16.5)	17.5 (26.3)	24 (36)	33 (49.5)	46 (69)	61 (91.5)	76 (114)	90 (135)	115 (173)	145 (218)	175 (263)	215 (323)	288 (432)	346 (519)
		HD	1.5 (4.5)	3 (7.5)	5 (12)	8 (16.5)	11 (26.3)	17.5 (36)	24 (49.5)	33 (69)	46 (91.5)	61 (114)	76 (135)	90 (173)	115 (218)	145 (263)	175 (323)	215 (432)	288 (519)
	Overload current rating *4	SLD	110% 60 s, 120% 3 s (inverse-time characteristics) at surrounding air temperature 40°C																
		LD	120% 60 s, 150% 3 s (inverse-time characteristics) at surrounding air temperature 50°C																
		ND (initial setting)	150% 60 s, 200% 3 s (inverse-time characteristics) at surrounding air temperature 50°C																
		HD	200% 60 s, 250% 3 s (inverse-time characteristics) at surrounding air temperature 50°C																
	Rated voltage *5		Three-phase 200 to 240 V																
	Regenerative braking	Brake transistor	Built-in											FR-BU2 (Option)					
		Maximum brake torque*7	150% torque/3%ED *6			100% torque/ 3%ED *6		100% torque/ 2%ED *6		20% torque/continuous								10% torque/ continuous	
		FR-ABR (when the option is used)	150% torque/ 10%ED		100% torque/10%ED					100% torque/6%ED				—	—	—	—	—	—
Power supply	Rated input AC voltage/frequency		Three-phase 200 to 240 V 50 Hz/60 Hz																
	Permissible AC voltage fluctuation		170 to 264 V 50 Hz/60 Hz																
	Permissible frequency fluctuation		±5%																
	Rated input current (A) *8	SLD	5.3	8.9	13.2	19.7	31.3	45.1	62.8	80.6	96.7	115	151	185	221	269	316	380	475
		LD	5	8.3	12.2	18.3	28.5	41.6	58.2	74.8	90.9	106	139	178	207	255	288	346	432
		ND (initial setting)	3.9	6.3	10.6	14.1	22.6	33.4	44.2	60.9	80	96.3	113	150	181	216	266	288	346
		HD	2.3	3.9	6.3	10.6	14.1	22.6	33.4	44.2	60.9	80	96.3	113	150	181	216	215	288
	Power supply capacity (kVA) *9	SLD	2	3.4	5	7.5	12	17	24	31	37	44	58	70	84	103	120	145	181
		LD	1.9	3.2	4.7	7	11	16	22	29	35	41	53	68	79	97	110	132	165
		ND (initial setting)	1.5	2.4	4	5.4	8.6	13	17	23	30	37	43	57	69	82	101	110	132
		HD	0.9	1.5	2.4	4	5.4	8.6	13	17	23	30	37	43	57	69	82	82	110
Protective structure (IEC 60529) *10			Enclose type (IP20)											Open type (IP00)					
Cooling system			Self-cooling		Forced air cooling														
Approx. mass (kg)			2.0	2.2	3.3	3.3	3.3	6.7	6.7	8.3	15	15	15	22	42	42	54	74	74

*1 The applicable motor capacity indicated is the maximum capacity applicable for use of the Mitsubishi 4-pole standard motor.
*2 The rated output capacity indicated assumes that the output voltage is 220 V for 200 V class.
*3 When an operation is performed with the carrier frequency set to 3 kHz or more, and the inverter output current reaches the value indicated in the parenthesis of the rated current, the carries frequency is automatically lowered. The motor noise becomes louder accordingly.
*4 The % value of the overload current rating indicated is the ratio of the overload current to the inverter's rated output current. For repeated duty, allow time for the inverter and motor to return to or below the temperatures under 100% load.
*5 The maximum output voltage does not exceed the power supply voltage. The maximum output voltage can be changed within the setting range. However, the maximum point of the voltage waveform at the inverter output side is the power supply voltage multiplied by about $\sqrt{2}$.
*6 Value by the built-in brake resistor
*7 Value for the ND rating
*8 The rated input current indicates a value at a rated output voltage. The impedance at the power supply side (including those of the input reactor and cables) affects the rated input current.
*9 The power supply capacity is the value when at the rated output current. It varies by the impedance at the power supply side (including those of the input reactor and cables).
*10 FR-DU08: IP40 (except for the PU connector section)

日正科技有限公司
購買、維修 此手冊零組件
電話： 037-466333
Email: service@repairtw.com
Line Id: @yzz4
www.repairtw.com

◆ 400 V class

Model FR-A840-[ ]			00023	00038	00052	00083	00126	00170	00250	00310	00380	00470	00620	00770	00930	01160	01800	02160	02600	03250	03610	04320	04810	05470	06100	06830
			0.4K	0.75K	1.5K	2.2K	3.7K	5.5K	7.5K	11K	15K	18.5K	22K	30K	37K	45K	55K	75K	90K	110K	132K	160K	185K	220K	250K	280K
Applicable motor capacity (kW) *1		SLD	0.75	1.5	2.2	3.7	5.5	7.5	11	15	18.5	22	30	37	45	55	75/ 90	110	132	160	185	220	250	280	315	355
		LD	0.75	1.5	2.2	3.7	5.5	7.5	11	15	18.5	22	30	37	45	55	75	90	110	132	160	185	220	250	280	315
		ND (initial setting)	0.4	0.75	1.5	2.2	3.7	5.5	7.5	11	15	18.5	22	30	37	45	55	75	90	110	132	160	185	220	250	280
		HD	0.2	0.4	0.75	1.5	2.2	3.7	5.5	7.5	11	15	18.5	22	30	37	45	55	75	90	110	132	160	185	220	250
Output	Rated capacity (kVA) *2	SLD	1.8	2.9	4	6.3	10	13	19	24	29	36	47	59	71	88	137	165	198	248	275	329	367	417	465	521
		LD	1.6	2.7	3.7	5.8	8.8	12	18	22	27	33	43	53	65	81	110	137	165	198	248	275	329	367	417	465
		ND (initial setting)	1.1	1.9	3	4.6	6.9	9.1	13	18	24	29	34	43	54	66	84	110	137	165	198	248	275	329	367	417
		HD	0.6	1.1	1.9	3	4.6	6.9	9.1	13	18	24	29	34	43	54	66	84	110	137	165	198	248	275	329	367
	Rated current (A) *3	SLD	2.3 (2)	3.8 (3.2)	5.2 (4.4)	8.3 (7.1)	12.6 (10.7)	17 (14.5)	25 (21.3)	31 (26.4)	38 (32.3)	47 (40)	62 (52.7)	77 (65.5)	93 (79.1)	116 (98.6)	180 (153)	216 (184)	260 (221)	325 (276)	361 (307)	432 (367)	481 (409)	547 (465)	610 (519)	683 (581)
		LD	2.1 (1.8)	3.5 (3)	4.8 (4.1)	7.6 (6.5)	11.5 (9.8)	16 (13.6)	23 (19.6)	29 (24.7)	35 (29.8)	43 (36.6)	57 (48.5)	70 (59.5)	85 (72.3)	106 (90.1)	144 (122)	180 (153)	216 (184)	260 (221)	325 (276)	361 (307)	432 (367)	481 (409)	547 (465)	610 (519)
		ND (initial setting)	1.5 (2.3)	2.5 (3.8)	4 (6)	6 (9)	9 (13.5)	12 (18)	17 (25.5)	23 (34.5)	31 (46.5)	38 (57)	44 (66)	57 (85.5)	71 (107)	86 (129)	110 (165)	144 (216)	180 (270)	216 (184)	260 (221)	325 (276)	361 (307)	432 (367)	481 (409)	547 (465)
		HD	0.8 (2.3)	1.5 (3.8)	2.5 (6)	4 (9)	6 (13.5)	9 (18)	12 (25.5)	17 (34.5)	23 (46.5)	31 (57)	38 (66)	44 (85.5)	57 (107)	71 (129)	86 (165)	110 (216)	144 (270)	180 (153)	216 (184)	260 (221)	325 (276)	361 (307)	432 (367)	481 (409)
	Overload current rating *4	SLD	110% 60 s, 120% 3 s (inverse-time characteristics) at surrounding air temperature 40°C																							
		LD	120% 60 s, 150% 3 s (inverse-time characteristics) at surrounding air temperature 50°C																							
		ND (initial setting)	150% 60 s, 200% 3 s (inverse-time characteristics) at surrounding air temperature 50°C																							
		HD	200% 60 s, 250% 3 s (inverse-time characteristics) at surrounding air temperature 50°C																							
	Rated voltage *5		Three-phase 380 to 500 V																							
	Regenerative braking	Brake transistor	Built-in															FR-BU2(Option)								
		Maximum brake torque *7	100% torque/2%ED *6							20% torque/continuous								10% torque/continuous								
		FR-ABR (when the option is used)	100% torque/10%ED							100% torque/6%ED				— *12				—	—	—	—	—	—	—	—	—
Power supply	Rated input AC voltage/frequency		Three-phase 380 to 500 V 50 Hz/60 Hz *11																							
	Permissible AC voltage fluctuation		323 to 550 V 50 Hz/60 Hz																							
	Permissible frequency fluctuation		±5%																							
	Rated input current (A) *8	SLD	3.2	5.4	7.8	10.9	16.4	22.5	31.7	40.3	48.2	58.4	76.8	97.6	115	141	180	216	260	325	361	432	481	547	610	683
		LD	3	4.9	7.3	10.1	15.1	22.3	31	38.2	44.9	53.9	75.1	89.7	106	130	144	180	216	260	325	361	432	481	547	610
		ND (initial setting)	2.3	3.7	6.2	8.3	12.3	17.4	22.5	31	40.3	48.2	56.5	75.1	91	108	134	144	180	216	260	325	361	432	481	547
		HD	1.4	2.3	3.7	6.2	8.3	12.3	17.4	22.5	31	40.3	48.2	56.5	75.1	91	108	110	144	180	216	260	325	361	432	481
	Power supply capacity (kVA) *9	SLD	2.5	4.1	5.9	8.3	12	17	24	31	37	44	59	74	88	107	137	165	198	248	275	329	367	417	465	521
		LD	2.3	3.7	5.5	7.7	12	17	24	29	34	41	57	68	81	99	110	137	165	198	248	275	329	367	417	465
		ND (initial setting)	1.7	2.8	4.7	6.3	9.4	13	17	24	31	37	43	57	69	83	102	110	137	165	198	248	275	329	367	417
		HD	1.1	1.7	2.8	4.7	6.3	9.4	13	17	24	31	37	43	57	69	83	84	110	137	165	198	248	275	329	367
Protective structure (IEC 60529) *10			Enclose type (IP20)											Open type (IP00)												
Cooling system			Self-cooling			Forced air cooling																				
Approx. mass (kg)			2.8	2.8	2.8	3.3	3.3	6.7	6.7	8.3	8.3	15	15	23	41	41	43	52	55	71	78	117	117	166	166	166

*1 The applicable motor capacity indicated is the maximum capacity applicable for use of the Mitsubishi 4-pole standard motor.
*2 The rated output capacity indicated assumes that the output voltage is 440 V for 400 V class.
*3 When an operation is performed with the carrier frequency set to 3 kHz or more, and the inverter output current reaches the value indicated in the parenthesis of the rated current, the carries frequency is automatically lowered. The motor noise becomes louder accordingly.
*4 The % value of the overload current rating indicated is the ratio of the overload current to the inverter's rated output current. For repeated duty, allow time for the inverter and motor to return to or below the temperatures under 100% load.
*5 The maximum output voltage does not exceed the power supply voltage. The maximum output voltage can be changed within the setting range. However, the maximum point of the voltage waveform at the inverter output side is the power supply voltage multiplied by about $\sqrt{2}$.
*6 Value by the built-in brake resistor
*7 Value for the ND rating
*8 The rated input current indicates a value at a rated output voltage. The impedance at the power supply side (including those of the input reactor and cables) affects the rated input current.
*9 The power supply capacity is the value when at the rated output current. It varies by the impedance at the power supply side (including those of the input reactor and cables).
*10 FR-DU08: IP40 (except for the PU connector section)
*11 For the power voltage exceeding 480 V, set **Pr.977 Input voltage mode selection**. .
*12 The braking capability of the inverter built-in brake can be improved with a commercial brake resistor. For the details, please contact your sales representative.

工作報有限公司
購買、維修 此手冊零組件
電話：03-3468338
Email: service@repairtw.com
Line id: mazzi
www.repairtw.com

8.2 Motor rating

(1) Vector control dedicated motor SF-V5RU (1500r/min series)

●200V class

Motor type SF-V5RU[ ]K		1	2	3	5	7	11	15	18	22	30	37	45	55
Applicable inverter model FR-A820-[ ]K		2.2	3.7	5.5	7.5	11	15	18.5	22	30	37	45	55	75
Rated output (kW)		1.5	2.2	3.7	5.5	7.5	11	15	18.5	22	30 *1	37 *1	45 *1	55
Rated torque (N•m)		9.55	14.1	23.6	35.0	47.7	70.0	95.5	118	140	191	235	286	350
Maximum torque 150% 60 s (N•m)		14.3	21.1	35.4	52.4	71.6	105	143	176	211	287	353	429	525
Rated speed (r/min)		1500												
Maximum speed (r/min)		3000 *2												2400
Frame No.		90L	100L	112M	132S	132M	160M	160L	180M	180M	200L	200L	200L	225S
Inertia moment J ($\times 10^{-4}$ kg•m^2)		67.5	105	175	275	400	750	875	1725	1875	3250	3625	3625	6850
Noise *5		75 dB or less									80 dB or less			85 dB or less
Cooling fan (with thermal protector) *7*8	Voltage	Single-phase 200 V/50 Hz Single-phase 200 V to 230 V/60 Hz					Three-phase 200 V/50 Hz Three-phase 200 to 230 V/60 Hz							
	Input *3	36/55 W (0.26/0.32 A)			22/28 W (0.11/0.13 A)		55/71 W (0.39/0.39 A)				100/156 W (0.47/0.53 A)			85/130 W (0.46/0.52 A)
	Recommended thermal setting	0.36 A			0.18 A		0.51 A				0.69 A			0.68 A
Surrounding air temperature, humidity		-10 to +40°C (non-freezing), 90%RH or less (non-condensing)												
Structure (Protective structure)		Totally enclosed forced draft system (Motor: IP44, cooling fan: IP23S) *4												
Detector		Encoder 2048P/R, A phase, B phase, Z phase +12 VDC power supply *6												
Equipment		Encoder, thermal protector, fan												
Heat resistance class		F												
Vibration rank		V10												
Approx. mass (kg)		24	33	41	52	62	99	113	138	160	238	255	255	320

上正科技有限公司
購買、維修 此手冊零組件
電話： 037-466333
Email: service@repairtw.com
Line id: @zzzz
www.repairtw.com

●400V class

Motor type SF-V5RUH[ ]K		1	2	3	5	7	11	15	18	22	30	37	45	55
Applicable inverter model FR-A840-[ ]K		2.2	2.2	3.7	7.5	11	15	18.5	22	30	37	45	55	75
Rated output (kW)		1.5	2.2	3.7	5.5	7.5	11	15	18.5	22	30 *1	37 *1	45 *1	55
Rated torque (N•m)		9.55	14.1	23.6	35.0	47.7	70.0	95.5	118	140	191	235	286	350
Maximum torque 150% 60 s (N•m)		14.3	21.1	35.4	52.4	71.6	105	143	176	211	287	353	429	525
Rated speed (r/min)		1500												
Maximum speed (r/min)		3000 *2												2400
Frame No.		90L	100L	112M	132S	132M	160M	160L	180M	180M	200L	200L	200L	225S
Inertia moment J ($\times 10^{-4}$ kg•m^2)		67.5	105	175	275	400	750	875	1725	1875	3250	3625	3625	6850
Noise *5		75 dB or less									80 dB or less			85 dB or less
Cooling fan (with thermal protector) *7*8	Voltage	Single-phase 200 V/50 Hz Single-phase 200 V to 230 V/60 Hz					Three-phase 380 to 400 V/50 Hz Three-phase 400 to 460 V/60 Hz							
	Input *3	36/55 W (0.26/0.32 A)			22/28 W (0.11/0.13 A)		55/71 W (0.19/0.19 A)				100/156 W (0.27/0.30 A)			85/130 W (0.23/0.26 A)
	Recommended thermal setting	0.36 A			0.18 A		0.25 A				0.39 A			0.34 A
Surrounding air temperature, humidity		-10 to +40°C (non-freezing), 90%RH or less (non-condensing)												
Structure (Protective structure)		Totally enclosed forced draft system (Motor: IP44, cooling fan: IP23S) *4												
Detector		Encoder 2048P/R, A phase, B phase, Z phase +12 VDC power supply *6												
Equipment		Encoder, thermal protector, fan												
Heat resistance class		F												
Vibration rank		V10												
Approx. mass (kg)		24	33	41	52	62	99	113	138	160	238	255	255	320

*1 80% output in the high-speed range. (The output is reduced when the speed is 2400 r/min or more. Contact us separately for details.)
*2 A dedicated motor of 3.7 kW or less can be run at the maximum speed of 3600 r/min. Consult our sales office when using the motor at the maximum speed.
*3 Power (current) at 50 Hz/60 Hz.
*4 Since a motor with brake has a window for gap check, the protective structure of both the cooling fan section and brake section is IP20. S of IP23S is an additional code indicating the condition that protection from water intrusion is established only when a cooling fan is not operating.
*5 The value when high carrier frequency is set (**Pr.72** = 6, **Pr.240** = 0).
*6 The 12 V power supply is required as the power supply for the encoder.
*7 The cooling fan is equipped with a thermal protector. The cooling fan stops when the coil temperature exceeds the specified value in order to protect the fan motor. A restrained cooling fan or degraded fan motor insulation could be causes for the rise in coil temperature.The cooling fan re-starts when the coil temperature drops to normal.
*8 The cooling fan voltage and input values are the basic specifications of the cooling fan alone and free air values. The input value becomes slightly larger when it is rotated by this motor due to an increased workload, but the cooling fan can be used as it is.When preparing a thermal relay at the user side, use the recommended thermal setting.

(2) Vector control dedicated motor SF-THY

Motor type			SF-THY							
Applicable inverter			FR-A820-[ ]K	FR-A840-[ ]K						
			90	90	110	132	160	185	220	280
Rated output (kW)			75	75	90	110	132	160	200	250
Rated torque (N·m)			477	477	572	700	840	1018	1273	1591
Maximum torque 150%60 s (N·m)			715	715	858	1050	1260	1527	1909	2386
Rated speed (r/min)			1500	1500						
Maximum speed (r/min)			2400	2400	1800					
Frame No.			250MD	250MD	250MD	280MD	280MD	280MD	280L	315H
Inertia moment J (kg·m^2)			1.1	1.1	1.7	2.3	2.3	4.0	3.8	5.0
Noise			90 dB	90 dB			95 dB			
Cooling fan	Voltage		Three-phase, 200 V/50 Hz, 200 V/60 Hz, 220 V/60 Hz (400 V class cooling fan is available upon order)							
	Input (W)	50 Hz	750	400	400	400	400	400	750	750
		60 Hz		750	750	750	750	750	1500	1500
Approx. mass (kg)			610	610	660	870	890	920	1170	1630
Common specifications	Surrounding air temperature, humidity		-10 to +40°C (non-freezing), 90%RH or less (non-condensing)							
	Structure		Totally enclosed forced draft system							
	Detector		Encoder 2048P/R, A phase, B phase, Z phase +12 VDC power supply *1							
	Equipment		Encoder, thermal protector*2, fan							
	Insulation		Class F							
	Vibration rank		V10							
	Dedicated encoder	Resolution	2048 pulse/rev							
		Power supply voltage	12 VDC±10%							
		Current consumption	90 mA							
		Output signal form	A, B phases (90° phase shift) Z phase: 1 pulse/rev							
		Output circuit	Complementary (constant voltage output matched by emitter follow)							
		Output voltage	"H" level: Power supply voltage 9 V or more (I_{OH}: -20 mA) "L" level: Power supply voltage 3 V or less (I_{OL}: 20 mA)							

*1 The 12 V power supply or the control terminal option (FR-A7PS) is required as the power supply for the encoder.

*2 A motor with a thermal protector is also available. Contact your sales representative.

上正科技有限公司
購買、維修 此手冊零組件
電話： 037-466333
email: service@repair.tw.com
Line id: @222
www.repair.tw.com

(3) IPM motor MM-CF (2000r/min series)

Motor type MM-CF[ ]		52(C)(B)	102(C)(B)	152(C)(B)	202(C)(B)	352(C)(B)	502(C)	702(C)
Applicable inverter FR-A820[ ]K	SLD	0.4	0.4	0.75	1.5	2.2	3.7	5.5
	LD	0.4	0.4	0.75	1.5	2.2	3.7	5.5
	ND (initial setting)	0.4	0.75	1.5	2.2	3.7	5.5	7.5
	HD	0.75*6	1.5*6	2.2*6	3.7*6	5.5*6	7.5*6	11*6
Continuous characteristics*1	Rated output[kW]	0.5	1.0	1.5	2.0	3.5	5.0	7.0
	Rated torque[N·m]	2.39	4.78	7.16	9.55	16.70	23.86	33.41
Rated speed*1[r/min]		2000						
Max. speed [r/min]		3000						
Instantaneous permissible speed [r/min]		3450						
Maximum torque [N·m]		4.78	9.56	14.32	19.09	33.41	47.73	66.82
Inertia moment J*5 [×10^{-4} kg·m^2]		6.6 (7.0)	13.7 (14.9)	20.0 (21.2)	45.5 (48.9)	85.6 (89.0)	120.0	160.0
Recommended ratio of load inertia moment to motor shaft inertia moment*2		100 times max.			50 times max.			
Rated current [A]		1.81	3.70	5.22	7.70	12.5	20.5	27.0
Insulation rank		Class F						
Structure		Totally-enclosed, self-cooling (protective system:IP44 *3, IP65 *3*4)						
Surrounding air temperature, humidity		-10°C to +40°C (non-freezing), 90%RH or less (non-condensing)						
Storage temperature and humidity		-20°C to +70°C (non-freezing), 90%RH or less (non-condensing)						
Ambience		Indoors (no direct sunlight), free from corrosive gas, flammable gas, oil mist, dust and dirt						
Altitude		Max. 1000 m above sea level						
Vibration		X: 9.8 m/s^2, Y: 24.5 m/s^2						
Mass [kg]*5		5.1 (7.8)	7.2 (11)	9.3 (13)	13 (20)	19 (28)	27	36

*1 When the power supply voltage drops, we cannot guarantee the above output and rated speed.
*2 When the load torque is 20% of the motor rating. The permissible load inertia moment ratio is smaller when the load torque is larger. Consult us if the load inertia moment ratio exceeds the above value.
*3 This does not apply to the shaft through portion.
*4 Value for MM-CF[ ]2C.
*5 The value for MM-CF[ ]2B is indicated in parentheses.
*6 Applicable one-rank higher inverters for the lifted low-speed range torque operation. PM sensorless vector control specification

上立科技有限公司
購買、維修 此手冊零組件
電話： 037-466333
Email: service@repairtw.com
Line id: @zzzz
www.repairtw.com

8.3 Common specifications

Control specifications	Control method		Soft-PWM control, high carrier frequency PWM control (selectable among V/F control, Advanced magnetic flux vector control, Real sensorless vector control), vector control*1, and PM sensorless vector control
	Output frequency range		0.2 to 590 Hz (The upper-limit frequency is 400 Hz under Advanced magnetic flux vector control, Real sensorless vector control, vector control*1, and PM sensorless vector control.)
	Frequency setting resolution	Analog input	0.015 Hz/60 Hz (0 to 10 V/12 bits for terminals 2 and 4) 0.03 Hz/60 Hz (0 to 5 V/11 bits or 0 to 20 mA/approx. 11 bits for terminals 2 and 4, 0 to ±10 V/12 bits for terminal 1) 0.06 Hz/60 Hz (0 to ±5 V/11 bits for terminal 1)
		Digital input	0.01 Hz
	Frequency accuracy	Analog input	Within ±0.2% of the max. output frequency (25°C ± 10°C)
		Digital input	Within 0.01% of the set output frequency
	Voltage/frequency characteristics		Base frequency can be set from 0 to 590 Hz. Constant-torque/variable-torque pattern or adjustable 5 points V/F can be selected.
	Starting torque*6		SLD rating: 120% 0.3 Hz, LD rating: 150% 0.3 Hz, ND rating: 200%*7 0.3 Hz, HD rating: 250% 0.3 Hz (under Real sensorless vector control or vector control*1)
	Torque boost		Manual torque boost
	Acceleration/deceleration time setting		0 to 3600 s (acceleration and deceleration can be set individually), linear or S-pattern acceleration/deceleration mode, backlash countermeasures acceleration/deceleration can be selected.
	DC injection brake (induction motor)		Operation frequency (0 to 120 Hz), operation time (0 to 10 s), operation voltage (0 to 30%) variable
	Stall prevention operation level		Activation range of stall prevention operation (SLD rating: 0 to 120%, LD rating: 0 to 150%, ND rating: 0 to 220%, HD rating: 0 to 280%). Whether to use the stall prevention or not can be selected
	Torque limit level		Torque limit value can be set (0 to 400% variable).
Operation specifications	Frequency setting signal	Analog input	Terminals 2 and 4: 0 to 10 V, 0 to 5 V, 4 to 20 mA (0 to 20 mA) are available. Terminal 1: -10 to +10 V, -5 to +5 V are available.
		Digital input	Input using the setting dial of the operation panel or parameter unit Four-digit BCD or 16-bit binary (when used with option FR-A8AX)
	Start signal		Forward and reverse rotation or start signal automatic self-holding input (3-wire input) can be selected.
	Input signals (twelve terminals)		Low-speed operation command, Middle-speed operation command, High-speed operation command, Second function selection, Terminal 4 input selection, Jog operation selection, Electronic bypass function, Output stop, Start self-holding selection, Forward rotation command, Reverse rotation command, Inverter reset
	Pulse train input		100 kpps
	Operational functions		Maximum and minimum frequency settings, multi-speed operation, acceleration/deceleration pattern, thermal protection, DC injection brake, starting frequency, JOG operation, output stop (MRS), stall prevention, regeneration avoidance, increased magnetic excitation deceleration, DC feeding, frequency jump, rotation display, automatic restart after instantaneous power failure, electronic bypass sequence, remote setting, automatic acceleration/deceleration, intelligent mode, retry function, carrier frequency selection, fast-response current limit, forward/reverse rotation prevention, operation mode selection, slip compensation, droop control, load torque high-speed frequency control, speed smoothing control, traverse, auto tuning, applied motor selection, gain tuning, machine analyzer*1, RS-485 communication, PID control, PID pre-charge function, easy dancer control, cooling fan operation selection, stop selection (deceleration stop/coasting), power-failure deceleration stop function, stop-on-contact control, PLC function, life diagnosis, maintenance timer, current average monitor, multiple rating, orientation control*1, speed control, torque control, position control, pre-excitation, torque limit, test run, 24 V power supply input for control circuit, safety stop function, vibration control
	Output signal Open collector output (five terminals) Relay output (two terminals)		Inverter running, Up to frequency, Instantaneous power failure/undervoltage, Overload warning, Output frequency detection, Fault Fault codes of the inverter can be output (4 bits) from the open collector.
	Pulse train output		50 kpps
Indication	For meter	Pulse train output (FM type)	Max. 2.4 kHz: one terminal (output frequency) The monitored item can be changed using **Pr.54 FM/CA terminal function selection.**
		Current output (CA type)	Max. 20 mADC: one terminal (output current) The monitored item can be changed using **Pr.54 FM/CA terminal function selection.**
		Voltage output	Max. 10 VDC: one terminal (output voltage) The monitored item can be changed using **Pr.158 AM terminal function selection**.
	Operation panel (FR-DU08)	Operating status	Output frequency, Output current, Output voltage, Frequency setting value The monitored item can be changed using **Pr.52 Operation panel main monitor selection**.
		Fault record	Fault record is displayed when a fault occurs. Past 8 fault records and the conditions immediately before the fault (output voltage/current/frequency/cumulative energization time/year/month/date/time) are saved.

上正科技有限公司
購買、維修 此手冊零組件
電話：037-466333
Email: service@repairtw.com
Line id: @zzzz
www.repairtw.com

Common specifications

Protective/ warning function	Protective function	Overcurrent trip during acceleration, Overcurrent trip during constant speed, Overcurrent trip during deceleration or stop, Regenerative overvoltage trip during acceleration, Regenerative overvoltage trip during constant speed, Regenerative overvoltage trip during deceleration or stop, Inverter overload trip, Motor overload trip, Heatsink overheat, Instantaneous power failure, Undervoltage, Input phase loss*5, Stall prevention stop, Loss of synchronism detection*5, Brake transistor alarm detection, Output side earth (ground) fault overcurrent, Output phase loss, External thermal relay operation*5, PTC thermistor operation*5, Option fault, Communication option fault, Parameter storage device fault, PU disconnection, Retry count excess*5, Parameter storage device fault, CPU fault, Operation panel power supply short circuit RS-485 terminals power supply short circuit, 24 VDC power fault, Abnormal output current detection*5, Inrush current limit circuit fault, Communication fault (inverter), Analog input fault, USB communication fault, Safety circuit fault, Overspeed occurrence*5, Speed deviation excess detection*1*5, Signal loss detection*1*5, Excessive position fault*1*5, Brake sequence fault*5, Encoder phase fault*1*5, 4 mA input fault*5, Pre-charge fault*5, PID signal fault*5, Option fault, Opposite rotation deceleration fault*5, Internal circuit fault, Abnormal internal temperature*8
	Warning function	Fan alarm, Stall prevention (overcurrent), Stall prevention (overvoltage), Regenerative brake pre-alarm*5, Electronic thermal relay function pre-alarm, PU stop, Speed limit indication*5, Parameter copy, Safety stop, Maintenance signal output*5, USB host error, Home position return setting error*5, Home position return uncompleted*5, Home position return parameter setting error*5, Operation panel lock*5, Password locked*5, Parameter write error, Copy operation error, 24 V external power supply operation, Internal-circulation fan alarm*8
Environment	Surrounding air temperature	-10°C to +50°C (non-freezing) (LD, ND, HD ratings) -10°C to +40°C (non-freezing) (SLD rating)
	Surrounding air humidity	With circuit board coating: 95% RH or less (non-condensing), Without circuit board coating: 90% RH or less (non-condensing)
	Storage temperature*2	-20°C to +65°C
	Atmosphere	Indoors (without corrosive gas, flammable gas, oil mist, dust and dirt, etc.)
	Altitude/vibration	Maximum 1000 m above sea level *3, 5.9 m/s^2*4 or less*4 at 10 to 55 Hz (directions of X, Y, Z axes)

*1 Available only when the option (FR-A8AP) is mounted.

*2 Temperature applicable for a short time, e.g. in transit.

*3 For the installation at an altitude above 1,000 m up to 2,500 m, derate the rated current 3% per 500 m.

*4 2.9m/s^2 or less for the FR-A840-04320(160K) or higher.

*5 This protective function is not available in the initial status.

*6 For PM sensorless vector control, refer to **page 690**.

*7 The initial value is 150% for the FR-A820-00340(5.5K) or higher and the FR-A840-00170(5.5K) or higher.

*8 Available for the IP55 compatible model only.

上正科技有限公司
購買、維修 此手冊零組件
電話： 037-466333
Email: service@repairtw.com
Line id: @zzzz
www.repairtw.com

8.4 Outline dimension drawings

8.4.1 Inverter outline dimension drawings

FR-A820-00046(0.4K), FR-A820-00077(0.75K)

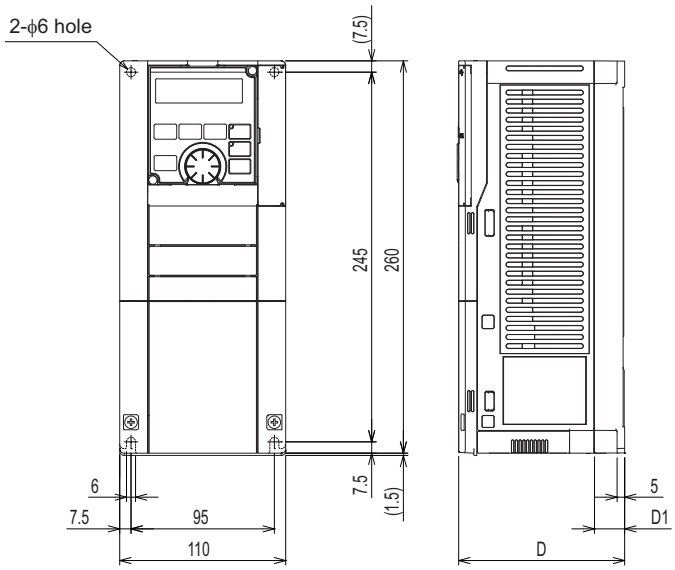

Inverter Model	D	D1
FR-A820-00046(0.4K)	110	20
FR-A820-00077(0.75K)	125	35

上正科技有限公司
購買、維修 此手冊零組件
電話： 037-466333
Email: service@repairtw.com
Line id: @zzzz
www.repairtw.com

(Unit: mm)

FR-A820-00105(1.5K), 00167(2.2K), 00250(3.7K)
FR-A840-00023(0.4K), 00038(0.75K), 00052(1.5K), 00083(2.2K), 00126(3.7K)

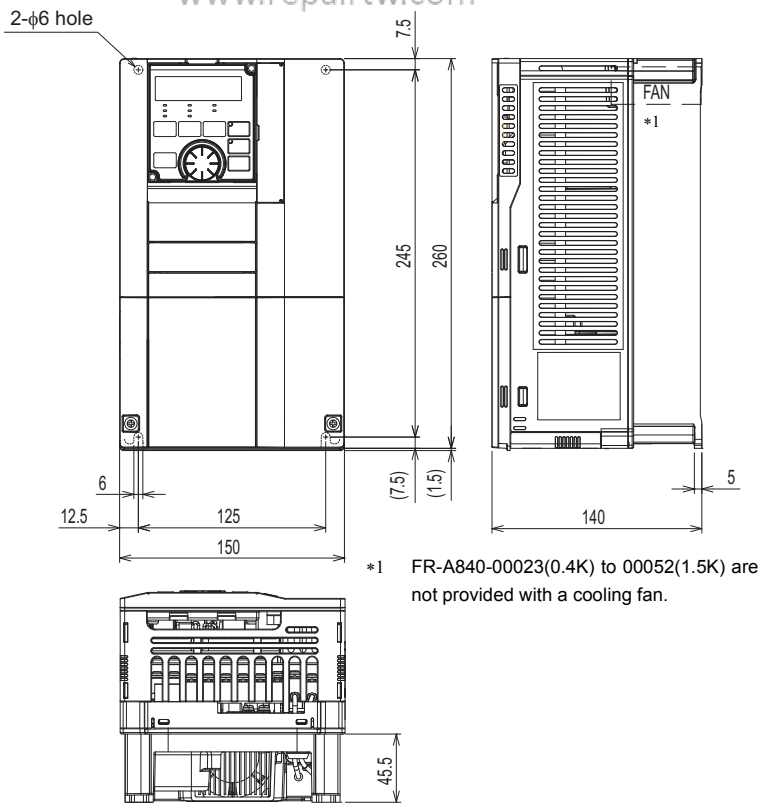

*1 FR-A840-00023(0.4K) to 00052(1.5K) are not provided with a cooling fan.

(Unit: mm)

Outline dimension drawings

FR-A820-00340(5.5K), 00490(7.5K), 00630(11K)
FR-A840-00170(5.5K), 00250(7.5K), 00310(11K), 00380(15K)

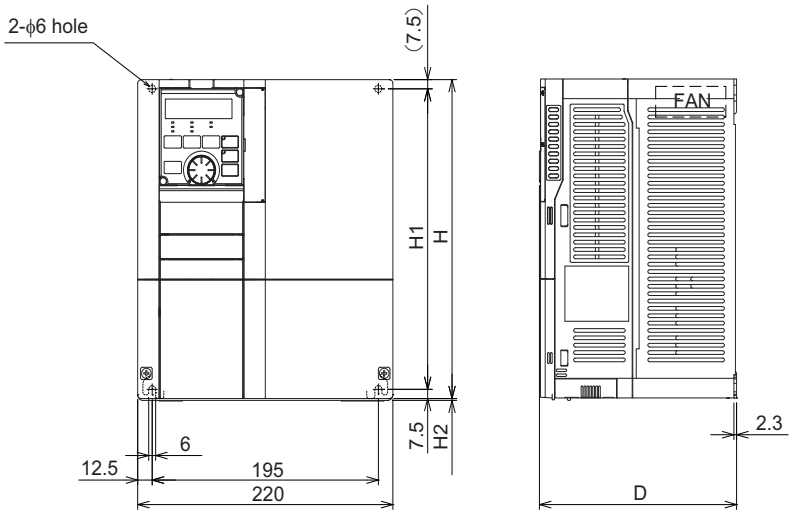

Inverter Model	H	H1	H2	D	D1
FR-A820-00340(5.5K), 00490(7.5K) FR-A840-00170(5.5K), 00250(7.5K)	260	245	1.5	170	84
FR-A820-00630(11K) FR-A840-00310(11K), 00380(15K)	300	285	3	190	101.5

上正科技有限公司
購買、維修 此手冊零組件
電話： 037-466333
Email: service@repairtw.com
Line id: @zzzz
www.repairtw.com

(Unit: mm)

FR-A820-00770(15K), 00930(18.5K), 01250(22K)
FR-A840-00470(18.5K), 00620(22K)

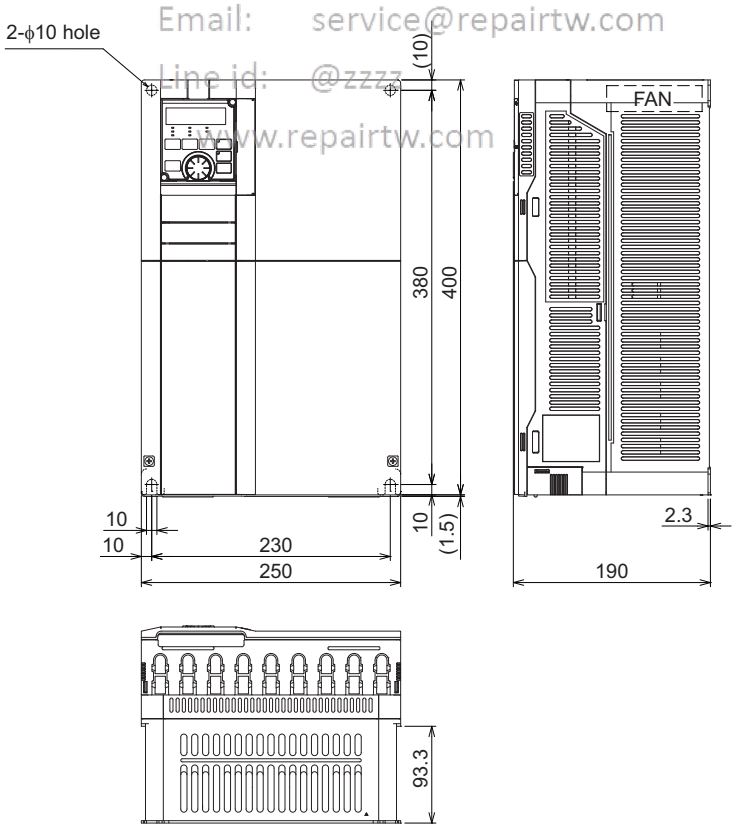

(Unit: mm)

FR-A820-01540(30K), 01870(37K), 02330(45K), 03160(55K), 03800(75K), 04750(90K)
FR-A840-00770(30K), 00930(37K), 01160(45K), 01800(55K), 02160(75K), 02600(90K)

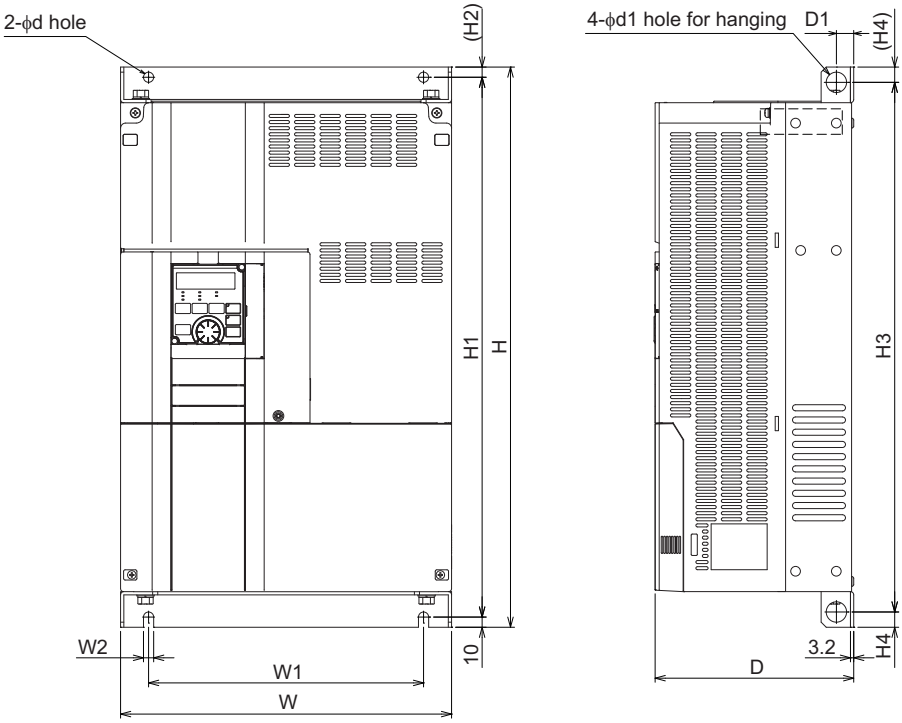

Inverter Model	W	W1	W2	H	H1	H2	H3	H4	d	d1	D	D1
FR-A820-01540(30K) FR-A840-00770(30K)	325	270	10	550	530	10	520	15	10	20	195	17
FR-A820-01870(37K), 02330(45K) FR-A840-00930(37K), 01160(45K), 01800(55K)	435	380	12	550	525	15	514	18	12	25	250	24
FR-A820-03160(55K)	465	410	12	700	675	15	664	18	12	25	250	22
FR-A820-03800(75K), 04750(90K)	465	400	12	740	715	15	704	18	12	24	360	22
FR-A840-02160(75K), 02600(90K)	465	400	12	620	595	15	584	18	12	24	300	22

(Unit: mm)

上正科技有限公司
購買、維修此手冊零組件
電話： 037-466333
Email: service@repairtw.com
Line id: @zzz
www.repairtw.com

FR-A840-03250(110K), 03610(132K)

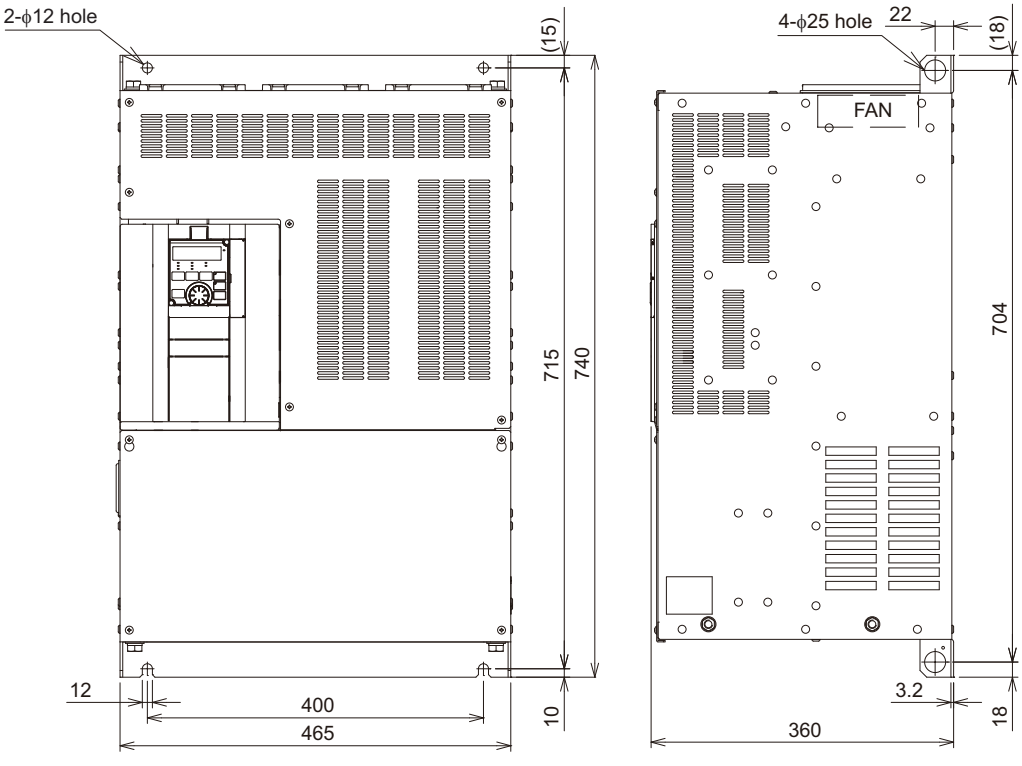

(Unit: mm)

Outline dimension drawings

FR-A840-04320(160K), 04810(185K)

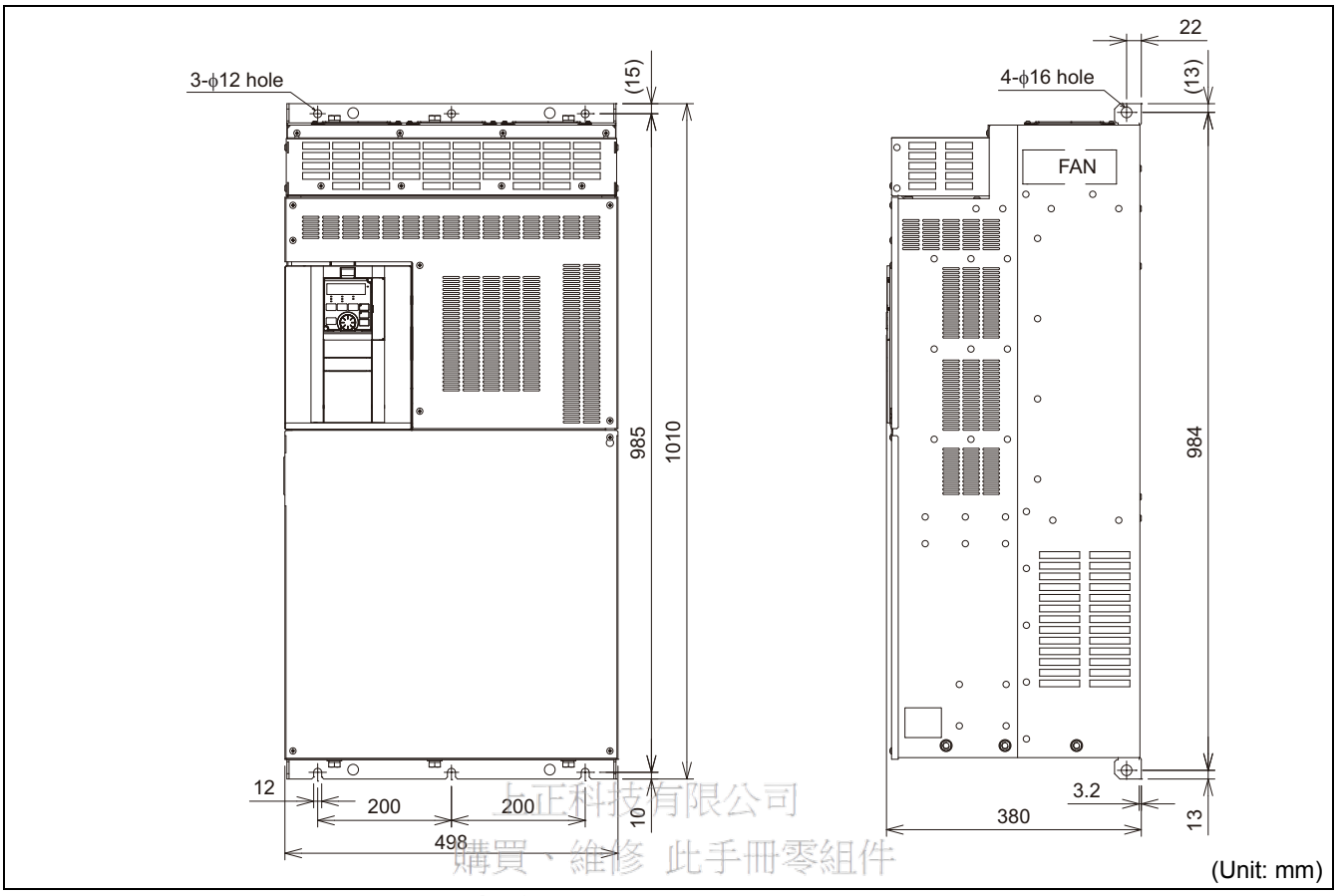

上正科技有限公司
購買、維修 此手冊零組件
電話： 037-466333
Email: service@repairtw.com
Line id: @zzzz
www.repairtw.com

FR-A840-05470(220K), 06100(250K), 06830(280K)

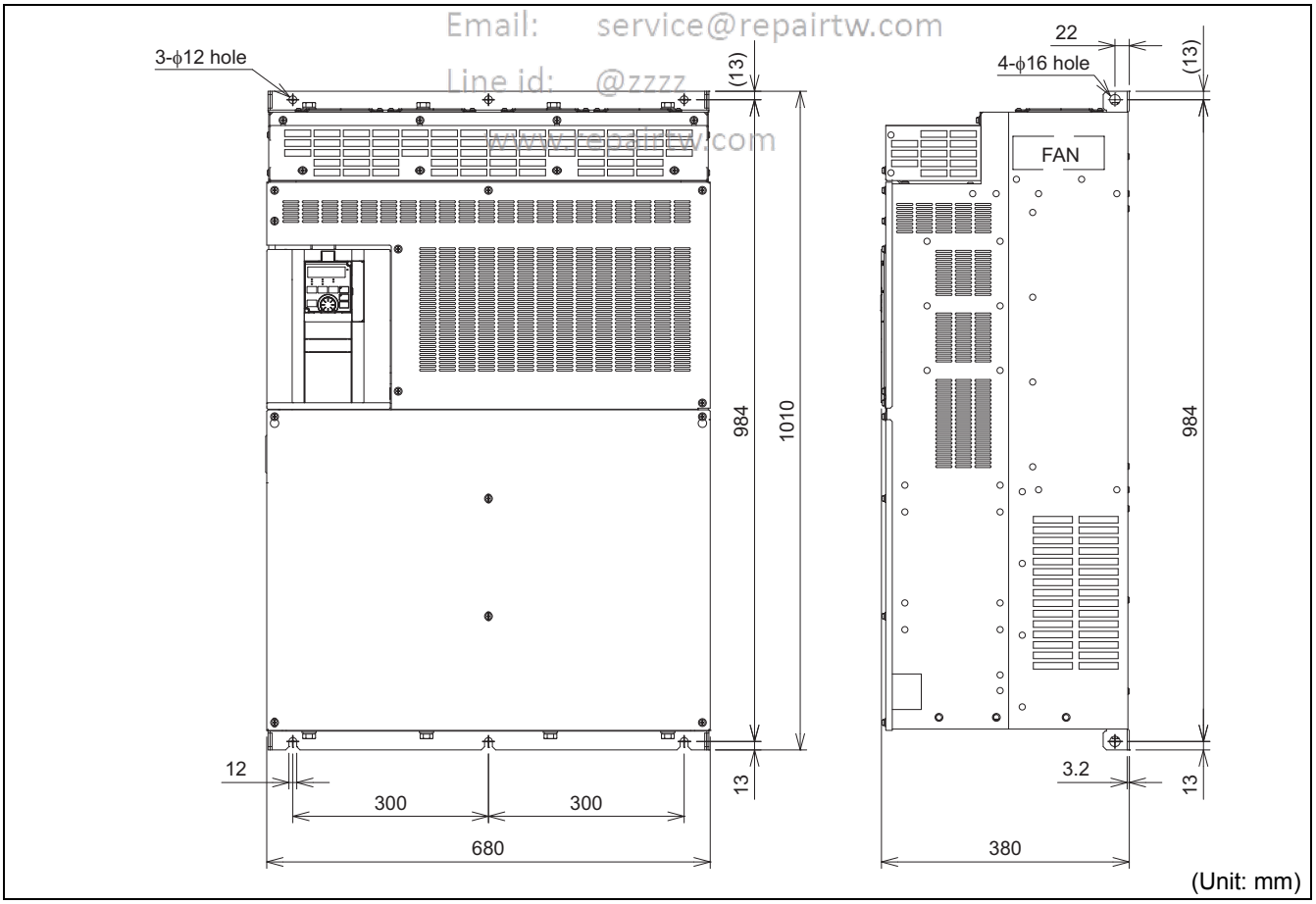

Operation panel (FR-DU08)

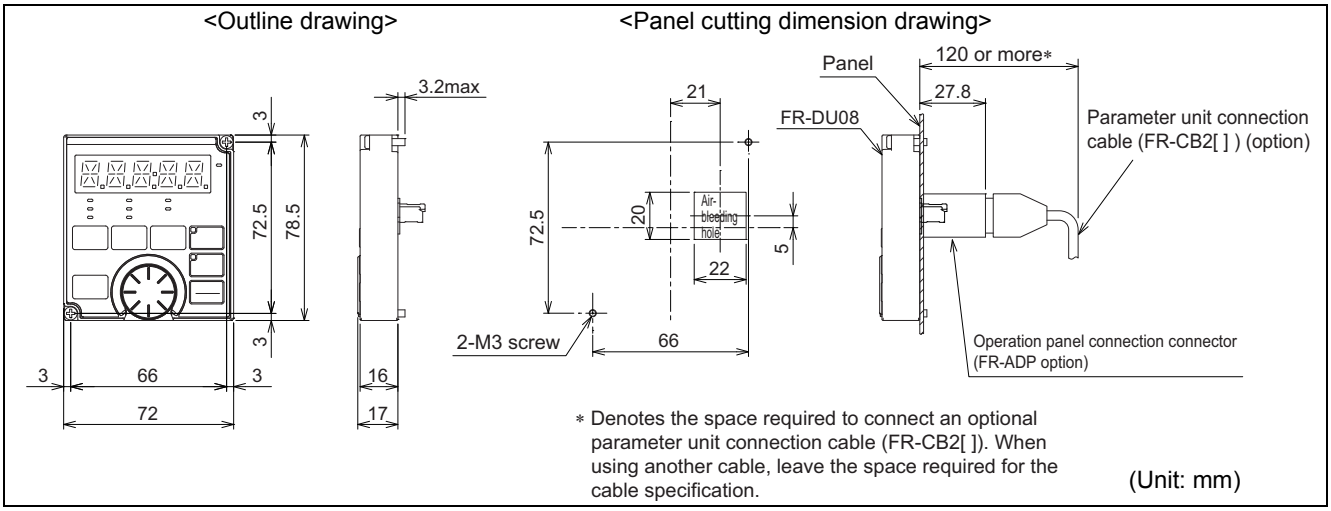

上正科技有限公司
購買、維修 此手冊零組件
電話： 037-466333
Email: service@repairtw.com
Line id: @zzzz
www.repairtw.com

8.4.2 Dedicated motor outline dimension drawings

Dedicated motor (SF-V5RU(H)) outline dimension drawings (standard horizontal type)

Frame Number 90L
SF-V5RU(H) 1K

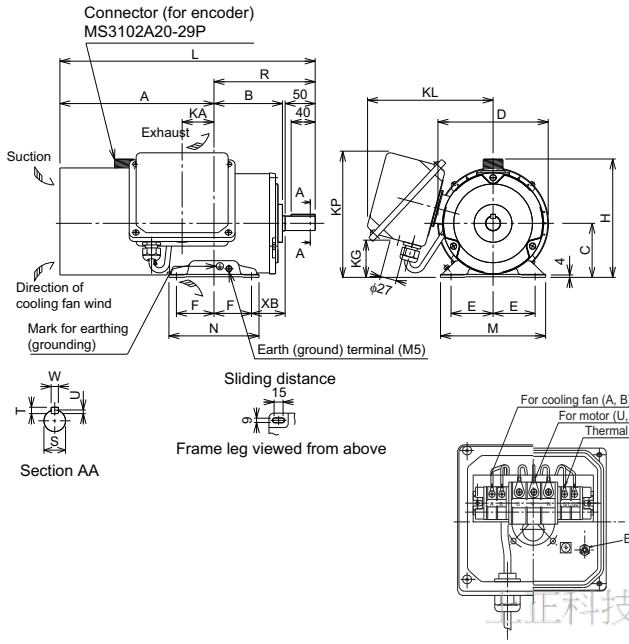

Frame Number 100L, 112M, 132S, 132M
SF-V5RU(H) 2K, 3K, 5K, 7K

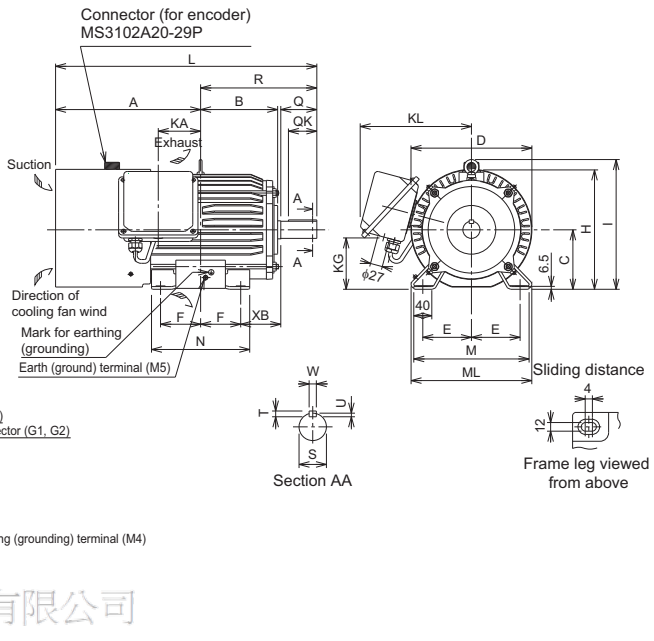

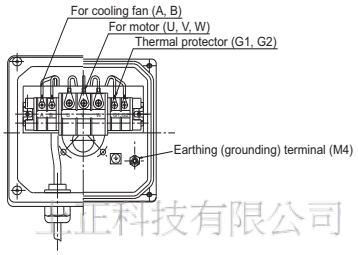

電正科技有限公司
購買、維修 此手冊零組件
電話： 037-466333
Email: service@repairtw.com
Line Id: @zzzz
www.repairtw.com

Frame Number 160M, 160L, 180M, 180L
SF-V5RU(H) 11K, 15K, 18K, 22K

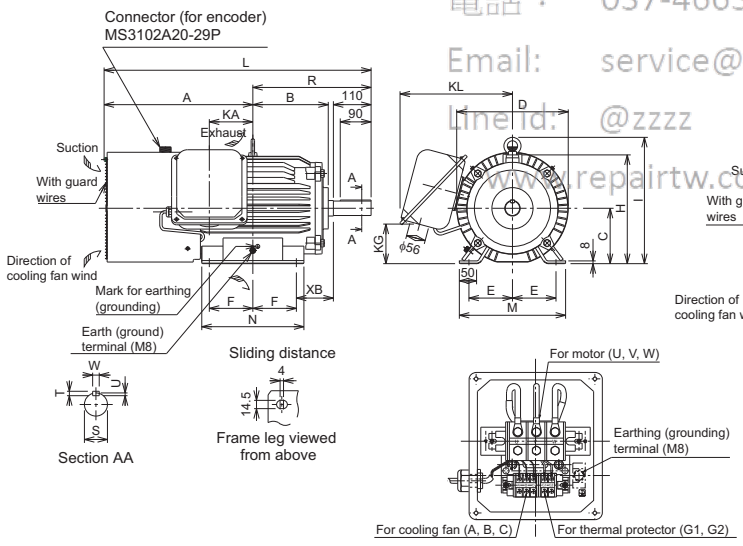

Frame Number 200L, 225S
SF-V5RU(H) 30K, 37K, 45K, 55K

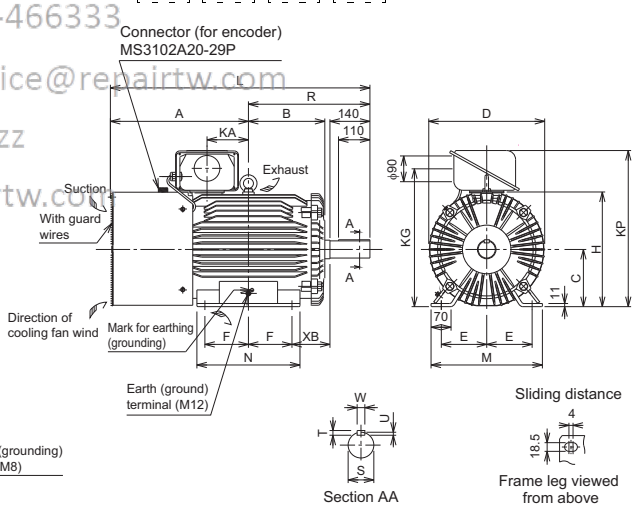

Make sure to earth the earth terminal of the frame installation foot as well as the earth terminal in the terminal box.

Dimensions table

(Unit: mm)

SF-V5RU □K	SF-V5RU □K1	SF-V5RU □K3	SF-V5RU □K4	Frame No.	Mass (kg)	Motor																						Terminal Screw Size		
						A	B	C	D	E	F	H	I	KA	KG	KL(KP)	L	M	ML	N	XB	Q	QK	R	S	T	U	W	U,V,W	A,B,(C)	G1,G2
1	—	—	—	90L	24	256.5	114	90	183.6	70	62.5	198	—	53	65	220(210)	425	175	—	150	56	—	—	168.5	24j6	7	4	8	M6	M4	M4
2	1	—	—	100L	33	284	128	100	207	80	70	203.5	230	65	78	231	477	200	212	180	63	60	45	193	28j6	7	4	8	M6	M4	M4
3	2	1	—	112M	41	278	135	112	228	95	70	226	253	69	93	242	478	230	242	180	70	60	45	200	28j6	7	4	8	M6	M4	M4
5	3	2	—	132S	52	303	152	132	266	108	70	265	288	75	117	256	542	256	268	180	89	80	63	239	38k6	8	5	10	M6	M4	M4
7	5	3	1	132M	62	322	171	132	266	108	89	265	288	94	117	256	580	256	268	218	89	80	63	258	38k6	8	5	10	M6	M4	M4
11	7	5	2	160M	99	412	198	160	318	127	105	316	367	105	115	330	735	310	—	254	108	—	—	323	42k6	8	5	12	M8	M4	M4
15	11	7	3	160L	113	434	220	160	318	127	127	316	367	127	115	330	779	310	—	298	108	—	—	345	42k6	8	5	12	M8	M4	M4
18	—	—	—	180M	138	438.5	225.5	180	363	139.5	120.5	359	410	127	139	352	790	335	—	285	121	—	—	351.5	48k6	9	5.5	14	M8	M4	M4
22	15	11	—		160																									
—	18	15	5	180L	200	457.5	242.5	180	363	139.5	139.5	359	410	146	139	352	828	335	—	323	121	—	—	370.5	55m6	10	6	16	M8	M4	M4
30	—	—	7	200L	238	483.5	267.5	200	406	159	152.5	401	—	145	487	(546)	909	390	—	361	133	—	—	425.5	60m6	11	7	18	M10	M4	M4
37, 45	22, 30	18, 22	—		255																									
55	37	30	11, 15	225S	320	500	277	225	446	178	143	446	—	145	533	(592)	932	428	—	342	149	—	—	432	65m6	11	7	18	M10	M4	M4

Note) 1. Install the motor on the floor and use it with the shaft horizontal.
2. Leave an enough clearance between the fan suction port and wall to ensure adequate cooling.
Also, check that the ventilation direction of a fan is from the opposite load side to the load side.
3 The size difference of top and bottom of the shaft center height is $^{0}_{-0.5}$
4 The 400V class motor has -H at the end of its type name.

Dedicated motor (SF-V5RU(H)) outline dimension drawings (standard horizontal type with brake)

Frame Number 90L
SF-V5RU(H) 1KB

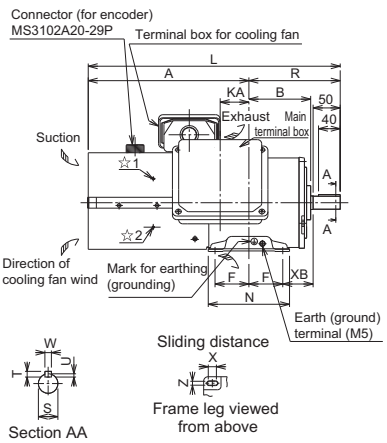

Frame Number 100L, 112M, 132S, 132M
SF-V5RU(H) 2KB, 3KB, 5KB, 7KB

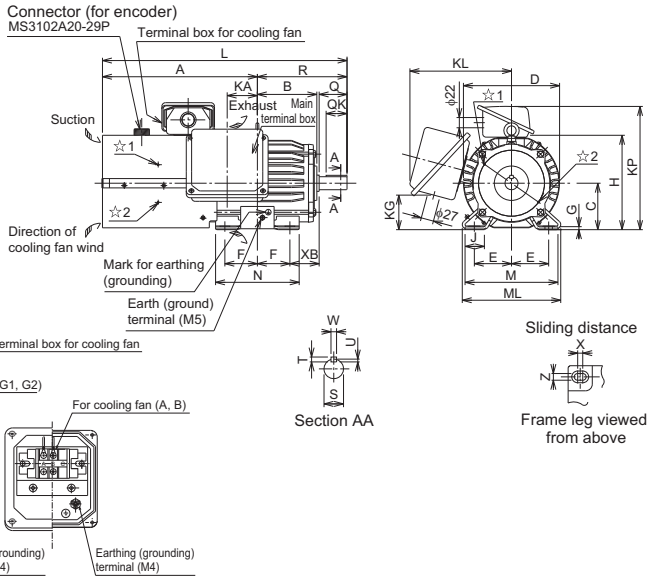

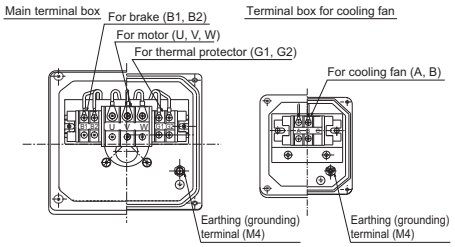

Frame Number 160M, 160L, 180M, 180L
SF-V5RU(H) 11KB, 15KB, 18KB, 22KB

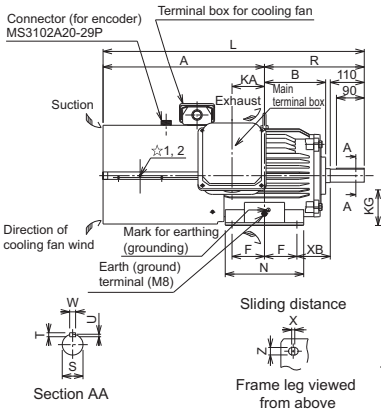

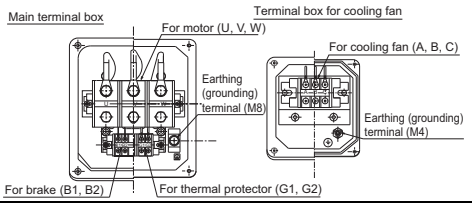

Frame Number 200L, 225S
SF-V5RU(H) 30KB, 37KB, 45KB, 55KB

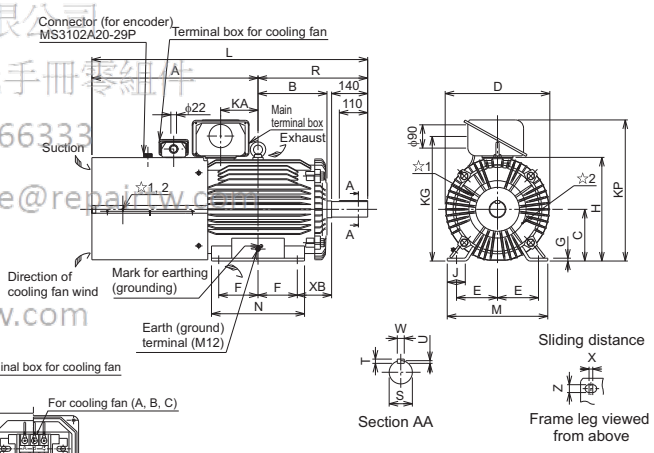

上正科技有限公司
購買、維修 此手冊零組件
電話 037-466333
email: service@repairtw.com
Line Id: @zzzz
www.repairtw.com

☆ indicates an inserting position of a bolt with hex head holes for manual opening.
Make sure to earth the earth terminal of the frame installation foot as well as the earth terminal in the terminal box.

Dimensions table

(Unit: mm)

SF-V5RU □KB	SF-V5RU □K1B	SF-V5RU □K3B	SF-V5RU □K4B	Frame No.	Mass (kg)	Motor																						Shaft End							Terminal Screw Size			
						A	B	C	D	E	F	G	H	I	J	KA	KD	KG	KL	KP	L	M	ML	N	X	XB	Z	Q	QK	R	S	T	U	W	U,V,W	A,B,[C]	G1,G2	B1,B2
1	—	—	—	90L	29	296.5	114	90	183.6	70	62.5	4	—	—	—	53	27	65	220	245	465	175	—	150	15	56	9	50	40	168.5	24j6	7	4	8	M6	M4	M4	M4
2	1	—	—	100L	46	333.5	128	100	207	80	70	6.5	—	—	40	65	27	78	231	265	526.5	200	212	180	4	63	12	60	45	193	28j6	7	4	8	M6	M4	M4	M4
3	2	1	—	112M	53	355	135	112	228	95	70	6.5	—	—	40	69	27	93	242	290	555	230	242	180	4	70	12	60	45	200	28j6	7	4	8	M6	M4	M4	M4
5	3	2	—	132S	70	416	152	132	266	108	70	6.5	—	—	40	75	27	117	256	329	655	256	268	180	4	89	12	80	63	239	38k6	8	5	10	M6	M4	M4	M4
7	5	3	1	132M	80	435	171	132	266	108	89	6.5	—	—	40	94	27	117	256	329	693	256	268	218	4	89	12	80	63	258	38k6	8	5	10	M6	M4	M4	M4
11	7	5	2	160M	140	522.5	198	160	318	127	105	8	—	—	50	105	56	115	330	391	845.5	310	—	254	4	108	14.5	110	90	323	42k6	8	5	12	M8	M4	M4	M4
15	11	7	3	160L	155	544.5	220	160	318	127	127	8	—	—	50	127	56	115	330	391	889.5	310	—	298	4	108	14.5	110	90	345	42k6	8	5	12	M8	M4	M4	M4
18	—	—	—	180M	185	568.5	225.5	180	363	139.5	120.5	8	—	—	50	127	56	139	352	428	920	335	—	285	4	121	14.5	110	90	351.5	48k6	9	5.5	14	M8	M4	M4	M4
22	15	11	—		215																																	
—	18	15	5	180L	255	587.5	242.5	180	363	139.5	139.5	8	—	—	50	146	56	139	352	428	958	335	—	323	4	121	14.5	110	90	370.5	55m6	10	6	16	M8	M4	M4	M4
30	—	—	7	200L	305	644.5	267.5	200	406	159	152.5	11	—	—	70	145	90	487	—	546	1070	390	—	361	4	133	18.5	140	110	425.5	60m6	11	7	18	M10	M4	M4	M4
37, 45	22, 30	18, 22	—		330																																	
55	37	30	11, 15	225S	395	659	277	225	446	178	143	11	—	—	70	145	90	533	—	592	1091	428	—	342	4	149	18.5	140	110	432	65m6	11	7	18	M10	M4	M4	M4

Note) 1. Install the motor on the floor and use it with the shaft horizontal.
2. Leave an enough clearance between the fan suction port and wall to ensure adequate cooling.
Also, check that the ventilation direction of a fan is from the opposite load side to the load side.
3 The size difference of top and bottom of the shaft center height is $^{0}_{-0.5}$
4 The 400V class motor has -H at the end of its type name.
5. Since a brake power device is a stand-alone, install it inside the enclosure.
(This device should be arranged at the customer side. Refer to the FR-A800 catalog.)

Outline dimension drawings

Dedicated motor (SF-V5RU(H)) outline dimension drawings (flange type)

Frame Number 90L
SF-V5RUF(H) 1K

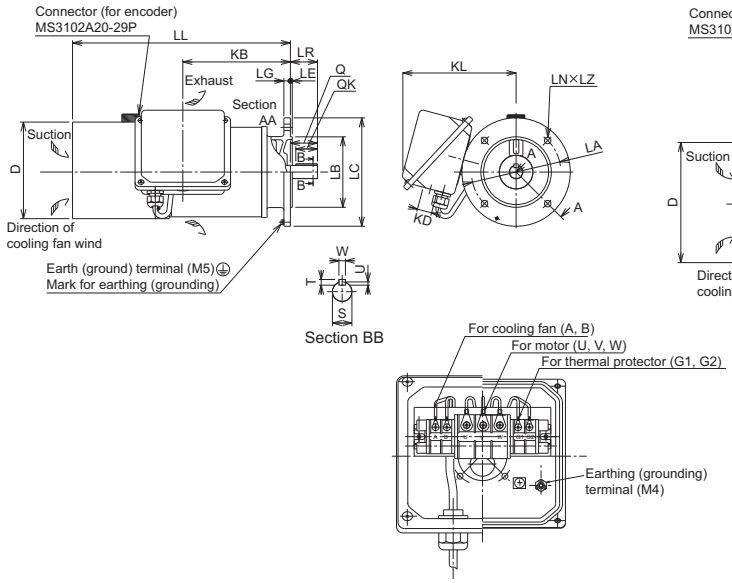

Frame Number 100L, 112M, 132S, 132M
SF-V5RUF(H) 2K, 3K, 5K, 7K

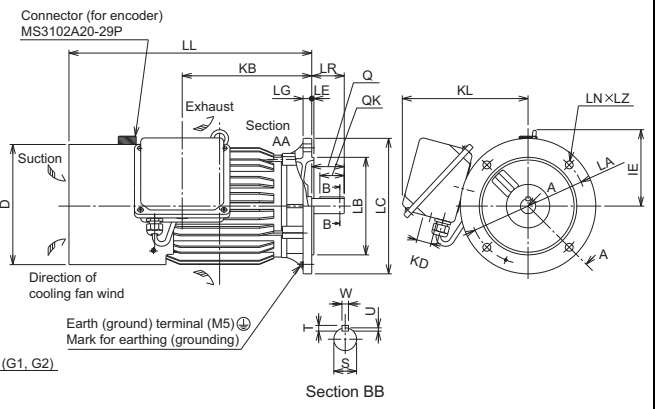

Frame Number 160M, 160L, 180M, 180L
SF-V5RUF(H) 11K, 15K, 18K, 22K

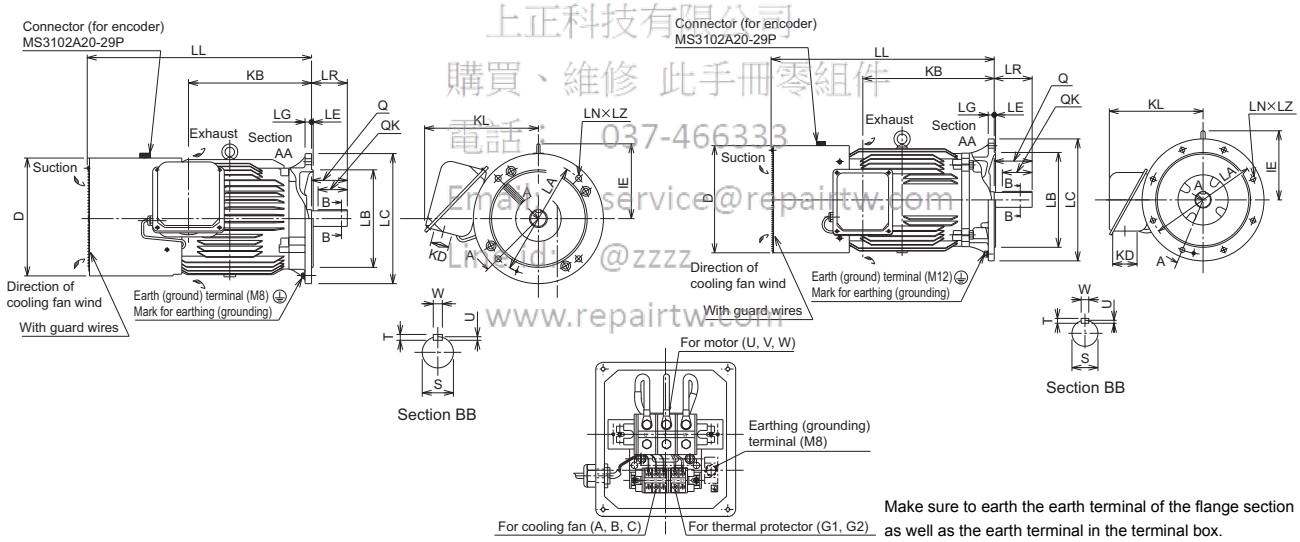

Frame Number 200L
SF-V5RUF(H) 30K, 37K, 45K

上正科技有限公司
購買、維修 此手冊零組件
電話：037-466333
Email: service@repairtw.com
Line id: @zzzz
www.repairtw.com

Dimensions table

(Unit: mm)

SF-V5RU F□K	SF-V5RU F□K1	SF-V5RU F□K3	SF-V5RU F□K4	Flange Number	Frame No.	Mass (kg)	Motor													Shaft End							Terminal Screw Size		
							D	IE	KB	KD	KL	LA	LB	LC	LE	LG	LL	LN	LZ	LR	Q	QK	S	T	U	W	U,V,W	A,B,(C)	G1,G2
1	—	—	—	FF165	90L	26.5	183.6	—	198.5	27	220	165	130j6	200	3.5	12	402	4	12	50	50	40	24j6	7	4	8	M6	M4	M4
2	1	—	—	FF215	100L	37	207	130	213	27	231	215	180j6	250	4	16	432	4	14.5	60	60	45	28j6	7	4	8	M6	M4	M4
3	2	1	—	FF215	112M	46	228	141	239	27	242	215	180j6	250	4	16	448	4	14.5	60	60	45	28j6	7	4	8	M6	M4	M4
5	3	2	—	FF265	132S	65	266	156	256	27	256	265	230j6	300	4	20	484	4	14.5	80	80	63	38k6	8	5	10	M6	M4	M4
7	5	3	1	FF265	132M	70	266	156	294	27	256	265	230j6	300	4	20	522	4	14.5	80	80	63	38k6	8	5	10	M6	M4	M4
11	7	5	2	FF300	160M	110	318	207	318	56	330	300	250j6	350	5	20	625	4	18.5	110	110	90	42k6	8	5	12	M8	M4	M4
15	11	7	3	FF300	160L	125	318	207	362	56	330	300	250j6	350	5	20	669	4	18.5	110	110	90	42k6	8	5	12	M8	M4	M4
18	—	—	—	FF350	180M	160	363	230	378.5	56	352	350	300j6	400	5	20	690	4	18.5	110	110	90	48k6	9	5.5	14	M8	M4	M4
22	15	11	—			185																							
—	18	15	5	FF350	180L	225	363	230	416.5	56	352	350	300j6	400	5	20	728	4	18.5	110	110	90	55m6	10	6	16	M8	M4	M4
30	—	—	7	FF400	200L	270	406	255	485	90	346	400	350j6	450	5	22	823.5	8	18.5	140	140	110	60m6	11	7	18	M10	M4	M4
37, 45	22, 30	18, 22	—			290																							

Note) 1. Install the motor on the floor and use it with the shaft horizontal.
For use under the shaft, the protection structure of the cooling fan is IP20.
2. Leave an enough clearance between the fan suction port and wall to ensure adequate cooling.
Also, check that the ventilation direction of a fan is from the opposite load side to the load side.
3 The size difference of top and bottom of the shaft center height is $^{0}_{-0.5}$
4 The 400V class motor has -H at the end of its type name.

Dedicated motor (SF-V5RU(H)) outline dimension drawings (flange type with brake)

Frame Number 90L
SF-V5RUF(H) 1KB

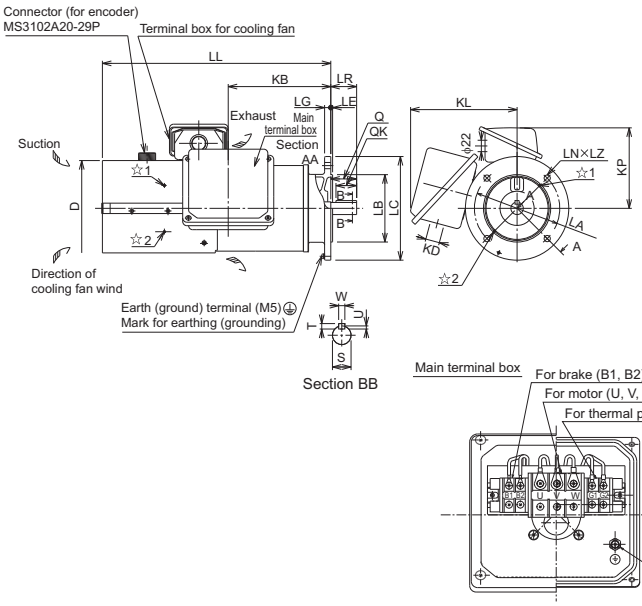

Frame Number 100L, 112M, 132S, 132M
SF-V5RUF(H) 2KB, 3KB, 5KB, 7KB

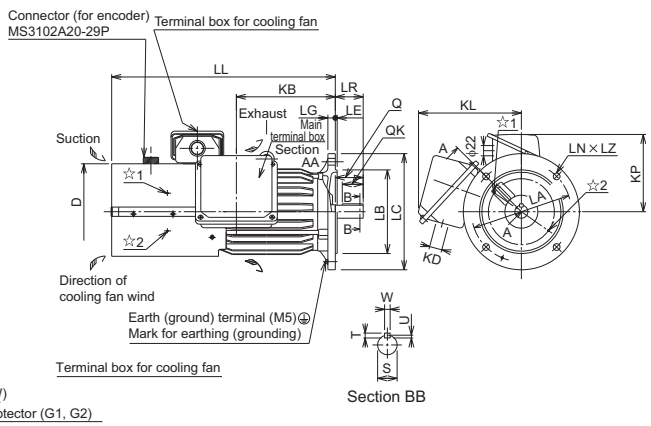

Frame Number 160M, 160L
SF-V5RUF(H) 11KB, 15KB

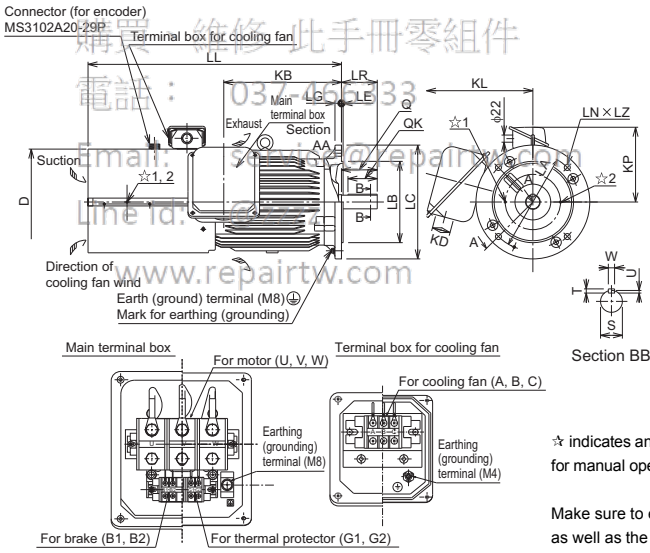

上正科技有限公司
購買 維修 此手冊零組件
電話： 037-651733
Email: service@repairtw.com
Line Id: @
www.repairtw.com

☆ indicates an inserting position of a bolt with hex head holes for manual opening.

Make sure to earth the earth terminal of the flange section as well as the earth terminal in the terminal box.

Dimensions table

(Unit: mm)

SF-V5RU F□KB	SF-V5RU F□K1B	SF-V5RU F□K3B	SF-V5RU F□K4B	Flange Number	Frame No.	Mass (kg)	Motor													Shaft End							Terminal Screw Size			
							D	KB	KD	KL	KP	LA	LB	LC	LE	LG	LL	LN	LZ	LR	Q	QK	S	T	U	W	U,V,W	A,B,(C)	B1,B2	G1,G2
1	—	—	—	FF165	90L	31.5	183.6	198.5	27	220	155	165	130j6	200	3.5	12	442	4	12	50	50	40	24j6	7	4	8	M6	M4	M4	M4
2	1	—	—	FF215	100L	50	207	213	27	231	165	215	180j6	250	4	16	481.5	4	14.5	60	60	45	28j6	7	4	8	M6	M4	M4	M4
3	2	1	—	FF215	112M	58	228	239	27	242	178	215	180j6	250	4	16	525	4	14.5	60	60	45	28j6	7	4	8	M6	M4	M4	M4
5	3	2	—	FF265	132S	83	266	256	27	256	197	265	230j6	300	4	20	597	4	14.5	80	80	63	38k6	8	5	10	M6	M4	M4	M4
7	5	3	1	FF265	132M	88	266	294	27	256	197	265	230j6	300	4	20	635	4	14.5	80	80	63	38k6	8	5	10	M6	M4	M4	M4
11	7	5	2	FF300	160M	151	318	318	56	330	231	300	250j6	350	5	20	735.5	4	18.5	110	110	90	42k6	8	5	12	M8	M4	M4	M4
15	11	7	3	FF300	160L	167	318	362	56	330	231	300	250j6	350	5	20	779.5	4	18.5	110	110	90	42k6	8	5	12	M8	M4	M4	M4

Note) 1. Install the motor on the floor and use it with the shaft horizontal.
2. Leave an enough clearance between the fan suction port and wall to ensure adequate cooling. Also, check that the ventilation direction of a fan is from the opposite load side to the load side.
3 The size difference of top and bottom of the shaft center height is $^{0}_{-0.5}$
4 The 400V class motor has -H at the end of its type name.
5. Since a brake power device is a stand-alone, install it inside the enclosure. (This device should be arranged at the customer side. Refer to the FR-A800 catalog.)

Dedicated motor (SF-THY) outline dimension drawings (1500r/min series)

Frame Number 250MD, 280MD
75kW to 160kW

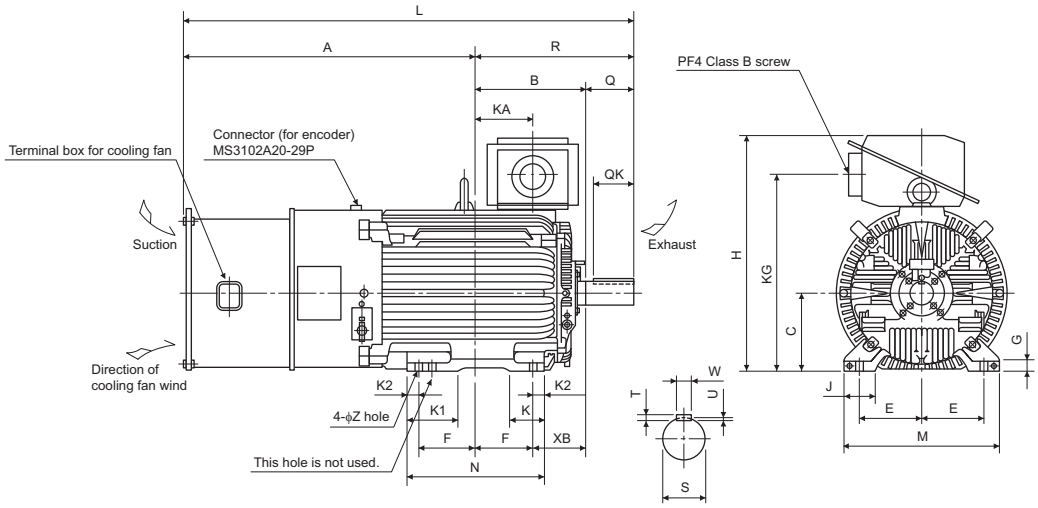

Frame Number 280L, 315H
200kW, 250kW

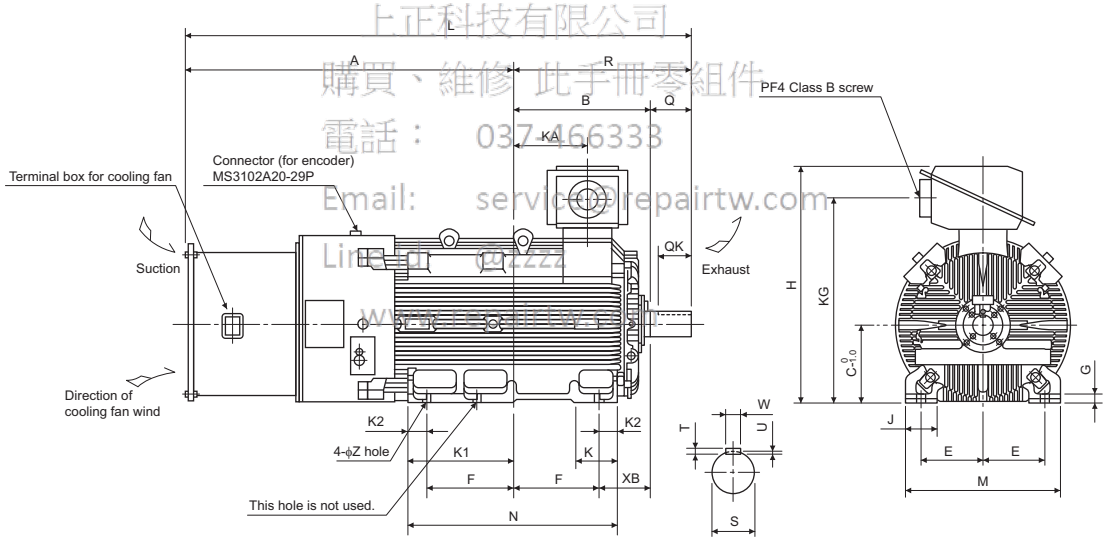

上正科技有限公司
購買、維修 此手冊零組件
電話： 037-466333
Email: service@repairtw.com
Line id: @zzzz
www.repairtw.com

Dimensions table

(Unit: mm)

Output	Frame No.	Mass (kg)	Motor																				Shaft End Size					
			A	B	C	D	E	F	G	H	J	K	K1	K2	L	M	N	R	Z	XB	KA	KG	Q	QK	S	W	T	U
75	250MD	610	988.5	340.5	250	557	203	174.5	30	775	100	130	168	50	1471	486	449	482.5	24	168	157.5	635	140	110	ϕ75m6	20	12	7.5
90	250MD	660	988.5	340.5	250	557	203	174.5	30	775	100	130	168	50	1471	486	449	482.5	24	168	157.5	635	140	110	ϕ75m6	20	12	7.5
110	280MD	870	1049.5	397.5	280	607	228.5	209.5	30	845	110	130	181	40	1619	560	449	569.5	24	190	210.5	705	170	140	ϕ85m6	22	14	9
132	280MD	890	1049.5	397.5	280	607	228.5	209.5	30	845	110	130	181	40	1619	560	449	569.5	24	190	210.5	705	170	140	ϕ85m6	22	14	9
160	280MD	920	1049.5	397.5	280	607	228.5	209.5	30	845	110	130	181	40	1619	560	499	569.5	24	190	210.5	705	170	140	ϕ85m6	22	14	9
200	280L	1170	1210.5	416.5	280	652	228.5	228.5	30	885	110	160	160	75	1799	560	607	588.5	24	190	214.5	745	170	140	ϕ85m6	22	14	9
250	315H	1630	1343	565	315	717	254	355	35	965	130	175	428	80	2084	636	870	741	28	216	306	825	170	140	ϕ95m6	25	14	9

Note) The tolerance of the top and bottom of the center shaft height *C is $^{0}_{-0.5}$ for the 250 frame and $^{0}_{-1.0}$ for the 280 frame or more.

APPENDIX

APPENDIX provides the reference information for use of this product. Refer to APPENDIX as required.

Appendix1 For customers replacing the conventional model with this inverter 688

Appendix2 Specification comparison between PM sensorless vector control and induction motor control.....690

Appendix3 Parameters (function codes) and instruction codes under different control methods 691

上証科技有限公司
購買、維修 此手冊零組件
電話： 037 466333
Email: service@repairtw.com
Line id: @zzzz
www.repairtw.com

Appendix1 For customers replacing the conventional model with this inverter

Appendix 1.1 Replacement of the FR-A700 series

(1) Differences and compatibility with the FR-A700 series

Item		FR-A700	FR-A800
Control method		V/F control Advanced magnetic flux vector control Real sensorless vector control Vector control (with plug-in option) PM sensorless vector control (IPM motor)	V/F control Advanced magnetic flux vector control Real sensorless vector control Vector control (with plug-in option) PM sensorless vector control (IPM motor/SPM motor)
Added functions		—	USB host function Safety stop function etc.
Brake transistor (brake resistor usable)		Built in for the FR-A720-0.4K to 22K Built in for the FR-A740-0.4K to 22K	Built in for the FR-A820-00046(0.4K) to 01250(22K) Built in for the FR-A840-00023(0.4K) to 03160(55K)
Maximum output frequency	V/F control	400 Hz	590 Hz
	Advanced magnetic flux vector control	120 Hz	400 Hz
	Real sensorless vector control	120 Hz	400 Hz
	vector control	120 Hz	400 Hz
	PM sensorless vector control (MM-CF)	200 Hz	200 Hz
PID control		Turn the X14 signal ON to enable PID control.	The X14 signal does not need to be assigned. (PID control is available by the **Pr.128** setting.) The PID pre-charge function and dancer control are added.
Automatic restart after instantaneous power failure		Turn the CS signal ON to restart.	CS signal assignment not required. (Restart is enabled with the **Pr.57** setting only.)
Number of motor poles V/F control switching		The V/F switching signal (X18) is valid when **Pr.81** = "12 to 20 (2 to 10 poles)".	**Pr.81** = "12 (12 poles)" X18 is valid regardless of the Pr.81 setting. (The **Pr.81** settings "14 to 20" are not available.)
PTC thermistor input		Input from the terminal AU (The function of the terminal AU is switched by a switch.)	Input from the terminal 2. (The function of the terminal 2 is switched by the **Pr.561** setting.)
USB connector		B connector	Mini B connector
Control circuit terminal block		Removable terminal block (screw type)	Removable terminal block (spring clamp type)
Terminal response level		The FR-A800's I/O terminals have better response level than the FR-A700's terminals. By setting **Pr.289 Inverter output terminal filter** and **Pr.699 Input terminal filter**, the terminal response level can be compatible with that of FR-A700. Set to approximately 5 to 8 ms and adjust the setting according to the system.	
PU		FR-DU07 (4-digit LED) FR-PU07	FR-DU08 (5-digit LED) FR-PU07 (Some functions, such as parameter copy, are unavailable.) FR-DU07 is not supported.
Plug-in option		Dedicated plug-in options (not interchangeable)	
Communication option		Connected to the connector 3	Connected to the connector 1
Installation size		Installation size is compatible for all capacities. (Replacement between the same capacities does not require new mounting holes.)	

上正科技有限公司
購買、維修 此手冊零組件
電話： 037-466333
Email: service@repairtw.com
Line id: @zzzz
www.repairtw.com

(2) Installation precautions

•Removal procedure of the front cover is different. (Refer to page 22.)
•Plug-in options of the FR-A700 series are not compatible.
•Operation panel (FR-DU07) cannot be used.

(3) Wiring precautions

•The spring clamp type terminal block has changed to the screw type. Use of blade terminals is recommended.

(4) Instructions for continuous use of the FR-PU07 (parameter unit)

•For the FR-A800 series, many functions (parameters) have been added. When setting these parameters, the parameter names and setting ranges are not displayed.
•Only the parameter with the numbers up to "999" can be read and set. The parameters with the numbers after "999" cannot be read or set.
•Many protective functions have been added for the FR-A800 series. These functions are available, but all faults are displayed as "Fault".When the faults history is checked, "ERR" appears. Added faults will not appear on the parameter unit. (However, MT1 to MT3 are displayed as MT.)
•Parameter copy/verification function are not available.

(5) Copying parameter settings

- The FR-A700 series' parameter settings can be easily copied to the FR-A800 series by using the setup software (FR Configurator2). (Not supported by the setup software FR-SW3-SETUP or older.)

Appendix 1.2 Replacement of the FR-A500(L) series

(1) Installation precautions

- To use the same mounting holes of the FR-A540-11K or 15K for the A800 series, the optional installation interchange attachment (FR-AAT) is necessary.
- The heatsink protrusion attachment is not interchangeable.
  The enclosure cut dimensions of the FR-A520-3.7K or lower, FR-A520-30K, FR-A520-55K or higher, FR-A540-3.7K or lower, FR-A540-11K and 15K, and FR-A540-75K or higher are not compatible.

大百科技有限公司
購買、維修 此手冊零組件
電話： 037-466333
Email: service@repairtw.com
Line id: @zzzz
www.repairtw.com

Appendix2 Specification comparison between PM sensorless vector control and induction motor control

Item	PM sensorless vector control (MM-CF)		Induction motor control
Applicable motor	IPM motor MM-CF series (0.5 to 7.0 kW) (Refer to page 674.) IPM motors other than MM-CF (tuning required)*1		Induction motor*1
Starting torque	High frequency superposition control	200%(200% for the 1.5 kW or lower with MM-CF, 150% for the 2.0 kW or higher)	200% (FR-A820-00250(3.7K) or lower and FR-A840-00126(3.7K) or lower) 150% (5.5K or higher) under Real sensorless vector control and vector control
	Current synchronization operation	50%	
Zero speed	High frequency superposition control	Available (Use a one-rank higher inverter for zero-speed 200%.)	Available under Real sensorless vector control and vector control
	Current synchronization operation	Not available	
Carrier frequency	High frequency superposition control	6 kHz(**Pr.72** = "0 to 9"), 10 kHz(**Pr.72** = "10 to 13"), 14 kHz(**Pr.72** = "14 or 15") (6 kHz in a low-speed range of 10 kHz or higher. 2 kHz is not selectable.)	Any value in the range of 0.75 kHz to 14.5 kHz (FR-A820-03160(55K) or lower and FR-A840-01800(55K) or lower) 0.75 kHz to 6 kHz (FR-A820-03800(75K) or higher and FR-A840-02160(75K) or higher)
	Current synchronization operation	2 kHz(**Pr.72** = "0 to 5"), 6 kHz(**Pr.72** = "6 to 9"), 10 kHz(**Pr.72** = "10 to 13"), 14 kHz(**Pr.72** = "14 or 15") (6 kHz in a low-speed range of 10 kHz or higher.)	
Automatic restart after instantaneous power failure	No startup waiting time. Using the regeneration avoidance function or retry function together is recommended.		Startup waiting time exists.
Startup delay	Startup delay of about 0.1 s for magnetic pole position detection.		No startup delay(when online auto tuning is not performed at startup).
Driving by the commercial power supply	Cannot be driven by the commercial power supply.		Can be driven by the commercial power supply.(Other than vector control dedicated motor.)
Operation during coasting	While the motor is coasting, potential is generated across motor terminals.		While the motor is coasting, potential is not generated across motor terminals.
Torque control	Not available		Available under Real sensorless vector control and vector control.
Position control	High frequency superposition control	Available (sensorless)	Available under vector control.
	Current synchronization operation	Not available	

上正科技有限公司
購買、維修 此手冊零組件
電話： 037-466333
Email: service@repairtw.com
Line id: @zzzz
www.repairtw.com

*1 For the motor capacity, the rated motor current should be equal to or less than the rated inverter current. (It must be 0.4 kW or higher.)
If a motor with substantially low rated current compared with the rated inverter current is used, speed and torque accuracies may deteriorate due to torque ripples, etc. Set the rated motor current to about 40% or higher of the rated inverter current.

REMARKS

- Before wiring, make sure that the motor is stopped. Otherwise you may get an electric shock.
- Never connect an IPM motor to the commercial power supply.
- No slippage occurs with an IPM motor because of its characteristic. If an IPM motor, which took over an induction motor, is driven at the same speed as for the general-purpose motor, the running speed of the IPM motor becomes faster by the amount of the general-purpose motor's slippage. Adjust the speed command to run the IPM motor at the same speed as the induction motor, as required.

Appendix3 Parameters (function codes) and instruction codes under different control methods

*1 Instruction codes are used to read and write parameters in accordance with the Mitsubishi inverter protocol of RS-485 communication. (For RS-485 communication, refer to page 544.)

*2 Function availability under each control method is shown as below:
O: Available
×: Not available
Δ: Available only during position control set by parameter

*3 For "parameter copy", "parameter clear", and "all parameter clear", "O" indicates the function is available, and "×" indicates the function is not available.

*4 These parameters are not cleared by the parameter clear (all parameter clear) command, which are sent through RS-485 communication.(For RS-485 communication, refer to page 544.)

*5 When a communication option is installed, parameter clear (lock release) during password lock (**Pr.297** ≠ "9999") can be performed only from the communication option.

*6 Available when the IPM motor MM-CF series is used and the low-speed range high-torque characteristic is enabled (**Pr.788** = "9999 (initial value)").

*7 Reading and writing via the PU connector are available.

Symbols in the table indicate parameters that operate when the options are connected.

AP FR-A8AP, AR FR-A8AR, AX FR-A8AX, AY FR-A8AY, NC FR-A8NC, NCE FR-A8NCE, ND FR-A8ND, NP FR-A8NP

Pr.	Name	Instruction code*1			Control method*2									Parameter		
		Read	Write	Extended	V/F	Magnetic flux	Vector: Speed control	Vector: Torque control	Vector: Position control	Sensorless: Speed control	Sensorless: Torque control	PM: Speed control	PM: Position control	Copy*3	Clear*3	All clear*3
0	Torque boost	00	80	0	O	×	×	×	×	×	×	×	×	O	O	O
1	Maximum frequency	01	81	0	O	O	O	O	O	O	O	O	O	O	O	O
2	Minimum frequency	02	82	0	O	O	O	O	×	O	O	O	×	O	O	O
3	Base frequency	03	83	0	O	×	×	×	×	×	×	×	×	O	O	O
4	Multi-speed setting (high speed)	04	84	0	O	O	O	O	Δ	O	O	O	Δ	O	O	O
5	Multi-speed setting (middle speed)	05	85	0	O	O	O	O	Δ	O	O	O	Δ	O	O	O
6	Multi-speed setting (low speed)	06	86	0	O	O	O	O	Δ	O	O	O	Δ	O	O	O
7	Acceleration time	07	87	0	O	O	O	O	Δ	O	O	O	Δ	O	O	O
8	Deceleration time	08	88	0	O	O	O	O	Δ	O	O	O	Δ	O	O	O
9	Electronic thermal O/L relay	09	89	0	O	O	O	O	O	O	O	O	O	O	O	O
10	DC injection brake operation frequency	0A	8A	0	O	O	O	O	×	O	O	O	×	O	O	O
11	DC injection brake operation time	0B	8B	0	O	O	O	O	×	O	O	O	×	O	O	O
12	DC injection brake operation voltage	0C	8C	0	O	O	×	×	×	×	×	×	×	O	O	O
13	Starting frequency	0D	8D	0	O	O	O	O	×	O	O	O	×	O	O	O
14	Load pattern selection	0E	8E	0	O	×	×	×	×	×	×	×	×	O	O	O
15	Jog frequency	0F	8F	0	O	O	O	O	×	O	O	O	×	O	O	O
16	Jog acceleration/deceleration time	10	90	0	O	O	O	O	×	O	O	O	×	O	O	O
17	MRS input selection	11	91	0	O	O	O	O	O	O	O	O	O	O	O	O
18	High speed maximum frequency	12	92	0	O	O	×	×	×	×	×	O	×	O	O	O
19	Base frequency voltage	13	93	0	O	×	×	×	×	×	×	×	×	O	O	O
20	Acceleration/deceleration reference frequency	14	94	0	O	O	O	O	Δ	O	O	O	Δ	O	O	O
21	Acceleration/deceleration time increments	15	95	0	O	O	O	O	Δ	O	O	O	Δ	O	O	O
22	Stall prevention operation level (Torque limit level)	16	96	0	O	O	O	×	O	O	×	O	O	O	O	O
23	Stall prevention operation level compensation factor at double speed	17	97	0	O	O	×	×	×	×	×	×	×	O	O	O
24	Multi-speed setting (speed 4)	18	98	0	O	O	O	O	Δ	O	O	O	Δ	O	O	O
25	Multi-speed setting (speed 5)	19	99	0	O	O	O	O	Δ	O	O	O	Δ	O	O	O
26	Multi-speed setting (speed 6)	1A	9A	0	O	O	O	O	Δ	O	O	O	Δ	O	O	O
27	Multi-speed setting (speed 7)	1B	9B	0	O	O	O	O	Δ	O	O	O	Δ	O	O	O
28	Multi-speed input compensation selection	1C	9C	0	O	O	O	O	×	O	O	O	×	O	O	O
29	Acceleration/deceleration pattern selection	1D	9D	0	O	O	O	O	×	O	O	O	×	O	O	O
30	Regenerative function selection	1E	9E	0	O	O	O	O	O	O	O	O	O	O	O	O
31	Frequency jump 1A	1F	9F	0	O	O	O	O	×	O	O	O	×	O	O	O
32	Frequency jump 1B	20	A0	0	O	O	O	O	×	O	O	O	×	O	O	O
33	Frequency jump 2A	21	A1	0	O	O	O	O	×	O	O	O	×	O	O	O
34	Frequency jump 2B	22	A2	0	O	O	O	O	×	O	O	O	×	O	O	O
35	Frequency jump 3A	23	A3	0	O	O	O	O	×	O	O	O	×	O	O	O

上正科技有限公司
購買、維修此手冊零組件
電話：886-46338
Email: service@repairtw.com
Line id: @zzz
www.repairtw.com

Pr.	Name	Instruction code*1			Control method*2									Parameter		
		Read	Write	Extended	V/F	Magnetic flux	Vector: Speed control	Vector: Torque control	Vector: Position control	Sensorless: Speed control	Sensorless: Torque control	PM: Speed control	PM: Position control	Copy*3	Clear*3	All clear*3
36	Frequency jump 3B	24	A4	0	O	O	O	O	×	O	O	O	×	O	O	O
37	Speed display	25	A5	0	O	O	O	O	O	O	O	O	O	O	O	O
41	Up-to-frequency sensitivity	29	A9	0	O	O	O	×	×	O	×	O	×	O	O	O
42	Output frequency detection	2A	AA	0	O	O	O	O	O	O	O	O	O	O	O	O
43	Output frequency detection for reverse rotation	2B	AB	0	O	O	O	O	O	O	O	O	O	O	O	O
44	Second acceleration/deceleration time	2C	AC	0	O	O	O	O	Δ	O	O	O	Δ	O	O	O
45	Second deceleration time	2D	AD	0	O	O	O	O	Δ	O	O	O	Δ	O	O	O
46	Second torque boost	2E	AE	0	O	×	×	×	×	×	×	×	×	O	O	O
47	Second V/F (base frequency)	2F	AF	0	O	×	×	×	×	×	×	×	×	O	O	O
48	Second stall prevention operation level	30	B0	0	O	O	×	×	×	×	×	×	×	O	O	O
49	Second stall prevention operation frequency	31	B1	0	O	O	×	×	×	×	×	×	×	O	O	O
50	Second output frequency detection	32	B2	0	O	O	O	O	O	O	O	O	O	O	O	O
51	Second electronic thermal O/L relay	33	B3	0	O	O	O	O	O	O	O	O	O	O	O	O
52	Operation panel main monitor selection	34	B4	0	O	O	O	O	O	O	O	O	O	O	O	O
54	FM/CA terminal function selection	36	B6	0	O	O	O	O	O	O	O	O	O	O	O	O
55	Frequency monitoring reference	37	B7	0	O	O	O	O	O	O	O	O	O	O	O	O
56	Current monitoring reference	38	B8	0	O	O	O	O	O	O	O	O	O	O	O	O
57	Restart coasting time	39	B9	0	O	O	O	O	×	O	O	O	×	O	O	O
58	Restart cushion time	3A	BA	0	O	O	×	×	×	×	×	×	×	O	O	O
59	Remote function selection	3B	BB	0	O	O	O	O	×	O	O	O	×	O	O	O
60	Energy saving control selection	3C	BC	0	O	O	×	×	×	×	×	×	×	O	O	O
61	Reference current	3D	BD	0	O	O	O	×	×	O	×	×	×	O	O	O
62	Reference value at acceleration	3E	BE	0	O	O	O	×	×	O	×	×	×	O	O	O
63	Reference value at deceleration	3F	BF	0	O	O	O	×	×	O	×	×	×	O	O	O
64	Starting frequency for elevator mode	40	C0	0	O	×	×	×	×	×	×	×	×	O	O	O
65	Retry selection	41	C1	0	O	O	O	O	×	O	O	O	×	O	O	O
66	Stall prevention operation reduction starting frequency	42	C2	0	O	O	×	×	×	×	×	×	×	O	O	O
67	Number of retries at fault occurrence	43	C3	0	O	O	O	O	×	O	O	O	×	O	O	O
68	Retry waiting time	44	C4	0	O	O	O	O	×	O	O	O	×	O	O	O
69	Retry count display erase	45	C5	0	O	O	O	O	×	O	O	O	×	O	O	O
70	Special regenerative brake duty	46	C6	0	O	O	O	O	O	O	O	O	O	O	O	O
71	Applied motor	47	C7	0	O	O	O	O	O	O	O	O	O	O	O	O
72	PWM frequency selection	48	C8	0	O	O	O	O	O	O	O	O	O	O	O	O
73	Analog input selection	49	C9	0	O	O	O	O	×	O	O	O	×	O	O	O
74	Input filter time constant	4A	CA	0	O	O	O	O	×	O	O	O	×	O	O	O
75	Reset selection/disconnected PU detection/PU stop selection	4B	CB	0	O	O	O	O	O	O	O	O	O	O	×	×
76	Fault code output selection	4C	CC	0	O	O	O	O	O	O	O	O	O	O	O	O
77*7	Parameter write selection	4D	CD	0	O	O	O	O	O	O	O	O	O	O	O	O
78	Reverse rotation prevention selection	4E	CE	0	O	O	O	O	O	O	O	O	O	O	O	O
79*7	Operation mode selection	4F	CF	0	O	O	O	O	O	O	O	O	O	O	O	O
80	Motor capacity	50	D0	0	×	O	O	O	O	O	O	O	O	O	O	O
81	Number of motor poles	51	D1	0	×	O	O	O	O	O	O	×	O	O	×	O
82	Motor excitation current	52	D2	0	×	O	O	O	O	O	O	O	O	O	O	O
83	Rated motor voltage	53	D3	0	×	O	O	O	O	O	O	O	O	O	O	O
84	Rated motor frequency	54	D4	0	×	O	×	×	×	×	×	×	×	O	×	O
89	Speed control gain (Advanced magnetic flux vector)	59	D9	0	×	O	O	O	O	O	O	O	O	O	×	O
90	Motor constant (R1)	5A	DA	0	×	O	O	O	O	O	O	×	O	O	×	O
91	Motor constant (R2)	5B	DB	0	×	O	O	O	O	O	O	O	O	O	×	O
92	Motor constant (L1)/d-shaft inductance (Ld)	5C	DC	0	×	O	O	O	O	O	O	O	O	O	×	O
93	Motor constant (L2)/q-shaft inductance (Lq)	5D	DD	0	×	O	O	O	O	O	O	×	O	O	×	O
94	Motor constant (X)	5E	DE	0	×	O	O	O	O	O	O	×	O	O	O	O
95	Online auto tuning selection	5F	DF	0	×	O	O	O	O	O	O	O	O	O	×	O
96	Auto tuning setting/status	60	E0	0	O	×	×	×	×	×	×	×	×	O	O	O
100	V/F1(first frequency)	00	80	1	×	O	O	O	O	O	O	O	O	O	O	O
101	V/F1(first frequency voltage)	01	81	1	O	×	×	×	×	×	×	×	×	O	O	O

上元牧有限公司
購買維修 免手冊產線
電話：037-466333
Email: service@repairtw.com
Line id: @zzz
www.repairtw.com

Pr.	Name	Instruction code*1			Control method*2									Parameter		
		Read	Write	Extended	V/F	Magnetic flux	Vector			Sensorless		PM		Copy*3	Clear*3	All clear*3
							Speed control	Torque control	Position control	Speed control	Torque control	Speed control	Position control			
102	V/F2(second frequency)	02	82	1	O	×	×	×	×	×	×	×	×	O	O	O
103	V/F2(second frequency voltage)	03	83	1	O	×	×	×	×	×	×	×	×	O	O	O
104	V/F3(third frequency)	04	84	1	O	×	×	×	×	×	×	×	×	O	O	O
105	V/F3(third frequency voltage)	05	85	1	O	×	×	×	×	×	×	×	×	O	O	O
106	V/F4(fourth frequency)	06	86	1	O	×	×	×	×	×	×	×	×	O	O	O
107	V/F4(fourth frequency voltage)	07	87	1	O	×	×	×	×	×	×	×	×	O	O	O
108	V/F5(fifth frequency)	08	88	1	O	×	×	×	×	×	×	×	×	O	O	O
109	V/F5(fifth frequency voltage)	09	89	1	O	×	×	×	×	×	×	×	×	O	O	O
110	Third acceleration/deceleration time	0A	8A	1	O	O	O	O	Δ	O	O	O	Δ	O	O	O
111	Third deceleration time	0B	8B	1	O	O	O	O	Δ	O	O	O	Δ	O	O	O
112	Third torque boost	0C	8C	1	O	×	×	×	×	×	×	×	×	O	O	O
113	Third V/F (base frequency)	0D	8D	1	O	×	×	×	×	×	×	×	×	O	O	O
114	Third stall prevention operation level	0E	8E	1	O	O	×	×	×	×	×	×	×	O	O	O
115	Third stall prevention operation frequency	0F	8F	1	O	O	×	×	×	×	×	×	×	O	O	O
116	Third output frequency detection	10	90	1	O	O	O	O	O	O	O	O	O	O	O	O
117	PU communication station number	11	91	1	O	O	O	O	O	O	O	O	O	O	O*4	O*4
118	PU communication speed	12	92	1	O	O	O	O	O	O	O	O	O	O	O*4	O*4
119	PU communication stop bit length	13	93	1	O	O	O	O	O	O	O	O	O	O	O*4	O*4
120	PU communication parity check	14	94	1	O	O	O	O	O	O	O	O	O	O	O*4	O*4
121	Number of PU communication retries	15	95	1	O	O	O	O	O	O	O	O	O	O	O*4	O*4
122	PU communication check time interval	16	96	1	O	O	O	O	O	O	O	O	O	O	O*4	O*4
123	PU communication waiting time setting	17	97	1	O	O	O	O	O	O	O	O	O	O	O*4	O*4
124	PU communication CR/LF selection	18	98	1	O	O	O	O	O	O	O	O	O	O	O*4	O*4
125	Terminal 2 frequency setting gain frequency	19	99	1	O	O	O	O	×	O	O	O	×	O	×	O
126	Terminal 4 frequency setting gain frequency	1A	9A	1	O	O	O	O	×	O	O	O	×	O	×	O
127	PID control automatic switchover frequency	1B	9B	1	O	O	O	×	×	O	×	O	×	O	O	O
128	PID action selection	1C	9C	1	O	O	O	×	×	O	×	O	×	O	O	O
129	PID proportional band	1D	9D	1	O	O	O	×	×	O	×	O	×	O	O	O
130	PID integral time	1E	9E	1	O	O	O	×	×	O	×	O	×	O	O	O
131	PID upper limit	1F	9F	1	O	O	O	×	×	O	×	O	×	O	O	O
132	PID lower limit	20	A0	1	O	O	O	×	×	O	×	O	×	O	O	O
133	PID action set point	21	A1	1	O	O	O	×	×	O	×	O	×	O	O	O
134	PID differential time	22	A2	1	O	O	O	×	×	O	×	O	×	O	O	O
135	Electronic bypass sequence selection	23	A3	1	O	O	O	×	×	O	×	×	×	O	O	O
136	MC switchover interlock time	24	A4	1	O	O	O	×	×	O	×	×	×	O	O	O
137	Start waiting time	25	A5	1	O	O	O	×	×	O	×	×	×	O	O	O
138	Bypass selection at a fault	26	A6	1	O	O	O	×	×	O	×	×	×	O	O	O
139	Automatic switchover frequency from inverter to bypass operation	27	A7	1	O	O	O	×	×	O	×	×	×	O	O	O
140	Backlash acceleration stopping frequency	28	A8	1	O	O	O	O	×	O	O	O	×	O	O	O
141	Backlash acceleration stopping time	29	A9	1	O	O	O	O	×	O	O	O	×	O	O	O
142	Backlash deceleration stopping frequency	2A	AA	1	O	O	O	O	×	O	O	O	×	O	O	O
143	Backlash deceleration stopping time	2B	AB	1	O	O	O	O	×	O	O	O	×	O	O	O
144	Speed setting switchover	2C	AC	1	O	O	O	O	O	O	O	O	O	O	O	O
145	PU display language selection	2D	AD	1	O	O	O	O	O	O	O	O	O	O	×	×
147	Acceleration/deceleration time switching frequency	2F	AF	1	O	O	O	O	Δ	O	O	O	Δ	O	O	O
148	Stall prevention level at 0 V input	30	B0	1	O	O	×	×	×	×	×	×	×	O	O	O
149	Stall prevention level at 10 V input	31	B1	1	O	O	×	×	×	×	×	×	×	O	O	O
150	Output current detection level	32	B2	1	O	O	O	O	O	O	O	O	O	O	O	O
151	Output current detection signal delay time	33	B3	1	O	O	O	O	O	O	O	O	O	O	O	O
152	Zero current detection level	34	B4	1	O	O	O	O	O	O	O	O	O	O	O	O
153	Zero current detection time	35	B5	1	O	O	O	O	O	O	O	O	O	O	O	O
154	Voltage reduction selection during stall prevention operation	36	B6	1	O	O	×	×	×	×	×	×	×	O	O	O
155	RT signal function validity condition selection	37	B7	1	O	O	O	×	×	O	×	O	×	O	O	O
156	Stall prevention operation selection	38	B8	1	O	O	O	×	×	O	×	O	×	O	O	O
157	OL signal output timer	39	B9	1	O	O	O	O	O	O	O	O	O	O	O	O

上正機電有限公司
購買、維修此手冊零組件
電話：037-466333
Email: service@repairtw.com
Line id: @rtz1
www.repairtw.com

Pr.	Name	Instruction code*1			Control method*2									Parameter		
		Read	Write	Extended	V/F	Magnetic flux	Vector: Speed control	Vector: Torque control	Vector: Position control	Sensorless: Speed control	Sensorless: Torque control	PM: Speed control	PM: Position control	Copy*3	Clear*3	All clear*3
158	AM terminal function selection	3A	BA	1	O	O	O	O	O	O	O	O	O	O	O	O
159	Automatic switchover frequency range from bypass to inverter operation	3B	BB	1	O	O	O	×	×	O	×	×	×	O	O	O
160	User group read selection	00	80	2	O	O	O	O	O	O	O	O	O	O	O	O
161	Frequency setting/key lock operation selection	01	81	2	O	O	O	O	O	O	O	O	O	O	×	O
162	Automatic restart after instantaneous power failure selection	02	82	2	O	O	O	O	×	O	O	O	×	O	O	O
163	First cushion time for restart	03	83	2	O	O	×	×	×	×	×	×	×	O	O	O
164	First cushion voltage for restart	04	84	2	O	O	×	×	×	×	×	×	×	O	O	O
165	Stall prevention operation level for restart	05	85	2	O	O	×	×	×	×	×	×	×	O	O	O
166	Output current detection signal retention time	06	86	2	O	O	O	O	O	O	O	O	O	O	O	O
167	Output current detection operation selection	07	87	2	O	O	O	O	O	O	O	O	O	O	O	O
168 169	Parameter for manufacturer setting. Do not set.															
170	Watt-hour meter clear	0A	8A	2	O	O	O	O	O	O	O	O	O	O	×	O
171	Operation hour meter clear	0B	8B	2	O	O	O	O	O	O	O	O	O	×	×	×
172	User group registered display/batch clear	0C	8C	2	O	O	O	O	O	O	O	O	O	×	×	×
173	User group registration	0D	8D	2	O	O	O	O	O	O	O	O	O	×	×	×
174	User group clear	0E	8E	2	O	O	O	O	O	O	O	O	O	×	×	×
178	STF terminal function selection	12	92	2	O	O	O	O	O	O	O	O	O	O	×	O
179	STR terminal function selection	13	93	2	O	O	O	O	O	O	O	O	O	O	×	O
180	RL terminal function selection	14	94	2	O	O	O	O	O	O	O	O	O	O	×	O
181	RM terminal function selection	15	95	2	O	O	O	O	O	O	O	O	O	O	×	O
182	RH terminal function selection	16	96	2	O	O	O	O	O	O	O	O	O	O	×	O
183	RT terminal function selection	17	97	2	O	O	O	O	O	O	O	O	O	O	×	O
184	AU terminal function selection	18	98	2	O	O	O	O	O	O	O	O	O	O	×	O
185	JOG terminal function selection	19	99	2	O	O	O	O	O	O	O	O	O	O	×	O
186	CS terminal function selection	1A	9A	2	O	O	O	O	O	O	O	O	O	O	×	O
187	MRS terminal function selection	1B	9B	2	O	O	O	O	O	O	O	O	O	O	×	O
188	STOP terminal function selection	1C	9C	2	O	O	O	O	O	O	O	O	O	O	×	O
189	RES terminal function selection	1D	9D	2	O	O	O	O	O	O	O	O	O	O	×	O
190	RUN terminal function selection	1E	9E	2	O	O	O	O	O	O	O	O	O	O	×	O
191	SU terminal function selection	1F	9F	2	O	O	O	O	O	O	O	O	O	O	×	O
192	IPF terminal function selection	20	A0	2	O	O	O	O	O	O	O	O	O	O	×	O
193	OL terminal function selection	21	A1	2	O	O	O	O	O	O	O	O	O	O	×	O
194	FU terminal function selection	22	A2	2	O	O	O	O	O	O	O	O	O	O	×	O
195	ABC1 terminal function selection	23	A3	2	O	O	O	O	O	O	O	O	O	O	×	O
196	ABC2 terminal function selection	24	A4	2	O	O	O	O	O	O	O	O	O	O	×	O
232	Multi-speed setting (speed 8)	28	A8	2	O	O	O	O	Δ	O	O	O	Δ	O	O	O
233	Multi-speed setting (speed 9)	29	A9	2	O	O	O	O	Δ	O	O	O	Δ	O	O	O
234	Multi-speed setting (speed 10)	2A	AA	2	O	O	O	O	Δ	O	O	O	Δ	O	O	O
235	Multi-speed setting (speed 11)	2B	AB	2	O	O	O	O	Δ	O	O	O	Δ	O	O	O
236	Multi-speed setting (speed 12)	2C	AC	2	O	O	O	O	Δ	O	O	O	Δ	O	O	O
237	Multi-speed setting (speed 13)	2D	AD	2	O	O	O	O	Δ	O	O	O	Δ	O	O	O
238	Multi-speed setting (speed 14)	2E	AE	2	O	O	O	O	Δ	O	O	O	Δ	O	O	O
239	Multi-speed setting (speed 15)	2F	AF	2	O	O	O	O	Δ	O	O	O	Δ	O	O	O
240	Soft-PWM operation selection	30	B0	2	O	O	O	O	O	O	O	O	O	O	O	O
241	Analog input display unit switchover	31	B1	2	O	O	O	O	O	O	O	O	O	O	O	O
242	Terminal 1 added compensation amount (terminal 2)	32	B2	2	O	O	O	O	×	O	O	O	×	O	O	O
243	Terminal 1 added compensation amount (terminal 4)	33	B3	2	O	O	O	O	×	O	O	O	×	O	O	O
244	Cooling fan operation selection	34	B4	2	O	O	O	O	O	O	O	O	O	O	O	O
245	Rated slip	35	B5	2	O	×	×	×	×	×	×	×	×	O	O	O
246	Slip compensation time constant	36	B6	2	O	×	×	×	×	×	×	×	×	O	O	O
247	Constant-power range slip compensation selection	37	B7	2	O	×	×	×	×	×	×	×	×	O	O	O
248	Self power management selection	38	B8	2	O	O	×	×	×	×	×	O	×	O	O	O
249	Earth (ground) fault detection at start	39	B9	2	O	O	×	×	×	×	×	×	×	O	O	O

日昌科技有限公司
購買維修 此手冊委託作
電話 037-466833
Email: service@repairfw.com
Line ID @zzz
www.repairfw.com

Pr.	Name	Instruction code*1			Control method*2									Parameter		
		Read	Write	Extended	V/F	Magnetic flux	Vector: Speed control	Vector: Torque control	Vector: Position control	Sensorless: Speed control	Sensorless: Torque control	PM: Speed control	PM: Position control	Copy*3	Clear*3	All clear*3
250	Stop selection	3A	BA	2	O	O	O	O	×	O	O	O	×	O	O	O
251	Output phase loss protection selection	3B	BB	2	O	O	O	O	O	O	O	O	O	O	O	O
252	Override bias	3C	BC	2	O	O	O	O	×	O	O	O	×	O	O	O
253	Override gain	3D	BD	2	O	O	O	O	×	O	O	O	×	O	O	O
254	Main circuit power OFF waiting time	3E	BE	2	O	O	×	×	×	×	×	O	×	O	O	O
255	Life alarm status display	3F	BF	2	O	×	×	×	×	×	×	O	×	O	O	O
256	Inrush current limit circuit life display	40	C0	2	O	O	O	O	O	O	O	O	O	×	×	×
257	Control circuit capacitor life display	41	C1	2	O	O	O	O	O	O	O	O	O	×	×	×
258	Main circuit capacitor life display	42	C2	2	O	O	O	O	O	O	O	O	O	×	×	×
259	Main circuit capacitor life measuring	43	C3	2	O	O	O	O	O	O	O	O	O	×	×	×
260	PWM frequency automatic switchover	44	C4	2	O	O	O	O	O	O	O	O	O	O	O	O
261	Power failure stop selection	45	C5	2	O	O	O	O	O	O	O	O	O	O	O	O
262	Subtracted frequency at deceleration start	46	C6	2	O	O	O	O	×	O	O	O	×	O	O	O
263	Subtraction starting frequency	47	C7	2	O	O	O	O	×	O	O	O	×	O	O	O
264	Power-failure deceleration time 1	48	C8	2	O	O	O	O	×	O	O	O	×	O	O	O
265	Power-failure deceleration time 2	49	C9	2	O	O	O	O	×	O	O	O	×	O	O	O
266	Power failure deceleration time switchover frequency	4A	CA	2	O	O	O	O	×	O	O	O	×	O	O	O
267	Terminal 4 input selection	4B	CB	2	O	O	O	O	×	O	O	O	×	O	O	O
268	Monitor decimal digits selection	4C	CC	2	O	O	O	O	O	O	O	O	O	O	×	O
269	Parameter for manufacturer setting. Do not set.															
270	Stop-on contact/load torque high-speed frequency control selection	4E	CE	2	O	O	O	×	×	O	×	×	×	O	O	O
271	High-speed setting maximum current	4F	CF	2	O	O	O	×	×	O	×	×	×	O	O	O
272	Middle-speed setting minimum current	50	D0	2	O	O	O	×	×	O	×	×	×	O	O	O
273	Current averaging range	51	D1	2	O	O	O	×	×	O	×	×	×	O	O	O
274	Current averaging filter time constant	52	D2	2	O	O	O	×	×	O	×	×	×	O	O	O
275	Stop-on contact excitation current low-speed multiplying factor	53	D3	2	×	O	×	×	×	×	×	×	×	O	O	O
276	PWM carrier frequency at stop-on contact	54	D4	2	×	O	×	×	×	O	×	×	×	O	O	O
278	Brake opening frequency	56	D6	2	×	O	O	×	×	O	×	×	×	O	O	O
279	Brake opening current	57	D7	2	×	O	O	×	×	O	×	×	×	O	O	O
280	Brake opening current detection time	58	D8	2	×	O	O	×	×	O	×	×	×	O	O	O
281	Brake operation time at start	59	D9	2	×	O	O	×	×	O	×	×	×	O	O	O
282	Brake operation frequency	5A	DA	2	×	O	O	×	×	O	×	×	×	O	O	O
283	Brake operation time at stop	5B	DB	2	O	O	O	×	×	×	×	×	×	O	O	O
284	Deceleration detection function selection	5C	DC	2	O	O	O	×	×	O	×	×	×	O	O	O
285	Overspeed detection frequency (Speed deviation excess detection frequency)	5D	DD	2	×	O	O	×	×	O	×	×	×	O	O	O
286	Droop gain	5E	DE	2	×	O	O	×	×	O	×	×	×	O	O	O
287	Droop filter time constant	5F	DF	2	×	×	O	×	×	O	×	×	×	O	O	O
288	Droop function activation selection	60	E0	2	O	O	O	O	O	O	O	O	O	O	O	O
289	Inverter output terminal filter	61	E1	2	O	O	O	O	O	O	O	O	O	O	×	O
290	Monitor negative output selection	62	E2	2	O	O	O	O	×	O	O	O	×	O	×	O
291	Pulse train I/O selection	63	E3	2	O	O	O	×	×	O	×	×	×	O	O	O
292	Automatic acceleration/deceleration	64	E4	2	O	O	O	×	×	O	×	×	×	O	O	O
293	Acceleration/deceleration separate selection	65	E5	2	O	O	O	O	×	O	O	O	×	O	O	O
294	UV avoidance voltage gain	66	E6	2	O	O	O	O	O	O	O	O	O	O	O	O
295	Frequency change increment amount setting	67	E7	2	O	O	O	O	O	O	O	O	O	O	×	O
296	Password lock level	68	E8	2	O	O	O	O	×	O	O	O	×	O	×	O
297	Password lock/unlock	69	E9	2	O	O	O	O	O	O	O	O	O	O	O*5	O
298	Frequency search gain	6A	EA	2	O	O	×	×	×	O	O	×	×	O	×	O
299	Rotation direction detection selection at restarting	6B	EB	2	O	O	×	×	×	O	×	×	×	O	O	O
300	BCD input bias AX	00	80	3	O	O	O	O	×	O	O	O	×	O	O	O
301	BCD input gain AX	01	81	3	O	O	O	O	×	O	O	O	×	O	O	O
302	BIN input bias AX	02	82	3	O	O	O	O	×	O	O	O	×	O	O	O
303	BIN input gain AX	03	83	3	O	O	O	O	×	O	O	O	×	O	O	O

上正科技有限公司
購買、維修此手冊零組件
電話：037-466333
Email: service@repairtw.com
line id: @zzz
www.repairtw.com

Pr.	Name	Instruction code*1			Control method*2									Parameter		
		Read	Write	Extended	V/F	Magnetic flux	Vector: Speed control	Vector: Torque control	Vector: Position control	Sensorless: Speed control	Sensorless: Torque control	PM: Speed control	PM: Position control	Copy*3	Clear*3	All clear*3
304	Digital input and analog input compensation enable/disable selection AX	04	84	3	O	O	O	O	×	O	O	O	×	O	O	O
305	Read timing operation selection AX	05	85	3	O	O	O	O	×	O	O	O	×	O	O	O
306	Analog output signal selection AY	06	86	3	O	O	O	O	O	O	O	O	O	O	O	O
307	Setting for zero analog output AY	07	87	3	O	O	O	O	O	O	O	O	O	O	O	O
308	Setting for maximum analog output AY	08	88	3	O	O	O	O	O	O	O	O	O	O	O	O
309	Analog output signal voltage/current switchover AY	09	89	3	O	O	O	O	O	O	O	O	O	O	O	O
310	Analog meter voltage output selection AY	0A	8A	3	O	O	O	O	O	O	O	O	O	O	O	O
311	Setting for zero analog meter voltage output AY	0B	8B	3	O	O	O	O	O	O	O	O	O	O	O	O
312	Setting for maximum analog meter voltage output AY	0C	8C	3	O	O	O	O	O	O	O	O	O	O	O	O
313	DO0 output selection AY NC	0D	8D	3	O	O	O	O	O	O	O	O	O	O	×	O
314	DO1 output selection AY NC	0E	8E	3	O	O	O	O	O	O	O	O	O	O	×	O
315	DO2 output selection AY NC	0F	8F	3	O	O	O	O	O	O	O	O	O	O	×	O
316	DO3 output selection AY	10	90	3	O	O	O	O	O	O	O	O	O	O	×	O
317	DO4 output selection AY	11	91	3	O	O	O	O	O	O	O	O	O	O	×	O
318	DO5 output selection AY	12	92	3	O	O	O	O	O	O	O	O	O	O	×	O
319	DO6 output selection AY	13	93	3	O	O	O	O	O	O	O	O	O	O	×	O
320	RA1 output selection AR	14	94	3	O	O	O	O	O	O	O	O	O	O	×	O
321	RA2 output selection AR	15	95	3	O	O	O	O	O	O	O	O	O	O	×	O
322	RA3 output selection AR	16	96	3	O	O	O	O	O	O	O	O	O	O	×	O
323	AM0 0V adjustment AY	17	97	3	O	O	O	O	O	O	O	O	O	O	×	O
324	AM1 0mA adjustment AY	18	98	3	O	O	O	O	O	O	O	O	O	O	×	O
329	Digital input unit selection AX	1D	9D	3	O	O	O	O	×	O	O	O	×	O	×	O
331	RS-485 communication station number	1F	9F	3	O	O	O	O	O	O	O	O	O	O	O*4	O*4
332	RS-485 communication speed	20	A0	3	O	O	O	O	O	O	O	O	O	O	O*4	O*4
333	RS-485 communication stop bit length	21	A1	3	O	O	O	O	O	O	O	O	O	O	O*4	O*4
334	RS-485 communication parity check selection	22	A2	3	O	O	O	O	O	O	O	O	O	O	O*4	O*4
335	RS-485 communication retry count	23	A3	3	O	O	O	O	O	O	O	O	O	O	O*4	O*4
336	RS-485 communication check time interval	24	A4	3	O	O	O	O	O	O	O	O	O	O	O*4	O*4
337	RS-485 communication waiting time setting	25	A5	3	O	O	O	O	O	O	O	O	O	O	O*4	O*4
338	Communication operation command source	26	A6	3	O	O	O	O	O	O	O	O	O	O	O*4	O*4
339	Communication speed command source	27	A7	3	O	O	O	O	O	O	O	O	O	O	O*4	O*4
340	Communication startup mode selection	28	A8	3	O	O	O	O	O	O	O	O	O	O	O*4	O*4
341	RS-485 communication CR/LF selection	29	A9	3	O	O	O	O	O	O	O	O	O	O	O*4	O*4
342	Communication EEPROM write selection	2A	AA	3	O	O	O	O	O	O	O	O	O	O	O	O
343	Communication error count	2B	AB	3	O	O	O	O	O	O	O	O	O	×	×	×
345	DeviceNet address ND	2D	AD	3	O	O	O	O	O	O	O	O	O	O	O*4	O*4
346	DeviceNet baud rate ND	2E	AE	3	O	O	O	O	O	O	O	O	O	O	O*4	O*4
349	Communication reset selection NC ND NP	31	B1	3	O	O	O	O	O	O	O	O	O	O	O*4	O*4
350	Stop position command selection AP	32	B2	3	O	O	O	×	×	×	×	×	×	O	O	O
351	Orientation speed AP	33	B3	3	O	O	O	×	×	×	×	×	×	O	O	O
352	Creep speed AP	34	B4	3	O	O	O	×	×	×	×	×	×	O	O	O
353	Creep switchover position AP	35	B5	3	O	O	O	×	×	×	×	×	×	O	O	O
354	Position loop switchover position AP	36	B6	3	O	O	O	×	×	×	×	×	×	O	O	O
355	DC injection brake start position AP	37	B7	3	O	O	O	×	×	×	×	×	×	O	O	O
356	Internal stop position command AP	38	B8	3	O	O	O	×	×	×	×	×	×	O	O	O
357	Orientation in-position zone AP	39	B9	3	O	O	O	×	×	×	×	×	×	O	O	O
358	Servo torque selection AP	3A	BA	3	O	O	O	×	×	×	×	×	×	O	O	O
359	Encoder rotation direction AP	3B	BB	3	O	O	O	O	O	×	×	×	O	O	O	O
360	16-bit data selection AP	3C	BC	3	O	O	O	×	×	×	×	×	×	O	O	O

上市科技有限公司
購買、維修 此手冊委編作
電話：037-466833
Email：service@repairtw.com
Line ID：@zzzz
www.repairtw.com

Pr.	Name	Instruction code*1			Control method*2									Parameter		
		Read	Write	Extended	V/F	Magnetic flux	Vector: Speed control	Vector: Torque control	Vector: Position control	Sensorless: Speed control	Sensorless: Torque control	PM: Speed control	PM: Position control	Copy*3	Clear*3	All clear*3
361	Position shift AP	3D	BD	3	O	O	O	×	×	×	×	×	×	O	O	O
362	Orientation position loop gain AP	3E	BE	3	O	O	O	×	×	×	×	×	×	O	O	O
363	Completion signal output delay time AP	3F	BF	3	O	O	O	×	×	×	×	×	×	O	O	O
364	Encoder stop check time AP	40	C0	3	O	O	O	×	×	×	×	×	×	O	O	O
365	Orientation limit AP	41	C1	3	O	O	O	×	×	×	×	×	×	O	O	O
366	Recheck time AP	42	C2	3	O	O	O	×	×	×	×	×	×	O	O	O
367	Speed feedback range AP	43	C3	3	O	O	O	×	×	×	×	×	×	O	O	O
368	Feedback gain AP	44	C4	3	O	O	×	×	×	×	×	×	×	O	O	O
369	Number of encoder pulses AP	45	C5	3	O	O	O	O	O	×	×	×	O	O	O	O
374	Overspeed detection level	4A	CA	3	×	×	O	O	O	O	O	O	O	O	O	O
376	Encoder signal loss detection enable/disable selection AP	4C	CC	3	×	×	O	O	O	×	×	×	O	O	O	O
380	Acceleration S-pattern 1	50	D0	3	O	O	O	O	×	O	O	O	×	O	O	O
381	Deceleration S-pattern 1	51	D1	3	O	O	O	O	×	O	O	O	×	O	O	O
382	Acceleration S-pattern 2	52	D2	3	O	O	O	O	×	O	O	O	×	O	O	O
383	Deceleration S-pattern 2	53	D3	3	O	O	O	O	×	O	O	O	×	O	O	O
384	Input pulse division scaling factor	54	D4	3	O	O	O	O	×	O	O	O	×	O	O	O
385	Frequency for zero input pulse	55	D5	3	O	O	O	O	×	O	O	O	×	O	O	O
386	Frequency for maximum input pulse	56	D6	3	O	O	O	O	×	O	O	O	×	O	O	O
393	Orientation selection AP	5D	DD	3	×	×	O	×	×	×	×	×	×	O	O	O
396	Orientation speed gain (P term) AP	60	E0	3	×	×	O	×	×	×	×	×	×	O	O	O
397	Orientation speed integral time AP	61	E1	3	×	×	O	×	×	×	×	×	×	O	O	O
398	Orientation speed gain (D term) AP	62	E2	3	×	×	O	×	×	×	×	×	×	O	O	O
399	Orientation deceleration ratio AP	63	E3	3	×	×	O	×	×	×	×	×	×	O	O	O
414	PLC function operation selection	0E	8E	4	O	O	O	O	O	O	O	×	O	O	×	×
415	Inverter operation lock mode setting	0F	8F	4	O	O	O	O	O	O	O	×	O	O	O	O
416	Pre-scale function selection	10	90	4	O	O	O	O	O	O	O	×	O	O	O	O
417	Pre-scale setting value	11	91	4	O	O	O	O	O	O	O	×	O	O	O	O
418	Extension output terminal filter AY AR	12	92	4	O	O	O	O	O	O	O	O	O	O	×	O
419	Position command source selection	13	93	4	×	×	×	×	O	×	×	×	O	O	O	O
420	Command pulse scaling factor numerator (electronic gear numerator)	14	94	4	×	×	×	×	O	×	×	×	O	O	O	O
421	Command pulse multiplication denominator (electronic gear denominator)	15	95	4	×	×	×	×	O	×	×	×	O	O	O	O
422	Position control gain	16	96	4	×	×	×	×	O	×	×	×	O	O	O	O
423	Position feed forward gain	17	97	4	×	×	×	×	O	×	×	×	O	O	O	O
424	Position command acceleration/deceleration time constant	18	98	4	×	×	×	×	O	×	×	×	O	O	O	O
425	Position feed forward command filter	19	99	4	×	×	×	×	O	×	×	×	O	O	O	O
426	In-position width	1A	9A	4	×	×	×	×	O	×	×	×	O	O	O	O
427	Excessive level error	1B	9B	4	×	×	×	×	O	×	×	×	O	O	O	O
428	Command pulse selection	1C	9C	4	×	×	×	×	O	×	×	×	O	O	O	O
429	Clear signal selection	1D	9D	4	×	×	×	×	O	×	×	×	O	O	O	O
430	Pulse monitor selection	1E	9E	4	×	×	×	×	O	×	×	×	O	O	O	O
434	Network number (CC-Link IE) NCE	22	A2	4	O	O	O	O	O	O	O	O	O	O	O*4	O*4
435	Station number (CC-Link IE) NCE	23	A3	4	O	O	O	O	O	O	O	O	O	O	O*4	O*4
446	Model position control gain	2E	AE	4	×	×	×	×	O	×	×	×	O	O	O	O
447	Digital torque command bias AX	2F	AF	4	×	×	×	O	×	×	O	×	×	O	O	O
448	Digital torque command gain AX	30	B0	4	×	×	×	O	×	×	O	×	×	O	O	O
450	Second applied motor	32	B2	4	O	O	×	×	×	O	O	O	×	O	O	O
451	Second motor control method selection	33	B3	4	O	O	×	×	×	O	O	O	×	O	O	O
453	Second motor capacity	35	B5	4	×	O	×	×	×	O	O	O	×	O	O	O
454	Number of second motor poles	36	B6	4	×	O	×	×	×	O	O	O	×	O	O	O

上正科技有限公司
購買、維修此手冊零組件
電話：037-466333
Email: service@repairtw.com
Line id: @zzz
www.repairtw.com

Pr.	Name	Instruction code*1			Control method*2									Parameter		
		Read	Write	Extended	V/F	Magnetic flux	Vector: Speed control	Vector: Torque control	Vector: Position control	Sensorless: Speed control	Sensorless: Torque control	PM: Speed control	PM: Position control	Copy*3	Clear*3	All clear*3
455	Second motor excitation current	37	B7	4	×	O	×	×	×	O	O	×	×	O	×	O
456	Rated second motor voltage	38	B8	4	×	O	×	×	×	O	O	O	×	O	O	O
457	Rated second motor frequency	39	B9	4	×	O	×	×	×	O	O	O	×	O	O	O
458	Second motor constant (R1)	3A	BA	4	×	O	×	×	×	O	O	O	×	O	×	O
459	Second motor constant (R2)	3B	BB	4	×	O	×	×	×	O	O	×	×	O	×	O
460	Second motor constant (L1) / d-shaft inductance (Ld)	3C	BC	4	×	O	×	×	×	O	O	O	×	O	×	O
461	Second motor constant (L2) / q-shaft inductance (Lq)	3D	BD	4	×	O	×	×	×	O	O	O	×	O	×	O
462	Second motor constant (X)	3E	BE	4	×	O	×	×	×	O	O	×	×	O	×	O
463	Second motor auto tuning setting/status	3F	BF	4	×	O	×	×	×	O	O	O	×	O	×	O
464	Digital position control sudden stop deceleration time	40	C0	4	×	×	×	×	O	×	×	×	O	O	O	O
465	First target position lower 4 digits	41	C1	4	×	×	×	×	O	×	×	×	O	O	O	O
466	First target position upper 4 digits	42	C2	4	×	×	×	×	O	×	×	×	O	O	O	O
467	Second target position lower 4 digits	43	C3	4	×	×	×	×	O	×	×	×	O	O	O	O
468	Second target position upper 4 digits	44	C4	4	×	×	×	×	O	×	×	×	O	O	O	O
469	Third target position lower 4 digits	45	C5	4	×	×	×	×	O	×	×	×	O	O	O	O
470	Third target position upper 4 digits	46	C6	4	×	×	×	×	O	×	×	×	O	O	O	O
471	Fourth target position lower 4 digits	47	C7	4	×	×	×	×	O	×	×	×	O	O	O	O
472	Fourth target position upper 4 digits	48	C8	4	×	×	×	×	O	×	×	×	O	O	O	O
473	Fifth target position lower 4 digits	49	C9	4	×	×	×	×	O	×	×	×	O	O	O	O
474	Fifth target position upper 4 digits	4A	CA	4	×	×	×	×	O	×	×	×	O	O	O	O
475	Sixth target position lower 4 digits	4B	CB	4	×	×	×	×	O	×	×	×	O	O	O	O
476	Sixth target position upper 4 digits	4C	CC	4	×	×	×	×	O	×	×	×	O	O	O	O
477	Seventh target position lower 4 digits	4D	CD	4	×	×	×	×	O	×	×	×	O	O	O	O
478	Seventh target position upper 4 digits	4E	CE	4	×	×	×	×	O	×	×	×	O	O	O	O
479	Eighth target position lower 4 digits	4F	CF	4	×	×	×	×	O	×	×	×	O	O	O	O
480	Eighth target position upper 4 digits	50	D0	4	×	×	×	×	O	×	×	×	O	O	O	O
481	Ninth target position lower 4 digits	51	D1	4	×	×	×	×	O	×	×	×	O	O	O	O
482	Ninth target position upper 4 digits	52	D2	4	×	×	×	×	O	×	×	×	O	O	O	O
483	Tenth target position lower 4 digits	53	D3	4	×	×	×	×	O	×	×	×	O	O	O	O
484	Tenth target position upper 4 digits	54	D4	4	×	×	×	×	O	×	×	×	O	O	O	O
485	Eleventh target position lower 4 digits	55	D5	4	×	×	×	×	O	×	×	×	O	O	O	O
486	Eleventh target position upper 4 digits	56	D6	4	×	×	×	×	O	×	×	×	O	O	O	O
487	Twelfth target position lower 4 digits	57	D7	4	×	×	×	×	O	×	×	×	O	O	O	O
488	Twelfth target position upper 4 digits	58	D8	4	×	×	×	×	O	×	×	×	O	O	O	O
489	Thirteenth target position lower 4 digits	59	D9	4	×	×	×	×	O	×	×	×	O	O	O	O
490	Thirteenth target position upper 4 digits	5A	DA	4	×	×	×	×	O	×	×	×	O	O	O	O
491	Fourteenth target position lower 4 digits	5B	DB	4	×	×	×	×	O	×	×	×	O	O	O	O
492	Fourteenth target position upper 4 digits	5C	DC	4	×	×	×	×	O	×	×	×	O	O	O	O
493	Fifteenth target position lower 4 digits	5D	DD	4	×	×	×	×	O	×	×	×	O	O	O	O
494	Fifteenth target position upper 4 digits	5E	DE	4	×	×	×	×	O	×	×	×	O	O	O	O
495	Remote output selection	5F	DF	4	O	O	O	O	O	O	O	O	O	O	O	O
496	Remote output data 1	60	E0	4	O	O	O	O	O	O	O	O	O	×	×	×
497	Remote output data 2	61	E1	4	O	O	O	O	O	O	O	O	O	×	×	×
498	PLC function flash memory clear	62	E2	4	O	O	O	O	O	O	O	×	O	×	×	×
500	Communication error execution waiting time NC ND NP	00	80	5	O	O	O	O	O	O	O	O	O	O	O	O
501	Communication error occurrence count display NC ND NP	01	81	5	O	O	O	O	O	O	O	O	O	×	O	O
502	Stop mode selection at communication error	02	82	5	O	O	O	O	O	O	O	O	O	O	O	O
503	Maintenance timer 1	03	83	5	O	O	O	O	O	O	O	O	O	×	×	×
504	Maintenance timer 1 warning output set time	04	84	5	O	O	O	O	O	O	O	O	O	O	×	O
505	Speed setting reference	05	85	5	O	O	O	O	O	O	O	O	O	O	O	O
516	S-pattern time at a start of acceleration	10	90	5	O	O	O	O	×	O	O	O	×	O	O	O
517	S-pattern time at a completion of acceleration	11	91	5	O	O	O	O	×	O	O	O	×	O	O	O
518	S-pattern time at a start of deceleration	12	92	5	O	O	O	O	×	O	O	O	×	O	O	O

上達科技有限公司
購買維修 此手冊零組件
電話：037-466333
Email：service@repairtw.com
Line id：@zzzz
www.repairtw.com

Pr.	Name	Instruction code*1			Control method*2									Parameter		
		Read	Write	Extended	V/F	Magnetic flux	Vector: Speed control	Vector: Torque control	Vector: Position control	Sensorless: Speed control	Sensorless: Torque control	PM: Speed control	PM: Position control	Copy*3	Clear*3	All clear*3
519	S-pattern time at a completion of deceleration	13	93	5	O	O	O	O	×	O	O	O	×	O	O	O
522	Output stop frequency	16	96	5	O	O	O	O	O	O	O	O	O	O	O	O
539	Modbus-RTU communication check time interval	27	A7	5	O	O	O	O	O	O	O	O	O	O	O*4	O*4
541	Frequency command sign selection NC NCE NP	29	A9	5	O	O	O	×	×	O	×	O	×	O	O*4	O*4
542	Communication station number (CC-Link) NC	2A	AA	5	O	O	O	O	O	O	O	O	O	O	O*4	O*4
543	Baud rate selection (CC-Link) NC	2B	AB	5	O	O	O	O	O	O	O	O	O	O	O*4	O*4
544	CC-Link extended setting NC	2C	AC	5	O	O	O	O	O	O	O	O	O	O	O*4	O*4
547	USB communication station number	2F	AF	5	O	O	O	O	O	O	O	O	O	O	O*4	O*4
548	USB communication check time interval	30	B0	5	O	O	O	O	O	O	O	O	O	O	O*4	O*4
549	Protocol selection	31	B1	5	O	O	O	O	O	O	O	O	O	O	O*4	O*4
550	NET mode operation command source selection	32	B2	5	O	O	O	O	O	O	O	O	O	O	O*4	O*4
551	PU mode operation command source selection	33	B3	5	O	O	O	O	O	O	O	O	O	O	O*4	O*4
552	Frequency jump range	34	B4	5	O	O	O	O	×	O	O	O	×	O	O	O
553	PID deviation limit	35	B5	5	O	O	O	×	×	O	×	O	×	O	O	O
554	PID signal operation selection	36	B6	5	O	O	O	×	×	O	×	O	×	O	O	O
555	Current average time	37	B7	5	O	O	O	O	O	O	O	O	O	O	O	O
556	Data output mask time	38	B8	5	O	O	O	O	O	O	O	O	O	O	O	O
557	Current average value monitor signal output reference current	39	B9	5	O	O	O	O	O	O	O	O	O	O	O	O
560	Second frequency search gain	3C	BC	5	O	O	×	×	×	O	O	×	×	O	×	O
561	PTC thermistor protection level	3D	BD	5	O	O	O	O	O	O	O	O	O	O	×	O
563	Energization time carrying-over times	3F	BF	5	O	O	O	O	O	O	O	O	O	×	×	×
564	Operating time carrying-over times	40	C0	5	O	O	O	O	O	O	O	O	O	×	×	×
569	Second motor speed control gain	45	C5	5	×	O	×	×	×	×	×	×	×	O	×	O
570	Multiple rating setting	46	C6	5	O	O	O	O	O	O	O	O	O	O	×	×
571	Holding time at a start	47	C7	5	O	O	O	O	×	O	O	×	×	O	O	O
573	4 mA input check selection	49	C9	5	O	O	O	O	×	O	O	×	×	O	O	O
574	Second motor online auto tuning	4A	CA	5	×	O	×	×	×	O	O	×	×	O	O	O
575	Output interruption detection time	4B	CB	5	O	O	O	×	×	O	×	O	×	O	O	O
576	Output interruption detection level	4C	CC	5	O	O	O	×	×	O	×	O	×	O	O	O
577	Output interruption cancel level	4D	CD	5	O	O	O	×	×	O	×	O	×	O	O	O
592	Traverse function selection	5C	DC	5	O	O	O	×	×	O	×	×	×	O	O	O
593	Maximum amplitude amount	5D	DD	5	O	O	O	×	×	O	×	×	×	O	O	O
594	Amplitude compensation amount during deceleration	5E	DE	5	O	O	O	×	×	O	×	×	×	O	O	O
595	Amplitude compensation amount during acceleration	5F	DF	5	O	O	O	×	×	O	×	×	×	O	O	O
596	Amplitude acceleration time	60	E0	5	O	O	O	×	×	O	×	×	×	O	O	O
597	Amplitude deceleration time	61	E1	5	O	O	O	×	×	O	×	×	×	O	O	O
598	Undervoltage level	62	E2	5	O	O	O	O	O	O	O	×	O	O	O	O
599	X10 terminal input selection	63	E3	5	O	O	O	O	O	O	O	O	O	O	O	O
600	First free thermal reduction frequency 1	64	E4	5	O	O	O	O	O	O	O	O	O	O	O	O
601	First free thermal reduction ratio 1	65	E5	5	O	O	O	O	O	O	O	O	O	O	O	O
602	First free thermal reduction frequency 2	66	E6	5	O	O	O	O	O	O	O	O	O	O	O	O
603	First free thermal reduction ratio 2	67	E7	5	O	O	O	O	O	O	O	O	O	O	O	O
604	First free thermal reduction frequency 3	68	E8	5	O	O	O	O	O	O	O	O	O	O	O	O
609	PID set point/deviation input selection	09	89	6	O	O	O	×	×	O	×	O	×	O	O	O
610	PID measured value input selection	0A	8A	6	O	O	O	×	×	O	×	O	×	O	O	O
611	Acceleration time at a restart	0B	8B	6	O	O	O	×	×	O	×	O	×	O	O	O
639	Brake opening current selection	27	A7	6	×	O	O	×	×	O	×	O	×	O	O	O
640	Brake operation frequency selection	28	A8	6	×	×	O	×	×	O	×	O	×	O	O	O
641	Second brake sequence operation selection	29	A9	6	×	O	O	×	×	O	×	O	×	O	O	O
642	Second brake opening frequency	2A	AA	6	×	O	O	×	×	O	×	O	×	O	O	O
643	Second brake opening current	2B	AB	6	×	O	O	×	×	O	×	O	×	O	O	O
644	Second brake opening current detection time	2C	AC	6	×	O	O	×	×	O	×	O	×	O	O	O
645	Second brake operation time at start	2D	AD	6	×	O	O	×	×	O	×	O	×	O	O	O
646	Second brake operation frequency	2E	AE	6	×	O	O	×	×	O	×	O	×	O	O	O

上正科技有限公司
購買、維修此手冊零組件
電話：02-46338
Email: service@repairtw.com
Line id: @zzz
www.repairtw.com

Pr.	Name	Instruction code*1			Control method*2									Parameter		
		Read	Write	Extended	V/F	Magnetic flux	Vector			Sensorless		PM		Copy*3	Clear*3	All clear*3
							Speed control	Torque control	Position control	Speed control	Torque control	Speed control	Position control			
647	Second brake operation time at stop	2F	AF	6	×	○	○	×	×	○	×	○	×	○	○	○
648	Second deceleration detection function selection	30	B0	6	×	○	○	×	×	○	×	○	×	○	○	○
650	Second brake opening current selection	32	B2	6	×	○	○	×	×	○	×	○	×	○	○	○
651	Second brake operation frequency selection	33	B3	6	×	×	○	×	×	○	×	○	×	○	○	○
653	Speed smoothing control	35	B5	6	○	○	×	×	×	×	×	×	×	○	○	○
654	Speed smoothing cutoff frequency	36	B6	6	○	○	×	×	×	×	×	×	×	○	○	○
655	Analog remote output selection	37	B7	6	○	○	○	○	○	○	○	○	○	○	○	○
656	Analog remote output 1	38	B8	6	○	○	○	○	○	○	○	○	○	×	×	×
657	Analog remote output 2	39	B9	6	○	○	○	○	○	○	○	○	○	×	×	×
658	Analog remote output 3	3A	BA	6	○	○	○	○	○	○	○	○	○	×	×	×
659	Analog remote output 4	3B	BB	6	○	○	○	○	○	○	○	○	○	×	×	×
660	Increased magnetic excitation deceleration operation selection	3C	BC	6	○	○	○	×	×	○	×	×	×	○	○	○
661	Magnetic excitation increase rate	3D	BD	6	○	○	○	×	×	○	×	×	×	○	○	○
662	Increased magnetic excitation current level	3E	BE	6	○	○	×	×	×	×	×	×	×	○	○	○
663	Control circuit temperature signal output level	3F	BF	6	○	○	○	○	○	○	○	○	○	○	○	○
665	Regeneration avoidance frequency gain	41	C1	6	×	○	○	×	×	○	×	○	×	○	○	○
684	Tuning data unit switchover	54	D4	6	×	○	○	×	×	○	×	○	×	○	○	○
686	Maintenance timer 2	56	D6	6	×	×	○	×	×	○	×	○	×	○	○	○
687	Maintenance timer 2 warning output set time	57	D7	6	○	○	×	×	×	×	×	×	×	○	○	○
688	Maintenance timer 3	58	D8	6	○	○	×	×	×	×	×	×	×	○	○	○
689	Maintenance timer 3 warning output set time	59	D9	6	○	○	○	○	○	○	○	○	○	○	○	○
690	Deceleration check timeDeceleration check	5A	DA	6	○	○	○	○	○	○	○	○	○	×	×	×
692	Second free thermal reduction frequency 1	5C	DC	6	○	○	○	○	○	○	○	○	○	×	×	×
693	Second free thermal reduction ratio 1	5D	DD	6	○	○	○	○	○	○	○	○	○	×	×	×
694	Second free thermal reduction frequency 2	5E	DE	6	○	○	○	○	○	○	○	○	○	×	×	×
695	Second free thermal reduction ratio 2	5F	DF	6	○	○	○	×	×	○	×	×	×	○	○	○
696	Second free thermal reduction frequency 3	60	E0	6	○	○	○	×	×	○	×	×	×	○	○	○
699	Input terminal filter	63	E3	6	○	○	×	×	×	×	×	×	×	○	○	○
702	Maximum motor frequencyMaximum motor frequency	02	82	7	×	○	○	×	×	○	×	○	×	○	○	○
706	Induced voltage constant (phi f)	06	86	7	×	○	○	×	×	○	×	○	×	○	○	○
707	Motor inertia (integer)	07	87	7	×	×	○	×	×	○	×	○	×	○	○	○
711	Motor Ld decay ratio	0B	8B	7	○	○	×	×	×	×	×	×	×	○	○	○
712	Motor Lq decay ratio	0C	8C	7	○	○	×	×	×	×	×	×	×	○	○	○
717	Starting resistance tuning compensation	11	91	7	○	○	○	○	○	○	○	○	○	○	○	○
721	Starting magnetic pole position detection pulse width	15	95	7	○	○	○	○	○	○	○	○	○	×	×	×
724	Motor inertia (exponent)	18	98	7	○	○	○	○	○	○	○	○	○	×	×	×
725	Motor protection current level	19	99	7	○	○	○	○	○	○	○	○	○	×	×	×
753	Second PID action selection	35	B5	7	○	○	○	○	○	○	○	○	○	×	×	×
754	Second PID control automatic switchover frequency	36	B6	7	○	○	○	×	×	○	×	×	×	○	○	○
755	Second PID action set point	37	B7	7	○	○	○	×	×	○	×	×	×	○	○	○
756	Second PID proportional band	38	B8	7	○	○	×	×	×	×	×	×	×	○	○	○
757	Second PID integral time	39	B9	7	×	○	○	×	×	○	×	○	×	○	○	○
758	Second PID differential time	3A	BA	7	×	○	○	×	×	○	×	○	×	○	○	○
759	PID unit selection	3B	BB	7	×	×	○	×	×	○	×	○	×	○	○	○
760	Pre-charge fault selection	3C	BC	7	○	○	×	×	×	×	×	×	×	○	○	○
761	Pre-charge ending level	3D	BD	7	○	○	○	×	×	○	×	○	×	○	○	○
762	Pre-charge ending time	3E	BE	7	○	○	○	×	×	○	×	○	×	○	○	○
763	Pre-charge upper detection level	3F	BF	7	○	○	○	×	×	○	×	○	×	○	○	○
764	Pre-charge time limit	40	C0	7	○	○	○	×	×	○	×	○	×	○	○	○
765	Second pre-charge fault selection	41	C1	7	○	○	○	×	×	○	×	○	×	○	○	○
766	Second pre-charge ending level	42	C2	7	○	○	○	×	×	○	×	○	×	○	○	○
767	Second pre-charge ending time	43	C3	7	○	○	○	×	×	○	×	○	×	○	○	○
768	Second pre-charge upper detection level	44	C4	7	○	○	○	×	×	○	×	○	×	○	○	○
769	Second pre-charge time limit	45	C5	7	○	○	○	×	×	○	×	○	×	○	○	○
774	Second motor inertia (integer)	4A	CA	7	○	○	○	○	○	○	○	○	○	○	○	○

上海修有限公司
購買入修修 加手机微信
電話：037-466333
Email: service@repairtw.com
Line id: @zzz
www.repairtw.com

Pr.	Name	Instruction code*1			Control method*2									Parameter		
		Read	Write	Extended	V/F	Magnetic flux	Vector: Speed control	Vector: Torque control	Vector: Position control	Sensorless: Speed control	Sensorless: Torque control	PM: Speed control	PM: Position control	Copy*3	Clear*3	All clear*3
775	Operation panel monitor selection 2	4B	CB	7	O	O	O	O	O	O	O	O	O	O	O	O
776	Operation panel monitor selection 3	4C	CC	7	O	O	O	O	O	O	O	O	O	O	O	O
777	4 mA input fault operation frequency	4D	CD	7	O	O	O	O	O	O	O	O	O	O	O	O
778	Current input check filter	4E	CE	7	O	O	O	O	O	O	O	O	O	O	O	O
779	Operation frequency during communication error	4F	CF	7	O	O	O	O	O	O	O	O	O	O	O	O
788	Low speed range torque characteristic selection	58	D8	7	×	×	×	×	×	×	×	O	×	O	O	O
791	Acceleration time in low-speed range	5B	DB	7	×	×	×	×	×	×	×	O	×	O	O	O
792	Deceleration time in low-speed range	5C	DC	7	×	×	×	×	×	×	×	O	×	O	O	O
799	Pulse increment setting for output power	63	E3	7	O	O	O	O	O	O	O	O	O	O	O	O
800	Control method selection	00	80	8	O	O	O	O	O	O	O	×	O	O	O	O
802	Pre-excitation selection	02	82	8	×	×	O	×	×	×	×	×	×	O	O	O
803	Constant power range torque characteristic selection	03	83	8	×	×	O	O	O	O	O	×	O	O	O	O
804	Torque command source selection	04	84	8	×	×	×	O	×	×	O	×	×	O	O	O
805	Torque command value (RAM)	05	85	8	×	×	×	O	×	×	O	×	×	×	O	O
806	Torque command value (RAM,EEPROM)	06	86	8	×	×	×	O	×	×	O	×	×	O	O	O
807	Speed limit selection	07	87	8	×	×	×	O	×	×	O	×	×	O	O	O
808	Forward rotation speed limit/speed limit	08	88	8	×	×	×	O	×	×	O	×	×	O	O	O
809	Reverse rotation speed limit/reverse-side speed limit	09	89	8	×	×	×	O	×	×	O	×	×	O	O	O
810	Torque limit input method selection	0A	8A	8	×	×	O	×	O	O	×	×	O	O	O	O
811	Set resolution switchover	0B	8B	8	O	O	O	O	O	O	O	×	O	O	O	O
812	Torque limit level (regeneration)	0C	8C	8	×	×	O	×	O	O	×	×	O	O	O	O
813	Torque limit level (3rd quadrant)	0D	8D	8	×	×	O	×	O	O	×	×	O	O	O	O
814	Torque limit level (4th quadrant)	0E	8E	8	×	×	O	×	O	O	×	×	O	O	O	O
815	Torque limit level 2	0F	8F	8	×	×	O	×	O	O	×	×	O	O	O	O
816	Torque limit level during acceleration	10	90	8	×	×	O	×	O	O	×	×	O	O	O	O
817	Torque limit level during deceleration	11	91	8	×	×	O	×	O	O	×	×	O	O	O	O
818	Easy gain tuning response level setting	12	92	8	×	×	O	×	O	O	×	×	O	O	O	O
819	Easy gain tuning selection	13	93	8	×	×	O	×	O	O	×	×	O	O	×	O
820	Speed control P gain 1	14	94	8	×	×	O	×	O	O	×	O	O	O	O	O
821	Speed control integral time 1	15	95	8	×	×	O	×	O	O	×	O	O	O	O	O
822	Speed setting filter 1	16	96	8	×	×	O	O	×	O	O	O	×	O	O	O
823	Speed detection filter 1 AP	17	97	8	×	×	O	O	O	×	×	×	O	O	O	O
824	Torque control P gain 1 (current loop proportional gain)	18	98	8	×	×	O	O	O	O	O	O	O	O	O	O
825	Torque control integral time 1 (current loop integral time)	19	99	8	×	×	O	O	O	O	O	O	O	O	O	O
826	Torque setting filter 1	1A	9A	8	×	×	O	O	O	O	O	×	O	O	O	O
827	Torque detection filter 1	1B	9B	8	×	×	O	O	O	O	O	O	O	O	O	O
828	Model speed control gain	1C	9C	8	×	×	O	×	O	O	×	O	O	O	O	O
830	Speed control P gain 2	1E	9E	8	×	×	O	×	O	O	×	O	O	O	O	O
831	Speed control integral time 2	1F	9F	8	×	×	O	×	O	O	×	O	O	O	O	O
832	Speed setting filter 2	20	A0	8	×	×	O	O	×	O	O	O	×	O	O	O
833	Speed detection filter 2 AP	21	A1	8	×	×	O	×	O	×	×	×	O	O	O	O
834	Torque control P gain 2	22	A2	8	×	×	O	O	O	O	O	O	O	O	O	O
835	Torque control integral time 2	23	A3	8	×	×	O	O	O	O	O	O	O	O	O	O
836	Torque setting filter 2	24	A4	8	×	×	O	O	O	O	O	×	O	O	O	O
837	Torque detection filter 2	25	A5	8	×	×	O	O	O	O	O	O	O	O	O	O
840	Torque bias selection AP	28	A8	8	×	×	O	×	×	×	×	×	×	O	O	O
841	Torque bias 1 AP	29	A9	8	×	×	O	×	×	×	×	×	×	O	O	O
842	Torque bias 2 AP	2A	AA	8	×	×	O	×	×	×	×	×	×	O	O	O
843	Torque bias 3 AP	2B	AB	8	×	×	O	×	×	×	×	×	×	O	O	O
844	Torque bias filter AP	2C	AC	8	×	×	O	×	×	×	×	×	×	O	O	O
845	Torque bias operation time AP	2D	AD	8	×	×	O	×	×	×	×	×	×	O	O	O
846	Torque bias balance compensation AP	2E	AE	8	×	×	O	×	×	×	×	×	×	O	O	O

上正科技有限公司
購買、維修此手冊零組件
電話：07-466333
Email: service@repairtw.com
Line id: @zzz
www.repairtw.com

Pr.	Name	Instruction code*1			Control method*2									Parameter		
		Read	Write	Extended	V/F	Magnetic flux	Vector: Speed control	Vector: Torque control	Vector: Position control	Sensorless: Speed control	Sensorless: Torque control	PM: Speed control	PM: Position control	Copy*3	Clear*3	All clear*3
847	Fall-time torque bias terminal 1 bias AP	2F	AF	8	×	×	O	×	×	×	×	×	×	O	O	O
848	Fall-time torque bias terminal 1 gain AP	30	B0	8	×	×	O	×	×	×	×	×	×	O	O	O
849	Analog input offset adjustment	31	B1	8	O	O	O	O	O	O	O	O	O	O	O	O
850	Brake operation selection	32	B2	8	×	×	×	×	×	O	O	×	×	O	O	O
853	Speed deviation time	35	B5	8	×	×	O	×	×	×	×	×	×	O	O	O
854	Excitation ratio	36	B6	8	×	×	O	O	O	O	O	×	O	O	O	O
858	Terminal 4 function assignment	3A	BA	8	O	O	O	O	O	O	O	×	O	O	×	O
859	Torque current/Rated PM motor current	3B	BB	8	×	O	O	O	O	O	O	O	O	O	×	O
860	Second motor torque current/Rated PM motor current	3C	BC	8	×	O	×	×	×	O	O	O	×	O	×	O
864	Torque detection	40	C0	8	×	×	O	O	O	O	O	×	O	O	O	O
865	Low speed detection	41	C1	8	×	×	O	O	O	O	O	×	O	O	O	O
866	Torque monitoring reference	42	C2	8	×	O	O	O	O	O	O	×	O	O	O	O
867	AM output filter	43	C3	8	O	O	O	O	O	O	O	O	O	O	O	O
868	Terminal 1 function assignment	44	C4	8	O	O	O	O	O	O	O	×	O	O	×	O
869	Current output filter	45	C5	8	O	O	O	O	O	O	O	O	O	O	O	O
870	Speed detection hysteresis	46	C6	8	O	O	O	O	O	O	O	O	O	O	O	O
872	Input phase loss protection selection	48	C8	8	O	O	O	O	O	O	O	O	O	O	O	O
873	Speed limit AP	49	C9	8	×	×	O	×	×	×	×	×	×	O	O	O
874	OLT level setting	4A	CA	8	×	×	O	×	O	O	×	O	O	O	O	O
875	Fault definition	4B	CB	8	O	O	O	O	×	O	O	O	×	O	O	O
877	Speed feed forward control/model adaptive speed control selection	4D	CD	8	×	×	O	×	O	O	×	×	O	O	O	O
878	Speed feed forward filter	4E	CE	8	×	×	O	×	O	O	×	×	O	O	O	O
879	Speed feed forward torque limit	4F	CF	8	×	×	O	×	O	O	×	×	O	O	O	O
880	Load inertia ratio	50	D0	8	×	×	O	×	O	O	×	×	O	O	×	O
881	Speed feed forward gain	51	D1	8	×	×	O	×	O	O	×	×	O	O	O	O
882	Regeneration avoidance operation selection	52	D2	8	O	O	O	×	×	O	×	O	×	O	O	O
883	Regeneration avoidance operation level	53	D3	8	O	O	O	×	×	O	×	O	×	O	O	O
884	Regeneration avoidance at deceleration detection sensitivity	54	D4	8	O	O	O	×	×	O	×	O	×	O	O	O
885	Regeneration avoidance compensation frequency limit value	55	D5	8	O	O	O	×	×	O	×	O	×	O	O	O
886	Regeneration avoidance voltage gain	56	D6	8	O	O	O	×	×	O	×	O	×	O	O	O
888	Free parameter 1	58	D8	8	O	O	O	O	O	O	O	O	O	O	×	×
889	Free parameter 2	59	D9	8	O	O	O	O	O	O	O	O	O	O	×	×
891	Cumulative power monitor digit shifted times	5B	DB	8	O	O	O	O	O	O	O	O	O	O	O	O
892	Load factor	5C	DC	8	O	O	O	O	O	O	O	O	O	O	O	O
893	Energy saving monitor reference (motor capacity)	5D	DD	8	O	O	O	O	O	O	O	O	O	O	O	O
894	Control selection during commercial power-supply operation	5E	DE	8	O	O	O	O	O	O	O	O	O	O	O	O
895	Power saving rate reference value	5F	DF	8	O	O	O	O	O	O	O	O	O	O	O	O
896	Power unit cost	60	E0	8	O	O	O	O	O	O	O	O	O	O	O	O
897	Power saving monitor average time	61	E1	8	O	O	O	O	O	O	O	O	O	O	O	O
898	Power saving cumulative monitor clear	62	E2	8	O	O	O	O	O	O	O	O	O	O	×	O
899	Operation time rate (estimated value)	63	E3	8	O	O	O	O	O	O	O	O	O	O	○	O
C0 (900)	FM/CA terminal calibration	5C	DC	1	O	O	O	O	O	O	O	O	O	O	×	O
C1 (901)	AM terminal calibration	5D	DD	1	O	O	O	O	O	O	O	O	O	O	×	O
C2 (902)	Terminal 2 frequency setting bias frequency	5E	DE	1	O	O	O	O	O	O	O	O	O	O	×	O
C3 (902)	Terminal 2 frequency setting bias	5E	DE	1	O	O	O	O	O	O	O	O	O	O	×	O
125 (903)	Terminal 2 frequency setting gain frequency	5F	DF	1	O	O	O	O	O	O	O	O	O	O	×	O
C4 (903)	Terminal 2 frequency setting gain	5F	DF	1	O	O	O	O	O	O	O	O	O	O	×	O

上林科技有限公司
購買、維修 此手冊零組件
電話:037-466333
Email:service@repairtw.com
line id: @zzz
www.repairtw.com

Pr.	Name	Instruction code*1			Control method*2									Parameter		
		Read	Write	Extended	V/F	Magnetic flux	Vector			Sensorless		PM		Copy*3	Clear*3	All clear*3
							Speed control	Torque control	Position control	Speed control	Torque control	Speed control	Position control			
C5 (904)	Terminal 4 frequency setting bias frequency	60	E0	1	O	O	O	O	O	O	O	O	O	O	×	O
C6 (904)	Terminal 4 frequency setting bias	60	E0	1	O	O	O	O	O	O	O	O	O	O	×	O
126 (905)	Terminal 4 frequency setting gain frequency	61	E1	1	O	O	O	O	O	O	O	O	O	O	×	O
C7 (905)	Terminal 4 frequency setting gain	61	E1	1	O	O	O	O	O	O	O	O	O	O	×	O
C12 (917)	Terminal 1 bias frequency (speed)	11	91	9	×	×	O	O	O	O	O	×	O	O	×	O
C13 (917)	Terminal 1 bias (speed)	11	91	9	×	×	O	O	O	O	O	×	O	O	×	O
C14 (918)	Terminal 1 gain frequency (speed)	12	92	9	×	×	O	O	O	O	O	×	O	O	×	O
C15 (918)	Terminal 1 gain (speed)	12	92	9	×	×	O	O	O	O	O	×	O	O	×	O
C16 (919)	Terminal 1 bias command (torque/magnetic flux)	13	93	9	×	×	O	O	O	O	O	×	O	O	×	O
C17 (919)	Terminal 1 bias (torque/magnetic flux)	13	93	9	×	×	O	O	O	O	O	×	O	O	×	O
C18 (920)	Terminal 1 gain command (torque/magnetic flux)	14	94	9	×	×	O	O	O	O	O	×	O	O	×	O
C19 (920)	Terminal 1 gain (torque/magnetic flux)	14	94	9	×	×	O	O	O	O	O	×	O	O	×	O
C8 (930)	Current output bias signal	1E	9E	9	O	O	O	O	O	O	O	O	O	O	O	O
C9 (930)	Current output bias current	1E	9E	9	O	O	O	O	O	O	O	O	O	O	O	O
C10 (931)	Current output gain signal	1F	9F	9	O	O	O	O	O	O	O	O	O	O	O	O
C11 (931)	Current output gain current	1F	9F	9	O	O	O	O	O	O	O	O	O	O	O	O
C38 (932)	Terminal 4 bias command (torque/magnetic flux)	20	A0	9	×	×	O	O	O	O	O	×	O	O	×	O
C39 (932)	Terminal 4 bias (torque/magnetic flux)	20	A0	9	×	×	O	O	O	O	O	×	O	O	×	O
C40 (933)	Terminal 4 gain command (torque/magnetic flux)	21	A1	9	×	×	O	O	O	O	O	×	O	O	×	O
C41 (933)	Terminal 4 gain (torque/magnetic flux)	21	A1	9	×	×	O	O	O	O	O	×	O	O	×	O
C42 (934)	PID display bias coefficient	22	A2	9	O	O	O	×	×	O	×	O	×	O	×	O
C43 (934)	PID display bias analog value	22	A2	9	O	O	O	×	×	O	×	O	×	O	×	O
C44 (935)	PID display gain coefficient	23	A3	9	O	O	O	×	×	O	×	O	×	O	×	O
C45 (935)	PID display gain analog value	23	A3	9	O	O	O	×	×	O	×	O	×	O	×	O
977	Input voltage mode selection	4D	CD	9	O	O	O	O	O	O	O	O	O	O	×	×
989	Parameter copy alarm release	59	D9	9	O	O	O	O	O	O	O	O	O	O	×	O
990	PU buzzer control	5A	DA	9	O	O	O	O	O	O	O	O	O	O	O	O
991	PU contrast adjustment	5B	DB	9	O	O	O	O	O	O	O	O	O	O	×	O
992	Operation panel setting dial push monitor selection	5C	DC	9	O	O	O	O	O	O	O	O	O	O	O	O
994	Droop break point gain	5E	DE	9	×	O	O	×	×	O	×	×	×	O	O	O
995	Droop break point torque	5F	DF	9	×	O	O	×	×	O	×	×	×	O	O	O
997	Fault initiation	61	E1	9	O	O	O	O	O	O	O	O	O	×	×	×
998	PM parameter initialization	62	E2	9	O	O	O	O	O	O	O	O	O	O	O	O
999	Automatic parameter setting	63	E3	9	O	O	O	O	O	O	O	O	O	×	×	O
1002	Lq tuning target current adjustment coefficient	02	80	A	×	×	×	×	×	×	×	O	×	O	O	O
1003	Notch filter frequency	03	83	A	×	×	O	×	O	O	×	O	O	O	O	O

上正科技有限公司
購買、維修 此手冊零組件
電話： 037-466333
Email: service@repairtw.com
Line id: @zzzz
www.repairtw.com

Pr.	Name	Instruction code*1			Control method*2									Parameter		
		Read	Write	Extended	V/F	Magnetic flux	Vector: Speed control	Vector: Torque control	Vector: Position control	Sensorless: Speed control	Sensorless: Torque control	PM: Speed control	PM: Position control	Copy*3	Clear*3	All clear*3
1004	Notch filter depth	04	84	A	×	×	O	×	O	O	×	O	O	O	O	O
1005	Notch filter width	05	85	A	×	×	O	×	O	O	×	O	O	O	O	O
1006	Clock (year)Clock (year)	06	86	A	O	O	O	O	O	O	O	O	O	×	×	×
1007	Clock (month, day)	07	87	A	O	O	O	O	O	O	O	O	O	×	×	×
1008	Clock (hour, minute)	08	88	A	O	O	O	O	O	O	O	O	O	×	×	×
1019	Analog meter voltage minus output selection AY	13	93	A	O	O	O	O	O	O	O	O	O	O	O	O
1020	Trace operation selection	14	94	A	O	O	O	O	O	O	O	O	O	O	O	O
1021	Trace mode selection	15	95	A	O	O	O	O	O	O	O	O	O	O	O	O
1022	Sampling cycleSampling cycle	16	96	A	O	O	O	O	O	O	O	O	O	O	O	O
1023	Number of analog channels	17	97	A	O	O	O	O	O	O	O	O	O	O	O	O
1024	Sampling auto start	18	98	A	O	O	O	O	O	O	O	O	O	O	O	O
1025	Trigger mode selection	19	99	A	O	O	O	O	O	O	O	O	O	O	O	O
1026	Number of sampling before trigger	1A	9A	A	O	O	O	O	O	O	O	O	O	O	O	O
1027	Analog source selection (1ch)	1B	9B	A	O	O	O	O	O	O	O	O	O	O	O	O
1028	Analog source selection (2ch)	1C	9C	A	O	O	O	O	O	O	O	O	O	O	O	O
1029	Analog source selection (3ch)	1D	9D	A	O	O	O	O	O	O	O	O	O	O	O	O
1030	Analog source selection (4ch)	1E	9E	A	O	O	O	O	O	O	O	O	O	O	O	O
1031	Analog source selection (5ch)	1F	9F	A	O	O	O	O	O	O	O	O	O	O	O	O
1032	Analog source selection (6ch)	20	A0	A	O	O	O	O	O	O	O	O	O	O	O	O
1033	Analog source selection (7ch)	21	A1	A	O	O	O	O	O	O	O	O	O	O	O	O
1034	Analog source selection (8ch)	22	A2	A	O	O	O	O	O	O	O	O	O	O	O	O
1035	Analog trigger channel	23	A3	A	O	O	O	O	O	O	O	O	O	O	O	O
1036	Analog trigger operation selection	24	A4	A	O	O	O	O	O	O	O	O	O	O	O	O
1037	Analog trigger level	25	A5	A	O	O	O	O	O	O	O	O	O	O	O	O
1038	Digital source selection (1ch)	26	A6	A	O	O	O	O	O	O	O	O	O	O	O	O
1039	Digital source selection (2ch)	27	A7	A	O	O	O	O	O	O	O	O	O	O	O	O
1040	Digital source selection (3ch)	28	A8	A	O	O	O	O	O	O	O	O	O	O	O	O
1041	Digital source selection (4ch)	29	A9	A	O	O	O	O	O	O	O	O	O	O	O	O
1042	Digital source selection (5ch)	2A	AA	A	O	O	O	O	O	O	O	O	O	O	O	O
1043	Digital source selection (6ch)	2B	AB	A	O	O	O	O	O	O	O	O	O	O	O	O
1044	Digital source selection (7ch)	2C	AC	A	O	O	O	O	O	O	O	O	O	O	O	O
1045	Digital source selection (8ch)	2D	AD	A	O	O	O	O	O	O	O	O	O	O	O	O
1046	Digital trigger channel	2E	AE	A	O	O	O	O	O	O	O	O	O	O	O	O
1047	Digital trigger operation selection	2F	AF	A	O	O	O	O	O	O	O	O	O	O	O	O
1048	Display-off waiting time	30	B0	A	O	O	O	O	O	O	O	O	O	O	O	O
1049	USB host reset	31	B1	A	O	O	O	O	O	O	O	O	O	×	×	×
1072	DC brake judgment time for vibration control operation	48	C8	A	×	×	O	×	×	O	×	O	×	O	O	O
1073	Vibration control operation selection	49	C9	A	×	×	O	×	×	O	×	O	×	O	O	O
1074	Vibration suppression frequency	4A	CA	A	×	×	O	×	×	O	×	O	×	O	O	O
1075	Vibration suppression depth	4B	CB	A	×	×	O	×	×	O	×	O	×	O	O	O
1076	Vibration suppression width	4C	CC	A	×	×	O	×	×	O	×	O	×	O	O	O
1077	Rope length	4D	CD	A	×	×	O	×	×	O	×	O	×	O	O	O
1078	Trolley weight	4E	CE	A	×	×	O	×	×	O	×	O	×	O	O	O
1079	Load weight	4F	CF	A	×	×	O	×	×	O	×	O	×	O	O	O
1103	Deceleration time at emergency stop	03	83	B	O	O	O	O	O	O	O	O	O	O	O	O
1106	Torque monitor filter	06	86	B	O	O	O	O	O	O	O	O	O	O	O	O
1107	Running speed monitor filter	07	87	B	O	O	O	O	O	O	O	O	O	O	O	O
1108	Excitation current monitor filter	08	88	B	O	O	O	O	O	O	O	O	O	O	O	O
1109	PROFIBUS communication command source selection NP	09	89	B	×	O	O	O	O	O	O	O	O	O	O	O
1110	PROFIBUS format selection NP	0A	8A	B	O	O	O	O	O	O	O	O	O	O	O	O
1113	Speed limit method selection	0D	8D	B	×	×	×	O	×	×	O	×	×	O	O	O
1114	Torque command reverse selection	0E	8E	B	×	×	×	O	×	×	O	×	×	O	O	O
1115	Speed control integral term clear time	0F	8F	B	×	×	O	×	O	O	×	O	O	O	O	O

上林科技有限公司
購買維修 此手冊終結件
電話: 037-466333
Email: service@repairtw.com
Line ID: @zzzz
www.repairtw.com

Pr.	Name	Instruction code*1			Control method*2									Parameter		
		Read	Write	Extended	V/F	Magnetic flux	Vector			Sensorless		PM		Copy*3	Clear*3	All clear*3
							Speed control	Torque control	Position control	Speed control	Torque control	Speed control	Position control			
1116	Constant output range speed control P gain compensation	10	90	B	×	×	O	×	O	O	×	O	O	O	O	O
1117	Speed control P gain 1 (per-unit system)	11	91	B	×	×	O	×	O	O	×	O	O	O	O	O
1118	Speed control P gain 2 (per-unit system)	12	92	B	×	×	O	×	O	O	×	O	O	O	O	O
1119	Model speed control gain (per-unit system)	13	93	B	×	×	O	×	O	O	×	O	O	O	O	O
1121	Per-unit speed control reference frequency	15	95	B	×	×	O	×	O	O	×	O	O	O	O	O
1134	PID upper limit manipulated value	22	A2	B	O	O	O	×	×	O	×	O	×	O	O	O
1135	PID lower limit manipulated value	23	A3	B	O	O	O	×	×	O	×	O	×	O	O	O
1136	Second PID display bias coefficient	24	A4	B	O	O	O	×	×	O	×	O	×	O	×	O
1137	Second PID display bias analog value	25	A5	B	O	O	O	×	×	O	×	O	×	O	×	O
1138	Second PID display gain coefficient	26	A6	B	O	O	O	×	×	O	×	O	×	O	×	O
1139	Second PID display gain analog value	27	A7	B	O	O	O	×	×	O	×	O	×	O	×	O
1140	Second PID set point/deviation input selection	28	A8	B	O	O	O	×	×	O	×	O	×	O	O	O
1141	Second PID measured value input selection	29	A9	B	O	O	O	×	×	O	×	O	×	O	O	O
1142	Second PID unit selection	2A	AA	B	O	O	O	×	×	O	×	O	×	O	O	O
1143	Second PID upper limit	2B	AB	B	O	O	O	×	×	O	×	O	×	O	O	O
1144	Second PID lower limit	2C	AC	B	O	O	O	×	×	O	×	O	×	O	O	O
1145	Second PID deviation limit	2D	AD	B	O	O	O	×	×	O	×	O	×	O	O	O
1146	Second PID signal operation selection	2E	AE	B	O	O	O	×	×	O	×	O	×	O	O	O
1147	Second output interruption detection time	2F	AF	B	O	O	O	×	×	O	×	O	×	O	O	O
1148	Second output interruption detection level	30	B0	B	O	O	O	×	×	O	×	O	×	O	O	O
1149	Second output interruption cancel level	31	B1	B	O	O	O	×	×	O	×	O	×	O	O	O
1150	User parameters 1	32	B2	B	O	O	O	O	O	O	O	×	O	O	O	O
1151	User parameters 2	33	B3	B	O	O	O	O	O	O	O	×	O	O	O	O
1152	User parameters 3	34	B4	B	O	O	O	O	O	O	O	×	O	O	O	O
1153	User parameters 4	35	B5	B	O	O	O	O	O	O	O	×	O	O	O	O
1154	User parameters 5	36	B6	B	O	O	O	O	O	O	O	×	O	O	O	O
1155	User parameters 6	37	B7	B	O	O	O	O	O	O	O	×	O	O	O	O
1156	User parameters 7	38	B8	B	O	O	O	O	O	O	O	×	O	O	O	O
1157	User parameters 8	39	B9	B	O	O	O	O	O	O	O	×	O	O	O	O
1158	User parameters 9	3A	BA	B	O	O	O	O	O	O	O	×	O	O	O	O
1159	User parameters 10	3B	BB	B	O	O	O	O	O	O	O	×	O	O	O	O
1160	User parameters 11	3C	BC	B	O	O	O	O	O	O	O	×	O	O	O	O
1161	User parameters 12	3D	BD	B	O	O	O	O	O	O	O	×	O	O	O	O
1162	User parameters 13	3E	BE	B	O	O	O	O	O	O	O	×	O	O	O	O
1163	User parameters 14	3F	BF	B	O	O	O	O	O	O	O	×	O	O	O	O
1164	User parameters 15	40	C0	B	O	O	O	O	O	O	O	×	O	O	O	O
1165	User parameters 16	41	C1	B	O	O	O	O	O	O	O	×	O	O	O	O
1166	User parameters 17	42	C2	B	O	O	O	O	O	O	O	×	O	O	O	O
1167	User parameters 18	43	C3	B	O	O	O	O	O	O	O	×	O	O	O	O
1168	User parameters 19	44	C4	B	O	O	O	O	O	O	O	×	O	O	O	O
1169	User parameters 20	45	C5	B	O	O	O	O	O	O	O	×	O	O	O	O
1170	User parameters 21	46	C6	B	O	O	O	O	O	O	O	×	O	O	O	O
1171	User parameters 22	47	C7	B	O	O	O	O	O	O	O	×	O	O	O	O
1172	User parameters 23	48	C8	B	O	O	O	O	O	O	O	×	O	O	O	O
1173	User parameters 24	49	C9	B	O	O	O	O	O	O	O	×	O	O	O	O
1174	User parameters 25	4A	CA	B	O	O	O	O	O	O	O	×	O	O	O	O
1175	User parameters 26	4B	CB	B	O	O	O	O	O	O	O	×	O	O	O	O
1176	User parameters 27	4C	CC	B	O	O	O	O	O	O	O	×	O	O	O	O
1177	User parameters 28	4D	CD	B	O	O	O	O	O	O	O	×	O	O	O	O
1178	User parameters 29	4E	CE	B	O	O	O	O	O	O	O	×	O	O	O	O
1179	User parameters 30	4F	CF	B	O	O	O	O	O	O	O	×	O	O	O	O
1180	User parameters 31	50	D0	B	O	O	O	O	O	O	O	×	O	O	O	O
1181	User parameters 32	51	D1	B	O	O	O	O	O	O	O	×	O	O	O	O
1182	User parameters 33	52	D2	B	O	O	O	O	O	O	O	×	O	O	O	O
1183	User parameters 34	53	D3	B	O	O	O	O	O	O	O	×	O	O	O	O
1184	User parameters 35	54	D4	B	O	O	O	O	O	O	O	×	O	O	O	O
1185	User parameters 36	55	D5	B	O	O	O	O	O	O	O	×	O	O	O	O

上正科技有限公司
購買、維修工控零組件
電話：037-466333
Email: service@repairtw.com
Line id: @rtzz
www.repairtw.com

Pr.	Name	Instruction code*1			Control method*2									Parameter		
		Read	Write	Extended	V/F	Magnetic flux	Vector: Speed control	Vector: Torque control	Vector: Position control	Sensorless: Speed control	Sensorless: Torque control	PM: Speed control	PM: Position control	Copy*3	Clear*3	All clear*3
1186	User parameters 37	56	D6	B	O	O	O	O	O	O	O	×	O	O	O	O
1187	User parameters 38	57	D7	B	O	O	O	O	O	O	O	×	O	O	O	O
1188	User parameters 39	58	D8	B	O	O	O	O	O	O	O	×	O	O	O	O
1189	User parameters 40	59	D9	B	O	O	O	O	O	O	O	×	O	O	O	O
1190	User parameters 41	5A	DA	B	O	O	O	O	O	O	O	×	O	O	O	O
1191	User parameters 42	5B	DB	B	O	O	O	O	O	O	O	×	O	O	O	O
1192	User parameters 43	5C	DC	B	O	O	O	O	O	O	O	×	O	O	O	O
1193	User parameters 44	5D	DD	B	O	O	O	O	O	O	O	×	O	O	O	O
1194	User parameters 45	5E	DE	B	O	O	O	O	O	O	O	×	O	O	O	O
1195	User parameters 46	5F	DF	B	O	O	O	O	O	O	O	×	O	O	O	O
1196	User parameters 47	60	E0	B	O	O	O	O	O	O	O	×	O	O	O	O
1197	User parameters 48	61	E1	B	O	O	O	O	O	O	O	×	O	O	O	O
1198	User parameters 49	62	E2	B	O	O	O	O	O	O	O	×	O	O	O	O
1199	User parameters 50	63	E3	B	O	O	O	O	O	O	O	×	O	O	O	O
1220	Target position/speed selection	14	94	C	×	×	×	×	O	×	×	×	O	O	O	O
1221	Start command edge detection selection	15	95	C	×	×	×	×	O	×	×	×	O	O	O	O
1222	First positioning acceleration time	16	96	C	×	×	×	×	O	×	×	×	O	O	O	O
1223	First positioning deceleration time	17	97	C	×	×	×	×	O	×	×	×	O	O	O	O
1224	First positioning dwell time	18	98	C	×	×	×	×	O	×	×	×	O	O	O	O
1225	First positioning sub-function	19	99	C	×	×	×	×	O	×	×	×	O	O	O	O
1226	Second positioning acceleration time	1A	9A	C	×	×	×	×	O	×	×	×	O	O	O	O
1227	Second positioning deceleration time	1B	9B	C	×	×	×	×	O	×	×	×	O	O	O	O
1228	Second positioning dwell time	1C	9C	C	×	×	×	×	O	×	×	×	O	O	O	O
1229	Second positioning sub-function	1D	9D	C	×	×	×	×	O	×	×	×	O	O	O	O
1230	Third positioning acceleration time	1E	9E	C	×	×	×	×	O	×	×	×	O	O	O	O
1231	Third positioning deceleration time	1F	9F	C	×	×	×	×	O	×	×	×	O	O	O	O
1232	Third positioning dwell time	20	A0	C	×	×	×	×	O	×	×	×	O	O	O	O
1233	Third positioning sub-function	21	A1	C	×	×	×	×	O	×	×	×	O	O	O	O
1234	Fourth positioning acceleration time	22	A2	C	×	×	×	×	O	×	×	×	O	O	O	O
1235	Fourth positioning deceleration time	23	A3	C	×	×	×	×	O	×	×	×	O	O	O	O
1236	Fourth positioning dwell time	24	A4	C	×	×	×	×	O	×	×	×	O	O	O	O
1237	Fourth positioning sub-function	25	A5	C	×	×	×	×	O	×	×	×	O	O	O	O
1238	Fifth positioning acceleration time	26	A6	C	×	×	×	×	O	×	×	×	O	O	O	O
1239	Fifth positioning deceleration time	27	A7	C	×	×	×	×	O	×	×	×	O	O	O	O
1240	Fifth positioning dwell time	28	A8	C	O	O	O	O	O	O	O	×	O	O	O	O
1241	Fifth positioning sub-function	29	A9	C	×	×	×	×	O	×	×	×	O	O	O	O
1242	Sixth positioning acceleration time	2A	AA	C	×	×	×	×	O	×	×	×	O	O	O	O
1243	Sixth positioning deceleration time	2B	AB	C	×	×	×	×	O	×	×	×	O	O	O	O
1244	Sixth positioning dwell time	2C	AC	C	×	×	×	×	O	×	×	×	O	O	O	O
1245	Sixth positioning sub-function	2D	AD	C	×	×	×	×	O	×	×	×	O	O	O	O
1246	Seventh positioning acceleration time	2E	AE	C	×	×	×	×	O	×	×	×	O	O	O	O
1247	Seventh positioning deceleration time	2F	AF	C	×	×	×	×	O	×	×	×	O	O	O	O
1248	Seventh positioning dwell time	30	B0	C	×	×	×	×	O	×	×	×	O	O	O	O
1249	Seventh positioning sub-function	31	B1	C	×	×	×	×	O	×	×	×	O	O	O	O
1250	Eighth positioning acceleration time	32	B2	C	×	×	×	×	O	×	×	×	O	O	O	O
1251	Eighth positioning deceleration time	33	B3	C	×	×	×	×	O	×	×	×	O	O	O	O
1252	Eighth positioning dwell time	34	B4	C	×	×	×	×	O	×	×	×	O	O	O	O
1253	Eighth positioning sub-function	35	B5	C	×	×	×	×	O	×	×	×	O	O	O	O
1254	Ninth positioning acceleration time	36	B6	C	×	×	×	×	O	×	×	×	O	O	O	O
1255	Ninth positioning deceleration time	37	B7	C	×	×	×	×	O	×	×	×	O	O	O	O
1256	Ninth positioning dwell time	38	B8	C	×	×	×	×	O	×	×	×	O	O	O	O
1257	Ninth positioning sub-function	39	B9	C	×	×	×	×	O	×	×	×	O	O	O	O
1258	Tenth positioning acceleration time	3A	BA	C	×	×	×	×	O	×	×	×	O	O	O	O
1259	Tenth positioning deceleration time	3B	BB	C	×	×	×	×	O	×	×	×	O	O	O	O
1260	Tenth positioning dwell time	3C	BC	C	×	×	×	×	O	×	×	×	O	O	O	O
1261	Tenth positioning sub-function	3D	BD	C	×	×	×	×	O	×	×	×	O	O	O	O
1262	Eleventh positioning acceleration time	3E	BE	C	×	×	×	×	O	×	×	×	O	O	O	O
1263	Eleventh positioning deceleration time	3F	BF	C	×	×	×	×	O	×	×	×	O	O	O	O

上元科技有限公司
購買本維修此手冊零組件
電話：037-466333
Email：service@repairtw.com
Line ID：@zzzz
www.repairtw.com

Pr.	Name	Instruction code*1			Control method*2									Parameter		
		Read	Write	Extended	V/F	Magnetic flux	Vector			Sensorless		PM		Copy*3	Clear*3	All clear*3
							Speed control	Torque control	Position control	Speed control	Torque control	Speed control	Position control			
1264	Eleventh positioning dwell time	40	C0	C	×	×	×	×	O	×	×	×	O	O	O	O
1265	Eleventh positioning sub-function	41	C1	C	×	×	×	×	O	×	×	×	O	O	O	O
1266	Twelfth positioning acceleration time	42	C2	C	×	×	×	×	O	×	×	×	O	O	O	O
1267	Twelfth positioning deceleration time	43	C3	C	×	×	×	×	O	×	×	×	O	O	O	O
1268	Twelfth positioning dwell time	44	C4	C	×	×	×	×	O	×	×	×	O	O	O	O
1269	Twelfth positioning sub-function	45	C5	C	×	×	×	×	O	×	×	×	O	O	O	O
1270	Thirteenth positioning acceleration time	46	C6	C	×	×	×	×	O	×	×	×	O	O	O	O
1271	Thirteenth positioning deceleration time	47	C7	C	×	×	×	×	O	×	×	×	O	O	O	O
1272	Thirteenth positioning sub-function	48	C8	C	×	×	×	×	O	×	×	×	O	O	O	O
1273	Thirteenth positioning dwell time	49	C9	C	×	×	×	×	O	×	×	×	O	O	O	O
1274	Fourteenth positioning acceleration time	4A	CA	C	×	×	×	×	O	×	×	×	O	O	O	O
1275	Fourteenth positioning deceleration time	4B	CB	C	×	×	×	×	O	×	×	×	O	O	O	O
1276	Fourteenth positioning dwell time	4C	CC	C	×	×	×	×	O	×	×	×	O	O	O	O
1277	Fourteenth positioning sub-function	4D	CD	C	×	×	×	×	O	×	×	×	O	O	O	O
1278	Fifteenth positioning acceleration time	4E	CE	C	×	×	×	×	O	×	×	×	O	O	O	O
1279	Fifteenth positioning deceleration time	4F	CF	C	×	×	×	×	O	×	×	×	O	O	O	O
1280	Fifteenth positioning dwell time	50	D0	C	×	×	×	×	O	×	×	×	O	O	O	O
1281	Fifteenth positioning sub-function	51	D1	C	×	×	×	×	O	×	×	×	O	O	O	O
1282	Home position return method selection	52	D2	C	×	×	×	×	O	×	×	×	O	O	O	O
1283	Home position return speed	53	D3	C	×	×	×	×	O	×	×	×	O	O	O	O
1284	Home position return creep speed	54	D4	C	×	×	×	×	O	×	×	×	O	O	O	O
1285	Home position shift amount lower 4 digits	55	D5	C	×	×	×	×	O	×	×	×	O	O	O	O
1286	Home position shift amount upper 4 digits	56	D6	C	×	×	×	×	O	×	×	×	O	O	O	O
1287	Travel distance after proximity dog ON lower 4 digits	57	D7	C	×	×	×	×	O	×	×	×	O	O	O	O
1288	Travel distance after proximity dog ON upper 4 digits	58	D8	C	×	×	×	×	O	×	×	×	O	O	O	O
1289	Home position return stopper torque	59	D9	C	×	×	×	×	O	×	×	×	O	×	×	×
1290	Home position return stopper waiting time	5A	DA	C	×	×	×	×	O	×	×	×	O	×	×	×
1292	Position control terminal input selection	5C	DC	C	×	×	×	×	O	×	×	×	O	×	×	×
1293	Roll feeding mode selection	5D	DD	C	×	×	×	×	O	×	×	×	O	×	×	×
1294	Position detection lower 4 digits	5E	DE	C	×	×	×	×	O	×	×	×	O	×	×	×
1295	Position detection upper 4 digits	5F	DF	C	×	×	×	×	O	×	×	×	O	×	×	×
1296	Position detection selection	60	E0	C	×	×	×	×	O	×	×	×	O	×	×	×
1297	Position detection hysteresis width	61	E1	C	×	×	×	×	O	×	×	×	O	×	×	×

上正企業有限公司
購買、維修此手冊零組件
電話：037-466333
Email: service@repairtw.com
Line id: @377zt
www.repairtw.com

Appendix4 For customers using HMS network options

(1) List of inverter monitored items

The following items can be set using a communication option.

16bit data

No.	Description	Unit	Type	Read/write
H0000	No data	-	-	-
H0001	Output frequency	0.01Hz	unsigned	R
H0002	Output current	0.01A/0.1A	unsigned	R
H0003	Output voltage	0.1V	unsigned	R
H0004	reserved	-	-	-
H0005	Frequency setting value	0.01Hz	unsigned	R
H0006	Motor speed	1r/min	unsigned	R
H0007	Motor torque	0.1%	unsigned	R
H0008	Converter output voltage	0.1V	unsigned	R
H0009	Regenerative brake duty	0.1%	unsigned	R
H000A	Electric thermal relay function load factor	0.1%	unsigned	R
H000B	Output current peak value	0.01A/0.1A	unsigned	R
H000C	Converter output voltage peak value	0.1V	unsigned	R
H000D	Input power	0.01kW/0.1kW	unsigned	R
H000E	Output power	0.01kW/0.1kW	unsigned	R
H000F	Input terminal status*1	-	-	R
H0010	Output terminal status*1	-	-	R
H0011	Load meter	0.1%	unsigned	R
H0012	Motor excitation current	0.01A/0.1A	unsigned	R
H0013	Position pulse	1	unsigned	R/W
H0014	Cumulative energization time	1h	unsigned	R
H0015	reserved	-	-	-
H0016	Orientation status	1	unsigned	R
H0017	Actual operation time	1h	unsigned	R
H0018	Motor load factor	0.1%	unsigned	R
H0019	Cumulative power	1kWh	unsigned	R
H001A to H001F	reserved	-	-	-
H0020	Torque order	0.1%	unsigned	R
H0021	Torque current order	0.1%	unsigned	R
H0022	Motor output	0.1kW	unsigend	R
H0023	Feedback pulse	1	unsigned	R
H0024 to H002D	reserved	-	-	-
H002E	Motor temperature			R
H002F to H0031	reserved	-	-	-
H0032	Power saving effect	-	unsigned	R
H0033	Cumulative saving power	-	unsigned	R
H0034	PID set point	0.1%	unsigned	R/W
H0035	PID measured value	0.1%	unsigned	R/W
H0036	PID deviation	0.1%	unsigned	R/W
H0037 to H0039	reserved	-	-	-
H003A	Option input terminal status1*1	-	-	R
H003B	Option input terminal status2*1	-	-	R
H003C	Option output terminal status*1	-	-	R
H003D	Motor thermal load factor	0.1%	unsigned	R
H003E	Transistor thermal load factor	0.1%	unsigned	R
H003F	reserved	-	-	-
H0040	PTC thermistor resistance	ohm	unsigned	R

上正科技有限公司
購買、維修.此手冊零組件
電話： 037-466333
Email: service@repairtw.com
Line Id: @zzz
www.repairtw.com

No.	Description	Unit	Type	Read/write
H0041	Output power (with regenerative display)			R
H0042	Cumulative regenerative power			R
H0043	reserved			
H0044	2nd PID set point	0.1%	unsigned	R/W
H0045	2nd PID measured value	0.1%	unsigned	R/W
H0046	2nd PID deviation	0.1%	unsigned	R/W
H0048 to H004F	reserved	-	-	-
H0050	Integrated power on time			R
H0051	Running time			R
H0052	Saving energy monitor			R
H0053	reserved	-	-	-
H0054	Fault code (1)	-	-	R
H0055	Fault code (2)	-	-	R
H0056	Fault code (3)	-	-	R
H0057	Fault code (4)	-	-	R
H0058	Fault code (5)	-	-	R
H0059	Fault code (6)	-	-	R
H005A	Fault code (7)	-	-	R
H005B	Fault code (8)	-	-	R
H00F9	Run command*2	-	-	R/W
H00FA to H01FF	reserved	-	-	-

*1 For details, refer to page 346.

*2 Run command

Users can specify the terminal function using this data. These bits function is depending on inverter parameter setting. (Refer to page 416)

b15															b0
-	-	-	-	RES	STOP	CS	JOG	MRS	RT	RH	RM	RL	-	-	AU

上正科技有限公司
購買、維修 此手冊零組件
電話： 037-466333
Email: service@repairtw.com
Line id: @zzzz
www.repairtw.com

<32bit data>

No.	Description	Unit	Type	Read/write
H0200	reserved	-	-	-
H0201	Output frequency (0-15bit)	0.01Hz	signed	R
H0202	Output frequency (16-31bit)			
H0203	Setting frsequency (0-15bit)	0.01Hz	signed	R
H0204	Setting frequency (16-31bit)			
H0205	Motor rotation (0-15bit)	0.1r/min	signed	R
H0206	Motor rotation (16-31bit)			
H0207	Load meter (0-15bit)	0.1%	signed	R
H0208	Load meter (16-31bit)			
H0209	Positioning pulse (0-15bit)	1	signed	R/W
H020A	Positioning pulse (16-31bit)			
H020B	Watt-hour meter (1kWh step) (0-15bit)	1kWh	unsigned	R
H020C	Watt-hour meter (1kWh step) (16-31bit)			
H020D	Watt-hour meter (0.1/0.01kWh step) (0-15bit)	0.1/0.01kWh	unsigned	R
H020E	Watt-hour meter(0.1/0.01kWh step) (16-31bit)			
H020F	Position error (0-15bit)	1	signed	R
H0210	Position error (16-31bit)			
H0211 to H03FF	reserved	-	-	-

(2) Direct command mode for position control

In the direct command mode, the target position and maximum speed can be set through communication.

Pr.	Name	Initial value	Setting range	Description
1220 B100	Target position/speed selection	0	0	Target position and maximum speed: Point table
			1	Target position: Direct command Maximum speed: Point table
			2	Target position and maximum speed: Direct command

- The point table is set as follows in the direct command mode. (The setting is applied when the start signal is turned ON.)

Pr.1220 setting	Target position	Maximum speed	Acceleration time	Deceleration time	Dwell time	Auxiliary function
1	Direct command	Point table 1	*1	*1	Invalid *2	*1
2	Direct command	Direct command	**Pr.7**	**Pr.8**	Invalid *2	*1

*1 Same as point table 1. However, even when continuous operation is set in the auxiliary function, individual operation is applied.

*2 The direct command mode is available only for individual operation. The dwell time is invalid.

- To perform positioning operation in the direct command mode, specify the point table (RH recommended) and turn ON the start signal. (When no point table is specified, home position return operation is performed.)
- Example when **Pr.1220**="1"

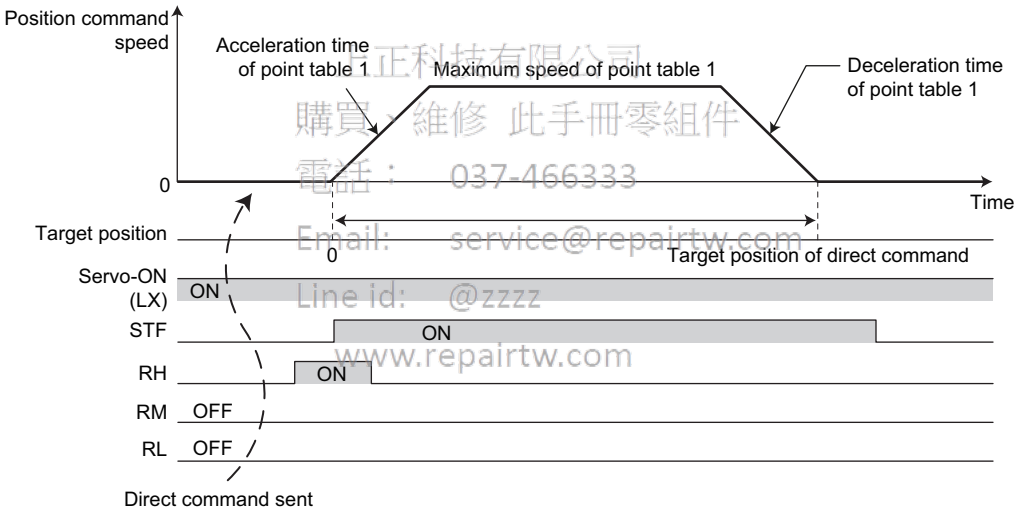

昌正科技有限公司
購買、維修 此手冊零組件
電話： 037-466333
Email: service@repairtw.com
Line id: @zzzz
www.repairtw.com

- Example when **Pr.1220**="2"

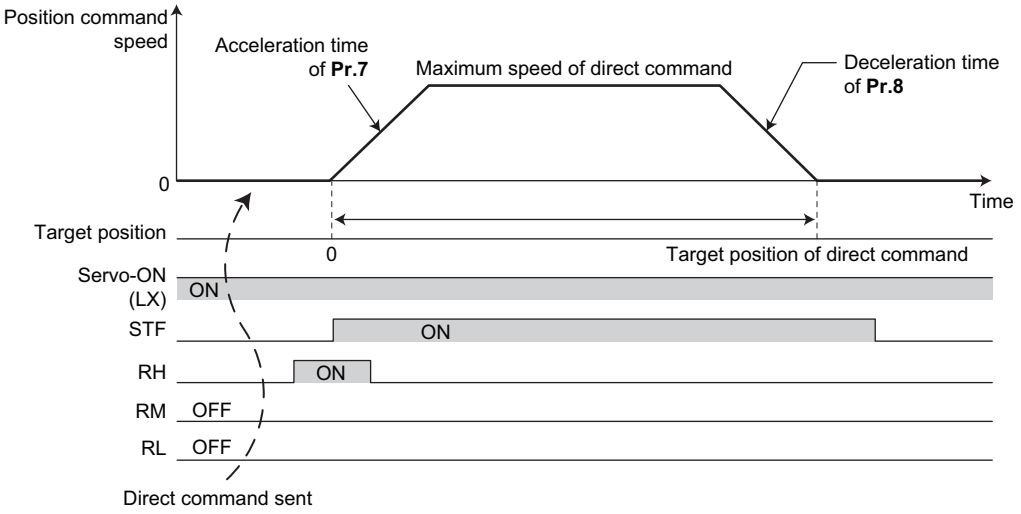

MEMO

上正科技有限公司
購買、維修 此手冊零組件
電話： 037-466333
Email: service@repairtw.com
Line id: @zzzz
www.repairtw.com

REVISIONS

*The manual number is given on the bottom left of the back cover.

Print Date	*Manual Number	Revision
May 2013	IB(NA)-0600503ENG-A	First edition
Dec. 2013	IB(NA)-0600503ENG-B	Addition • FR-A840-03250(110K) to FR-A840-06830(280K) • IP55 compatible model • Compatibility with FR-A8NP • SF-PR included (**Pr.71**(**Pr.450**) = "70, 73, or 74") • Vibration control (**Pr.1072 to Pr.1079**) • Position control functions added (**Pr.1289, Pr.1290** and **Pr.1292 to Pr.1297**)

上正科技有限公司
購買、維修 此手冊零組件
電話： 037-466333
Email: service@repairtw.com
Line id: @zzzz
www.repairtw.com

⚠ For Maximum Safety

- Mitsubishi inverters are not designed or manufactured to be used in equipment or systems in situations that can affect or endanger human life.
- When considering this product for operation in special applications such as machinery or systems used in passenger transportation, medical, aerospace, atomic power, electric power, or submarine repeating applications, please contact your nearest Mitsubishi sales representative.
- Although this product was manufactured under conditions of strict quality control, you are strongly advised to install safety devices to prevent serious accidents when it is used in facilities where breakdowns of the product are likely to cause a serious accident.

Please do not use this product for loads other than three-phase induction motors.

上
購買
電話
Email:
Line id
ww

MITSUBISHI ELECTRIC CORPORATION
HEAD OFFICE: TOKYO BUILDING 2-7-3, MARUNOUCHI, CHIYODA-KU, TOKYO 100-8310, JAPAN

Model	FR-A800 Instruction Manual (Detailed)
Model code	1A2-P52

IB(NA)-0600503ENG-B(1312)MEE Printed in Japan

Specifications subject to change without notice.