YASKAWA

YASKAWA AC Drive A1000

High Performance Vector Control Drive

Technical Manual

Type: CIMR-AC ☐☐☐☐

Models: 200 V Class: 0.4 to 110 kW
400 V Class: 0.4 to 355 kW

To properly use the product, read this manual thoroughly and retain for easy reference, inspection, and maintenance. Ensure the end user receives this manual.

上正科技有限公司
購買、維修 此手冊零組件
電話： 037-466333
Email: service@repairtw.com
Line id: @zzzz
www.repairtw.com

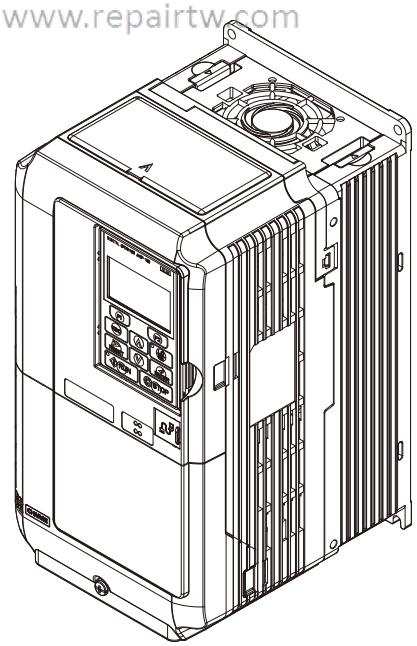

Receiving 1
Mechanical Installation 2
Electrical Installation 3
Start-Up Programming & Operation 4
Parameter Details 5
Troubleshooting 6
Periodic Inspection & Maintenance 7
Peripheral Devices & Options 8
Specifications A
Parameter List B
MEMOBUS/Modbus Communications C
Standards Compliance D
Quick Reference Sheet E

MANUAL NO. SIEP C710616 27C

上正科技有限公司
購買、維修 此手冊零組件
電話： 037-466333
Email: service@repairtw.com
Line id: @zzzz
www.repairtw.com

Copyright © 2008 YASKAWA ELECTRIC CORPORATION.

All rights reserved. No part of this publication may be reproduced, stored in a retrieval system, or transmitted, in any form, or by any means, mechanical, electronic, photocopying, recording, or otherwise, without the prior written permission of Yaskawa. No patent liability is assumed with respect to the use of the information contained herein. Moreover, because Yaskawa is constantly striving to improve its high-quality products, the information contained in this manual is subject to change without notice. Every precaution has been taken in the preparation of this manual. Nevertheless, Yaskawa assumes no responsibility for errors or omissions. Neither is any liability assumed for damages resulting from the use of the information contained in this publication.

◆ Quick Reference

Easily Set Parameters for Specific Applications	
Preset parameter defaults are available for setting up applications. *Refer to Application Selection on page 103*.	

Run a Motor One-Frame Larger
This drive can operate a motor one frame size larger when running variable torque loads such as fans and pumps. *Refer to C6-01: Drive Duty Mode Selection on page 177*.

Drive a Synchronous PM Motor	
A1000 can operate synchronous PM motors. *Refer to Subchart A-3: Operation with Permanent Magnet Motors on page 101*.	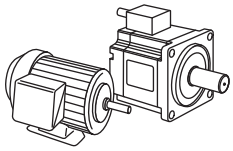

Perform Auto-Tuning
Automatic tuning sets motor parameters. *Refer to Auto-Tuning on page 109*.

Maintenance Check Using Drive Monitors
Use drive monitors to check the if fans, capacitors, and other components may require maintenance. *Refer to Performance Life Monitors Maintenance Monitors on page 349*.

Fault Display and Troubleshooting
Refer to Drive Alarms, Faults, and Errors on page 300 and *Refer to Troubleshooting without Fault Display on page 336*.

Standards Compliance	
Refer to on page 509 and *Refer to UL Standards on page 515*.	CE c UL us LISTED

上正科技有限公司
購買、維修 此手冊零組件
電話： 037-466339
Email: service@repairtw.com
Line id: @zzzz
www.repairtw.com

上正科技有限公司
購買、維修 此手冊零組件
電話： 037-466333
Email: service@repairtw.com
Line id: @zzzz
www.repairtw.com

Table of Contents

Quick Reference 3

I. PREFACE & GENERAL SAFETY 15
i.1 Preface 16
Applicable Documentation 16
Symbols 16
Terms and Abbreviations 16
i.2 General Safety 17
Supplemental Safety Information 17
Safety Messages 18
Application Notes 19
Notes on Motor Operation 21
Applications with Specialized Motors 22
Drive Label Warnings 24
Warranty Information 24

1. RECEIVING 25
1.1 Section Safety 26
1.2 General Description 27
A1000 Model Selection 27
Control Mode Selection 28
1.3 Model Number and Nameplate Check 29
Nameplate 29
1.4 Drive Models and Enclosure Types 31
1.5 Component Names 32
IP20/NEMA Type 1 Enclosure 32
IP00 Enclosure 32
Front Views 35

2. MECHANICAL INSTALLATION 37
2.1 Section Safety 38
2.2 Mechanical Installation 40
Installation Environment 40
Installation Orientation and Spacing 40
Digital Operator Remote Usage 42
Exterior and Mounting Dimensions 46

上茂科技有限公司
購買、維修 此手冊零組件
電話： 037-466333
Email: service@repairtw.com
Line id: @zzzz
www.repairtw.com

3. ELECTRICAL INSTALLATION 51
3.1 Section Safety. 52
3.2 Standard Connection Diagram 54
3.3 Main Circuit Connection Diagram. 56
Three-Phase 200 V Class (CIMR-A□2A0004 to 0081)
Three-Phase 400 V Class (CIMR-A□4A0002 to 0044) 56
Three-Phase 200 V Class (CIMR-A□2A0110, 0138)
Three-Phase 400 V Class (CIMR-A□4A0058, 0072) 56
Three-Phase 200 V Class (CIMR-A□2A0169 to 0415)
Three-Phase 400 V Class (CIMR-A□4A0088 to 0675) 56
3.4 Terminal Block Configuration 57
3.5 Terminal Cover 59
CIMR-A□2A0004 to 0081, 4A0002 to 0044 (IP20/NEMA Type 1 Enclosure) 59
CIMR-A□2A0110 to 0415, 4A0058 to 0675 (IP00 Enclosure) 60
3.6 Digital Operator and Front Cover 61
Removing/Reattaching the Digital Operator 61
Removing/Reattaching the Front Cover 61
3.7 Top Protective Cover 64
Removing the Top Protective Cover 64
Reattaching the Top Protective Cover 64
3.8 Main Circuit Wiring. 65
Main Circuit Terminal Functions 65
Protecting Main Circuit Terminals 65
Wire Gauges and Tightening Torque 66
Main Circuit Terminal and Motor Wiring 70
3.9 Control Circuit Wiring 72
Control Circuit Connection Diagram 72
Control Circuit Terminal Block Functions 72
Terminal Configuration 73
Wiring the Control Circuit Terminal 74
Switches and Jumpers on the Terminal Board 76
3.10 Control I/O Connections 77
Sinking/Sourcing Mode Switch for Digital Inputs 77
Sinking/Sourcing Mode Selection for Safe Disable Inputs 77
Using the Pulse Train Output 78
Terminal A2 Input Signal Selection 79
Terminal A3 Analog/PTC Input Selection 79
Terminal AM/FM Signal Selection 79
MEMOBUS/Modbus Termination 80
3.11 Connect to a PC 81
3.12 External Interlock 82
Drive Ready 82
3.13 Wiring Checklist 83

4. START-UP PROGRAMMING & OPERATION 85
4.1 Section Safety. 86
4.2 Using the Digital Operator. 87
Keys and Displays 87
LCD Display 88
ALARM (ALM) LED Displays 89
LO/RE LED and RUN LED Indications 89
Menu Structure for Digital Operator 90

上正科技有限公司
購買、維修 此手冊零組件
電話： 037-466333
Email: service@repairtw.com
Line id: @zzzz
www.repairtw.com

4.3 The Drive and Programming Modes . . . 91
Navigating the Drive and Programming Modes . . . 91
Changing Parameter Settings or Values . . . 92
Verifying Parameter Changes: Verify Menu . . . 94
Simplified Setup Using the Setup Group . . . 95
Switching Between LOCAL and REMOTE . . . 96
4.4 Start-Up Flowcharts . . . 98
Flowchart A: Basic Start-up and Motor Tuning . . . 98
Subchart A-1: Simple Motor Setup Using V/f Control . . . 99
Subchart A-2: High Performance Operation Using OLV or CLV . . . 100
Subchart A-3: Operation with Permanent Magnet Motors . . . 101
4.5 Powering Up the Drive . . . 102
Powering Up the Drive and Operation Status Display . . . 102
4.6 Application Selection . . . 103
Setting 1: Water Supply Pump Application . . . 103
Setting 2: Conveyor Application . . . 103
Setting 3: Exhaust Fan Application . . . 104
Setting 4: HVAC Fan Application . . . 104
Setting 5: Compressor Application . . . 105
Setting 6: Hoist Application . . . 105
Notes on Controlling the Brake when Using the Hoist Application Preset . . . 106
Setting 7: Traveling Application . . . 108
4.7 Auto-Tuning . . . 109
Types of Auto-Tuning . . . 109
Before Auto-Tuning the Drive . . . 111
Auto-Tuning Interruption and Fault Codes . . . 112
Auto-Tuning Operation Example . . . 112
Parameter Settings during Induction Motor Auto-Tuning: T1 . . . 114
Parameter Settings during PM Motor Auto-Tuning: T2 . . . 116
Parameter Settings during Inertia and Speed Control Loop Auto-Tuning: T3 . . . 119
4.8 No-Load Operation Test Run . . . 121
No-Load Operation Test Run . . . 121
4.9 Test Run with Load Connected . . . 123
Test Run with the Load Connected . . . 123
4.10 Verifying Parameter Settings and Backing Up Changes . . . 124
Backing Up Parameter Values: o2-03 . . . 124
Parameter Access Level: A1-01 . . . 124
Password Settings: A1-04, A1-05 . . . 124
Copy Function . . . 125
4.11 Test Run Checklist . . . 126

5. PARAMETER DETAILS . . . 129
5.1 A: Initialization . . . 130
A1: Initialization . . . 130
A2: User Parameters . . . 135
5.2 b: Application . . . 136
b1: Operation Mode Selection . . . 136
b2: DC Injection Braking and Short Circuit Braking . . . 144
b3: Speed Search . . . 146
b4: Delay Timers . . . 151
b5: PID Control . . . 152
b6: Dwell Function . . . 161
b7: Droop Control (CLV, CLV/PM) . . . 162
b8: Energy Saving . . . 163
b9: Zero Servo . . . 164

上正科技有限公司
購買、維修、此手冊零組件
電話： 027-46633
Email: service@repairtw.com
Line Id: @zzzz
www.repairtw.com

5.3 C: Tuning. 165
C1: Acceleration and Deceleration Times 165
C2: S-Curve Characteristics 167
C3: Slip Compensation 167
C4: Torque Compensation 170
C5: Automatic Speed Regulator (ASR) 171
C6: Carrier Frequency 177
5.4 d: Reference Settings 180
d1: Frequency Reference 180
d2: Frequency Upper/Lower Limits 182
d3: Jump Frequency 182
d4: Frequency Reference Hold and Up/Down 2 Function 183
d5: Torque Control 188
d6: Field Weakening and Field Forcing 192
d7: Offset Frequency 193
5.5 E: Motor Parameters 194
E1: V/f Pattern for Motor 1 194
E2: Motor 1 Parameters 198
E3: V/f Pattern for Motor 2 201
E4: Motor 2 Parameters 202
E5: PM Motor Settings 204
5.6 F: Option Settings 206
F1: PG Speed Control Card Settings 206
F2: Analog Input Card Settings 209
F3: Digital Input Card Settings 209
F4: Analog Monitor Card Settings 210
F5: Digital Output Card Settings 211
F6: Communication Option Card 211
CC-Link Parameters 213
MECHATROLINK Parameters 213
PROFIBUS-DP Parameters 213
CANopen Parameters 213
DeviceNet Parameters 213
5.7 H: Terminal Functions 214
H1: Multi-Function Digital Inputs 214
H2: Multi-Function Digital Outputs 224
H3: Multi-Function Analog Inputs 234
H4: Multi-Function Analog Outputs 239
H5: MEMOBUS/Modbus Serial Communication 241
H6: Pulse Train Input/Output 241
5.8 L: Protection Functions 244
L1: Motor Protection 244
L2: Momentary Power Loss Ride-Thru 249
L3: Stall Prevention 255
L4: Speed Detection 262
L5: Fault Restart 263
L6: Torque Detection 264
L7: Torque Limit 267
L8: Drive Protection 269

上正科技有限公司
購買、維修 此手冊零組件
電話： 037-466333
Email: service@repairtw.com
Line id: @zzzz
www.repairtw.com

5.9 n: Special Adjustments . . . 275
n1: Hunting Prevention . . . 275
n2: Speed Feedback Detection Control (AFR) Tuning . . . 276
n3: High Slip Braking (HSB) and Overexcitation Braking . . . 276
n5: Feed Forward Control . . . 279
n6: Online Tuning . . . 280
n8: PM Motor Control Tuning . . . 281
5.10 o: Operator Related Settings . . . 284
o1: Digital Operator Display Selection . . . 284
o2: Digital Operator Keypad Functions . . . 285
o3: Copy Function . . . 287
o4: Maintenance Monitor Settings . . . 288
q: DriveWorksEZ Parameters . . . 289
r: DriveWorksEZ Connection Parameters . . . 289
T: Motor Tuning . . . 290
5.11 U: Monitor Parameters . . . 291
U1: Operation Status Monitors . . . 291
U2: Fault Trace . . . 291
U3: Fault History . . . 291
U4: Maintenance Monitors . . . 291
U5: PID Monitors . . . 291
U6: Operation Status Monitors . . . 291
U8: DriveWorksEZ Monitors . . . 292

6. TROUBLESHOOTING . . . 293
6.1 Section Safety . . . 294
6.2 Motor Performance Fine-Tuning . . . 296
Fine-Tuning V/f Control and V/f Control with PG . . . 296
Fine-Tuning Open Loop Vector Control . . . 296
Fine-Tuning Closed Loop Vector Control . . . 297
Fine-Tuning Open Loop Vector Control for PM Motors . . . 297
Fine-Tuning Advanced Open Loop Vector Control for PM Motors . . . 298
Fine-Tuning Closed Loop Vector Control for PM Motors . . . 298
Parameters to Minimize Motor Hunting and Oscillation . . . 299
6.3 Drive Alarms, Faults, and Errors . . . 300
Types of Alarms, Faults, and Errors . . . 300
Alarm and Error Displays . . . 301
6.4 Fault Detection . . . 306
Fault Displays, Causes, and Possible Solutions . . . 306
6.5 Alarm Detection . . . 319
Alarm Codes, Causes, and Possible Solutions . . . 319
6.6 Operator Programming Errors . . . 325
oPE Codes, Causes, and Possible Solutions . . . 325
6.7 Auto-Tuning Fault Detection . . . 328
Auto-Tuning Codes, Causes, and Possible Solutions . . . 328
6.8 Copy Function Related Displays . . . 332
Tasks, Errors, and Troubleshooting . . . 332
6.9 Diagnosing and Resetting Faults . . . 334
Fault Occurs Simultaneously with Power Loss . . . 334
If the Drive Still has Power After a Fault Occurs . . . 334
Viewing Fault Trace Data After Fault . . . 334
Fault Reset Methods . . . 335

上正科技有限公司
購買、維修 此手冊零組件
電話： 037-466333
Email: service@repairtw.com
Line id: @zzzz
www.repairtw.com

6.10 Troubleshooting without Fault Display 336
Common Problems 336
Cannot Change Parameter Settings 336
Motor Does Not Rotate Properly after Pressing RUN Button or after Entering External Run Command 337
Motor is Too Hot 338
Drive Does Not Allow Selection the Desired Auto-Tuning Mode 338
oPE02 Error Occurs When Lowering the Motor Rated Current Setting 338
Motor Stalls during Acceleration or Acceleration Time is Too Long 338
Drive Frequency Reference Differs from the Controller Frequency Reference Command 339
Excessive Motor Oscillation and Erratic Rotation 339
Deceleration Takes Longer Than Expected with Dynamic Braking Enabled 339
Load Falls When Brake is Applied (Hoist-Type Applications) 339
Noise From Drive or Output Lines When the Drive is Powered On 340
Earth Leakage Circuit Breaker (ELCB) Trips During Run 340
Connected Machinery Vibrates When Motor Rotates 340
PID Output Fault 340
Insufficient Starting Torque 340
Motor Rotates After the Drive Output is Shut Off (Motor Rotates During DC Injection Braking) 341
Output Frequency is not as High as Frequency Reference 341
Buzzing Sound from Motor at 2 kHz 341
Unstable Motor Speed when Using PM 341
Motor Does Not Restart after Power Loss 341

7. PERIODIC INSPECTION & MAINTENANCE 343
7.1 Section Safety. 344
7.2 Inspection 347
Recommended Daily Inspection 347
Recommended Periodic Inspection 348
7.3 Periodic Maintenance 349
Replacement Parts 349
7.4 Cooling Fan and Circulation Fan 351
Number of Fan 351
Cooling Fan Component Names 352
Cooling Fan Replacement: 2A0021 to 2A0081 and 4A0007 to 4A0044 353
Cooling Fan Replacement: 2A0110 and 2A0138, 4A0058 and 4A0072 355
Cooling Fan Replacement: 4A0088 and 4A0103 357
Cooling Fan Replacement: 2A0169 to 2A0415, 4A0139 to 4A0362 359
Cooling Fan Replacement: 4A0414 363
Cooling Fan Replacement: 4A0515 and 4A0675 365
7.5 Drive Replacement. 369
Serviceable Parts 369
Terminal Board 369
Replacing the Drive 370

8. PERIPHERAL DEVICES & OPTIONS 373
8.1 Section Safety. 374
8.2 Drive Options and Peripheral Devices 375
8.3 Connecting Peripheral Devices 376
8.4 Option Card Installation. 377
Installing Option Cards 377
Installation Procedure 377

上亞科技有限公司
購買、維修 此手冊零組件
電話： 037-466333
Email: service@repairtw.com
Line id: @zzzz
www.repairtw.com

8.5 Installing Peripheral Devices 379
Dynamic Braking Options 379
Installing a Molded Case Circuit Breaker (MCCB) 381
Installing a Magnetic Contactor 382
Connecting an AC or DC Reactor 383
Connecting a Noise Filter 383
Installing Input Fuses 385
Attachment for External Heatsink 385
Installing a Motor Thermal Overload (oL) Relay on the Drive Output 386

A. SPECIFICATIONS 387
A.1 Heavy Duty and Normal Duty Ratings 388
A.2 Three-Phase 200 V Class Drives 389
A.3 Three-Phase 400 V Class Drives 390
A.4 Drive Specifications 391
A.5 Drive Watt Loss Data 393
A.6 Drive Derating Data 394
Carrier Frequency Derating 394
Temperature Derating 395
Altitude Derating 396

B. PARAMETER LIST 397
B.1 Understanding the Parameter Table 398
Control Modes, Symbols, and Terms 398
B.2 Parameter Groups 399
B.3 Parameter Table 400
A: Initialization Parameters 400
b: Application 401
C: Tuning 406
d: References 411
E: Motor Parameters 414
F: Options 418
H Parameters: Multi-Function Terminals 423
L: Protection Function 434
n: Special Adjustment 439
o: Operator Related Settings 442
q: DriveWorksEZ Parameters 444
r: DriveWorksEZ Connection Parameters 444
T: Motor Tuning 444
U: Monitors 447
B.4 Control Mode Dependent Parameter Default Values 454
A1-02 (Motor 1 Control Mode) Dependent Parameters 454
E3-01 (Motor 2 Control Mode) Dependent Parameters 455
B.5 V/f Pattern Default Values 456
B.6 Defaults by Drive Model Selection (o2-04) and ND/HD (C6-01) 457
B.7 Parameters that Change with the Motor Code Selection 463
YASKAWA SMRA Series SPM Motor 463
YASKAWA SSR1 Series IPM Motor (For Derated Torque) 464
YASKAWA SST4 Series IPM Motor (For Constant Torque) 470

上正科技有限公司
購買、維修 此手冊零組件
電話： 037-466333
Email: service@repairtw.com
Line id: @zzzz
www.repairtw.com

C. MEMOBUS/MODBUS COMMUNICATIONS 477
C.1 MEMOBUS/Modbus Configuration 478
C.2 Communication Specifications 479
C.3 Connecting to a Network 480
Network Cable Connection 480
Wiring Diagram for Multiple Connection 480
Network Termination 481
C.4 MEMOBUS/Modbus Setup Parameters 482
MEMOBUS/Modbus Serial Communication 482
C.5 Drive Operations by MEMOBUS/Modbus 485
Observing the Drive Operation 485
Controlling the Drive 485
C.6 Communications Timing 486
Command Messages from Master to Drive 486
Response Messages from Drive to Master 486
C.7 Message Format 487
Message Content 487
Slave Address 487
Function Code 487
Data 487
Error Check 487
C.8 Message Examples 489
Reading Drive MEMOBUS/Modbus Register Contents 489
Loopback Test 489
Writing to Multiple Registers 489
C.9 MEMOBUS/Modbus Data Table 491
Command Data 491
Monitor Data 492
Broadcast Messages 500
Fault Trace Contents 500
Alarm Register Contents 501
C.10 Enter Command 503
Enter Command Types 503
Enter Command Settings when Upgrading the Drive 503
C.11 Communication Errors 504
MEMOBUS/Modbus Error Codes 504
Slave Not Responding 504
C.12 Self-Diagnostics 505

D. STANDARDS COMPLIANCE 507
D.1 Section Safety 508
D.2 European Standards 510
CE Low Voltage Directive Compliance 510
EMC Guidelines Compliance 510
D.3 UL Standards 515
UL Standards Compliance 515
Drive Motor Overload Protection 516
D.4 Safe Disable Input Function 518
Specifications 518
Precautions 518
Using the Safe Disable Function 518

上正科技有限公司
購買、維修 此手冊零組件
電話： 037-466333
Email: service@repairtw.com
Line id: @zzzz
www.repairtw.com

E. QUICK REFERENCE SHEET 521
E.1 Drive and Motor Specifications 522
Drive Specifications 522
Motor Specifications 522
E.2 Basic Parameter Settings 523
Basic Setup 523
V/f Pattern Setup 523
Motor Setup 523
Multi-Function Digital Inputs 523
Pulse Train Input/Analog Inputs 523
Multi-Function Digital Outputs 523
Monitor Outputs 523
E.3 User Setting Table 524

Index 529

Revision History 543

上正科技有限公司
購買、維修 此手冊零組件
電話： 037-466333
Email: service@repairtw.com
Line id: @zzzz
www.repairtw.com

上正科技有限公司
購買、維修 此手冊零組件
電話： 037-466333
Email: service@repairtw.com
Line id: @zzzz
www.repairtw.com

Preface & General Safety

This section provides safety messages pertinent to this product that, if not heeded, may result in fatality, personal injury, or equipment damage. Yaskawa is not responsible for the consequences of ignoring these instructions.

I.1 PREFACE **16**
I.2 GENERAL SAFETY **17**

上正科技有限公司
購買、維修 此手冊零組件
電話： 037-466333
Email: service@repairtw.com
Line id: @zzzz
www.repairtw.com

i.1 Preface

Yaskawa manufactures products used as components in a wide variety of industrial systems and equipment. The selection and application of Yaskawa products remain the responsibility of the equipment manufacturer or end user. Yaskawa accepts no responsibility for the way its products are incorporated into the final system design. Under no circumstances should any Yaskawa product be incorporated into any product or design as the exclusive or sole safety control. Without exception, all controls should be designed to detect faults dynamically and fail safely under all circumstances. All systems or equipment designed to incorporate a product manufactured by Yaskawa must be supplied to the end user with appropriate warnings and instructions as to the safe use and operation of that part. Any warnings provided by Yaskawa must be promptly provided to the end user. Yaskawa offers an express warranty only as to the quality of its products in conforming to standards and specifications published in the Yaskawa manual. NO OTHER WARRANTY, EXPRESSED OR IMPLIED, IS OFFERED. Yaskawa assumes no liability for any personal injury, property damage, losses, or claims arising from misapplication of its products.

This manual is designed to ensure correct and suitable application of Variable A1000-Series Drives. Read this manual before attempting to install, operate, maintain, or inspect a drive and keep it in a safe, convenient location for future reference. Be sure you understand all precautions and safety information before attempting application.

◆ Applicable Documentation

The following manuals are available for A1000 series drives:

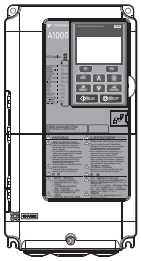	A1000 Series AC Drive Quick Start Guide
	This guide is packaged together with the product. It contains basic information required to install and wire the drive, in addition to an overview of fault diagnostics, maintenance, and parameter settings. It is meant to get the drive ready for a trial run with the application and for basic operation.
	A1000 Series AC Drive Technical Manual (this book)
	This manual is included on the CD-ROM packaged with the product (Yaskawa AC Drive Manuals, TOBCC71061621), and is also available for download on our documentation website, e-mechatronics.com. This manual provides detailed information on parameter settings, drive functions, and MEMOBUS/Modbus specifications. Use this manual to expand drive functionality and to take advantage of higher performance features.

上正科技有限公司
購買、維修 此手冊零組件
電話： 037-466333
Email: service@repairtw.com
Line id: @zzzz
www.repairtw.com

◆ Symbols

Note: Indicates a supplement or precaution that does not cause drive damage.

TERMS **Indicates a term or definition used in this manual.**

◆ Terms and Abbreviations

TERMS

- **Drive:** Yaskawa A1000 Series Drive
- **V/f:** V/f Control
- **V/f w/PG:** V/f Control with PG
- **OLV:** Open Loop Vector Control
- **CLV:** Closed Loop Vector Control
- **OLV/PM:** Open Loop Vector Control for PM
- **AOLV/PM:** Advanced Open Loop Vector Control for PM
- **CLV/PM:** Closed Loop Vector Control for PM
- **PM motor:** Permanent Magnet Synchronous motor (an abbreviation for IPM motor or SPM motor)
- **IPM motor:** Interior Permanent Magnet Motor (such as Yaskawa's SSR1 Series and SST4 Series motors)
- **SPM motor:** Surface mounted Permanent Magnet Motor (such as Yaskawa's SMRA Series motors)

i.2 General Safety

◆ Supplemental Safety Information

General Precautions
• The diagrams in this manual may be indicated without covers or safety shields to show details. Restore covers or shields before operating the drive and run the drive according to the instructions described in this manual. • Any illustrations, photographs, or examples used in this manual are provided as examples only and may not apply to all products to which this manual is applicable. • The products and specifications described in this manual or the content and presentation of the manual may be changed without notice to improve the product and/or the manual. • When ordering a new copy of the manual due to damage or loss, contact your Yaskawa representative or the nearest Yaskawa sales office and provide the manual number shown on the front cover. • If nameplate becomes worn or damaged, order a replacement from your Yaskawa representative or the nearest Yaskawa sales office.

⚠ WARNING
Read and understand this manual before installing, operating or servicing this drive. The drive must be installed according to this manual and local codes. The following conventions are used to indicate safety messages in this manual. Failure to heed these messages could result in serious or possibly even fatal injury or damage to the products or to related equipment and systems.

上正科技有限公司
購買、維修 此手冊零組件
電話： 037-416333
Email: service@repairtw.com
Line id: @zzzz
www.repairtw.com

⚠ DANGER
Indicates a hazardous situation, which, if not avoided, will result in death or serious injury.

⚠ WARNING
Indicates a hazardous situation, which, if not avoided, could result in death or serious injury.

WARNING! *will also be indicated by a bold key word embedded in the text followed by an italicized safety message.*

⚠ CAUTION
Indicates a hazardous situation, which, if not avoided, could result in minor or moderate injury.

CAUTION! *will also be indicated by a bold key word embedded in the text followed by an italicized safety message.*

NOTICE
Indicates a property damage message.

NOTICE: *will also be indicated by a bold key word embedded in the text followed by an italicized safety message.*

◆ Safety Messages

⚠ DANGER

Heed the safety messages in this manual.

Failure to comply will result in death or serious injury.

The operating company is responsible for any injuries or equipment damage resulting from failure to heed the warnings in this manual.

Electrical Shock Hazard

Do not connect or disconnect wiring while the power is on.

Failure to comply will result in death or serious injury.

Before servicing, disconnect all power to the equipment. The internal capacitor remains charged even after the power supply is turned off. After shutting off the power, wait for at least the amount of time specified on the drive before touching any components.

⚠ WARNING

Sudden Movement Hazard

System may start unexpectedly upon application of power, resulting in death or serious injury.

Clear all personnel from the drive, motor and machine area before applying power. Secure covers, couplings, shaft keys and machine loads before applying power to the drive.

When using DriveWorksEZ to create custom programming, the drive I/O terminal functions change from factory settings and the drive will not perform as outlined in this manual.

Unpredictable equipment operation may result in death or serious injury.

Take special note of custom I/O programming in the drive before attempting to operate equipment.

上正科技有限公司
購買、維修 此手冊零組件
電話： 037-466333
Email: [illegible]@repairtw.com
Line id: @2222
www.repairtw.com

Electrical Shock Hazard

Do not attempt to modify or alter the drive in any way not explained in this manual.

Failure to comply could result in death or serious injury.

Yaskawa is not responsible for any modification of the product made by the user. This product must not be modified.

Do not allow unqualified personnel to use equipment.

Failure to comply could result in death or serious injury.

Maintenance, inspection, and replacement of parts must be performed only by authorized personnel familiar with installation, adjustment and maintenance of AC drives.

Do not remove covers or touch circuit boards while the power is on.

Failure to comply could result in death or serious injury.

Fire Hazard

Do not use an improper voltage source.

Failure to comply could result in death or serious injury by fire.

Verify that the rated voltage of the drive matches the voltage of the incoming power supply before applying power.

Crush Hazard

Do not use this drive in lifting applications without installing external safety circuitry to prevent accidental dropping of the load.

The drive does not possess built-in load drop protection for lifting applications.

Failure to comply could result in death or serious injury from falling loads.

Install electrical and/or mechanical safety circuit mechanisms independent of drive circuitry.

⚠ CAUTION

Crush Hazard

Do not carry the drive by the front cover.

Failure to comply may result in minor or moderate injury from the main body of the drive falling.

NOTICE

Observe proper electrostatic discharge procedures (ESD) when handling the drive and circuit boards.

Failure to comply may result in ESD damage to the drive circuitry.

Do not perform a withstand voltage test on any part of the drive.

Failure to comply could result in damage to the sensitive devices within the drive.

Do not operate damaged equipment.

Failure to comply could result in further damage to the equipment.

Do not connect or operate any equipment with visible damage or missing parts.

Install adequate branch circuit short circuit protection per applicable codes.

Failure to comply could result in damage to the drive.

The drive is suitable for circuits capable of delivering not more than 100,000 RMS symmetrical Amperes, 240 Vac maximum (200 V Class) and 480 Vac maximum (400 V Class).

Do not expose the drive to halogen group disinfectants.

Failure to comply may cause damage to the electrical components in the drive.

Do not pack the drive in wooden materials that have been fumigated or sterilized.

Do not sterilize the entire package after the product is packed.

上証科技有限公司
購買、維修 此手冊零組件
電話： 037-466333
Email: service@repairtw.com
Line id: @zzzz
www.repairtw.com

◆ Application Notes

■ Selection

Installing a Reactor

An AC or DC reactor can be used for the following:

- to suppress harmonic current.
- to smooth peak current that results from capacitor switching.
- when the power supply is above 600 kVA.
- when the drive is running from a power supply system with thyristor converters.

Note: A DC reactor is built in to the drive models 2A0110 to 2A0415 and 4A0058 to 4A0675.

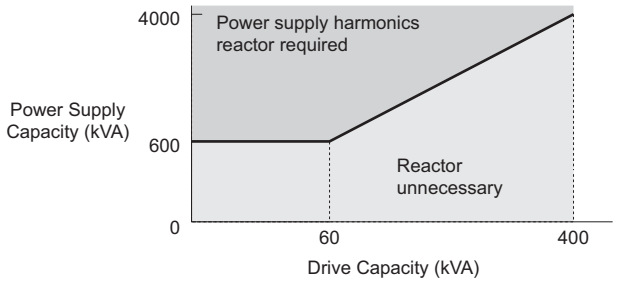

Figure i.1 Installing a Reactor

Drive Capacity

For specialized motors, make sure that the motor rated current is less than rated output current for the drive. When running more than one motor in parallel from a single drive, the capacity of the drive should be larger than 1.1 times of the total motor rated current.

Starting Torque

The overload rating for the drive determines the starting and accelerating characteristics of the motor. Expect lower torque than when running from line power. To get more starting torque, use a larger drive or increase both the motor and drive capacity.

Emergency Stop

When the drive faults out, the output is shut off. This, however, does not stop the motor immediately. Some type of mechanical brake may be needed if it is necessary to halt the motor faster than the Fast Stop function is able to.

Options

The B1, B2, +1, +2, and +3 terminals are used to connect optional devices. Connect only A1000-compatible devices.

Repetitive Starting/Stopping

Cranes (hoists), elevators, punching presses, and other such applications with frequent starts and stops often exceed 150% of their rated current values. Heat stress generated from repetitive high current can shorten the life span of the IGBTs.

Yaskawa recommends lowering the carrier frequency, particularly when audible noise is not a concern. The user can also choose to reduce the load, increase the acceleration and deceleration times, or switch to a larger drive. This will help keep peak current levels under 150%. Be sure to check the peak current levels when starting and stopping repeatedly during the initial test run, and make adjustments accordingly.

上正科技有限公司
購買、維修 此手冊零組件
電話： 037-466333
Email: service@repairtw.com
Line id: @zzzz
www.repairtw.com

For crane-type applications using an inching function in which the motor is quickly started and stopped, Yaskawa recommends the following to ensure motor torque levels:

- Select a large enough drive so that peak current levels remain below 150% of the drive rated current.
- The drive should be one frame size larger than the motor.

■ Installation

Enclosure Panels

Keep the drive in a clean environment by either selecting an area free of airborne dust, lint, and oil mist, or install the drive in an enclosure panel. Be sure to leave the required space between drives to provide for cooling, and that proper measures are taken so that the ambient temperature remains within allowable limits. Keep flammable materials away from the drive. If the drive must be used in an area where it is subjected to oil mist and excessive vibration, protective designs are available. Contact Yaskawa or your Yaskawa agent for details.

Installation Direction

The drive should be installed upright as specified in the manual. For more information on installation, *Refer to Mechanical Installation on page 40*.

■ Settings

Upper Limits

The drive is capable of running the motor up to 400 Hz. Due to the danger of accidentally of operating at high speed, be sure to set the upper limit for the frequency. The default setting for the maximum output frequency is 50 Hz.

DC Injection Braking

Motor overheat can result if there is too much current used during DC Injection Braking, or if the time for DC Injection Braking is too long.

Acceleration/Deceleration Times

Acceleration and deceleration times are affected by how much torque the motor generates, the load torque, and the inertia moment. Set a longer accel/decel time when Stall Prevention is enabled. The accel/decel times are lengthened for as long as the Stall Prevention function is operating. For faster acceleration and deceleration, install one of the braking options available or increase the capacity of the drive.

■ General Handling

Wiring Check

Never connect the power supply lines to output terminals U/T1, V/T2, or W/T3. Doing so will destroy the drive. Be sure to perform a final check of all sequence wiring and other connections before turning the power on. Make sure there are no short circuits on the control terminals (+V, AC, etc.), as this could damage the drive.

Selecting a Circuit Breaker or Leakage Circuit Breaker

Yaskawa recommends installing Earth Leakage Circuit Breaker (ELCB) to the power supply side. The ELCB should be designed for use with an AC drive (e.g. Type B according to IEC 60755).

Select a MCCB (Molded Case Circuit Breaker) or ELCB with a rated current that is 1.5 to 2 times higher than the rated current of the drive in order to avoid nuisance trips caused by harmonics in the drive input current. Also refer to ***Installing a Molded Case Circuit Breaker (MCCB) on page 381***.

Magnetic Contactor Installation

Use a magnetic contactor (MC) to ensure that power to the drive can be completely shut off when necessary. The MC should be wired so that it opens when a fault output terminal is triggered.

Avoid switching a magnetic contactor on the power supply side more frequently than once every 30 minutes. Frequent switching can cause damage to the drive.

Inspection and Maintenance

Capacitors in the drive take time to discharge even after the power has been shut off. After shutting off the power, wait for at least the amount of time specified on the drive before touching any components.

The heatsink can become quite hot during operation, and proper precautions should be taken to prevent burns. When replacing the cooling fan, shut off the power and wait at least 15 minutes to be sure that the heatsink has cooled down.

Even when the power has been shut off for a drive running a PM motor, voltage continues to be generated at the motor terminals while the motor coasts to stop. Take the precautions described below to prevent shock and injury:

上正科技有限公司
購買、維修 此手冊零組件
電話： 037-466333
Email: service@repairtw.com
Line id: @zzzz
www.repairtw.com

- In Applications where the machine can still rotate even though the drive has fully stopped a load switch for disconnecting motor and drive should be installed to the output side of the drive.
- Do not allow an external force to rotate the motor beyond the maximum allowable speed, also when the drive has been shut off.
- Wait for at least the time specified on the warning label after opening the load switch on the output side before inspecting the drive or performing any maintenance.
- Do not open and close the load switch while the motor is running, as this can damage the drive.
- If the motor is coasting, make sure the power to the drive is turned on and the drive output has completely stopped before closing the load switch.

Wiring

All wire ends should use ring terminals for UL/cUL compliance. Use only the tools recommended by the terminal manufacturer for crimping.

Transporting the Drive

Never steam clean the drive.

During transport, keep the drive from coming into contact with salts, fluorine, bromine, phthalate ester, and other such harmful chemicals.

◆ Notes on Motor Operation

■ Using a Standard Motor

Low Speed Range

The cooling fan of a standard motor is usually designed to sufficiently cool the motor at the rated speed. As the self-cooling capability of such a motor reduces with the speed, applying full torque at low speed will possibly damage the motor. To prevent motor damage from overheat, reduce the load torque as the motor slows.

Insulation Tolerance

Consider voltage tolerance levels and insulation in applications with an input voltage of over 440 V or particularly long wiring distances. Contact Yaskawa or your Yaskawa agent for consultation.

High Speed Operation

Problems may occur with the motor bearings and dynamic balance of the machine when operating a motor beyond its rated speed. Contact the motor or machine manufacturer.

Torque Characteristics

Torque characteristics differ compared to operating the motor directly from line power. The user should have a full understanding of the load torque characteristics for the application.

Vibration and Shock

A1000 lets the user choose between high carrier PWM control and low carrier PWM. Selecting high carrier PWM can help reduce motor oscillation.

Take particular caution when using a variable speed drive for an application that is conventionally run from line power at a constant speed. If resonance occurs shock-absorbing rubber should be installed around the base of the motor and the Jump frequency selection should be enabled to prevent continuous operation in the resonant frequency range.

Audible Noise

Noise created during run varies by the carrier frequency setting. When using a high carrier frequency, audible noise from the motor is comparable to the motor noise generated when running from line power. Operating above the rated r/min, however, can create unpleasant motor noise.

■ Using a Synchronous Motor

- Contact Yaskawa or your Yaskawa agent if you plan to use any other synchronous motor not endorsed by Yaskawa.
- A single drive is not capable of running multiple synchronous motors at the same time. Use a standard induction motor for such setups.
- At start, a synchronous motor may rotate slightly in the opposite direction of the Run command depending on parameter settings and rotor position.
- The amount of starting torque that can be generated differs by each control mode and by the type of motor being used. Set up the motor with the drive after verifying the starting torque, allowable load characteristics, impact load tolerance, and speed control range.

  Contact Yaskawa or your Yaskawa agent if you plan to use a motor that does not fall within these specifications.
- In Open Loop Vector Control for PM motors, braking torque is less than 125% when running between 20% to 100% speed, even with a braking resistor. Braking torque drops to less than half when running at less than 20% speed.
- In Open Loop Vector Control for PM motors, the allowable load inertia moment is approximately 50 times higher than the motor inertia moment or less. Contact Yaskawa or your Yaskawa agent concerning applications with a larger inertia moment.
- When using a holding brake in Open Loop Vector Control for PM motors, release the brake prior to starting the motor. Failure to set the proper timing can result in speed loss. Not for use with conveyor, transport, or hoist type applications.
- To restart a coasting motor rotating at over 200 Hz while in the V/f control mode, use the Short Circuit Braking function to first bring the motor to a stop. Short Circuit Braking requires a special braking resistor. Contact Yaskawa or your Yaskawa agent for details.

  Speed Search can be used to restart a coasting motor rotating slower than 200 Hz. If the motor cable is relatively long, however, the motor should instead be stopped using Short Circuit Braking, which forces the motor to stop by creating a short-circuit in the motor windings.

上正科技有限公司
購買、維修 此手冊零組件
電話： 037-466355
Email: service@repairtw.com
Line id: @zzzz
www.repairtw.com

◆ Applications with Specialized Motors

■ Applications with Specialized Motors

Multi-Pole Motor

Because the rated current will differ from a standard motor, be sure to check the maximum current when selecting a drive. Always stop the motor before switching between the number of motor poles. If a regen overvoltage fault occurs or if overcurrent protection is triggered, the motor will coast to stop.

Submersible Motor

Because motor rated current is greater than a standard motor, select the drive capacity accordingly. Be sure to use a large enough motor cable to avoid decreasing the maximum torque level on account of voltage drop caused by a long motor cable.

Explosion-Proof Motor

Both the motor and drive need to be tested together to be certified as explosion-proof. The drive is not designed for explosion proof areas.

Furthermore, if an encoder is attached to an explosion-proof motor make sure the encoder is explosion-proof too. Use an insulating signal converter for connecting the encoder signal lines to the drives speed feedback option card.

Geared Motor

To avoid gear damage when operating at low speeds or very high speeds, make sure that both the gear and lubricant are rated for the desired speed range. Consult with the manufacturer for applications that require operation outside the rated speed range of the motor or gear box.

Single-Phase Motor

Variable speed drives are not designed for operation with single phase motors. Using capacitors to start the motor causes excessive current to flow and can damage drive components. A split-phase start or a repulsion start can end up burning out the starter coils because the internal centrifugal switch is not activated. A1000 is for use with three-phase motors only.

Motor with Brake

Caution should be taken when using a drive to operate a motor with a built-in holding brake. If the brake is connected to the output side of the drive, it may not release at start due to low voltage levels. A separate power supply should be installed for the motor brake. Motors with a built-in brake tend to generate a fair amount of noise when running at low speeds.

上誌科技有限公司
購買、維修 此手冊零組件
電話： 037-466333
Email: service@repairtw.com
Line Id: @2222
www.repairtw.com

■ Notes on Power Transmission Parts (belts, chains, gear boxes, ...)

Installing a drive in a machine that was directly connected to the power supply allows to adjust the machine speed. Continuous operation above or below the rated speed can wear on lubrication material in gear boxes and other power transmission parts. In order to avoid machine damage make sure lubrication is sufficient within the whole speed range. Note that operation above the rated speed can increase the noise generated by the machine.

◆ Drive Label Warnings

Always heed the warning information listed in ***Figure i.2*** in the position shown in ***Figure i.3***.

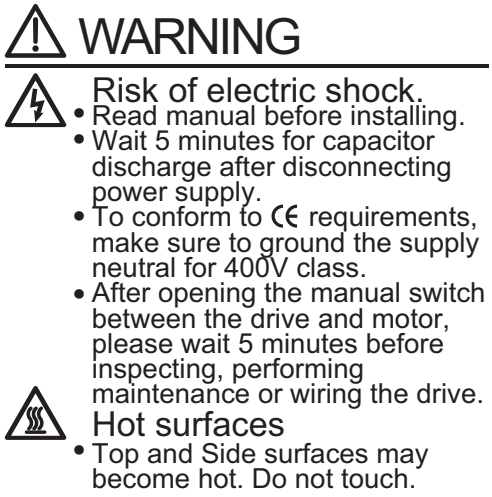

Figure i.2 Warning Information

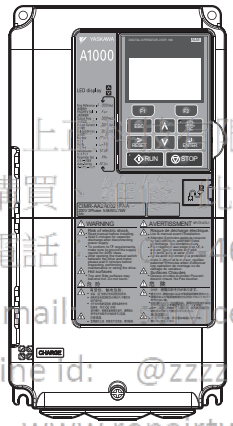

購買 維修 手冊零組件
www.repairtw.com

Figure i.3 Warning Information Position

◆ Warranty Information

■ Restrictions

A1000 was not designed or manufactured for use in devices or systems that may directly affect or threaten human lives or health.

Customers who intend to use the product described in this manual for devices or systems relating to transportation, health care, space aviation, atomic power, electric power, or in underwater applications must first contact their Yaskawa representatives or the nearest Yaskawa sales office.

This product has been manufactured under strict quality-control guidelines. However, if this product is to be installed in any location where failure of this product could involve or result in a life-and-death situation or loss of human life or in a facility where failure may cause a serious accident or physical injury, safety devices must be installed to minimize the likelihood of any accident.

1

Receiving

This chapter explains how to inspect the drive upon receipt, and gives and overview of the different enclosure types and components.

1.1 SECTION SAFETY 26
1.2 GENERAL DESCRIPTION 27
1.3 MODEL NUMBER AND NAMEPLATE CHECK 29
1.4 DRIVE MODELS AND ENCLOSURE TYPES 31
1.5 COMPONENT NAMES 32

上正科技有限公司
購買、維修 此手冊零組件
電話： 037-466333
Email: service@repairtw.com
Line id: @zzzz
www.repairtw.com

1.1 Section Safety

⚠ CAUTION

Do not carry the drive by the front cover or the terminal cover.

Failure to comply may cause the main body of the drive to fall, resulting in minor or moderate injury.

NOTICE

Observe proper electrostatic discharge procedures (ESD) when handling the drive and circuit boards.

Failure to comply may result in ESD damage to the drive circuitry.

A motor connected to a PWM drive may operate at a higher temperature than a utility-fed motor and the operating speed range may reduce motor cooling capacity.

Ensure that the motor is suitable for drive duty and/or the motor service factor is adequate to accommodate the additional heating with the intended operating conditions.

上正科技有限公司
購買、維修 此手冊零組件
電話： 037-466333
Email: service@repairtw.com
Line id: @zzzz
www.repairtw.com

1.2 General Description

◆ A1000 Model Selection

Table 1.1 gives a reference for drive selection depending on the motor power and Normal or Heavy Duty rating.

Note: The models and capacities in shown here are based on standard settings and operation conditions. Derating is required for higher carrier frequencies and higher ambient temperatures.

Table 1.1 A1000 Models

Motor Power (kW)	3-Phase 200 V Class				3-Phase 400 V Class			
	Heavy Duty Rating		Normal Duty Rating		Heavy Duty Rating		Normal Duty Rating	
	Model CIMR-A□	Rated Output Current (A)	Model CIMR-A□	Rated Output Current (A) <3>	Model CIMR-A□	Rated Output Current (A)	Model CIMR-A□	Rated Output Current (A) <3>
0.55	2A0004	3.2 <1>	–	–	4A0002	1.8	–	–
0.75	2A0006	5 <1>	2A0004	3.5	4A0004	3.4	4A0002	2.1
1.1	–	–	2A0006	6	–	–	–	–
1.5	2A0010	8 <1>	–	–	4A0005	4.8	4A0004	4.1
2.2	2A0012	11 <1>	2A0010	9.6	4A0007	5.5	4A0005	5.4
3.0	–	–	2A0012	12	4A0009	7.2	4A0007	6.9
4.0	2A0021	17.5 <1>	–	–	4A0011	9.2	4A0009	8.8
5.5	2A0030	25 <1>	2A0021	21	4A0018	14.8	4A0011	11.1
7.5	2A0040	33 <1>	2A0030	30	4A0023	18	4A0018	17.5
11	2A0056	47 <1>	2A0040	40	4A0031	24 <1>	4A0023	23
15	2A0069	60 <1>	2A0056	56	4A0038	31 <1>	4A0031	31
18.5	2A0081	75 <1>	2A0069	69	4A0044	39 <1>	4A0038	38
22	2A0110	85 <1>	2A0081	81	4A0058	45 <1>	4A0044	44
30	2A0138	115 <1>	2A0110	110	4A0072	60 <1>	4A0058	58
37	2A0169	145 <1>	2A0138	138	4A0088	75 <1>	4A0072	72
45	2A0211	180 <2>	2A0169	169	4A0103	91 <1>	4A0088	88
55	2A0250	215 <2>	2A0211	211	4A0139	112 <2>	4A0103	103
75	2A0312	283 <2>	2A0250	250	4A0165	150 <2>	4A0139	139
90	2A0360	346 <2>	2A0312	312	4A0208	180 <2>	4A0165	165
110	2A0415	415 <2>	2A0360	360	4A0250	216 <2>	4A0208	208
	–	–	2A0415	415	–	–	–	–
132	–	–	–	–	4A0296	260 <2>	4A0250	250
160	–	–	–	–	4A0362	304 <2>	4A0296	296
185	–	–	–	–	4A0414	370 <2>	4A0362	362
220	–	–	–	–	4A0515	450 <3>	4A0414	414
250	–	–	–	–	–	–	4A0515	515
315	–	–	–	–	4A0675	605 <3>	–	–
355	–	–	–	–	–	–	4A0675	675

<1> These values assume the carrier frequency is not set higher than 8 kHz.
<2> These values assume the carrier frequency is not set higher than 5 kHz.
<3> These values assume the carrier frequency is set to 2 kHz.

Note: Current derating is required when setting the carrier frequency higher. *Refer to Carrier Frequency Derating on page 394* for details.

上正科技有限公司
購買 維修 批手冊零組件
電話： 037-466333
Email: service@repairtw.com
Line id: @zzzz
www.repairtw.com

◆ Control Mode Selection

Table 1.2 gives an overview of the A1000 control modes and their various features.

Table 1.2 Control Modes and their Features

Motor Type		Induction Motors				Permanent Magnet Motors			Comments
Control Mode		V/f	V/f w/PG	OLV	CLV	OLV/PM	AOLV/PM	CLV/PM	–
Parameter Setting		A1-02 = 0	A1-02 = 1	A1-02 = 2	A1-02 = 3	A1-02 = 5	A1-02 = 6	A1-02 = 7	Default Setting is Open Loop Vector Control.
Basic Description		V/f control	V/f control using motor speed feedback	Open Loop Vector control	Closed Loop Vector control	Open Loop Vector control for PM motors	Open Loop Vector control for IPM motors	Closed Loop Vector control for PM motors	–
Type of Applications	Motor Type	IM	IM	IM	IM	PM	IPM	PM	–
	Multi Motor	YES	N/A	N/A	N/A	N/A	N/A	N/A	–
	Motor data unknown	YES	N/A	N/A	N/A	N/A	N/A	N/A	–
	High Speed Accuracy	N/A	YES	YES	YES	YES	YES	YES	–
	High Speed Response	N/A	N/A	YES	YES	N/A	YES	YES	–
	Zero Speed Control	N/A	N/A	N/A	YES	N/A	YES	YES	–
	Torque Control Operation	N/A	N/A	N/A	YES	N/A	YES	YES	–
	Torque Limit Operation	N/A	N/A	YES	YES	N/A	N/A	YES	–
PG Option Card		N/A	PG-B3 or PG-X3	N/A	PG-B3 or PG-X3	N/A	N/A	PG-X3	–
Control Characteristics	Speed Control Range	1:40	1:40	1:200	1:1500	1:20	1:100	1:1500	May fluctuate with characteristics and motor temperature.
	Speed Accuracy	±2 to 3%	±0.03%	±0.2%	±0.02%	±0.2%	±0.2%	±0.02%	Speed deviation when operating at constant speed. May fluctuate with characteristics and motor temperature.
	Speed Response	3 Hz (approx.)	3 Hz (approx.)	10 Hz	50 Hz	10 Hz	10 Hz	50 Hz	Max. frequency of a speed reference signal that the drive can follow. May fluctuate with characteristics and motor temperature.
	Starting Torque	150% at 3 Hz	150% at 3 Hz	200% at 0.3 Hz	200% at 0 r/min	100% at 5% speed	200% at 0 r/min	200% at 0 r/min	May fluctuate with characteristics and motor temperature. Performance may differ by capacity.
Application-Specific	Auto-Tuning	• Energy Saving Tuning • Line to line resistance	• Energy Saving Tuning • Line to line resistance	• Rotational • Stationary • Line to line resistance	• Rotational • Stationary • Line to line resistance • ASR • Inertia	• Stationary • Line to line resistance	• Stationary • Line to line resistance	• Stationary • Line to line resistance • ASR • Inertia • Encoder Offset	Automatically adjusts parameter settings that concern electrical characteristics of the motor.
	Torque Limit	N/A	N/A	YES	YES	N/A	YES	YES	Sets the maximum torque for the motor to protect the load and connected machinery.
	Torque Control	N/A	N/A	N/A	YES	N/A	N/A	YES	Allows direct control of motor torque for tension control and other such applications.
	Droop Function	N/A	N/A	N/A	YES	N/A	N/A	YES	–
	Zero Servo Control	N/A	N/A	N/A	YES	N/A	N/A	YES	Locks the rotor position.
	Speed Search	YES	YES	YES	–	YES	YES	YES	Bi-directional speed detection of a coasting motor to restart it without stopping.
	Energy-Saving Control	YES	YES	YES	YES	N/A	YES (IPM motors only)	YES (IPM motors only)	Saves energy by always operating the motor at its maximum efficiency.
	High Slip Braking	YES	YES	N/A	N/A	N/A	N/A	N/A	Increases motor loss to allow for faster deceleration than normal without the use of a braking resistor. The effectiveness may vary based on motor characteristics.
	Feed Forward Control	N/A	N/A	N/A	YES	N/A	N/A	YES	Improves speed accuracy when the load changes by compensating effects of the system inertia.
	Kinetic Energy Buffering	YES	YES	YES	YES	YES	YES	YES	Decelerates the drive to allow it to ride through a momentary power loss and continue operation.
	Overexcitation Deceleration	YES	YES	YES	YES	N/A	N/A	N/A	Provides fast deceleration without using a braking resistor.
	Inertia Tuning, ASR Tuning	N/A	N/A	N/A	YES	N/A	N/A	YES	Provides automatic Speed Control and Feed Forward function tuning.
	Overvoltage Suppression	YES	YES	YES	YES	YES	YES	YES	Prevents overvoltage by increasing speed during regeneration. Never use this function with hoist or crane applications.
	High Frequency Injection	N/A	N/A	N/A	N/A	N/A	YES	N/A	Greatly increases the speed control range of an IPM motor.

上正科技有限公司
購買、維修 此手冊零組件
電話： 037-466333
Email: service@repairtw.com
Line id: @zzzz
www.repairtw.com

1.3 Model Number and Nameplate Check

Please perform the following tasks after receiving the drive:

- Inspect the drive for damage.
  If the drive appears damaged upon receipt, contact the shipper immediately.
- Verify receipt of the correct model by checking the information on the nameplate.
- If you have received the wrong model or the drive does not function properly, contact your supplier.

◆ Nameplate

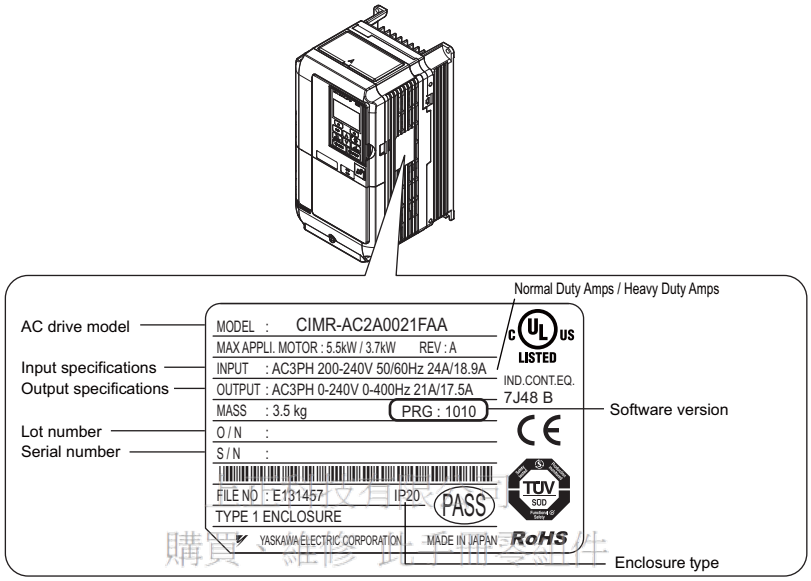

Figure 1.1 Nameplate Information

購買、維修 此手冊委託
電話：
Email service@repairtw.com
Line id: @zzz
http://www.repairtw.com

CIMR - A C 2 A 0004 F A A

- CIMR: Drive
- A: A1000 Series
- C: Region Code

No.	Region Code
U	USA
A	Japan
C	Europe

- 2: Voltage Class

No.	Voltage Class
2	3-phase, 200-240 Vac
4	3-phase, 380-480 Vac

- A: Customized Specifications

No.	Customized Specifications
A	Standard model

- 0004: Drive Capacity
- F: Enclosure Type

No.	Enclosure Type
A	IP00
F	NEMA Type1

- A: Environmental Specification <1>

No.	Environmental Specification <1>
A	Standard

- A: Design Revision Order

■ Three-Phase 200 V

Normal Duty		
No.	Max. Motor Capacity kW	Rated Output Current A
0004	0.75	3.5
0006	1.1	6.0
0010	2.2	9.6
0012	3.0	12
0021	5.5	21
0030	7.5	30
0040	11	40
0056	15	56
0069	18.5	69
0081	22	81
0110	30	110
0138	37	138
0169	45	169
0211	55	211
0250	75	250
0312	90	312
0360	110	360
0415	110	415

Heavy Duty		
No.	Max. Motor Capacity kW	Rated Output Current A
0004	0.55	3.2
0006	1.1	5
0010	1.5	8
0012	2.2	11
0021	4.0	17.5
0030	5.5	25
0040	7.5	33
0056	11	47
0069	15	60
0081	18.5	75
0110	22	85
0138	30	115
0169	37	145
0211	45	180
0250	55	215
0312	75	283
0360	90	346
0415	110	415

■ Three-Phase 400 V

Normal Duty		
No.	Max. Motor Capacity kW	Rated Output Current A
0002	0.75	2.1
0004	1.5	4.1
0005	2.2	5.4
0007	3.0	6.9
0009	4.0	8.8
0011	5.5	11.1
0018	7.5	17.5
0023	11	23
0031	15	31
0038	18.5	38
0044	22	44
0058	30	58
0072	37	72
0088	45	88
0103	55	103
0139	75	139
0165	90	165
0208	110	208
0250	132	250
0296	160	296
0362	185	362
0414	220	414
0515	250	515
0675	355	675

Heavy Duty		
No.	Max. Motor Capacity kW	Rated Output Current A
0002	0.55	1.8
0004	1.1	3.4
0005	1.5	4.8
0007	2.2	5.5
0009	3.0	7.2
0011	4.0	9.2
0018	5.5	14.8
0023	7.5	18
0031	11	24
0038	15	31
0044	18.5	39
0058	22	45
0072	30	60
0088	37	75
0103	45	91
0139	55	112
0165	75	150
0208	90	180
0250	110	216
0296	132	260
0362	160	304
0414	185	370
0515	220	450
0675	315	605

昇正科技有限公司
購買、維修 此手冊零組件
電話： 037-466333
Email: service@repairtw.com
Line id: @zzzz
www.repairtw.com

<1> Contact Yaskawa for information about using drives in environments other than specified in this manual.

Note: *Refer to* ***Drive Models and Enclosure Types on page 31*** for differences regarding enclosure protection types and component descriptions.

1.4 Drive Models and Enclosure Types

Two types of enclosures are offered for A1000 drives.

- IP00 enclosure models are designed for installation in an enclosure panel that serves to protect personnel from injury caused by accidentally touching live parts.
- IP20/NEMA Type 1 enclosure models mount to an indoor wall or in an enclosure panel.

Table 1.3 describes drive enclosures and models.

Table 1.3 Drive Models and Enclosure Types

Voltage Class	Enclosure Type	
	IP20/NEMA Type 1 Enclosure CIMR-A☐ <1>	IP00 Enclosure CIMR-A☐
Three-Phase 200 V Class	2A0004F	–
	2A0006F	–
	2A0010F	–
	2A0012F	–
	2A0021F	–
	2A0030F	–
	2A0040F	–
	2A0056F	–
	2A0069F	–
	2A0081F	–
	–	2A0110A
	–	2A0138A
	–	2A0169A
	–	2A0211A
	–	2A0250A
	–	2A0312A
	–	2A0360A
	–	2A0415A
Three-Phase 400 V Class	4A0002F	–
	4A0004F	–
	4A0005F	–
	4A0007F	–
	4A0009F	–
	4A0011F	–
	4A0018F	–
	4A0023F	–
	4A0031F	–
	4A0038F	–
	4A0044F	–
	–	4A0058A
	–	4A0072A
	–	4A0088A
	–	4A0103A
	–	4A0139A
	–	4A0165A
	–	4A0208A
	–	4A0250A
	–	4A0296A
	–	4A0362A
	–	4A0414A
	–	4A0515A
	–	4A0675A

上正科技有限公司
購買維修 此手冊零組件
電話 037-466333
Email service@repairtw.com
Line ID @zzzz
www.repairtw.com

<1> Removing the top protective cover from a IP20/NEMA Type 1 enclosure drive voids NEMA Type 1 protection but still keeps IP20 conformity.

1.5 Component Names

This section gives and overview of the drive components described in this manual.

Note: **1.** See *Using the Digital Operator on page 87* for a description of the operator keypad.
2. The drive may have no cooling fans or only one cooling fan depending on the model.

◆ IP20/NEMA Type 1 Enclosure

■ Three-Phase AC200 V CIMR-A□2A0004F to 0081F
Three-Phase AC400 V CIMR-A□4A0002F to 0044F

Table 1.4 Exploded View of IP20/NEMA Type 1 Enclosure Components (CIMR-A□2A0030F)

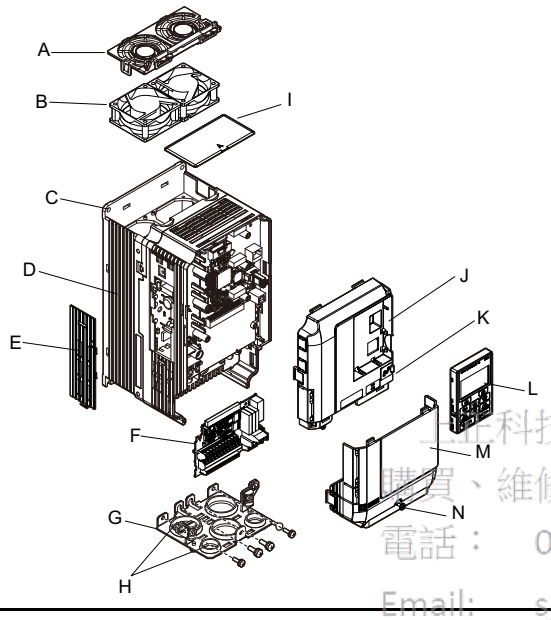

A - Fan cover <1>
B - Cooling fan <1>
C - Mounting hole
D - Heatsink
E - Optional 24 V DC power supply connector cover
F - Terminal board
G - Bottom cover
H -Rubber bushing
I - Top protective cover
J - Front cover
K - USB port (type-B)
L - Digital Operator
M - Terminal cover
N - Terminal cover screw

士林科技有限公司
購買、維修 此手冊零組件
電話： 037-466333
Email: service@repairtw.com
Line Id: @2222
www.repairtw.com

<1> The following drive models have a single cooling fan: CIMR-A□2A0021F, CIMR-A□4A0007F through 0011F. Drives CIMR-A□2A0004F through 0012F and CIMR-A□4A0002F through 0005F do not have a cooling fan or a cooling fan cover.

◆ IP00 Enclosure

■ Three-Phase AC200 V CIMR-A□2A0110A, 0138A
Three-Phase AC400 V CIMR-A□4A0058A to 0103A

Table 1.5 Exploded View of IP00 Enclosure Components (CIMR-A□2A0110A)

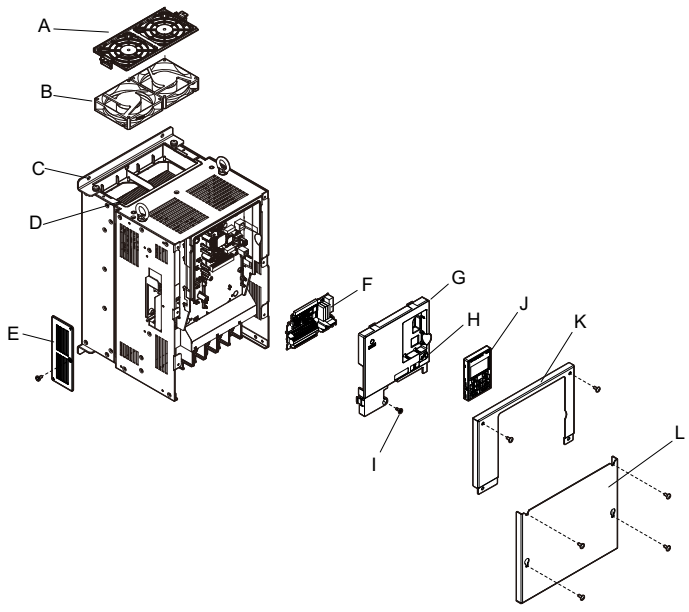

A - Fan cover
B - Cooling fan
C - Mounting hole
D - Heatsink
E - Optional 24 V DC power supply connector cover
F - Terminal board
G - Front cover
H - USB port (type-B)
I - Front cover screw
J - Digital operator
K - Drive Cover
L - Terminal cover

■ Three-Phase AC200 V CIMR-A□2A0169A to 0312A
Three-Phase AC400 V CIMR-A□4A0139A to 0208A

Table 1.6 Exploded view of IP00 Enclosure Type Components (CIMR-A□4A0165A)

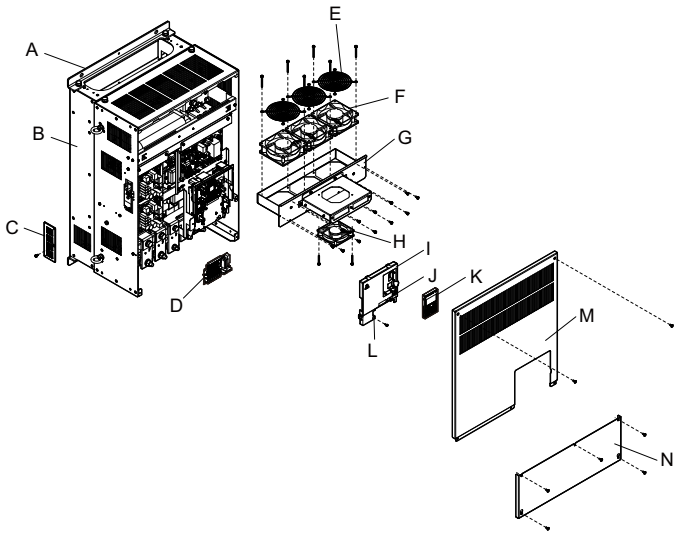

A - Mounting hole
B - Heatsink
C - Optional 24 V DC power supply connector cover
D - Terminal board
E - Fan guard
F - Cooling fan
G - Fan unit
H - Front cover
I - USB port (type-B)
J - Digital operator
K - Front cover screw
L - Drive cover
M - Terminal cover

■ Three-Phase AC200 V CIMR-A□2A0360A, 0415A
Three-Phase AC400 V CIMR-A□4A0250A to 0362A

Table 1.7 Exploded view of IP00 Enclosure Type Components (CIMR-A□4A0362A)

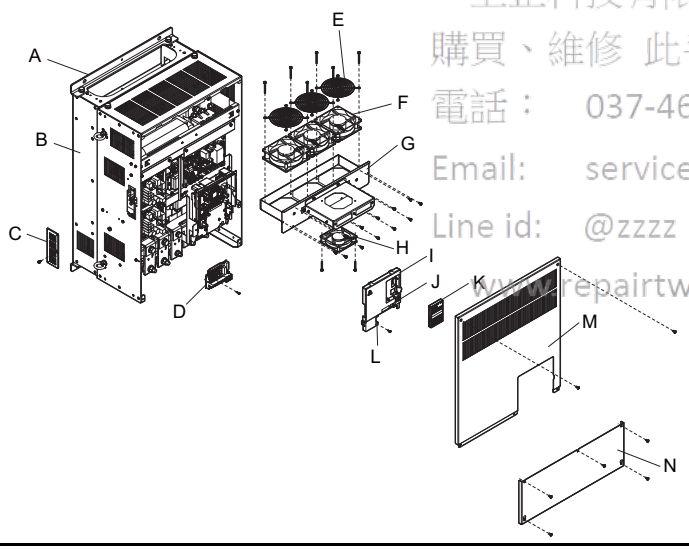

上正科技有限公司
購買、維修 此手冊零組件
電話： 037-466833
Email: service@repairtw.com
Line id: @zzzz
www.repairtw.com

A - Mounting hole
B - Heatsink
C - Optional 24 V DC power supply connector cover
D - Terminal board
E - Fan guard
F - Cooling fan
G - Fan unit
H - Circulation fan <1>
I - Front cover
J - USB port (type-B)
K - Digital operator
L - Front cover screw
M - Drive cover
N - Terminal cover

<1> The following drive models come with a built-in circulation fan.
CIMR-A□2A0360, 2A0415
CIMR-A□4A0362

■ Three-Phase AC400 V CIMR-A□4A0414A

Table 1.8 Exploded view of IP00 Enclosure Type Components (CIMR-A□4A0414A)

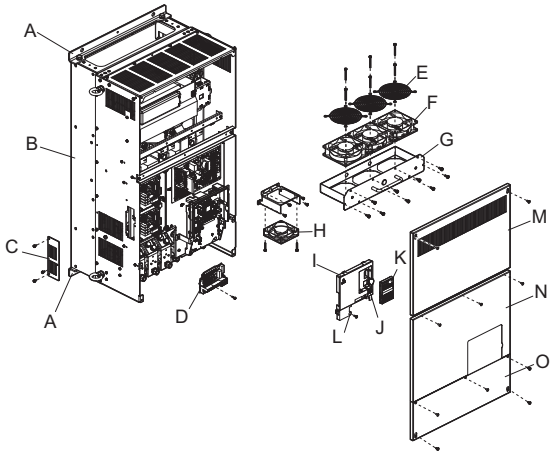

A - Mounting hole
B - Heatsink
C - Optional 24 V DC power supply connector cover
D - Terminal board
E - Fan guard
F - Cooling fan
G - Fan unit
H - Circulation fan
I - Front cover
J - USB port (type-B)
K - Digital operator
L - Front cover screw
M - Drive cover 1
N - Drive cover 2
O - Terminal cover

■ Three-Phase AC400 V CIMR-A□4A0515A, 0675A

Table 1.9 Exploded view of IP00 Enclosure Type Components (CIMR-A□4A0515A, 0675A)

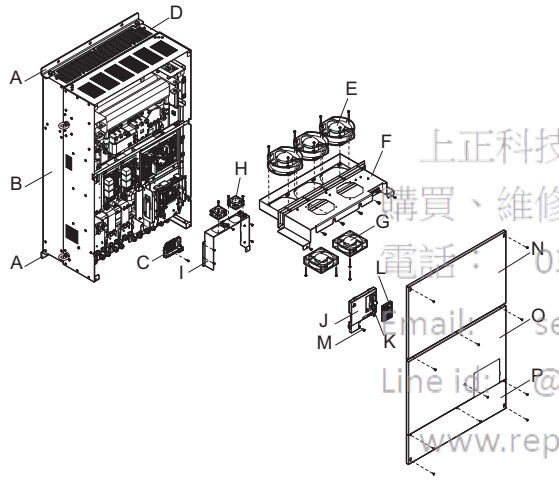

A - Mounting hole
B - Heatsink
C - Terminal board
D - Fan guard
E - Cooling fan
F - Fan unit
G - Circulation fan
H - Circuitboard cooling fan
I - Circuitboard cooling fan unit case
J - Front cover
K - USB port (type-B)
L - Digital operator
M - Front cover screw
N - Drive cover 1
O - Drive cover 2
P - Terminal cover

上正科技有限公司
購買、維修 此手冊零組件
電話： 037-466333
Email: service@repairtw.com
Line id: @zzzz
www.repairtw.com

◆ Front Views

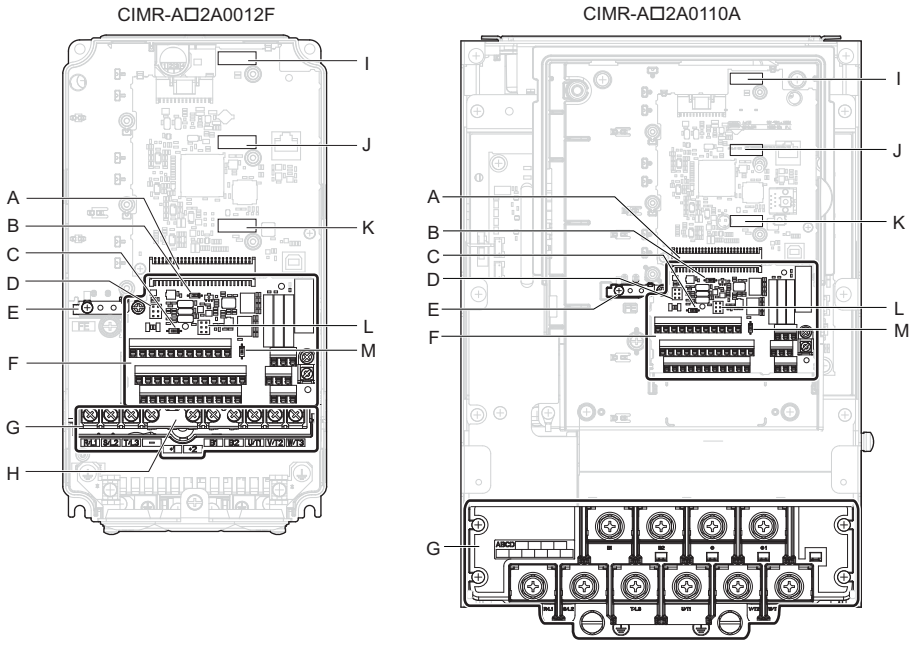

A – Terminal board connector

B – DIP switch S1 (*Refer to Terminal A2 Input Signal Selection on page 79*)

C – DIP switch S2 (*Refer to MEMOBUS/ Modbus Termination on page 80*)

D – Jumper S3 (*Refer to Sinking/Sourcing Mode Selection for Safe Disable Inputs on page 77*)

E – Ground terminal

F – Terminal board (*Refer to Control Circuit Wiring on page 72*)

G – Main circuit terminal (*Refer to Wiring the Main Circuit Terminal on page 71*)

H – Protecting cover to prevent miswiring

I – Option card connector (CN5-C)

J – Option card connector (CN5-B)

K – Option card connector (CN5-A)

L – Jumper S5 (*Refer to Terminal AM/FM Signal Selection on page 79*)

M – DIP Switch S4 (*Refer to Terminal A3 Analog/PTC Input Selection on page 79*)

上正科技有限公司
購買、維修 此手冊零組件
電話： 037-466333
Email: service@repartw.com
Line id: @zzzz
www.repartw.com

Figure 1.2 Front View of Drives

上正科技有限公司
購買、維修 此手冊零組件
電話： 037-466333
Email: service@repairtw.com
Line id: @zzzz
www.repairtw.com

2

Mechanical Installation

This chapter explains how to properly mount and install the drive.

2.1 SECTION SAFETY 38
2.2 MECHANICAL INSTALLATION 40

上正科技有限公司
購買、維修 此手冊零組件
電話： 037-466333
Email: service@repairtw.com
Line id: @zzzz
www.repairtw.com

2.1 Section Safety

⚠ WARNING

Fire Hazard

Provide sufficient cooling when installing the drive inside an enclosed panel or cabinet.

Failure to comply could result in overheating and fire.

When multiple drives are placed inside the same enclosure panel, install proper cooling to ensure air entering the enclosure does not exceed 40°C.

⚠ CAUTION

Crush Hazard

Do not carry the drive by the front cover or the terminal cover.

Failure to comply may result in minor or moderate injury from the main body of the drive falling.

NOTICE

Equipment Hazard

Prevent foreign matter such as metal shavings or wire clippings from falling into the drive during drive installation and project construction.

Failure to comply could result in damage to the drive.

Place a temporary cover over the top during installation. Be sure to remove the temporary cover before start-up, as the cover will reduce ventilation and cause the unit to overheat.

Observe proper electrostatic discharge (ESD) procedures when handling the drive.

Failure to comply could result in ESD damage to the drive circuitry.

Operating the motor in the low-speed range diminishes the cooling effects, increases motor temperature, and may lead to motor damage by overheating.

Reduce the motor torque in the low-speed range whenever using a standard blower cooled motor. If 100% torque is required continuously at low speed, consider using a special drive or vector-control motor. Select a motor that is compatible with the required load torque and operating speed range.

The speed range for continuous operation differs according to the lubrication method and motor manufacturer.

If the motor is to be operated at a speed higher than the rated speed, consult with the manufacturer.

Continuously operating an oil-lubricated motor in the low-speed range may result in burning.

When the input voltage is 440 V or higher or the wiring distance is greater than 100 meters, pay special attention to the motor insulation voltage or use a drive-rated motor with reinforced insulation.

Failure to comply could lead to motor winding failure.

Motor vibration may increase when operating a machine in variable-speed mode, if that machine previously operated at a constant speed.

Install vibration-proof rubber on the motor base or use the frequency jump function to skip a frequency resonating the machine.

The motor may require more acceleration torque with drive operation than with a commercial power supply.

Set a proper V/f pattern by checking the load torque characteristics of the machine to be used with the motor.

The rated input current of submersible motors is higher than the rated input current of standard motors.

Select an appropriate drive according to its rated output current. When the distance between the motor and drive is long, use a cable thick enough to connect the motor to the drive to prevent motor torque reduction.

上正科技有限公司
購買、維修 此手冊零組件
電話: 037-466935
Email: service@repairtw.com
Line id: @zzzz
www.repairtw.com

NOTICE

The current rating differs for a motor with variable pole pitches differs from a standard motor.

Check the maximum current of the motor before selecting the drive capacity. Only switch motor poles when the motor is stopped. Switching between motor during run will trigger overcurrent protection circuitry or result in overvoltage from regeneration, and the motor will simply coast to stop.

When using an explosion-proof motor, it must be subject to an explosion-proof test in conjunction with the drive.

This is also applicable when an existing explosion-proof motor is to be operated with the drive. Since the drive itself is not explosion-proof, always install it in a safe place.

Never lift the drive up while the cover is removed.

This can damage the terminal board and other components.

上正科技有限公司
購買、維修 此手冊零組件
電話： 037-466333
Email: service@repairtw.com
Line id: @zzzz
www.repairtw.com

2.2 Mechanical Installation

This section outlines specifications, procedures, and the environment for proper mechanical installation of the drive.

◆ Installation Environment

To help prolong the optimum performance life of the drive, install the drive in an environmental matching the specifications below.

Table 2.1 Installation Environment

Environment	Conditions
Installation Area	Indoors
Ambient Temperature	-10°C to +40°C (IP20/NEMA Type 1 enclosure) -10°C to +50°C (IP00 enclosure) Drive reliability improves in environments without wide temperature fluctuations. When using the drive in an enclosure panel, install a cooling fan or air conditioner in the area to ensure that the air temperature inside the enclosure does not exceed the specified levels. Do not allow ice to develop on the drive.
Humidity	95% RH or less and free of condensation
Storage Temperature	-20 to +60°C
Surrounding Area	Install the drive in an area free from: • oil mist and dust • metal shavings, oil, water or other foreign materials • radioactive materials • combustible materials (e.g., wood) • harmful gases and liquids • excessive vibration • chlorides • direct sunlight
Altitude	1000 m, up to 3000 m with derating (for details, refer to *Altitude Derating on page 396*)
Vibration	10 to 20 Hz at 9.8 m/s² 20 to 55 Hz at 5.9 m/s² (Models CIMR-A☐2A0004 to 2A0211 and 4A0002 to 4A0165) or, 2.0 m/s² (Models CIMR-A☐2A0250 to 2A0415 and 4A0208 to 4A0675)
Orientation	Install the drive vertically to maintain maximum cooling effects.

上正科技有限公司
購買、維修、找手冊零組件
電話：037-162-000
Email：service@repairtw.com
Line id.：@222
www.repairtw.com

NOTICE: *Avoid placing drive peripheral devices, transformers, or other electronics near the drive as the noise created can lead to erroneous operation. If such devices must be used in close proximity to the drive, take proper steps to shield the drive from noise.*

NOTICE: *Prevent foreign matter such as metal shavings and wire clippings from falling into the drive during installation. Failure to comply could result in damage to the drive. Place a temporary cover over the top of the drive during installation. Remove the temporary cover before startup, as the cover will reduce ventilation and cause the drive to overheat.*

◆ Installation Orientation and Spacing

Install the drive upright as illustrated in *Figure 2.1* to maintain proper cooling.

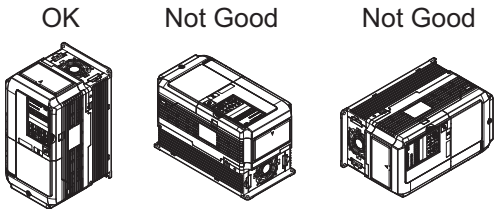

Figure 2.1 Correct Installation Orientation

■ Single Drive Installation

Figure 2.2 shows the installation distance required to maintain sufficient space for airflow and wiring.

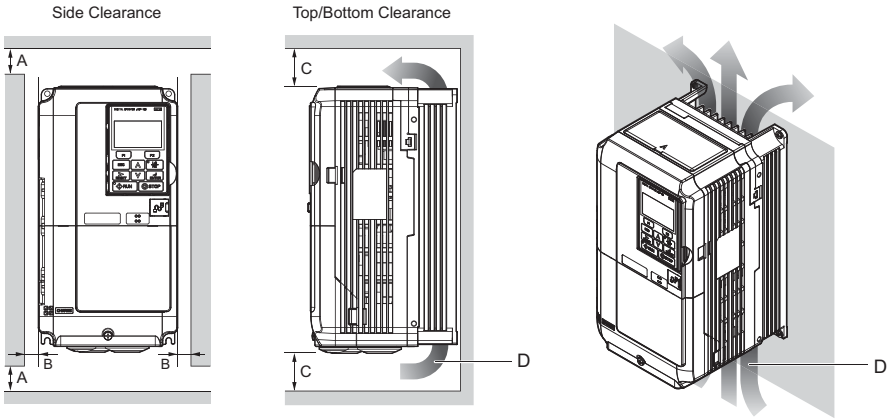

A – 50 mm minimum
B – 30 mm minimum
C – 120 mm minimum
D – Airflow direction

Figure 2.2 Correct Installation Spacing

Note: IP20/NEMA Type 1 enclosure and IP00 enclosure models require the same amount of space above and below the drive for installation.

■ Multiple Drive Installation (Side-by-Side Installation)

Models CIMR-A□2A0004 through 0081 and 4A0002 through 0044 can take advantage of Side-by-Side installation.

When installing multiple drives into the same enclosure panel, mount the drives according to *Figure 2.2*.

When mounting drives with the minimum clearance of 2 mm according to *Figure 2.3*, derating must be considered and parameter L8-35 must be set to 1. *Refer to Temperature Derating on page 395*.

上正科技有限公司
購買、維修 此手冊零組件
電話 037-466333
Email: service@repairtw.com
Line id: @zzzz
www.repairtw.com

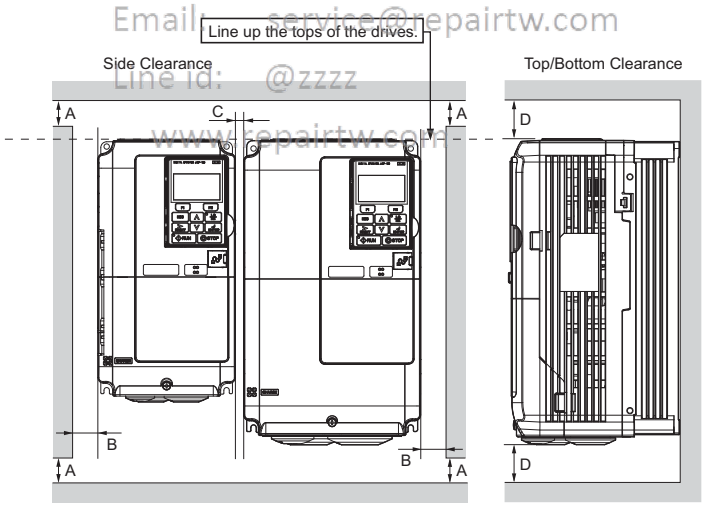

A – 50 mm minimum
B – 30 mm minimum
C – 2 mm minimum
D – 120 mm minimum

Figure 2.3 Space Between Drives (Side-by-Side Mounting)

Note: When installing drives of different heights in the same enclosure panel, the tops of the drives should line up. Leave space between the top and bottom of stacked drives for easy cooling fan replacement if required.

When drives with IP20/NEMA Type 1 enclosures are mounted side by side, the top protective covers of all drives must be removed as shown in ***Figure 2.4***. ***Refer to Top Protective Cover on page 64*** to remove and reattach the top protective cover.

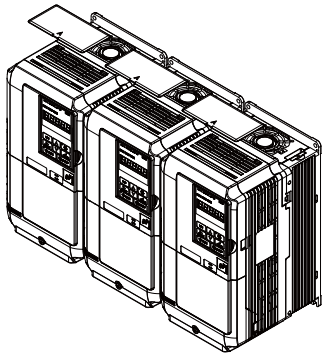

Figure 2.4 IP20/NEMA Type 1 Side-by-Side Mounting in Enclosure

◆ Digital Operator Remote Usage

■ Remote Operation

The digital operator mounted on the drive can be removed and connected to the drive using an extension cable up to 3 m long. This makes it easier to operate the drive when it is installed in a location where it can not be accessed easily.

The digital operator can also be permanently mounted in a remote location like a panel door. An extension cable and an installation support set (depending on the installation type) will be required.

上正科技有限公司
購買、維修 此手冊零組件
電話: 037-466333
Email: service@repairtw.com
Line id: @zzzz
www.repairtw.com

Note: ***Refer to Drive Options and Peripheral Devices on page 375*** for information on extension cables and installation support sets.

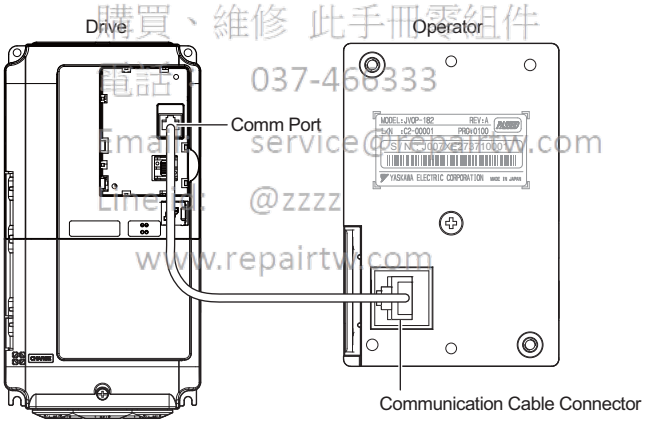

Figure 2.5 Communication Cable Connection

■ Digital Operator Remote Installation

Digital Operator Dimensions

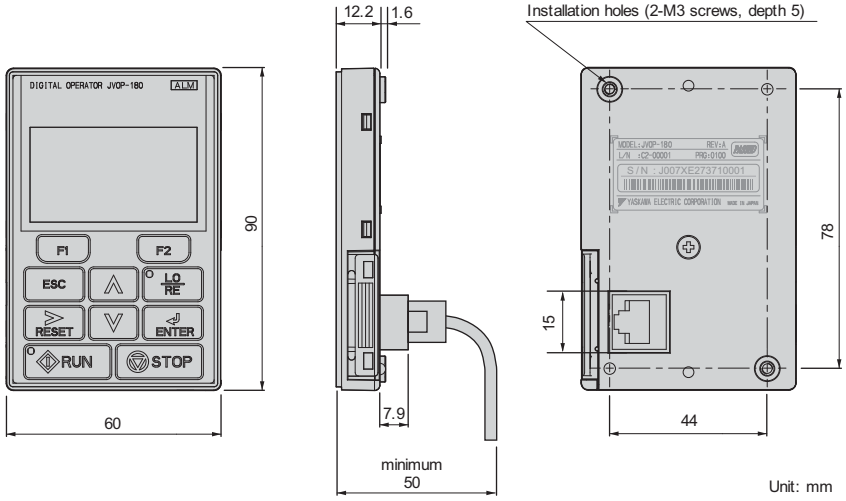

Figure 2.6 Digital Operator Dimensions

Installation Types and Required Materials

There are two ways the digital operator can be mounted to an enclosure:

1. External/face-mount installs the operator outside the enclosure panel
2. Internal/flush-mount installs the operator inside the enclosure panel

Table 2.2 Digital Operator Installation Methods and Required Tools

Installation Method	Description	Installation Support Sets	Model	Required Tools
External/Face-Mount	Simplified installation with the digital operator is mounted on the outside of the panel with two screws.	–	–	Phillips screwdriver (#1)
Internal/Flush-Mount	Encloses the digital operator in the panel. The digital operator is flush with the outside of the panel.	Installation Support Set A (for mounting with screws through holes in the panel)	EZZ020642A	Phillips screwdriver (#1, #2)
		Installation Support Set B (for use with threaded studs that are fixed to the panel)	EZZ020642B	Phillips screwdriver (#1) Wrench (7 mm)

上証科技有限公司
購買、維修 此手冊零組件
電話： 037-466333
Email: service@repairtw.com
Line id: @222
www.repairtw.com

Note: Prevent foreign matter such as metal shavings or wire clippings from falling into the drive during installation and project construction. Failure to comply could result in damage to the drive. Place a temporary cover over the top of the drive during installation. Remove the temporary cover before startup, as the cover will reduce ventilation and cause the drive to overheat.

External/Face-Mount

1. Cut an opening in the enclosure panel for the digital operator as shown in ***Figure 2.8***.
2. Position the digital operator so the display faces outwards, and mount it to the enclosure panel as shown in ***Figure 2.7***.

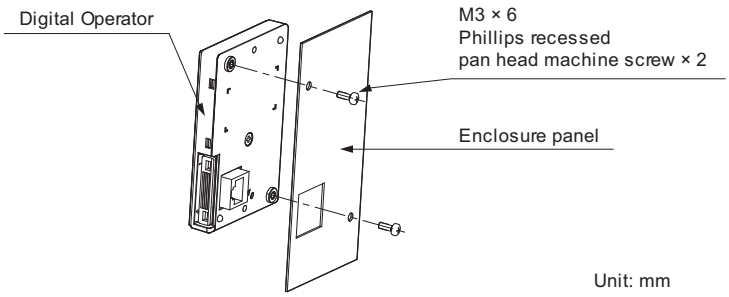

Figure 2.7 External/Face-Mount Installation

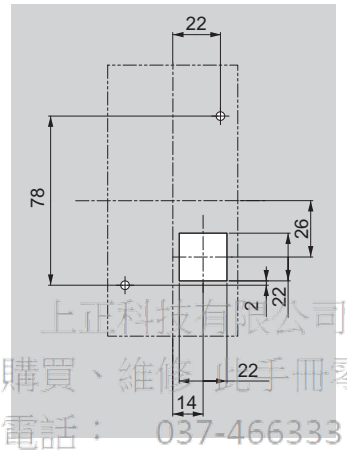

上武科技有限公司
購買、維修、此手冊零組件
電話： 037-466333
Email: service@repairtw.com
www.repairtw.com

Figure 2.8 Panel Cut-Out Dimensions (External/Face-Mount Installation)

Internal/Flush-Mount

An internal flush-mount requires an installation support set that must be purchased separately. Contact your Yaskawa representative to order an installation support set and mounting hardware. ***Figure 2.9*** illustrates how to attach the Installation Support Set A.

1. Cut an opening in the enclosure panel for the digital operator as shown in ***Figure 2.10***.
2. Mount the digital operator to the installation support.
3. Mount the installation support set and digital operator to the enclosure panel.

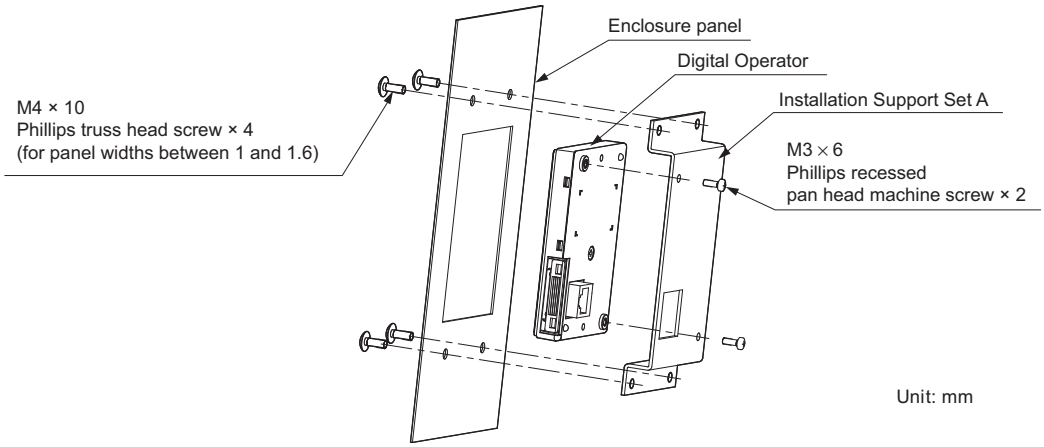

Figure 2.9 Internal/Flush Mount Installation

Note: For environments with a significant amount of dust or other airborne debris, use a gasket between the enclosure panel and the digital operator.

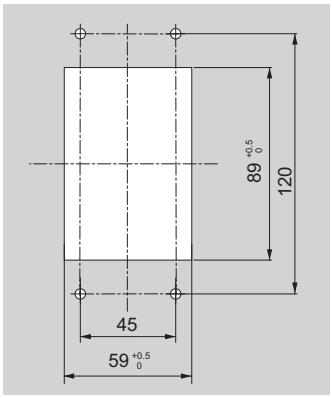

Unit : mm

Figure 2.10 Panel Cut-Out Dimensions (Internal/Flush-Mount Installation)

上正科技有限公司
購買、維修 此手冊零組件
電話： 037-466333
Email: service@repairtw.com
Line id: @zzzz
www.repairtw.com

◆ Exterior and Mounting Dimensions

Table 2.3 Drive Models and Types

Protective Design	Drive Model CIMR-A☐		Page
	Three-Phase 200 V Class	Three-Phase 400 V Class	
IP20/NEMA Type 1 Enclosure	2A0004F 2A0006F 2A0010F 2A0012F 2A0021F 2A0030F 2A0040F 2A0056F 2A0069F 2A0081F	4A0002F 4A0004F 4A0005F 4A0007F 4A0009F 4A0011F 4A0018F 4A0023F 4A0031F 4A0038F 4A0044F	*47*
IP00 Enclosure	2A0110A 2A0138A 2A0169A 2A0211A 2A0250A 2A0312A 2A0360A 2A0415A	4A0058A 4A0072A 4A0088A 4A0103A 4A0139A 4A0165A 4A0208A 4A0250A 4A0296A 4A0362A 4A0414A 4A0515A 4A0675A	*48*

上正科技有限公司
購買、維修 此手冊零組件
電話： 037-466333
Email: service@repairtw.com
Line id: @zzzz
www.repairtw.com

■ IP20/NEMA Type 1 Enclosure Drives

Note: IP20/NEMA Type 1 enclosure drives are equipped with a top cover. Removing this cover voids NEMA Type 1 protection but still keeps IP20 conformity.

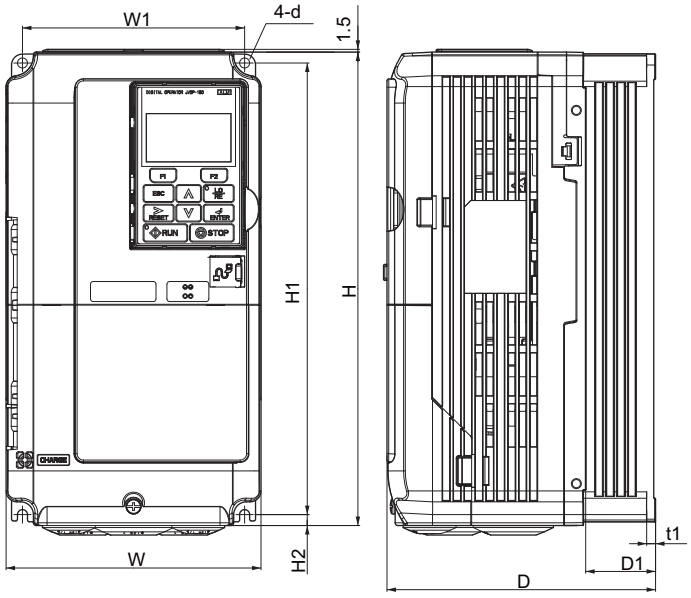

Figure 1

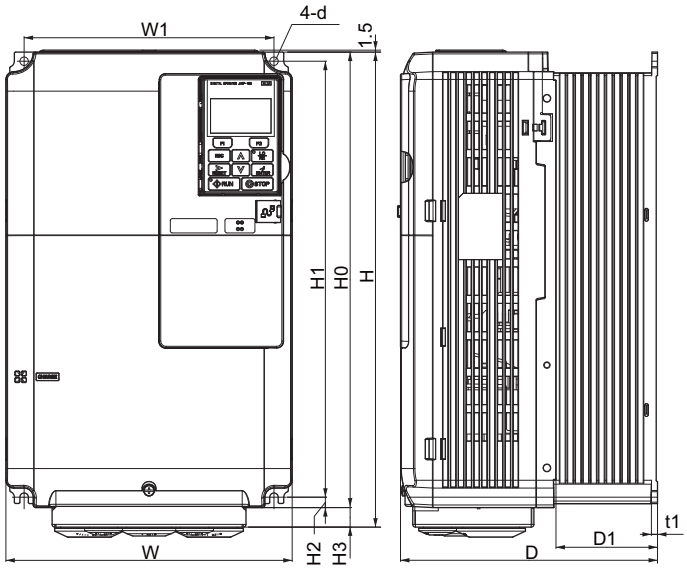

Figure 2

Table 2.4 Dimensions for IP20/NEMA Type 1 Enclosure: 200 V Class

Drive Model CIMR-A□2A	Dimensions (mm)													
	Figure	W	H	D	W1	H0	H1	H2	H3	D1	t1	t2	d	Weight (kg)
0004	1	140	260	147	122	–	248	6	–	38	5	–	M5	3.1
0006		140	260	147	122	–	248	6	–	38	5	–	M5	3.1
0010		140	260	147	122	–	248	6	–	38	5	–	M5	3.2
0012		140	260	147	122	–	248	6	–	38	5	–	M5	3.2
0021		140	260	164	122	–	248	6	–	55	5	–	M5	3.5
0030		140	260	167	122	–	248	6	–	55	5	–	M5	4.0
0040		140	260	167	122	–	248	6	–	55	5	–	M5	4.0
0056		180	300	187	160	–	284	8	–	75	5	–	M5	5.6
0069		220	350	197	192	–	335	8	–	78	5	–	M6	8.7
0081	2	220	365	197	192	350	335	8	15	78	5	–	M6	9.7

上正科技有限公司
購買、維修 此手冊零組件
電話：037-466333
Email: service@repairtw.com
Line id: @zzzz
www.repairtw.com

Table 2.5 Dimensions for IP20/NEMA Type 1 Enclosure: 400 V Class

Drive Model CIMR-A□4A	Dimensions (mm)													
	Figure	W	H	D	W1	H0	H1	H2	H3	D1	t1	t2	d	Weight (kg)
0002	1	140	260	147	122	–	248	6	–	38	5	–	M5	3.2
0004		140	260	147	122	–	248	6	–	38	5	–	M5	3.2
0005		140	260	147	122	–	248	6	–	38	5	–	M5	3.2
0007		140	260	164	122	–	248	6	–	55	5	–	M5	3.4
0009		140	260	164	122	–	248	6	–	55	5	–	M5	3.5
0011		140	260	164	122	–	248	6	–	55	5	–	M5	3.5
0018		140	260	167	122	–	248	6	–	55	5	–	M5	3.9
0023		140	260	167	122	–	248	6	–	55	5	–	M5	3.9
0031		180	300	167	160	–	284	8	–	55	5	–	M5	5.4
0038		180	300	187	160	–	284	8	–	75	5	–	M5	5.7
0044		220	350	197	192	–	335	8	–	78	5	–	M6	8.3

■ IP00 Enclosure Drives

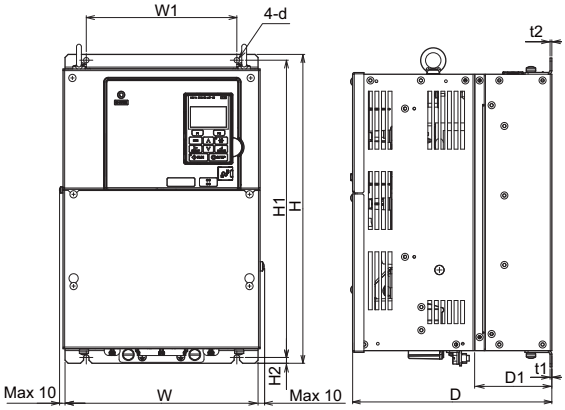

Figure 1

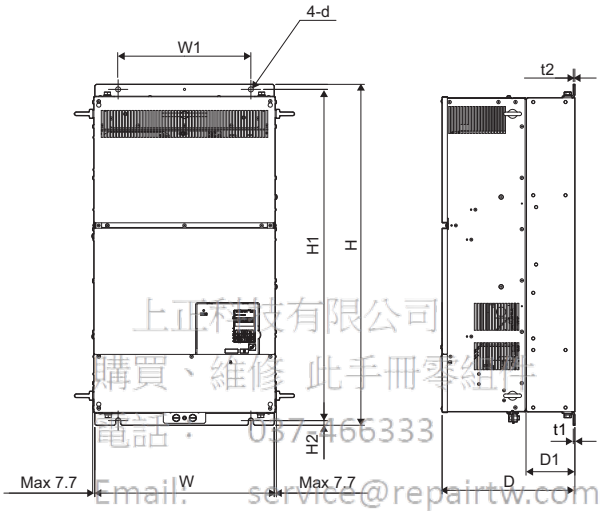

上正科技有限公司
購買、維修 此手冊零組件
電話： 037466333
Email: service@repairtw.com
Line id: @zzzz
www.repairtw.com

Figure 2

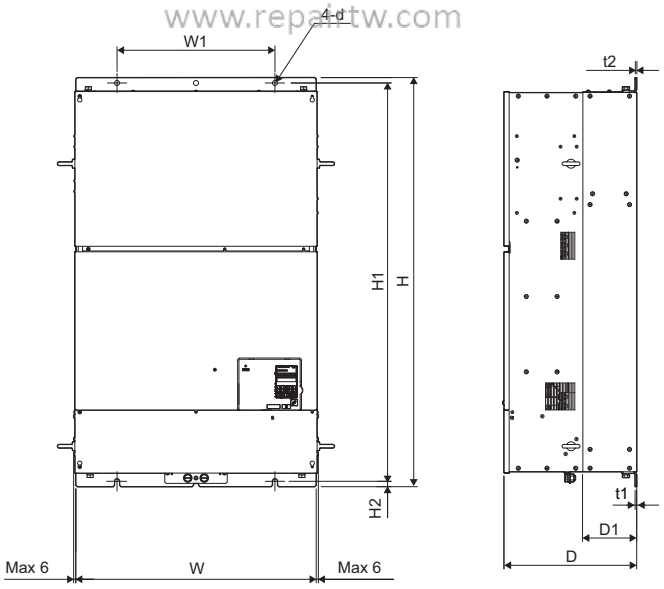

Figure 3

Table 2.6 Dimensions for IP00 Enclosure: 200 V Class

Drive Model CIMR-A□2A	Dimensions (mm)											
	Figure	W	H	D	W1	H1	H2	D1	t1	t2	d	Weight (kg)
0110	1	250	400	258	195	385	7.5	100	2.3	2.3	M6	21
0138		275	450	258	220	435	7.5	100	2.3	2.3	M6	25
0169		325	550	283	260	535	7.5	110	2.3	2.3	M6	37
0211		325	550	283	260	535	7.5	110	2.3	2.3	M6	38
0250		450	705	330	325	680	12.5	130	3.2	3.2	M10	76
0312		450	705	330	325	680	12.5	130	3.2	3.2	M10	80
0360		500	800	350	370	773	13	130	4.5	4.5	M12	98
0415		500	800	350	370	773	13	130	4.5	4.5	M12	99

Table 2.7 Dimensions for IP00 Enclosure: 400 V Class

Drive Model CIMR-A□4A	Dimensions (mm)											
	Figure	W	H	D	W1	H1	H2	D1	t1	t2	d	Weight (kg)
0058	1	250	400	258	195	385	7.5	100	2.3	2.3	M6	21
0072		275	450	258	220	435	7.5	100	2.3	2.3	M6	25
0088		325	510	258	260	495	7.5	105	2.3	3.2	M6	36
0103		325	510	258	260	495	7.5	105	2.3	3.2	M6	36
0139		325	550	283	260	535	7.5	110	2.3	2.3	M6	41
0165		325	550	283	260	535	7.5	110	2.3	2.3	M6	42
0208		450	705	330	325	680	12.5	130	3.2	3.2	M10	79
0250		500	800	350	370	773	13	130	4.5	4.5	M12	96
0296		500	800	350	370	773	13	130	4.5	4.5	M12	102
0362		500	800	350	370	773	13	130	4.5	4.5	M12	107
0414	2	500	950	370	370	923	13	135	4.5	4.5	M12	125
0515	3	670	1140	370	440	1110	15	150	4.5	4.5	M12	216
0675		670	1140	370	440	1110	15	150	4.5	4.5	M12	221

[illegible]科技有限公司
購買、維修 此手冊零組件
電話： 037-466333
Email: service@repairtw.com
Line id: @zzzz
www.repairtw.com

上正科技有限公司
購買、維修 此手冊零組件
電話： 037-466333
Email: service@repairtw.com
Line id: @zzzz
www.repairtw.com

3

Electrical Installation

This chapter explains proper procedures for wiring the control circuit terminals, motor, and power supply.

3.1 SECTION SAFETY 52
3.2 STANDARD CONNECTION DIAGRAM 54
3.3 MAIN CIRCUIT CONNECTION DIAGRAM 56
3.4 TERMINAL BLOCK CONFIGURATION 57
3.5 TERMINAL COVER 59
3.6 DIGITAL OPERATOR AND FRONT COVER 61
3.7 TOP PROTECTIVE COVER 64
3.8 MAIN CIRCUIT WIRING 65
3.9 CONTROL CIRCUIT WIRING 72
3.10 CONTROL I/O CONNECTIONS 77
3.11 CONNECT TO A PC 81
3.12 EXTERNAL INTERLOCK 82
3.13 WIRING CHECKLIST 83

上正科技有限公司
購買、維修 此手冊零組件
電話： 037-466333
Email: service@repairtw.com
Line id: @zzzz
www.repairtw.com

3.1 Section Safety

⚠ DANGER

Electrical Shock Hazard

Do not connect or disconnect wiring while the power is on.

Failure to comply will result in death or serious injury.

⚠ WARNING

Electrical Shock Hazard

Do not operate equipment with covers removed.

Failure to comply could result in death or serious injury.

The diagrams in this section may show drives without covers or safety shields to show details. Be sure to reinstall covers or shields before operating the drives and run the drives according to the instructions described in this manual.

Always ground the motor-side grounding terminal.

Improper equipment grounding could result in death or serious injury by contacting the motor case.

Do not perform work on the drive while wearing loose clothing, jewelry or without eye protection.

Failure to comply could result in death or serious injury.

Remove all metal objects such as watches and rings, secure loose clothing, and wear eye protection before beginning work on the drive.

Do not remove covers or touch circuit boards while the power is on.

Failure to comply could result in death or serious injury.

Do not allow unqualified personnel to perform work on the drive.

Failure to comply could result in death or serious injury.

Installation, maintenance, inspection, and servicing must be performed only by authorized personnel familiar with installation, adjustment, and maintenance of AC drives.

Do not touch any terminals before the capacitors have fully discharged.

Failure to comply could result in death or serious injury.

Before wiring terminals, disconnect all power to the equipment. The internal capacitor remains charged even after the power supply is turned off. After shutting off the power, wait for at least the amount of time specified on the drive before touching any components.

上正科技有限公司
購買、維修 此手冊零組件
電話： 037-466333
Email: service@repairtw.com
Line Id: @zzzz
www.repairtw.com

Fire Hazard

Tighten all terminal screws to the specified tightening torque.

Loose electrical connections could result in death or serious injury by fire due to overheating of electrical connections.

Do not use improper combustible materials.

Failure to comply could result in death or serious injury by fire.

Do not install the drive to a combustible surface. Never place combustible materials on the drive.

Do not use an improper voltage source.

Failure to comply could result in death or serious injury by fire.

Verify that the rated voltage of the drive matches the voltage of the incoming power supply before applying power.

When installing dynamic braking options, perform all wiring exactly as specified in the wiring diagrams provided.

Failure to do so can result in fire. Improper wiring may damage braking components.

⚠ CAUTION

Do not carry the drive by the front cover or the terminal cover.

Failure to comply may cause the main body of the drive to fall, resulting in minor or moderate injury.

NOTICE

Observe proper electrostatic discharge procedures (ESD) when handling the drive and circuit boards.

Failure to comply may result in ESD damage to the drive circuitry.

Never connect or disconnect the motor from the drive while the drive is outputting voltage.

Improper equipment sequencing could result in damage to the drive.

Do not use unshielded cable for control wiring.

Failure to comply may cause electrical interference resulting in poor system performance. Use shielded, twisted-pair wires and ground the shield to the ground terminal of the drive.

Do not allow unqualified personnel to use the product.

Failure to comply could result in damage to the drive or braking circuit.

Carefully review instruction manual TOBPC72060000 when connecting a dynamic braking option to the drive.

Do not modify the drive circuitry.

Failure to comply could result in damage to the drive and will void warranty.

Yaskawa is not responsible for any modification of the product made by the user. This product must not be modified.

Check all the wiring to ensure that all connections are correct after installing the drive and connecting any other devices.

Failure to comply could result in damage to the drive.

上正科技有限公司
購買 維修 此手冊零組件
電話： 037-466333
Email: service@repairtw.com
Line id: @zzzz
www.repairtw.com

3.2 Standard Connection Diagram

Connect the drive and peripheral devices as shown in ***Figure 3.1***. It is possible to set and run the drive via the digital operator without connecting digital I/O wiring. This section does not discuss drive operation; ***Refer to Start-Up Programming & Operation on page 85*** for instructions on operating the drive.

NOTICE: *Inadequate wiring could result in damage to the drive. Install adequate branch circuit short circuit protection per applicable codes. The drive is suitable for circuits capable of delivering not more than 100,000 RMS symmetrical amperes, 240 Vac maximum (200 V Class) and 480 Vac maximum (400 V Class).*

NOTICE: *When the input voltage is 440 V or higher or the wiring distance is greater than 100 meters, pay special attention to the motor insulation voltage or use a drive duty motor. Failure to comply could lead to motor insulation breakdown.*

NOTICE: *Do not connect AC control circuit ground to drive enclosure. Improper drive grounding can cause control circuit malfunction.*

NOTICE: *The minimum load for the relay outputs M1-M2, M3-M4, M5-M6, and MA-MB-MC is 10 mA.*

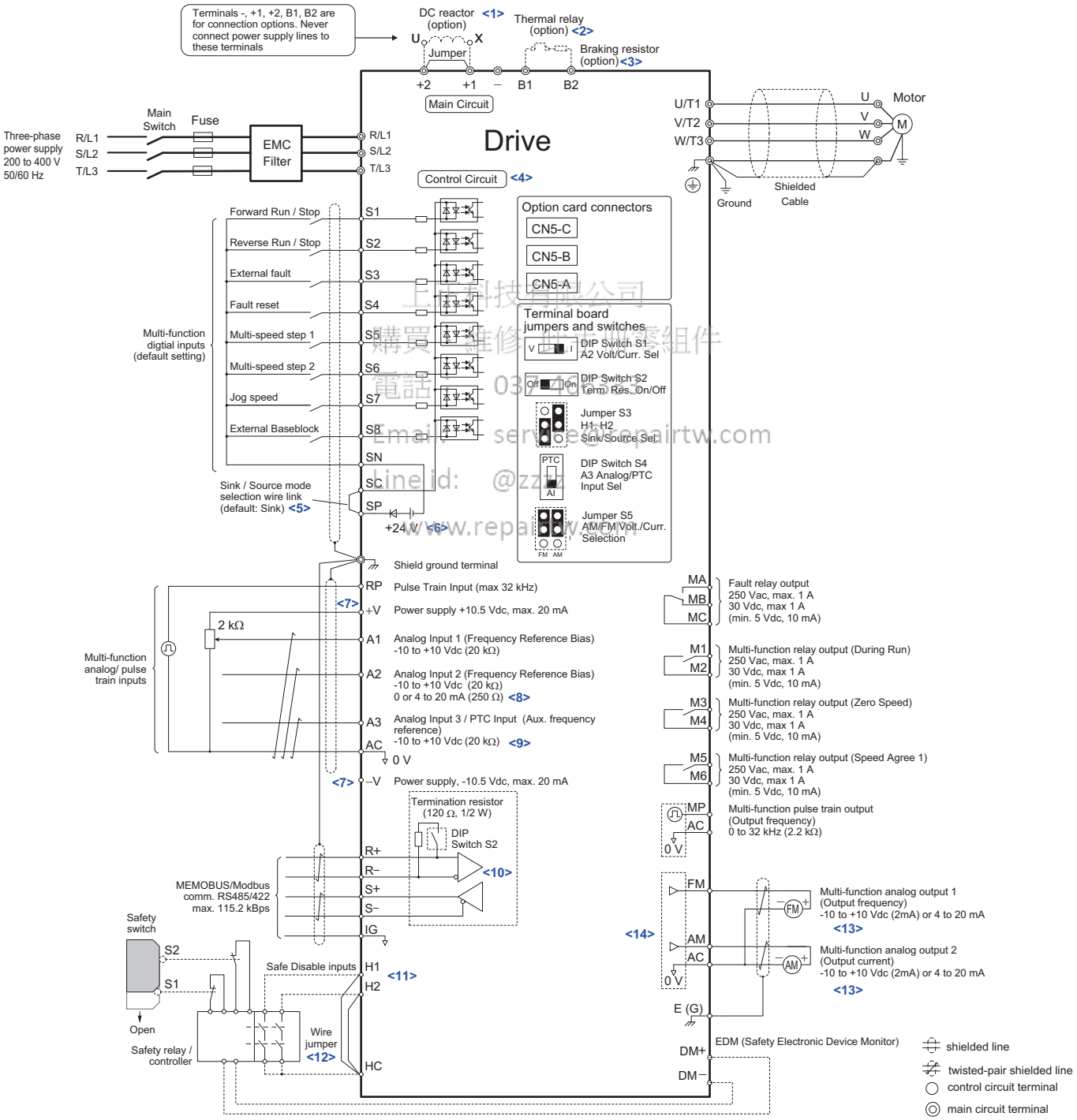

Figure 3.1 Drive Standard Connection Diagram (example: CIMR-A□2A0040)

<1> Remove the jumper when installing a DC reactor. Models CIMR-A□2A0110 through 2A0415 and 4A0058 through 4A0675 come with a built-in DC reactor.
<2> When installing a dynamic braking option, a thermal relay sequence should also be set up to shut off power to the drive in case overheat occurs.
<3> The drive's protection function for the internal braking transistor needs to be disabled (L8-55 = 0) if using a regen unit such as a regen converter or some type of dynamic braking options (and therefore not the internal braking transistor). If left enabled, a braking resistor fault (rF) may result. Make sure Stall Prevention is disabled (L3-04 = 0) whenever using a regenerative converter, a regenerative unit or a dynamic braking option. If left enabled, the drive may not stop within the specified deceleration time.
<4> Supplying power to the control circuit separately from the main circuit requires a 24 V power supply (option).
<5> This figure shows an example of a sequence input to S1 through S8 using a non-powered relay or an NPN transistor. Install the wire link between terminals SC-SP for Sink mode and SC-SN for Source mode. Leave it out for external power supply. Never short terminals SP and SN as doing so will damage the drive.
<6> The maximum current supplied by this voltage source is 150 mA if no digital input option card DI-A3 is used.
<7> The maximum output current capacity for the +V and -V terminals on the control circuit is 20 mA. Never short terminals +V, -V, and AC, as this can cause erroneous operation or damage the drive.
<8> Set DIP switch S1 to select between a voltage or current input signal to terminal A2. The default setting is for current input.
<9> Set DIP switch S4 to select between analog or PTC input for terminal A3.
<10> Enable the termination resistor in the last drive in a MEMOBUS network by setting DIP switch S2 to the ON position.
<11> Use jumper S3 to select between Sink mode, Source mode or external power supply for the Safe Disable inputs.
<12> Disconnect the wire jumper between H1 - HC and H2 - HC when utilizing the Safe Disable input.
<13> Monitor outputs work with devices such as analog frequency meters, ammeters, voltmeters, and wattmeters. They are not intended for use as a feedback-type of signal.
<14> Use jumper S5 to selection between voltage or current output signals at terminal AM and FM. Set parameters H4-07 and H4-08 accordingly.

WARNING! *Sudden Movement Hazard. Do not close the wiring for the control circuit unless the multifunction input terminal parameters are properly set. Improper sequencing of run/stop circuitry could result in death or serious injury from moving equipment.*

WARNING! *Sudden Movement Hazard. Ensure start/stop and safety circuits are wired properly and in the correct state before energizing the drive. Failure to comply could result in death or serious injury from moving equipment. When programmed for 3-Wire control, a momentary closure on terminal S1 may cause the drive to start.*

WARNING! *When 3-Wire sequence is used, set the drive to 3-Wire sequence before wiring the control terminals and ensure parameter b1-17 is set to 0 (drive does not accept a run command at power up (default). If the drive is wired for 3-Wire sequence but set up for 2-Wire sequence (default) and if parameter b1-17 is set to 1 (drive accepts a Run command at power up), the motor will rotate in reverse direction at power up of the drive and may cause injury.*

WARNING! *When the application preset function is executed (or A1-06 is set to any value other than 0) the drive I/O terminal functions change. This may cause unexpected operation and potential damage to equipment or injury.*

WARNING! *When using the automatic fault restart function while the wiring is made to shut off the power supply when a drive fault occurs, make sure the drive is set not to trigger a fault output during fault restart (L5-02=0, default). Otherwise the fault restart function can not work properly.*

原廠材料有限公司
購買、維修 此手冊零組件
電話： 037-466333
Email: service@repairtw.com
Line id: @zzzz
www.repairtw.com

3.3 Main Circuit Connection Diagram

Refer to diagrams in this section when wiring the drive's main circuit. Connections may vary based on drive capacity. The DC power supply for the main circuit also provides power to the control circuit.

NOTICE: *Do not use the negative DC bus terminal "-" as a ground terminal. This terminal is at high DC voltage potential. Improper wiring connections could damage the drive.*

◆ Three-Phase 200 V Class (CIMR-A□2A0004 to 0081) Three-Phase 400 V Class (CIMR-A□4A0002 to 0044)

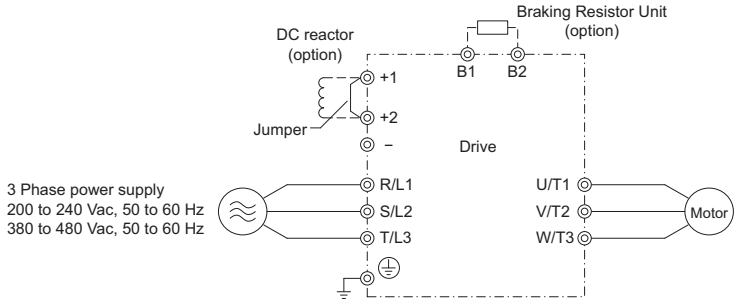

Figure 3.2 Connecting Main Circuit Terminals

◆ Three-Phase 200 V Class (CIMR-A□2A0110, 0138) Three-Phase 400 V Class (CIMR-A□4A0058, 0072)

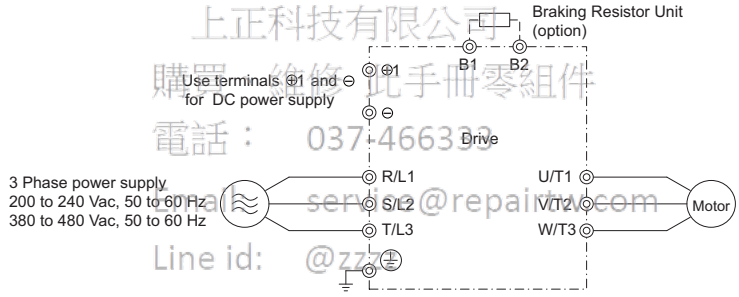

上正科技有限公司
購買、維修此手冊零組件
電話： 037-466339
Email: service@repairtw.com
Line id: @zzz
www.repairtw.com

Figure 3.3 Connecting Main Circuit Terminals

◆ Three-Phase 200 V Class (CIMR-A□2A0169 to 0415) Three-Phase 400 V Class (CIMR-A□4A0088 to 0675)

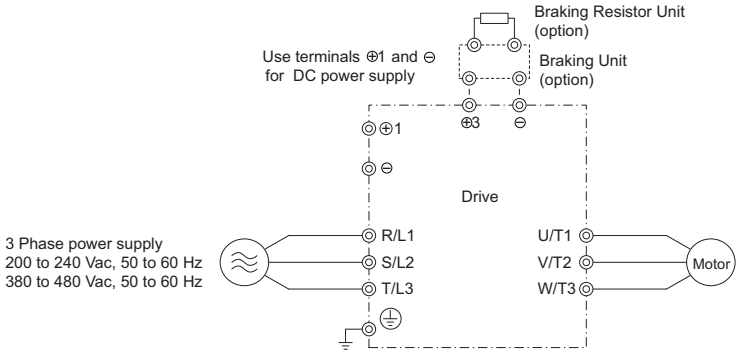

Figure 3.4 Connecting Main Circuit Terminals

3.4 Terminal Block Configuration

Figure 3.5 shows the different main circuit terminal arrangements for the drive capacities.

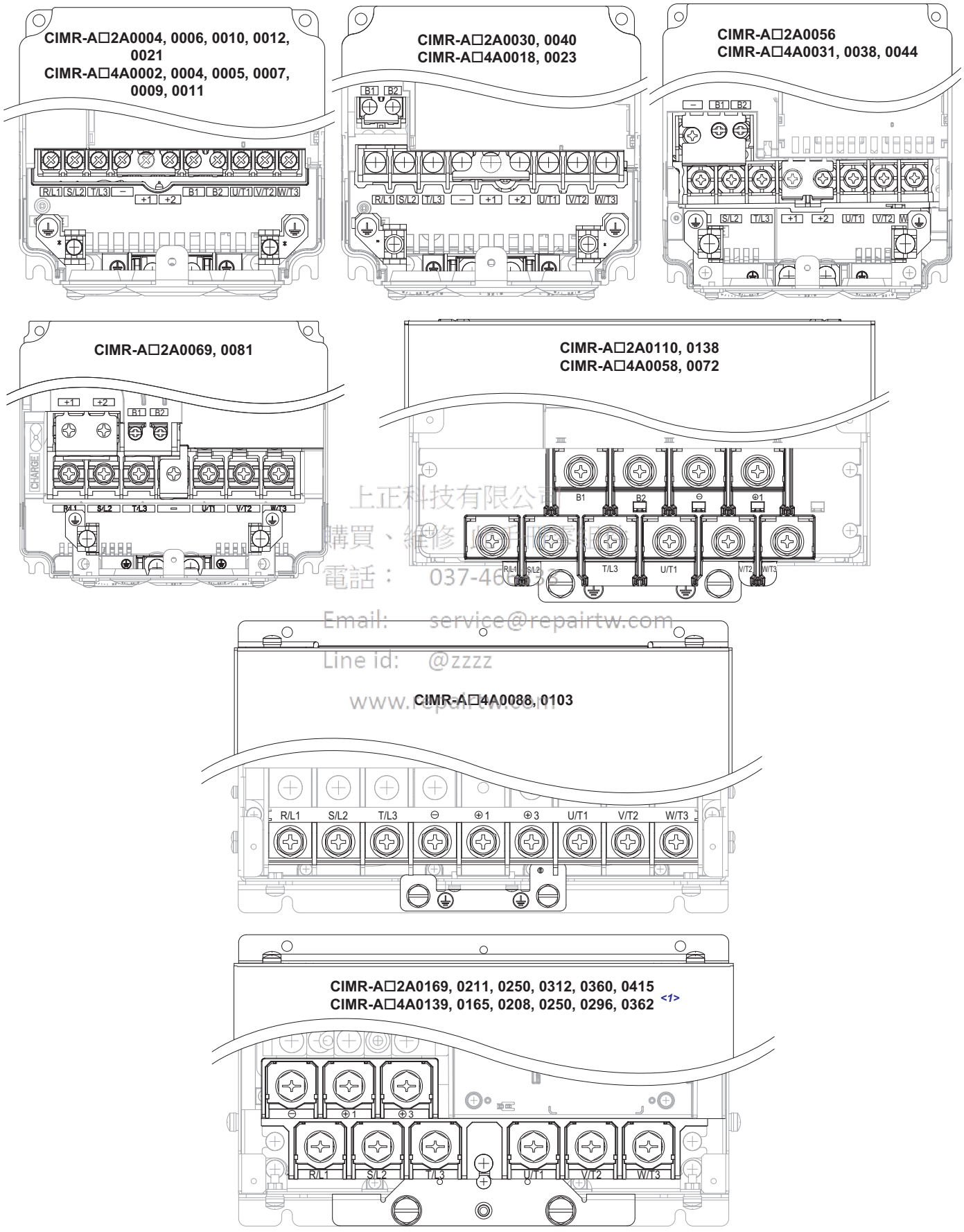

上正科技有限公司
購買、維修
電話： 037-46
Email: service@repairtw.com
Line id: @zzzz
www.repairtw.com

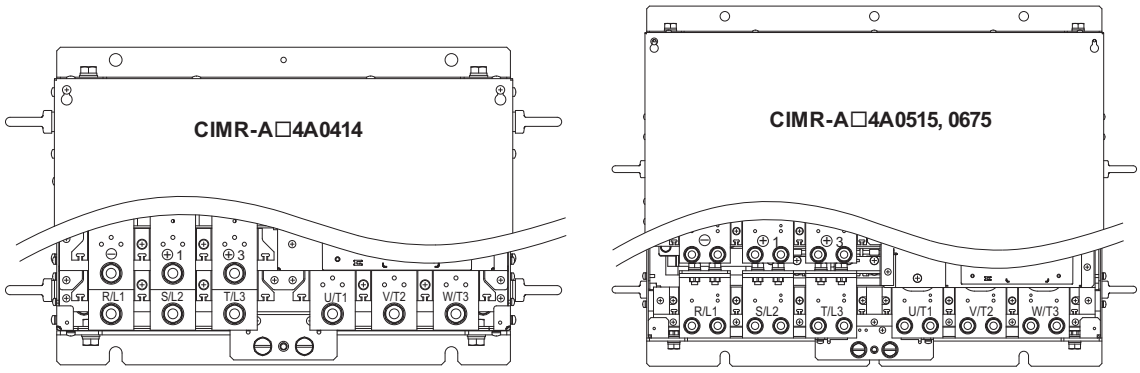

Figure 3.5 Main Circuit Terminal Block Configuration

<1> Terminal board design differs slightly for models CIMR-A□2A0250 through 2A0415 and 4A0208 through 4A0362.

上正科技有限公司
購買、維修 此手冊零組件
電話： 037-466333
Email: service@repairtw.com
Line id: @zzzz
www.repairtw.com

3.5 Terminal Cover

Follow the procedure below to remove the terminal cover for wiring and to reattach the terminal cover after wiring is complete.

◆ CIMR-A□2A0004 to 0081, 4A0002 to 0044 (IP20/NEMA Type 1 Enclosure)

■ Removing the Terminal Cover

1. Loosen the terminal cover screw.

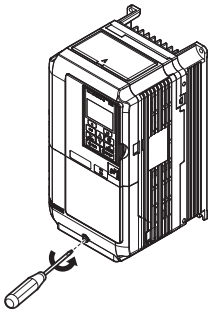

Figure 3.6 Removing the Terminal Cover on an IP20/NEMA Type 1 Enclosure Drive

2. Push in on the hook located on the bottom of the terminal cover, and gently pull forward. This should remove the terminal cover.

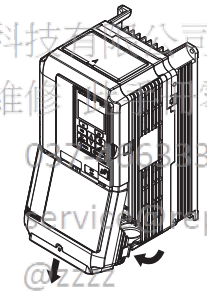

上正科技有限公司
購買、維修
電話：
Email:
Line id:
www.repairtw.com

Figure 3.7 Removing the Terminal Cover on an IP20/NEMA Type 1 Enclosure Drive

■ Reattaching the Terminal Cover

Power lines and signal wiring should pass through the opening provided. *Refer to Wiring the Main Circuit Terminal on page 71* and *Wiring the Control Circuit Terminal on page 74* for details on wiring.

After all wiring to the drive and other devices is complete, reattach the terminal cover.

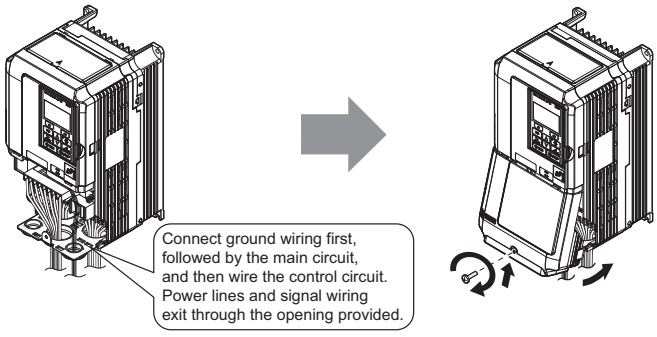

Figure 3.8 Reattaching the Terminal Cover on an IP20/NEMA Type 1 Enclosure Drive

◆ CIMR-A□2A0110 to 0415, 4A0058 to 0675 (IP00 Enclosure)

■ Removing the Terminal Cover

1. Loosen the screws <1> on the terminal cover, then pull down on the cover.

CAUTION! *Do not completely remove the cover screws, just loosen them. If the cover screws are removed completely, the terminal cover may fall off causing an injury.*

<1> The following drives have three screws on the top of terminal cover.
-CIMR-A□2A0250 to 2A0415
-CIMR-A□4A0208 to 4A0675

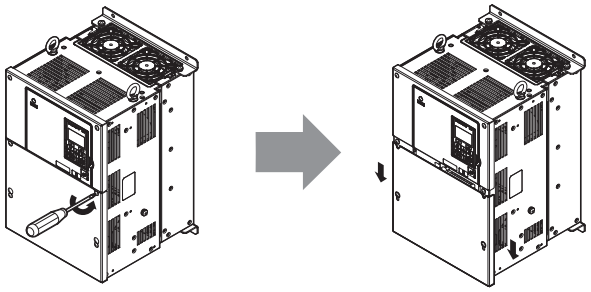

Figure 3.9 Removing the Terminal Cover on an IP00 Enclosure Drive

2. Pull forward on the terminal cover to free it from the drive.

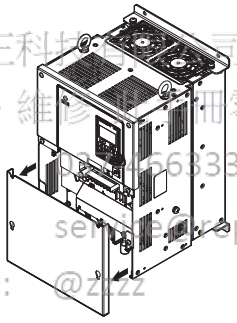

上正科技有限公司
購買、維修 此手冊零組件
電話：
Email: service@repairtw.com
Line id: @zzzz
www.repairtw.com

Figure 3.10 Removing the Terminal Cover on an IP00 Enclosure Drive

■ Reattaching the Terminal Cover

Once wiring to the terminal board and other devices is complete, double check all connections and finally reattach the terminal cover. ***Refer to Wiring the Main Circuit Terminal on page 71*** and ***Wiring the Control Circuit Terminal on page 74*** for details on wiring.

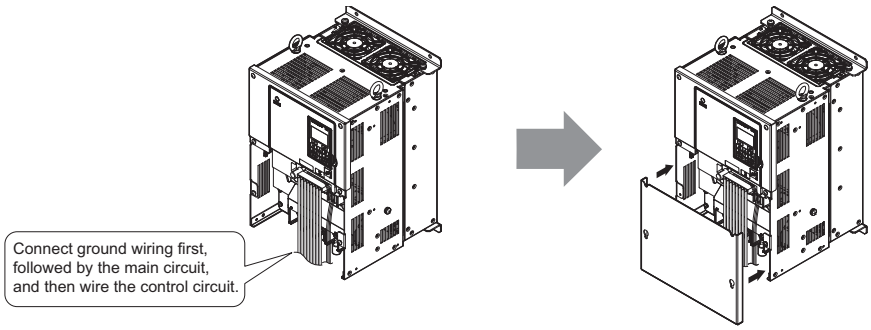

Figure 3.11 Reattaching the Terminal Cover on an IP00 Enclosure Drive

3.6 Digital Operator and Front Cover

The digital operator can be detached from the drive for remote operation, or when the front cover has to be opened to install an option card.

NOTICE: *Be sure the digital operator has been removed prior to opening the front cover or reattaching it. Leaving the digital operator plugged into the drive when removing the front cover can result in erroneous operation caused by a poor connection. Before reattaching the operator make sure the front cover has been firmly fastened back into place.*

◆ Removing/Reattaching the Digital Operator

■ Removing the Digital Operator

While pinching inwards on the hook located on the right side of the digital operator, pull forward and remove the operator from the drive.

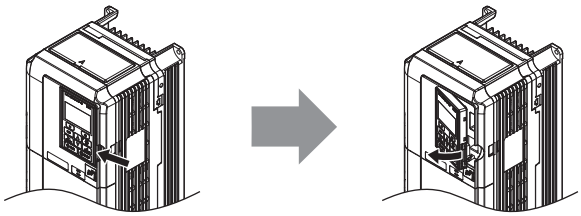

Figure 3.12 Removing the Digital Operator

■ Reattaching the Digital Operator

Insert the digital operator into the opening in the front cover while aligning it with the notches on the left side of the opening. Next press gently on the right side of the operator until it clicks into place.

上正科技有限公司
購買、維修 此手冊零組件
電話： 037-246333
Email: service@repairtw.com
Line id: @rsc
www.repairtw.com

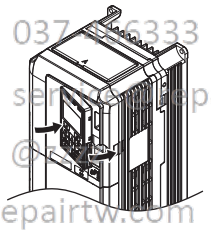

Figure 3.13 Reattaching the Digital Operator

◆ Removing/Reattaching the Front Cover

■ Removing the Front Cover

2A0004 to 2A0081 and 4A0002 to 4A0044

After removing the terminal cover and the digital operator, loosen the screw that affixes the front cover (model CIMR-A☐2A0056, 4A0031, 4A0038 do not use a screw to affix the front cover). Pinch inwards on hooks found on each side of the front cover, then pull forward to remove it from the drive.

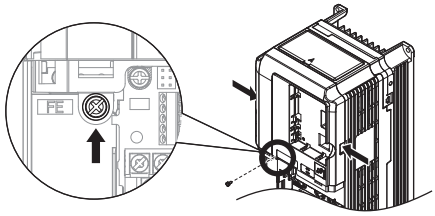

Figure 3.14 Remove the Front Cover (2A0004 to 2A0081 and 4A0002 to 4A0044)

2A0110 to 2A0415 and 4A0058 to 4A0675

1. Remove the terminal cover and the digital operator.
2. Loosen the installation screw on the front cover.
3. Use a straight-edge screwdriver to loosen the hooks on each side of the cover that hold it in place.

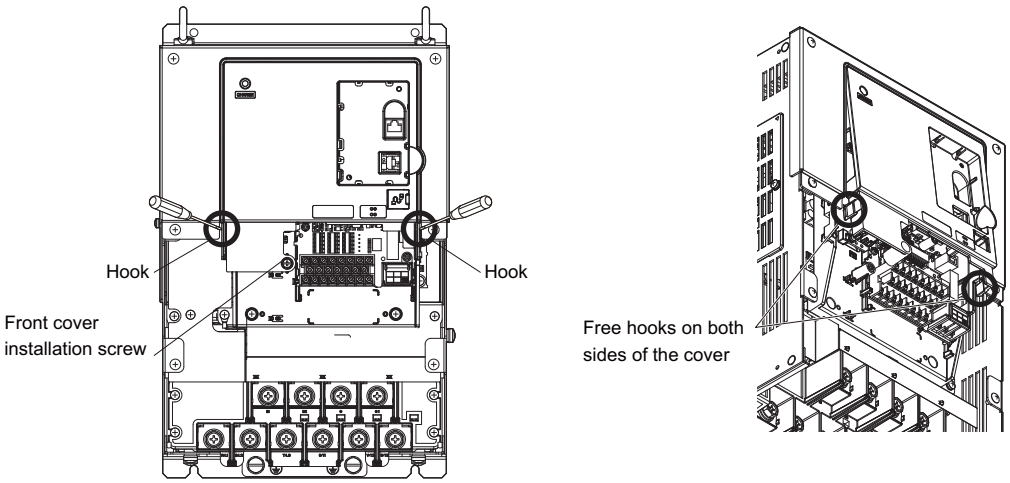

Figure 3.15 Remove the Front Cover (2A0110 to 2A0415 and 4A0058 to 4A0675)

4. First unhook the left side of the front cover, then swing the left side towards you as shown in the figure below until the cover comes off.

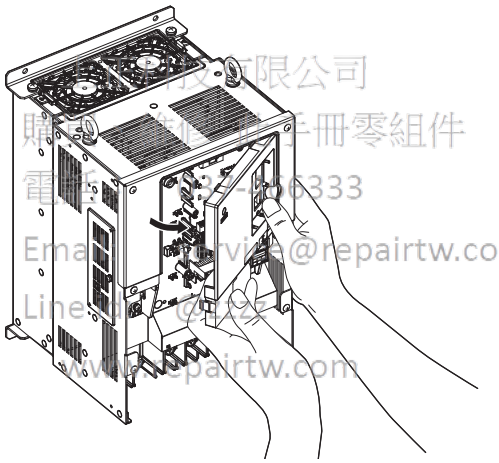

Figure 3.16 Remove the Front Cover (2A0110 to 2A0415 and 4A0058 to 4A0675)

■ Reattaching the Front Cover

2A0004 to 2A0081 and 4A0002 to 4A0044

Reverse the instructions given in *Removing the Front Cover on page 61* to reattach the front cover. Pinch inwards on the hooks found on each side of the front cover while guiding it back into the drive. Make sure it clicks firmly into place.

2A0110 to 2A0415 and 4A0058 to 4A0675

1. Slide the front cover so that the hooks on the top connect to the drive.

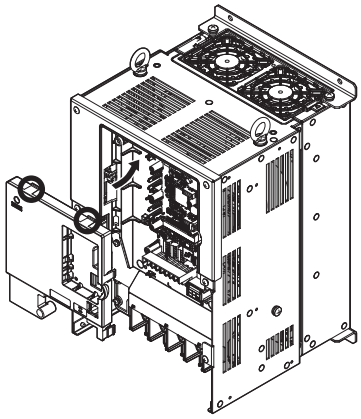

Figure 3.17 Reattach the Front Cover (2A0110 to 2A0415 and 4A0058 to 4A0675)

2. Once the hooks have connected to the drive, press firmly on the cover to make sure it locks into place.

上正科技有限公司
購買、維修 此手冊零組件
電話： 037-466333
Email: service@repairtw.com
Line id: @zzzz
www.repairtw.com

3.7 Top Protective Cover

Drive models CIMR-A□2A0004 to 0081 and 4A0002 to 0058 are designed with NEMA Type 1 specifications, and have a top protective cover on the top. Removing this top protective cover voids the NEMA Type 1 conformance but still keeps a protection degree in accordance with IP20 enclosure.

◆ Removing the Top Protective Cover

Insert the tip of a straight-edge screwdriver into the small openings located on the front edge of the top protective cover. Gently apply pressure as shown in the figure below to free the cover from the drive.

Note: Removing the top protective cover from a IP20/NEMA Type 1 enclosure drive voids the NEMA Type 1 protection but still keeps IP20 conformity.

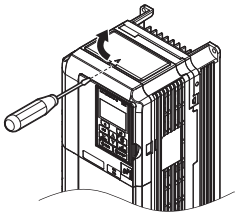

Figure 3.18 Removing the Top Protective Cover

◆ Reattaching the Top Protective Cover

Align the small protruding hooks on the sides of the top protective cover with the corresponding mounting holes on the top of the drive. Pinch the hooks inward so that the they connect with the mounting holes and fasten the top protective cover back into place.

北亞科技有限公司
購買、維修 此手冊零組件
電話：037-466333
Email: service@repairtw.com
Line id:
www.repairtw.com

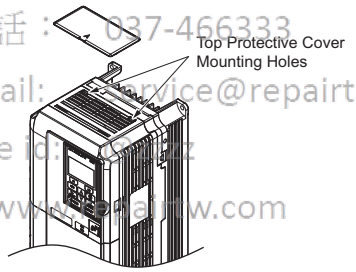

Figure 3.19 Reattaching the Top Protective Cover

3.8 Main Circuit Wiring

This section describes the functions, specifications, and procedures required to safely and properly wire the main circuit in the drive.

NOTICE: *Do not solder the ends of wire connections to the drive. Soldered wiring connections can loosen over time. Improper wiring practices could result in drive malfunction due to loose terminal connections.*

NOTICE: *Do not switch the drive input to start or stop the motor. Frequently switching the drive on and off shortens the lifetime of the DC bus charge circuit and the DC bus capacitors, and can cause premature drive failures. For the full performance life, refrain from switching the drive on and off more than once every 30 minutes.*

◆ Main Circuit Terminal Functions

Table 3.1 Main Circuit Terminal Functions

Terminal		Type			Function	Page
200 V Class / 400 V Class	Model CIMR-A□	2A0004 to 2A0081 / 4A0002 to 4A0044	2A0110, 2A0138 / 4A0058 to 4A0072	2A0169 to 2A0415 / 4A0088 to 4A0675		
R/L1 S/L2 T/L3		Main circuit power supply input			Connects line power to the drive	54
U/T1 V/T2 W/T3		Drive output			Connects to the motor	54
B1 B2		Braking resistor		not available	Available for connecting a braking resistor or a braking resistor unit option	379
+2		• DC reactor connection (+1, +2) (remove the shorting bar between +1 and +2) • DC power supply input (+1, –)	not available	• DC power supply input (+1, –) • Braking unit connection (+3, –)	For connection • of the drive to a DC power supply (terminals +1 and – are not EU or UL approved) • of dynamic braking options • of a DC reactor	383
+1 –			• DC power supply input (+1, –)			
+3		not available				
⏚		–			Grounding terminal	71

上正科技有限公司
購買、維修 此型號零組件
電話： 037-466333
Email: service@repairtw.com
Line id: @zzzz
www.repairtw.com

◆ Protecting Main Circuit Terminals

■ Insulation Cap

Use insulation caps when wiring the drive with crimp terminals. Take particular care to ensure that wiring does not touch neighboring terminals or the surrounding case.

■ Insulation Barrier

Insulation barriers are packaged with drive models CIMR-A□4A0414 through 0675 to provide added protection between terminals. Yaskawa recommends using the insulation barriers provided to ensure proper wiring. See ***Figure 3.20*** for instructions on where the insulation barriers should be placed.

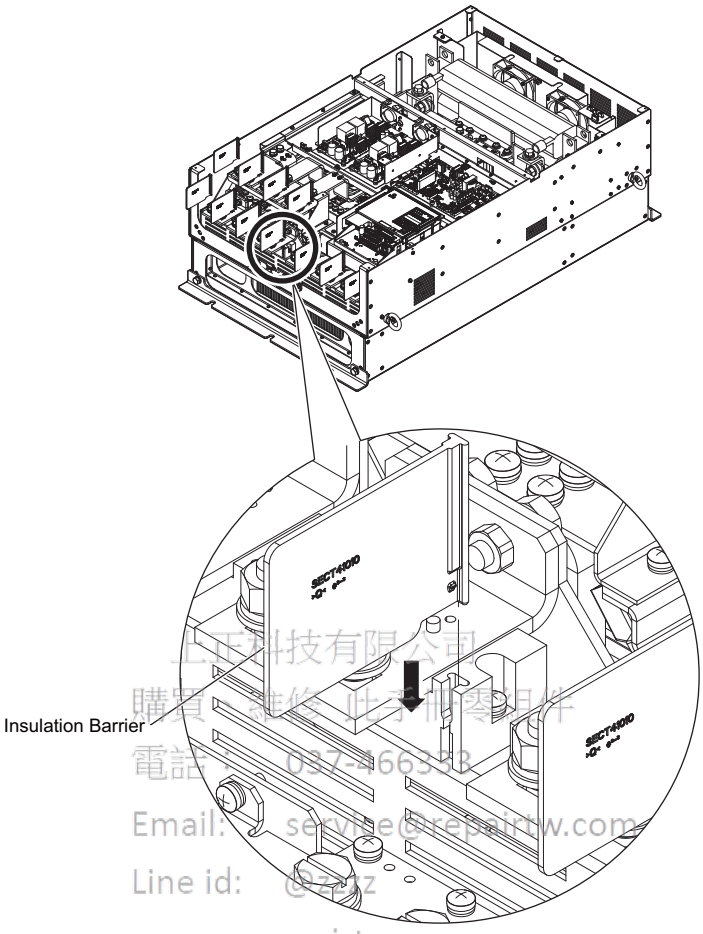

上正科技有限公司
購買、維修 此手冊零組件
電話： 037-466333
Email: service@repairtw.com
Line id: @zzzz
www.repairtw.com

Figure 3.20 Installing insulation barriers

◆ Wire Gauges and Tightening Torque

Select the appropriate wires and crimp terminals from through .

Note: **1.** Wire gauge recommendations based on drive continuous current ratings (ND) using 75°C 600 Vac vinyl-sheathed wire assuming ambient temperature within 40°C and wiring distance less than 100 m.

2. Terminals +1, +2, +3, –, B1 and B2 are for connecting optional devices such as a DC reactor or braking resistor. Do not connect other nonspecific devices to these terminals.

- Consider the amount of voltage drop when selecting wire gauges. Increase the wire gauge when the voltage drop is greater than 2% of motor rated voltage. Ensure the wire gauge is suitable for the terminal block. Use the following formula to calculate the amount of voltage drop:
  Line drop voltage (V) = $\sqrt{3}$ × wire resistance (Ω/km) × wire length (m) × current (A) × 10^{-3}
- Refer to instruction manual TOBPC72060000 for braking unit or braking resistor unit wire gauges.
- Use terminal +1 and the negative terminal when connecting a braking resistor, regenerative converter, or a regen unit.
- ***Refer to UL Standards Compliance on page 515*** for information on UL compliance.

■ Three-Phase 200 V Class

Table 3.2 Wire Gauge and Torque Specifications (Three-Phase 200 V Class)

Model CIMR-A□	Terminal	Recommended Gauge mm²	Applicable Gauge mm²	Screw Size	Tightening Torque N·m (lb.in.)
2A0004 2A0006 2A0010	R/L1, S/L2, T/L3	2.5	2.5 to 6	M4	1.2 to 1.5 (10.6 to 13.3)
	U/T1, V/T2, W/T3	2.5	2.5 to 6		
	–, +1, +2	–	2.5 to 6		
	B1, B2	–	2.5 to 6		
	⏚	2.5	2.5 to 6		
2A0012	R/L1, S/L2, T/L3	2.5	2.5 to 6	M4	1.2 to 1.5 (10.6 to 13.3)
	U/T1, V/T2, W/T3	2.5	2.5 to 6		
	–, +1, +2	–	2.5 to 6		
	B1, B2	–	2.5 to 6		
	⏚	2.5	2.5 to 6		
2A0021	R/L1, S/L2, T/L3	4	2.5 to 6	M4	1.2 to 1.5 (10.6 to 13.3)
	U/T1, V/T2, W/T3	2.5	2.5 to 6		
	–, +1, +2	–	4 to 6		
	B1, B2	–	2.5 to 6		
	⏚	4	4 to 6		
2A0030	R/L1, S/L2, T/L3	6	4 to 16	M4	1.2 to 1.5 (10.6 to 13.3)
	U/T1, V/T2, W/T3	6	4 to 16		
	–, +1, +2	–	6 to 16		
	B1, B2	–	4 to 6		
	⏚	6	6 to 10	M5	2 to 2.5 (17.7 to 22.1)
2A0040	R/L1, S/L2, T/L3	10	6 to 16	M4	1.2 to 1.5 (10.6 to 13.3)
	U/T1, V/T2, W/T3	10	6 to 16		
	–, +1, +2	–	16		
	B1, B2	–	4 to 6		
	⏚	10	6 to 10	M5	2 to 2.5 (17.7 to 22.1)
2A0056	R/L1, S/L2, T/L3	16	16 to 25	M6	4 to 6 (35.4 to 53.1)
	U/T1, V/T2, W/T3	16	16 to 25		
	–, +1, +2	–	16 to 25		
	B1, B2	–	6 to 10	M5	2 to 2.5 (17.7 to 22.1)
	⏚	16	10 to 16	M6	4 to 6 (35.4 to 53.1)
2A0069	R/L1, S/L2, T/L3	25	16 to 25	M8	9 to11 (79.7 to 97.4)
	U/T1, V/T2, W/T3	16	16 to 25		
	–, +1, +2	–	25		
	B1, B2	–	10 to 16	M5	2 to 2.5 (17.7 to 22.1)
	⏚	16	16 to 25	M6	4 to 6 (35.4 to 53.1)
2A0081	R/L1, S/L2, T/L3	35	25 to 35	M8	9 to11 (79.7 to 97.4)
	U/T1, V/T2, W/T3	25	25 to 35		
	–, +1, +2	–	25 to 35		
	B1, B2	–	16	M5	2 to 2.5 (17.7 to 22.1)
	⏚	16	16 to 25	M6	4 to 6 (35.4 to 53.1)
2A0110	R/L1, S/L2, T/L3	35	25 to 50	M8	9 to 11 (79.7 to 97.4)
	U/T1, V/T2, W/T3	35	25 to 50		
	–, +1	–	35 to 50		
	B1, B2	–	16 to 50		
	⏚	16	16 to 25		
2A0138	R/L1, S/L2, T/L3	50	35 to 70	M10	18 to 23 (159 to 204)
	U/T1, V/T2, W/T3	50	35 to 70		
	–, +1	–	50 to 70		
	B1, B2	–	25 to 70		
	⏚	25	25	M8	9 to 11 (79.7 to 97.4)

立正科技有限公司
購買、維修 此手冊零組件
電話： 037-466333
Email: service@repairtw.com
Line id: @zzzz
www.repairtw.com

Model CIMR-A□	Terminal	Recommended Gauge mm²	Applicable Gauge mm²	Screw Size	Tightening Torque N·m (lb.in.)
2A0169	R/L1, S/L2, T/L3	70	50 to 95	M10	18 to 23 (159 to 204)
	U/T1, V/T2, W/T3	70	50 to 95		
	–, +1	–	35 to 95		
	+3	–	50 to 95		
	⏚	35	25 to 35	M8	9 to 11 (79.7 to 97.4)
2A0211	R/L1, S/L2, T/L3	95	70 to 95	M10	18 to 23 (159 to 204)
	U/T1, V/T2, W/T3	95	70 to 95		
	–, +1	–	35 to 95		
	+3	–	50 to 95		
	⏚	50	25 to 50	M8	9 to 11 (79.7 to 97.4)
2A0250	R/L1, S/L2, T/L3	95 × 2P	95 to 150	M12	32 to 40 (283 to 354)
	U/T1, V/T2, W/T3	95 × 2P	95 to 150		
	–, +1	–	70 to 150		
	+3	–	35 to 150	M10	18 to 23 (159 to 204)
	⏚	95	95 to 150	M12	32 to 40 (283 to 354)
2A0312	R/L1, S/L2, T/L3	95 × 2P	95 to 150	M12	32 to 40 (283 to 354)
	U/T1, V/T2, W/T3	95 × 2P	95 to 150		
	–, +1	–	70 to 150		
	+3	–	70 to 150	M10	18 to 23 (159 to 204)
	⏚	95	95 to 150	M12	32 to 40 (283 to 354)
2A0360	R/L1, S/L2, T/L3	240	95 to 300	M12	32 to 40 (283 to 354)
	U/T1, V/T2, W/T3	240	95 to 300		
	–, +1	–	125 to 300		
	+3	–	70 to 300	M10	18 to 23 (159 to 204)
	⏚	120	120 to 240	M12	32 to 40 (283 to 354)
2A0415	R/L1, S/L2, T/L3	120 × 2P	95 to 300	M12	32 to 40 (283 to 354)
	U/T1, V/T2, W/T3	300	95 to 300		
	–, +1	–	150 to 300		
	+3	–	70 to 300	M10	18 to 23 (159 to 204)
	⏚	120	120 to 240	M12	32 to 40 (283 to 354)

上正科技有限公司
購買、維修 此手冊零組件
電話： 037-466333
Email: service@repairtw.com
Line id: @zzzz
www.repairtw.com

■ Three-Phase 400 V Class

Table 3.3 Wire Gauge and Torque Specifications (Three-Phase 400 V Class)

Model CIMR-A□	Terminal	Recommended Gauge mm²	Applicable Gauge mm²	Screw Size	Tightening Torque N·m (lb.in.)
4A0002 4A0004	R/L1, S/L2, T/L3	2.5	2.5 to 6	M4	1.2 to 1.5 (10.6 to 13.3)
	U/T1, V/T2, W/T3	2.5	2.5 to 6		
	–, +1, +2	–	2.5 to 6		
	B1, B2	–	2.5 to 6		
	⏚	2.5	2.5 to 4		
4A0005 4A0007 4A0009	R/L1, S/L2, T/L3	2.5	2.5 to 6	M4	1.2 to 1.5 (10.6 to 13.3)
	U/T1, V/T2, W/T3	2.5	2.5 to 6		
	–, +1, +2	–	2.5 to 6		
	B1, B2	–	2.5 to 6		
	⏚	2.5	2.5 to 6		
4A0011	R/L1, S/L2, T/L3	2.5	2.5 to 6	M4	1.2 to 1.5 (10.6 to 13.3)
	U/T1, V/T2, W/T3	2.5	2.5 to 6		
	–, +1, +2	–	2.5 to 6		
	B1, B2	–	2.5 to 6		
	⏚	2.5	2.5 to 6		

Model CIMR-A☐	Terminal	Recommended Gauge mm²	Applicable Gauge mm²	Screw Size	Tightening Torque N·m (lb.in.)
4A0018	R/L1, S/L2, T/L3	2.5	2.5 to 16	M4	1.2 to 1.5 (10.6 to 13.3)
	U/T1, V/T2, W/T3	2.5	2.5 to 16		
	–, +1, +2	–	4 to 16		
	B1, B2	–	4 to 6		
	⏚	2.5	2.5 to 6	M5	2 to 2.5 (17.7 to 22.1)
4A0023	R/L1, S/L2, T/L3	4	2.5 to 16	M4	1.2 to 1.5 (10.6 to 13.3)
	U/T1, V/T2, W/T3	4	2.5 to 16		
	–, +1, +2	–	4 to 16		
	B1, B2	–	4 to 6		
	⏚	4	4 to 6	M5	2 to 2.5 (17.7 to 22.1)
4A0031	R/L1, S/L2, T/L3	6	6 to 16	M5	2 to 2.5 (17.7 to 22.1)
	U/T1, V/T2, W/T3	6	6 to 16		
	–, +1, +2	–	6 to 16		
	B1, B2	–	6 to 10	M5	2 to 2.5 (17.7 to 22.1)
	⏚	6	6 to 10	M6	4 to 6 (35.4 to 53.1)
4A0038	R/L1, S/L2, T/L3	10	10 to 16	M5	2 to 2.5 (17.7 to 22.1)
	U/T1, V/T2, W/T3	6	6 to 16		
	–, +1, +2	–	6 to 16		
	B1, B2	–	6 to 10	M5	2 to 2.5 (17.7 to 22.1)
	⏚	10	6 to 16	M6	4 to 6 (35.4 to 53.1)
4A0044	R/L1, S/L2, T/L3	16	16 to 25	M6	4 to 6 (35.4 to 53.1)
	U/T1, V/T2, W/T3	16	16 to 25		
	–, +1, +2	–	16 to 25		
	B1, B2	–	6 to 10	M5	2 to 2.5 (17.7 to 22.1)
	⏚	16	10 to 16	M6	4 to 6 (35.4 to 53.1)
4A0058	R/L1, S/L2, T/L3	16	10 to 50	M8	9 to 11 (79.7 to 97.4)
	U/T1, V/T2, W/T3	16	10 to 50		
	–, +1	–	16 to 50		
	B1, B2		10 to 50		
	⏚	16	10 to 16		
4A0072	R/L1, S/L2, T/L3	16	16 to 50	M8	9 to 11 (79.7 to 97.4)
	U/T1, V/T2, W/T3	25	16 to 50		
	–, +1	–	25 to 50		
	B1, B2	–	16 to 50		
	⏚	16	16 to 25		
4A0088	R/L1, S/L2, T/L3	25	16 to 70	M8	9 to 11 (79.7 to 97.4)
	U/T1, V/T2, W/T3	25	25 to 70		
	–, +1	–	25 to 70		
	+3	–	16 to 70		
	⏚	16	16 to 25		
4A0103	R/L1, S/L2, T/L3	35	25 to 70	M8	9 to 11 (79.7 to 97.4)
	U/T1, V/T2, W/T3	35	25 to 70		
	–, +1	–	25 to 70		
	+3	–	25 to 70		
	⏚	16	16 to 25		
4A0139	R/L1, S/L2, T/L3	50	35 to 95	M10	18 to 23 (159 to 204)
	U/T1, V/T2, W/T3	50	35 to 95		
	–, +1	–	50 to 95		
	+3	–	25 to 95		
	⏚	25	25		
4A0165	R/L1, S/L2, T/L3	70	50 to 95	M10	18 to 23 (159 to 204)
	U/T1, V/T2, W/T3	70	70 to 95		
	–,+1	–	35 to 95		
	+3	–	50 to 95		
	⏚	35	25 to 35		

立正科技有限公司
購買、維修 此手冊零組件
電話： 037-466333
Email: service@repairtw.com
Line id: @zzzz
www.repairtw.com

Model CIMR-A□	Terminal	Recommended Gauge mm²	Applicable Gauge mm²	Screw Size	Tightening Torque N·m (lb.in.)
4A0208	R/L1, S/L2, T/L3	95	35 to 95	M10	18 to 23 (159 to 204)
	U/T1, V/T2, W/T3	95	35 to 95		
	–, +1	–	35 to 150		
	+3	–	25 to 70		
	⏚	50	50 to 150		
4A0250	R/L1, S/L2, T/L3	120	95 to 300	M10	18 to 23 (159 to 204)
	U/T1, V/T2, W/T3	120	95 to 300		
	–, +1	–	70 to 300		
	+3	–	35 to 300		
	⏚	70	70 to 240		
4A0296	R/L1, S/L2, T/L3	185	95 to 300	M12	32 to 40 (283 to 354)
	U/T1, V/T2, W/T3	185	95 to 300		
	–, +1	–	70 to 300		
	+3	–	35 to 300	M10	18 to 23 (159 to 204)
	⏚	95	95 to 240	M12	32 to 40 (283 to 354)
4A0362	R/L1, S/L2, T/L3	240	95 to 300	M12	32 to 40 (283 to 354)
	U/T1, V/T2, W/T3	240	95 to 300		
	–, +1	–	95 to 300		
	+3	–	70 to 300	M10	18 to 23 (159 to 204)
	⏚	120	120 to 240	M12	32 to 40 (283 to 354)
4A0414	R/L1, S/L2, T/L3	95 × 2P	95 to 150	M12	32 to 40 (283 to 354)
	U/T1, V/T2, W/T3	95 × 2P	95 to 150		
	–, +1	–	70 to 150		
	+3	–	70 to 150		
	⏚	95	35 to 95		
4A0515	R/L1, S/L2, T/L3	120 × 2P	95 to 150	M12	32 to 40 (283 to 354)
	U/T1, V/T2, W/T3	150 × 2P	95 to 150		
	–, +1	–	70 to 150		
	+3	–	70 to 150		
	⏚	150	50 to 150		
4A0675	R/L1, S/L2, T/L3	95 × 4P	95 to 150	M12	32 to 40 (283 to 354)
	U/T1, V/T2, W/T3	95 × 4P	95 to 150		
	–, +1	–	70 to 150		
	+3	–	70 to 150		
	⏚	95 × 2P	60 to 150		

上正科技有限公司
購買、維修 此手冊零組件
電話： 037-466333
Email: service@repairtw.com
Line id: @zzzz
www.repairtw.com

◆ Main Circuit Terminal and Motor Wiring

This section outlines the various steps, precautions, and checkpoints for wiring the main circuit terminals and motor terminals.

NOTICE: *When connecting the motor to the drive output terminals U/T1, V/T2, and W/T3, the phase order for the drive and motor should match. Failure to comply with proper wiring practices may cause the motor to run in reverse if the phase order is backward.*

NOTICE: *Do not connect phase-advancing capacitors or LC/RC noise filters to the output circuits. Failure to comply could result in damage to the drive, phase-advancing capacitors, LC/RC noise filters or ground fault circuit interrupters.*

NOTICE: *Do not connect the AC power line to the output motor terminals of the drive. Failure to comply could result in death or serious injury by fire as a result of drive damage from line voltage application to output terminals.*

■ Cable Length Between Drive and Motor

Voltage drop along the motor cable may cause reduced motor torque when the wiring between the drive and the motor is too long, especially at low frequency output. This can also be a problem when motors are connected in parallel with a

fairly long motor cable. Drive output current will increase as the leakage current from the cable increases. An increase in leakage current may trigger an overcurrent situation and weaken the accuracy of the current detection.

Adjust the drive carrier frequency according to ***Table 3.4***. If the motor wiring distance exceeds 100 m because of the system configuration, reduce the ground currents. ***Refer to C6-02: Carrier Frequency Selection on page 177***.

Table 3.4 Cable Length Between Drive and Motor

Cable Length	50 m or less	100 m or less	Greater than 100 m
Carrier Frequency	15 kHz or less	5 kHz or less	2 kHz or less

Note: When setting carrier frequency in a drive running multiple motors, calculate the cable length as the total distance of wiring to all motors that are connected.

■ Ground Wiring

Follow the precautions to wire the ground for one drive or a series of drives.

WARNING! *Electrical Shock Hazard. Always use a ground wire that complies with technical standards on electrical equipment and minimize the length of the ground wire. Improper equipment grounding may cause dangerous electrical potentials on equipment chassis, which could result in death or serious injury.*

WARNING! *Electrical Shock Hazard. Be sure to ground the drive ground terminal. Improper equipment grounding could result in death or serious injury by contacting ungrounded electrical equipment.*

NOTICE: *Do not share the ground wire with other devices such as welding machines or large-current electrical equipment. Improper equipment grounding could result in drive or equipment malfunction due to electrical interference.*

NOTICE: *When using more than one drive, ground multiple drives according to instructions. Improper equipment grounding could result in abnormal operation of drive or equipment.*

Refer to ***Figure 3.21*** when using multiple drives. Do not loop the ground wire.

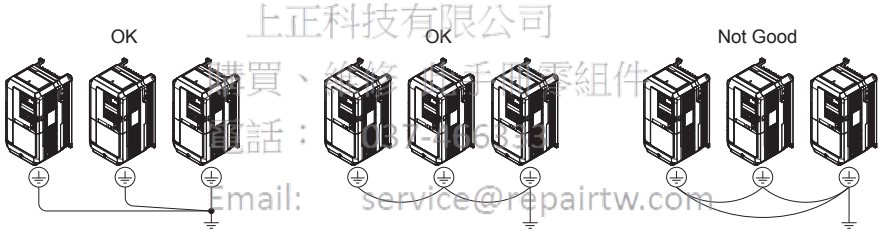

上正科技有限公司
購買、維修 必手 零組件
電話： 0817-4663
Email: service@repairtw.com
Line id: @zzzz
www.repairtw.com

Figure 3.21 Multiple Drive Wiring

■ Wiring the Main Circuit Terminal

WARNING! *Electrical Shock Hazard. Shut off the power supply to the drive before wiring the main circuit terminals. Failure to comply may result in death or serious injury.*

Wire the main circuit terminals after the terminal board has been properly grounded.

Models CIMR-A☐2A0004 through 0081 and 4A0002 through 0044 have a cover placed over the DC bus and braking circuit terminals prior to shipment to help prevent miswiring. Cut away covers as needed for terminals using wire cutters.

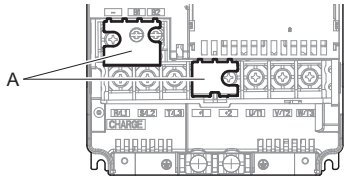

A – Protecting Cover

Figure 3.22 Protecting Cover to Prevent Miswiring (CIMR-A☐2A0056)

■ Main Circuit Connection Diagram

Refer to Main Circuit Connection Diagram on page 56 when wiring terminals on the drive's main power circuit.

WARNING! *Fire Hazard. The braking resistor connection terminals are B1 and B2. Do not connect braking resistors to any other terminals. Improper wiring connections could cause the braking resistor to overheat and cause death or serious injury by fire. Failure to comply may result in damage to the braking circuit or drive.*

3.9 Control Circuit Wiring

◆ Control Circuit Connection Diagram

Refer to Standard Connection Diagram on page 54 when wiring terminals on the drive's control circuit.

◆ Control Circuit Terminal Block Functions

Drive parameters determine which functions apply to the multi-function digital inputs (S1 to S8), multi-function digital outputs (M1 to M6), multi-function analog inputs (A1 to A3), and multi-function analog monitor output (FM, AM). The default setting is listed next to each terminal in *Figure 3.1* on page *54*.

WARNING! *Sudden Movement Hazard. Always check the operation and wiring of control circuits after being wired. Operating a drive with untested control circuits could result in death or serious injury.*

WARNING! *Confirm the drive I/O signals and external sequence before starting test run. Setting parameter A1-06 may change the I/O terminal function automatically from the factory setting. Refer to Application Selection on page 103. Failure to comply may result in death or serious injury.*

■ Input Terminals

Table 3.5 lists the input terminals on the drive. Text in parenthesis indicates the default setting for each multi-function input.

Table 3.5 Control Circuit Input Terminals

Type	No.	Terminal Name (Function)	Function (Signal Level) Default Setting	Page
Multi-Function Digital Inputs	S1	Multi-function input 1 (Closed: Forward run, Open: Stop)	Photocoupler 24 Vdc, 8 mA Set the S3 jumper to select between sinking, sourcing mode, and the power supply. Refer to *Sinking/Sourcing Mode Switch for Digital Inputs on page 77*.	*423*
	S2	Multi-function input 2 (Closed: Reverse run, Open: Stop)		
	S3	Multi-function input 3 (External fault, N.O.)		
	S4	Multi-function input 4 (Fault reset)		
	S5	Multi-function input 5 (Multi-step speed reference 1)		
	S6	Multi-function input 6 (Multi-step speed reference 2)		
	S7	Multi-function input 7 (Jog reference)		
	S8	Multi-function input 8 (External baseblock)		
	SC	Multi-function input common	Multi-function input common	
	SP	Digital input power supply +24 Vdc	24 Vdc power supply for digital inputs, 150 mA max (if no digital input option DI-A3 is used only) Never short terminals SP and SN as doing so will damage the drive.	*77*
	SN	Digital input power supply 0 V		
Safe Disable Inputs	H1	Safe Disable input 1	24 Vdc, 8 mA One or both open: Output disabled Both closed: Normal operation Internal impedance: 3.3 kΩ Off time of at least 1 ms Disconnect the wire jumpers shorting terminals H1, H2, and HC to use the Safe Disable inputs. Set the S5 jumper to select between sinking, sourcing mode, and the power supply as explained in *Sinking/Sourcing Mode Selection for Safe Disable Inputs on page 77*.	*518*
	H2	Safe Disable input 2		
	HC	Safe Disable function common	Safe disable function common	
Analog Inputs / Pulse Train Input	RP	Multi-function pulse train input (Frequency reference)	Input frequency range: 0 to 32 kHz Signal Duty Cycle: 30 to 70% High level: 3.5 to 13.2 Vdc, low level: 0.0 to 0.8 Vdc Input impedance: 3 kΩ	*137* 241
	+V	Power supply for analog inputs	10.5 Vdc (max allowable current 20 mA)	*136*
	-V	Power supply for analog inputs	-10.5 Vdc (max allowable current 20 mA)	–
	A1	Multi-function analog input 1 (Frequency reference bias)	-10 to 10 Vdc, 0 to 10 Vdc (input impedance: 20 kΩ)	*136* 234
	A2	Multi-function analog input 2 (Frequency reference bias)	-10 to 10 Vdc, 0 to 10 Vdc (input impedance: 20 kΩ) 4 to 20 mA, 0 to 20 mA (input impedance: 250 Ω) Voltage or current input must be selected by DIP switch S1 and H3-09	*136* *137* 236
	A3	Multi-function analog input 3 (auxiliary frequency reference) / PTC Input	-10 to 10 Vdc, 0 to 10 Vdc (input impedance: 20 kΩ) Use DIP switch S4 on the terminal board to selection between analog or PTC input.	*136*
	AC	Frequency reference common	0 V	*136*
	E (G)	Ground for shielded lines and option cards	–	–

上正科技有限公司
購買、維修 此手冊零組件
電話： 037-466555
Email: service@repairtw.com
Line id: @zzzz
www.repairtw.com

■ Output Terminals

Table 3.6 lists the output terminals on the drive. Text in parenthesis indicates the default setting for each multi-function output.

Table 3.6 Control Circuit Output Terminals

Type	No.	Terminal Name (Function)	Function (Signal Level) Default Setting	Page
Fault Relay	MA	N.O.	30 Vdc, 10 mA to 1 A; 250 Vac, 10 mA to 1 A Minimum load: 5 Vdc, 10 mA	224
	MB	N.C. output		
	MC	Fault output common		
Multi-Function Digital Output <1>	M1	Multi-function digital output (During run)	30 Vdc, 10 mA to 1 A; 250 Vac, 10 mA to 1 A Minimum load: 5 Vdc, 10 mA	224
	M2			
	M3	Multi-function digital output (Zero Speed)		
	M4			
	M5	Multi-function digital output (Speed Agree 1)		
	M6			
Monitor Output	MP	Pulse train output (Output frequency)	32 kHz (max)	241
	FM	Analog monitor output 1 (Output frequency)	-10 to +10 Vdc, 0 to +10 Vdc, or 4-20 mA Use jumper S5 on the terminal board to select between voltage or current output signals.	239
	AM	Analog monitor output 2 (Output current)		
	AC	Monitor common	0 V	–
Safety Monitor Output	DM+	Safety monitor output	Outputs status of Safe Disable function. Closed when both Safe Disable channels are closed. Up to +48 Vdc 50 mA	*509*
	DM-	Safety monitor output common		

<1> Refrain from assigning functions to digital outputs that involve frequent switching, as doing so may shorten relay performance life. Switching life is estimated at 200,000 times (assumes 1 A, resistive load).

■ Serial Communication Terminals

Table 3.7 Control Circuit Terminals: Serial Communications

Type	No.	Signal Name	Function (Signal Level)	
MEMOBUS/Modbus Communication <1>	R+	Communications input (+)	MEMOBUS/Modbus communication: Use a RS-485 or RS-422 cable to connect the drive.	RS-485/422 MEMOBUS/Modbus communication protocol 115.2 kbps (max.)
	R-	Communications input (-)		
	S+	Communications output (+)		
	S-	Communications output (-)		
	IG	Shield ground	0 V	

<1> Enable the termination resistor in the last drive in a MEMOBUS network by setting DIP switch S2 to the ON position. For more information on the termination resistor, see *Control I/O Connections on page 77*.

上正科技有限公司
維修 此手冊零組件
電話： 037-466333
Email: service@repairtw.com
Line id: @zzzz
www.repairtw.com

◆ Terminal Configuration

Control circuit terminals should are arranged as shown in *Figure 3.23*.

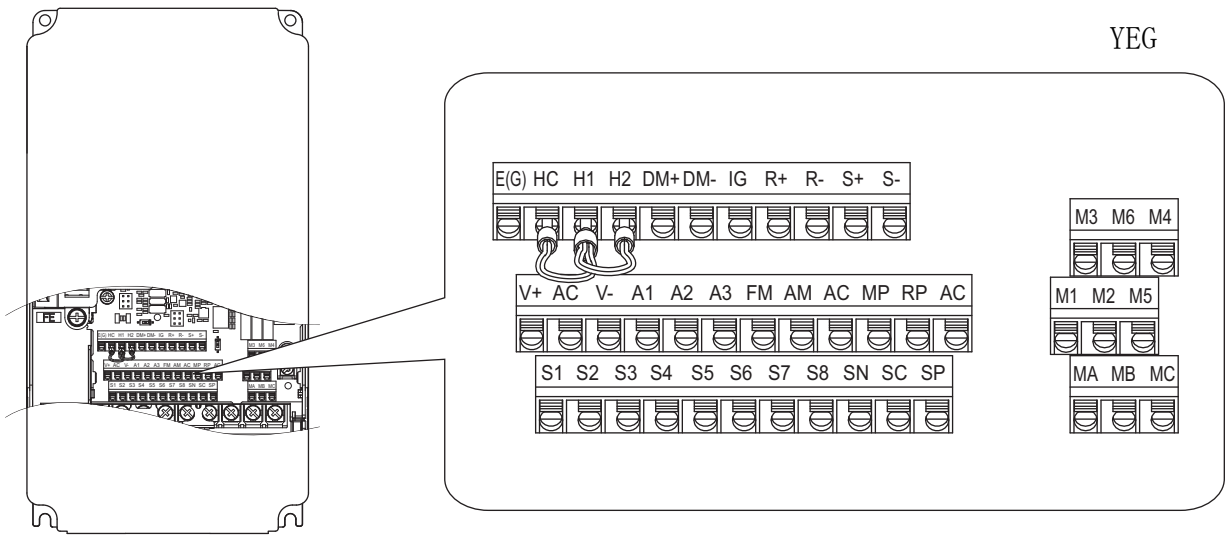

Figure 3.23 Control Circuit Terminal Arrangement

■ Wire Size

Select appropriate wire type and gauges from ***Table 3.8***. For simpler and more reliable wiring, use crimp ferrules on the wire ends. Refer to ***Table 3.9*** for ferrule terminal types and sizes.

Table 3.8 Wire Gauges

Terminal	Bare Wire Terminal		Ferrule-Type Terminal		Wire Type
	Applicable wire size mm² (AWG)	Recommended wire size mm² (AWG)	Applicable wire size mm² (AWG)	Recommended wire size mm² (AWG)	
S1-S8, SC, SP, SN, RP, +V, -V, A1, A2, A3, AC, M1-M6, MA, MB, MC, MP, AM, FM, AC, S+, S-, R+, R-, IG, HC, H1, H2, DM+, DM-	Stranded wire: 0.2 to 1.0 (24 to 16) Solid wire: 0.2 to 1.5 (24 to 16)	0.75 (18)	0.25 to 0.5 (24 to 20)	0.5 (20)	Shielded line, etc.

■ Ferrule-Type Wire Terminals

Prepare wire ends with insulated sleeves before connecting to the drive. See ***Table 3.9*** for dimensions. Yaskawa recommends CRIMPFOX ZA-3, a crimping tool manufactured by PHOENIX CONTACT.

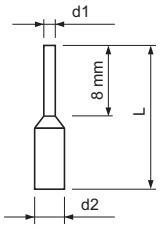

Figure 3.24 Ferrule Dimensions

Table 3.9 Ferrule Terminal Types and Sizes

Size mm² (AWG)	Type	L (mm)	d1 (mm)	d2 (mm)	Manufacturer
0.25 (24)	AI 0.25-8YE	12.5	0.8	1.8	PHOENIX CONTACT
0.34 (22)	AI 0.34-8TQ	10.5	0.8	1.8	
0.5 (20)	AI 0.5-8WH or AI 0.5-8OG	14	1.1	2.5	

上正科技有限公司
購買、維修 此手冊零組件
電話： 037-466333
Email: service@repairtw.com
Line id: @zzzz
www.repairtw.com

◆ Wiring the Control Circuit Terminal

This section describes the proper procedures and preparations for wiring the control terminals.

WARNING! *Electrical Shock Hazard. Do not remove covers or touch the circuit boards while the power is on. Failure to comply could result in death or serious injury.*

NOTICE: *Separate control circuit wiring from main circuit wiring (terminals R/L1, S/L2, T/L3, B1, B2, U/T1, V/T2, W/T3, -, +1, +2) and other high-power lines. Improper wiring practices could result in drive malfunction due to electrical interference.*

NOTICE: *Separate wiring for digital output terminals MA, MB, MC and M1 to M6 from wiring to other control circuit lines. Improper wiring practices could result in drive or equipment malfunction or nuisance trips.*

NOTICE: *Use a class 2 power supply (UL standard) when connecting to the control terminals. Improper application of peripheral devices could result in drive performance degradation due to improper power supply.*

NOTICE: *Insulate shields with tape or shrink tubing to prevent contact with other signal lines and equipment. Improper wiring practices could result in drive or equipment malfunction due to short circuit.*

NOTICE: *Connect the shield of shielded cable to the appropriate ground terminal. Improper equipment grounding could result in drive or equipment malfunction or nuisance trips.*

Wire the control circuit only after terminals have been properly grounded and main circuit wiring is complete. Refer to ***Figure 3.25*** and ***Figure 3.26*** for details. Prepare the ends of the control circuit wiring as shown in ***Figure 3.27***. Refer to ***Wire Size on page 74***.

NOTICE: *Use shielded twisted-pair cables as indicated to prevent operating faults. Improper wiring practices could result in drive or equipment malfunction due to electrical interference.*

Connect control wires as shown in the following figure:

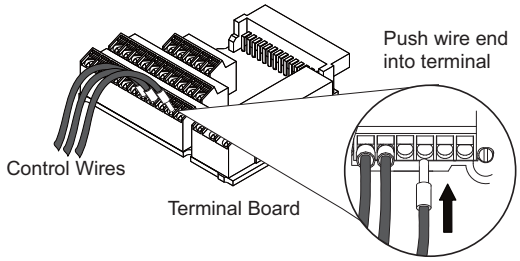

Figure 3.25 Terminal Board Wiring Guide

To disconnect control wires from the terminals use the procedure described in ***Figure 3.26***. Grasp the wire where it enters the terminal with a pair of pliers, then use a straight-edge screw driver to release the terminal and pull the wire out. If it fits tightly, e.g. if ferrules are used, turn the wire for about 45° and then pull it gently out. Use this procedure to remove the wire jumper between terminals HC, H1 and H2 that is preinstalled at shipping.

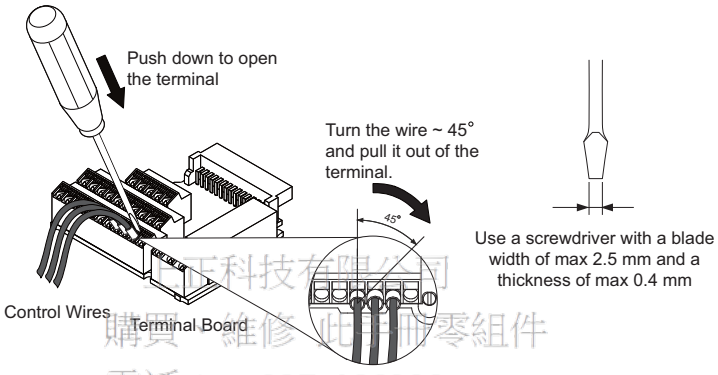

Figure 3.26 Removing Wires from the Terminal Board

When setting the frequency by analog reference from an external potentiometer, use shielded twisted-pair wires (treating wire ends as shown in ***Figure 3.27*** and connect the shield to the ground terminal of the drive.

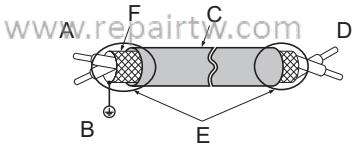

A – Drive side
B – Connect shield to ground terminal of drive.
C – Insulation
D – Control device side
E – Shield sheath (insulate with tape)
F – Shield

Figure 3.27 Preparing the Ends of Shielded Cables

NOTICE: *The signal lines between the drive and the operator station or peripheral equipment should not exceed 50 meters when using an analog signal from a remote source to supply the frequency reference. Failure to comply could result in poor system performance.*

◆ Switches and Jumpers on the Terminal Board

The terminal board is equipped with several switches used to adapt the drive I/Os to the external control signals. *Figure 3.28* shows the location of these switches. Refer to *Control I/O Connections on page 77* for setting instructions.

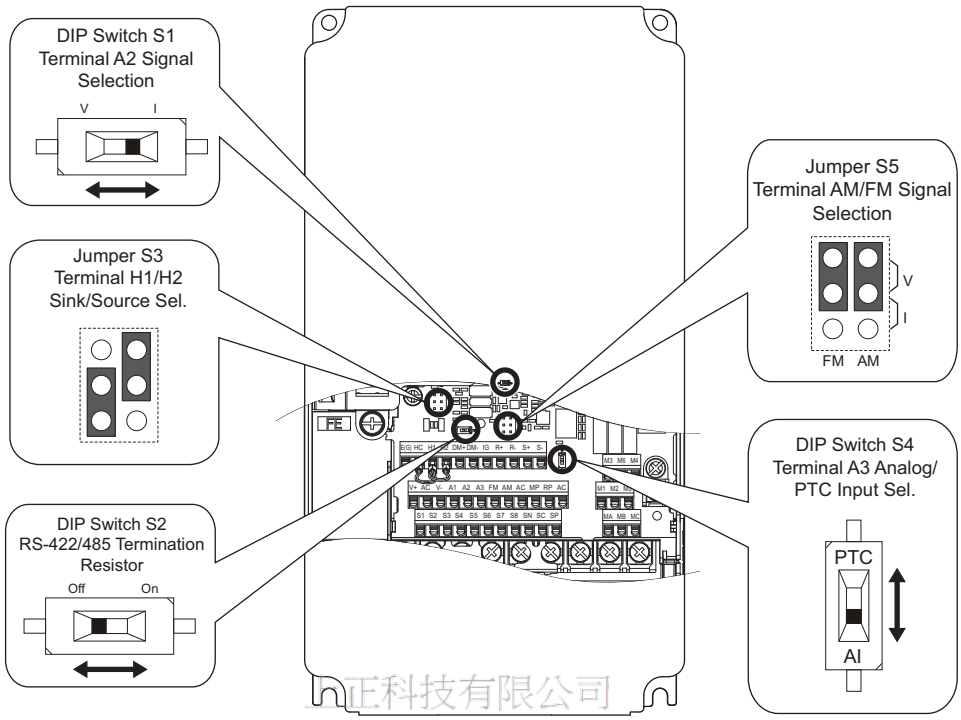

Figure 3.28 Locations of Jumpers and Switches on the Terminal Board

正科技有限公司
購買，維修 此手冊零組件
電話： 037-466333
Email: service@repairtw.com
Line id: @zzzz
www.repairtw.com

3.10 Control I/O Connections

◆ Sinking/Sourcing Mode Switch for Digital Inputs

Use the wire link between terminals SC and SP or SC and SN to select between Sink mode, Source mode or external power supply for the digital inputs S1 to S8 as shown in ***Table 3.10*** (Default: Sink mode, internal power supply).

Note: Never short terminals SP and SN as doing so will damage the drive.

Table 3.10 Digital Input Sink / Source / External Power Supply Selection

	Drive Internal Power Supply (Terminal SN and SP)	External 24 Vdc Power Supply
Sinking Mode (NPN)	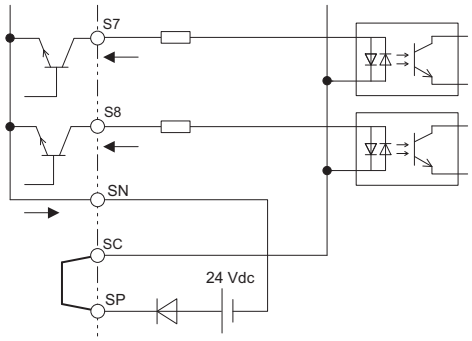	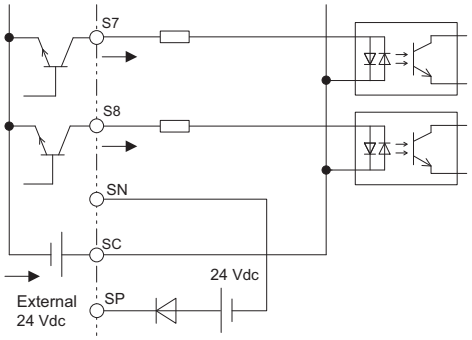
Sourcing Mode (PNP)	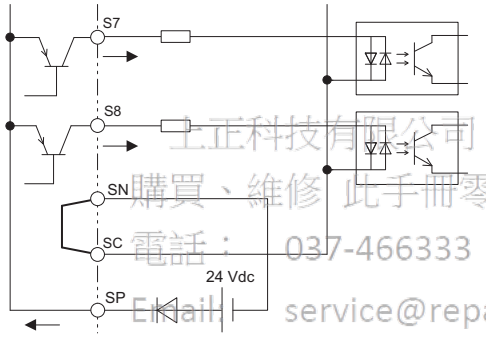	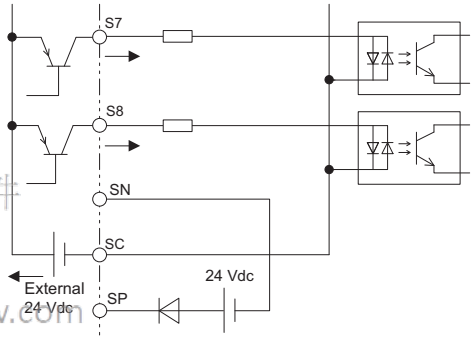

上正科技有限公司
購買、維修 此手冊零組件
電話： 037-466333
Email service@repairtw.com
Line id: @zzzz
www.repairtw.com

◆ Sinking/Sourcing Mode Selection for Safe Disable Inputs

Use jumper S3 on the terminal board to select between Sink mode, Source mode or external power supply for the Safe Disable inputs H1 and H2 as shown in ***Table 3.10*** (Default: Source mode, internal power supply.) Refer to ***Switches and Jumpers on the Terminal Board on page 76*** for locating jumper S3.

Table 3.11 Safe Disable Input Sink / Source / External Power Supply Selection

	Drive Internal Power Supply	External 24 Vdc Power Supply
Sinking Mode	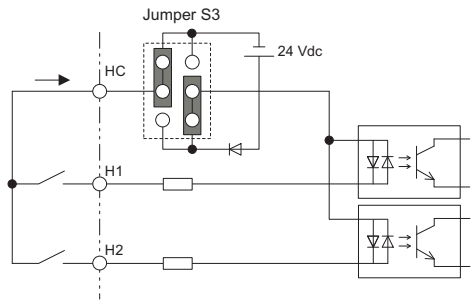	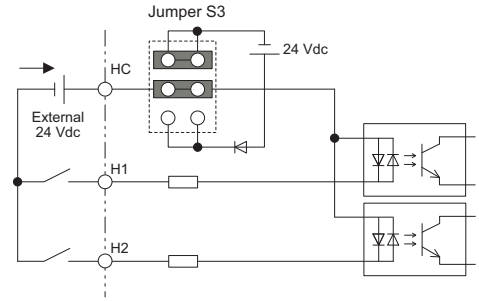

	Drive Internal Power Supply	External 24 Vdc Power Supply
Sourcing Mode	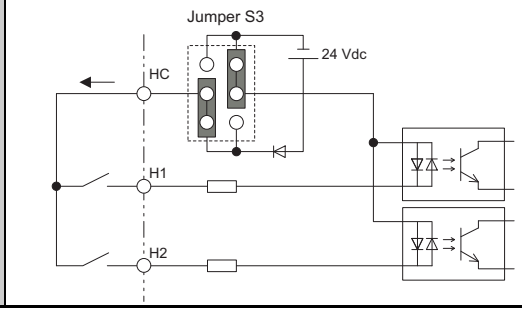	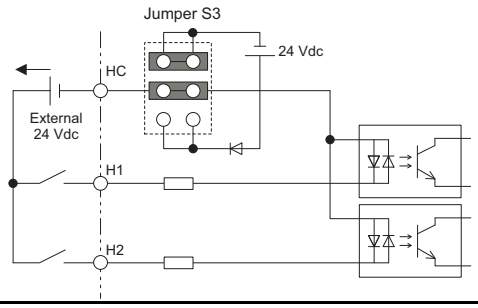

◆ Using the Pulse Train Output

The pulse train output terminal MP can either supply power but can also be used with external power supply. Peripheral devices should be connected in accordance with the specifications listed below. Failure to do so can cause unexpected drive operation, and can damage the drive or connected circuits.

■ Using Power from the Pulse Output Terminal (Source Mode)

The high voltage level of the pulse output terminal depends on the load impedance.

Load Impedance R_L (kΩ)	Output Voltage V_{MP} (V) (insulated)
1.5 kΩ	5 V
4 kΩ	8 V
10 kΩ	10 V

Note: The load resistance needed in order to get a certain high level voltage V_{MP} can be calculated by: $R_L = V_{MP} \cdot 2 / (12 - V_{MP})$

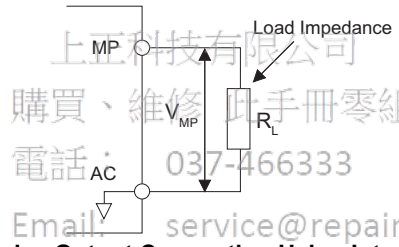

上正科技有限公司
購買、維修耗手冊零組件
電話： 037-466333
Email: service@repairtw.com
Line id: @zzzz
www.repairtw.com

Figure 3.29 Pulse Output Connection Using Internal Voltage Supply

■ Using External Power Supply (Sink Mode)

The high voltage level of the pulse output signal depends on the external voltage applied. The voltage must be between 12 and 15 Vdc. The load resistance must be adjusted so that the current is lower than 16 mA.

External Power Supply (V)	Load Impedance (kΩ)
12 to 15 Vdc ±10%	1.0 kΩ or higher

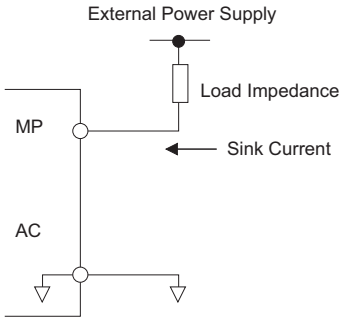

Figure 3.30 Pulse Output Connection Using External Voltage Supply

◆ Terminal A2 Input Signal Selection

Terminal A2 can be used to input either a voltage or a current signal. Select the signal type using switch S1 as explained in ***Table 3.12***. Set parameter H3-09 accordingly as shown in ***Table 3.13***. Refer to ***Switches and Jumpers on the Terminal Board on page 76*** for locating switch S1.

Note: If terminals A1 and A2 are both set for frequency bias (H3-02 = 0 and H3-10 = 0), both input values will be combined to create the frequency reference.

Table 3.12 DIP Switch S1 Settings

Setting	Description
V (left position)	Voltage input (-10 to +10 V)
I (right position) (default)	Current input (4 to 20 mA or 0 to 20 mA): default setting

Table 3.13 Parameter H3-09 Details

No.	Parameter Name	Description	Setting Range	Default Setting
H3-09	Terminal A2 signal level selection	Selects the signal level for terminal A2. 0: 0 to 10 Vdc 1: -10 to 10 Vdc 2: 4 to 20 mA 3: 0 to 20 mA	0 to 3	2

◆ Terminal A3 Analog/PTC Input Selection

Terminal A3 can be configured either as multi-function analog input or as PTC input for motor thermal overload protection. Use switch S4 to select the input function as described in ***Table 3.14***. Refer to ***Switches and Jumpers on the Terminal Board on page 76*** for locating switch S4.

上正科技有限公司
購買、維修 此手冊零組件
電話： 037-466333
Email: service@repairtw.com
Line id: @zzzz
www.repairtw.com

Table 3.14 DIP Switch S4 Settings

Setting	Description
AI (lower position) (default)	Analog input for the function selected in parameter H3-06
PTC (upper position)	PTC input. Parameter H3-06 must be set to E (PTC input)

◆ Terminal AM/FM Signal Selection

The signal type for terminals AM and FM can be set to either voltage or current output using jumper S5 on the terminal board as explained in ***Table 3.15***. When changing the setting of jumper S5, parameters H4-07 and H4-08 must be set accordingly. The default selection is voltage output for both terminals. Refer to ***Switches and Jumpers on the Terminal Board on page 76*** for locating jumper S5.

Table 3.15 Jumper S5 Settings

	Voltage Output	Current Output
Terminal AM	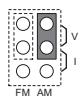	
Terminal FM	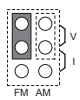	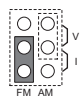

Table 3.16 Parameter H4-07, H4-08 Details

No.	Parameter Name	Description	Setting Range	Default Setting
H4-07	Terminal AM signal level selection	0: 0 to 10 Vdc 1: -10 to 10 Vdc 2: 4 to 20 mA	0 to 2	0
H4-08	Terminal FM signal level selection			

◆ MEMOBUS/Modbus Termination

This drive is equipped with a built in termination resistor for the RS-422/485 communication port. DIP switch S2 enables or disabled the termination resistor as shown in *Table 3.17*. The OFF position is the default. The termination resistor should be placed to the ON position when the drive is the last in a series of slave drives. Refer to *Switches and Jumpers on the Terminal Board on page 76* for locating switch S2.

Table 3.17 MEMOBUS/Modbus Switch Settings

S2 Position	Description
ON	Internal termination resistor ON
OFF	Internal termination resistor OFF (default setting)

Note: Refer to *MEMOBUS/Modbus Communications on page 477* for details on MEMOBUS/Modbus.

上正科技有限公司
購買、維修 此手冊零組件
電話： 037-466333
Email: service@repairtw.com
Line id: @zzzz
www.repairtw.com

3.11 Connect to a PC

This drive is equipped with a USB port (type-B).

The drive can connect to the USB port of a PC using a USB 2.0, AB type cable (sold separately). DriveWizard Plus can then be used to monitor drive performance and manage parameter settings. Contact Yaskawa for more information on DriveWizard Plus.

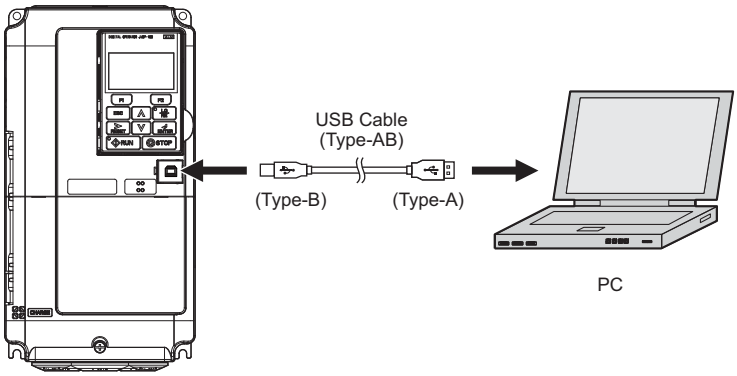

Figure 3.31 Connecting to a PC (USB)

上正科技有限公司
購買、維修 此手冊零組件
電話： 037-466333
Email: service@repairtw.com
Line id: @zzzz
www.repairtw.com

3.12 External Interlock

Systems that may be affected if the drive faults out should be interlocked with the drive's fault output and ready signal.

◆ Drive Ready

When the "Drive ready" signal has been set to one of the multi-function contact outputs, that output will close whenever the drive is ready to accept a Run command or is already running. Under the following conditions the Drive ready signal will switch off and remain off, even if a Run command is entered:

- when the power supply is shut off.
- during a fault.
- when there is problem with the control power supply.
- when a parameter setting error makes the drive unable to run even if a Run command has been entered.
- when a fault such as overvoltage or undervoltage is triggered as soon as the Run command is entered.
- when the drive is in the Programming mode and will not accept a Run command even when entered.

■ Interlock Circuit Example

Two drives running a single application might interlock with the controller using the Drive ready and Fault output signals as shown below. The figure illustrates how the application would not be able to run if either drive experiences a fault or is unable to supply a Drive ready signal.

Terminal	Output Signal	Parameter Setting
MA, MB, MC	Fault	–
M1-M2	Drive Ready	H2-01 = 06

上正科技有限公司
購買、維修此手冊零組件
電話： 037-466333
Email: service@repairtw.com
Line id: @zzzz
www.repairtw.com

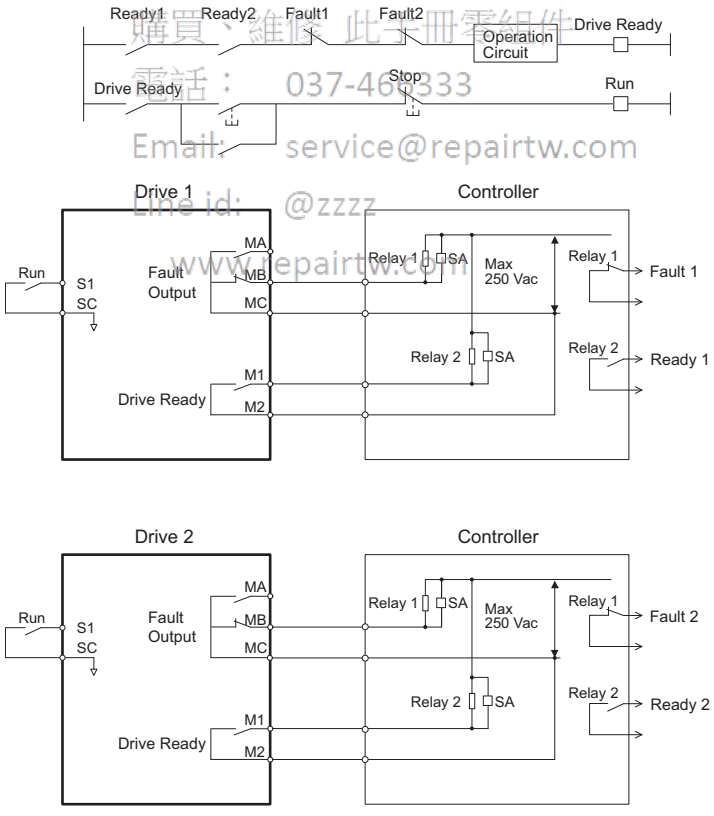

Figure 3.32 Interlock Circuit Example

3.13 Wiring Checklist

☑	No.	Item	Page
		Drive, peripherals, option cards	
☐	1	Check drive model number to ensure receipt of correct model.	*31*
☐	2	Make sure you have the correct braking resistors, DC reactors, noise filters, and other peripheral devices.	*375*
☐	3	Check the option card model number.	*375*
		Installation area and physical setup	
☐	4	Ensure that the area surrounding the drive complies with specifications.	*40*
		Power supply voltage, output voltage	
☐	5	The voltage from the power supply should be within the input voltage specification range of the drive.	*194*
☐	6	The voltage rating for the motor should match the drive output specifications.	*29* *444*
☐	7	Verify that the drive is properly sized to run the motor.	*29* *444*
		Main circuit wiring	
☐	8	Confirm proper branch circuit protection as specified by national and local codes.	*54*
☐	9	Properly wire the power supply to drive terminals R/L1, S/L2, and T/L3.	*56*
☐	10	Properly wire the drive and motor together. The motor lines and drive output terminals R/T1, V/T2, and W/T3 should match in order to produce the desired phase order. If the phase order is incorrect, the drive will rotate in the opposite direction.	*70*
☐	11	Use 600 Vac vinyl-sheathed wire for the power supply and motor lines.	*66*
☐	12	Use the correct wire gauges for the main circuit. *Refer to Wire Gauges and Tightening Torque on page 66.* • When using comparatively long motor cable, calculate the amount of voltage drop. Motor rated voltage (V) x 0.02 ≥ √3 x wire resistance (Ω/km) x cable length (m) x motor rated current (A) x 10^{-3} • If the cable between the drive and motor exceeds 50 m, adjust the carrier frequency set to C6-02 accordingly.	*66* *66* *71*
☐	13	Properly ground the drive. Review page *71*.	*71*
☐	14	Tightly fasten all terminal screws (control circuit terminals, grounding terminals). *Refer to Wire Gauges and Tightening Torque on page 66.*	*66*
☐	15	Set up overload protection circuits when running multiple motors from a single drive. 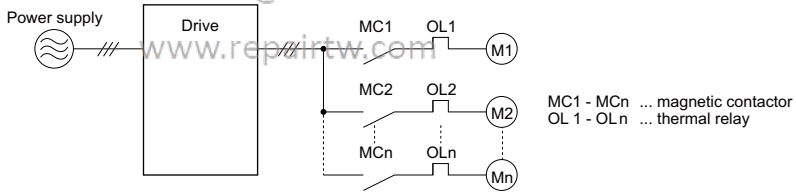 **Note:** Close MC1 through MCn before operating the drive (MC1 through MCn cannot be switched off during run).	–
☐	16	If using a dynamic braking option, install a magnetic contactor. Properly install the resistor, and ensure that overload protection shuts off the power supply.	*379*
☐	17	Verify phase advancing capacitors, input noise filters, or ground fault circuit interrupters are NOT installed on the output side of the drive.	–
		Control circuit wiring	
☐	18	Use twisted-pair line for all drive control circuit wiring.	*72*
☐	19	Ground the shields of shielded wiring to the GND ⏚ terminal.	*74*
☐	20	If using a 3-wire sequence, properly set parameters for multi-function contact input terminals S1 through S8, and properly wire control circuits.	–
☐	21	Properly wire any option cards.	*74*
☐	22	Check for any other wiring mistakes. Only use a multimeter to check wiring.	–
☐	23	Properly fasten the control circuit terminal screws in the drive. *Refer to Wire Gauges and Tightening Torque on page 66.*	*66*
☐	24	Pick up all wire clippings.	–
☐	25	Ensure that no frayed wires on the terminal block are touching other terminals or connections.	–
☐	26	Properly separate control circuit wiring and main circuit wiring.	–
☐	27	Analog signal line wiring should not exceed 50 m.	–
☐	28	Safe Disable input wiring should not exceed 30 m.	–

上正科技有限公司 購買、維修此手冊零組件 電話： 037-466333 Email: service@repairtw.com Line id: @zzzz www.repairtw.com

上正科技有限公司
購買、維修 此手冊零組件
電話： 037-466333
Email: service@repairtw.com
Line id: @zzzz
www.repairtw.com

4

Start-Up Programming & Operation

This chapter explains the functions of the digital operator and how to program the drive for initial operation.

4.1 SECTION SAFETY 86
4.2 USING THE DIGITAL OPERATOR 87
4.3 THE DRIVE AND PROGRAMMING MODES 91
4.4 START-UP FLOWCHARTS 98
4.5 POWERING UP THE DRIVE 102
4.6 APPLICATION SELECTION 103
4.7 AUTO-TUNING 109
4.8 NO-LOAD OPERATION TEST RUN 121
4.9 TEST RUN WITH LOAD CONNECTED 123
4.10 VERIFYING PARAMETER SETTINGS AND BACKING UP CHANGES 124
4.11 TEST RUN CHECKLIST 126

工作科技有限公司
電話： 037-466333
Email: service@repairtw.com
Line id: @zzzz
www.repairtw.com

4.1 Section Safety

⚠ DANGER

Electrical Shock Hazard

Do not connect or disconnect wiring while the power is on.

Failure to comply will result in death or serious injury.

⚠ WARNING

Electrical Shock Hazard

Do not operate equipment with covers removed.

Failure to comply could result in death or serious injury.

The diagrams in this section may include drives without covers or safety shields to illustrate details. Be sure to reinstall covers or shields before operating the drives and run the drives according to the instructions described in this manual.

Do not remove covers or touch circuit boards while the power is on.

Failure to comply could result in death or serious injury.

A separate holding brake should be prepared by the user.

The holding brake should be wired so that it is activated by an external sequence when a fault occurs, the power is shut off, or an emergency switch is triggered.

Failure to comply could result in death or serious injury.

Precautions should be taken on the machine side in crane and hoist applications to ensure that load does not fall or slip.

Failure to take proper safety precautions can result in serious injury.

上正科技有限公司
購買、維修 此手冊零組件
電話： 037-466333
Email: service@repairtw.com
Line id: @zzzz
www.repairtw.com

4.2 Using the Digital Operator

Use the digital operator to enter run and stop commands, display data, edit parameters, as well as display fault and alarm information.

◆ Keys and Displays

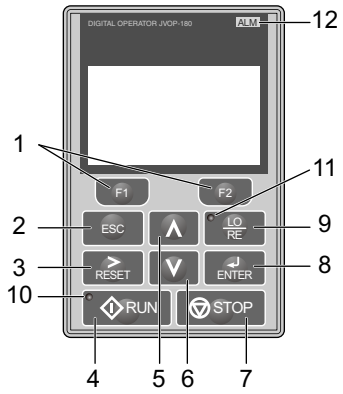

Figure 4.1 Keys and Displays on the Digital Operator

No.	Display	Name	Function
1	F1 / F2	Function Key (F1, F2)	The functions assigned to F1 and F2 vary depending on the menu that is currently displayed. The name of each function appears in the lower half of the display window.
2	ESC	ESC Key	• Returns to the previous display. • Moves the cursor one space to the left. • Pressing and holding this button will return to the Frequency Reference display.
3	RESET	RESET Key	• Moves the cursor to the right. • Resets the drive to clear a fault situation.
4	RUN	RUN Key	Starts the drive in the LOCAL mode. The Run LED • is on, when the drive is operating the motor. • flashes during deceleration to stop or when the frequency reference is 0. • flashes quickly the drive is disabled by a DI, the drive was stopped using a fast stop DI or a run command was active during power up.
5	∧	Up Arrow Key	Scrolls up to display the next item, selects parameter numbers and increments setting values.
6	∨	Down Arrow Key	Scrolls down to display the next item, selects parameter numbers and increments setting values.
7	STOP	STOP Key <1>	Stops drive operation.
8	ENTER	ENTER Key	• Enters parameter values and settings. • Selects a menu item to move between displays.
9	LO RE	LO/RE Selection Key <2>	Switches drive control between the operator (LOCAL) and the control circuit terminals (REMOTE). The LED is on when the drive is in the LOCAL mode (operation from keypad).
10	RUN	RUN Light	Lit while the drive is operating the motor. Refer to page *89* for details.
11	LO RE	LO/RE Light	Lit while the operator is selected to run the drive (LOCAL mode). Refer to page *89* for details.
12	ALM	ALM LED Light	*Refer to ALARM (ALM) LED Displays on page 89*.

上正科技有限公司
購買、維修 此手冊零組件
電話：
Email: service@repairtw.com
Line id:
www.repairtw.com

<1> The STOP key has highest priority. Pressing the STOP key will always cause the drive to stop the motor, even if a Run command is active at any external Run command source. To disable the STOP key priority, set parameter o2-06 to 0.
<2> The LO/RE key can only switch between LOCAL and REMOTE when the drive is stopped. To disable the LO/RE key to prohibit switching between LOCAL and REMOTE, set parameter o2-01 to 0.

◆ LCD Display

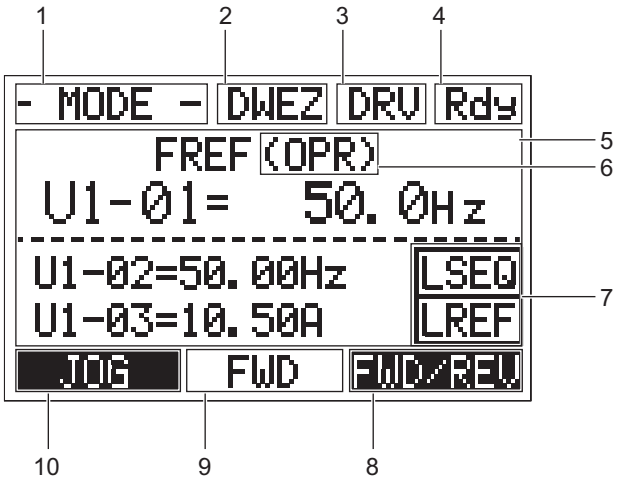

Figure 4.2 LCD Display

Table 4.1 Display and Contents

No.	Name	Display	Content
1	Operation Mode Menus	MODE	Displayed when in Mode Selection.
		MONITR	Displayed when in Monitor Mode.
		VERIFY	Indicates the Verify Menu.
		PRMSET	Displayed when in Parameter Setting Mode.
		A.TUNE	Displayed during Auto-Tuning.
		SETUP	Displayed when in Setup Mode.
2	DriveWorksEZ Function Selection	DWEZ	Displayed when the DriveWorksEZ is set to enable. (A1-07=1 or 2)
3	Mode Display Area	DRV	Displayed when in Drive Mode.
		PRG	Displayed when in Programming Mode.
4	Ready	Rdy	Indicates the drive is ready to run.
5	Data Display	–	Displays specific data and operation data.
6	Frequency Reference Assignment <1>	OPR	Displayed when the frequency reference is assigned to the LCD Operator Option.
		AI	Displayed when the frequency reference is assigned to the drives Analog Input.
		COM	Displayed when the frequency reference is assigned to the drives MEMOBUS/Modbus Communication Inputs.
		OP	Displayed when the frequency reference is assigned to a drive Option Unit.
		RP	Displayed when the frequency reference is assigned to the drives Pulse Train Input.
7	LO/RE Display <2>	RSEQ	Displayed when the run command is supplied from a remote source.
		LSEQ	Displayed when the run command is supplied from the operator keypad.
		RREF	Displayed when the frequency reference is supplied from a remote source.
		LREF	Displayed when the frequency reference is supplied from the operator keypad.
8	Function Key 1 (F1)	JOG	Pressing F1 executes the Jog function.
		HELP	Pressing F1 displays the Help menu.
		←	Pressing F1 scrolls the cursor to the left.
		HOME	Pressing F1 returns to the top menu (Frequency Reference).
		ESC	Pressing F1 returns to the previous display.
9	FWD/REV	FWD	Indicates forward motor operation.
		REV	Indicates reverse motor operation.
10	Function Key 2 (F2)	FWD/REV	Pressing F1 switches between forward and reverse.
		DATA	Pressing F1 scrolls to the next display.
		→	Pressing F1 scrolls the cursor to the right.
		RESET	Pressing F1 resets the existing drive fault or error.

台北阿隆有限公司
購買、維修、此手冊零組件
電話：037-456333
Email: service@ronpaitw.com
Line id: @3333
www.ronpaitw.com

<1> Displayed when in Frequency Reference Mode.
<2> Displayed when in Frequency Reference Mode and Monitor Mode.

◆ ALARM (ALM) LED Displays

Table 4.2 ALARM (ALM) LED Status and Contents

State	Content	Display
Illuminated	When the drive detects a fault.	
Flashing	• When an alarm occurs. • When oPE is detected. • When a fault or error occurs during Auto-Tuning.	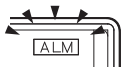
Off	Normal operation (no fault or alarm).	

◆ LO/RE LED and RUN LED Indications

Table 4.3 LO/RE LED and RUN LED Indications

LED	Lit	Flashing	Flashing Quickly <1>	Off
	When source of the Run command is assigned to the digital operator (LOCAL)	–	–	Run command to be given from a device other than the digital operator (REMOTE)
	During run	• During deceleration to stop • When a Run command is input and frequency reference is 0 Hz	• While the drive is set for LOCAL, a Run command was entered to the input terminals after which the drive was then switched to REMOTE. • A Run command was entered via the input terminals while not in the Drive Mode. • During deceleration when a Fast Stop command was entered. • The drive output is shut off by the Safe Disable function. • While the drive was running in the REMOTE mode, the STOP key was pushed. • The drive was powered up with b1-17 = 0 (default) while the Run command is active.	During stop
Examples				

購買、維修 此手冊零組件
電話： 037-466338
Email: service@repairtw.com
Line id: @zzzz
www.repairtw.com

<1> Refer to *Figure 4.3* for the difference between “flashing” and “flashing quickly”.

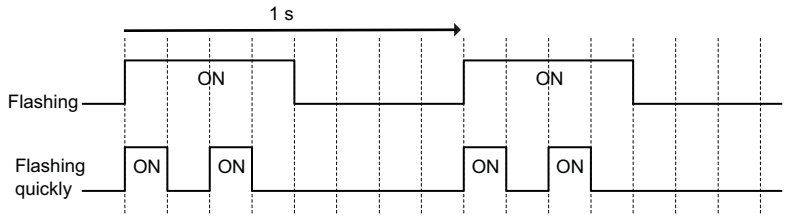

Figure 4.3 RUN LED Status and Meaning

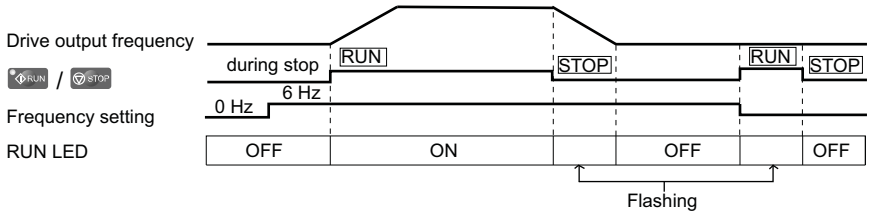

Figure 4.4 RUN LED and Drive Operation

◆ Menu Structure for Digital Operator

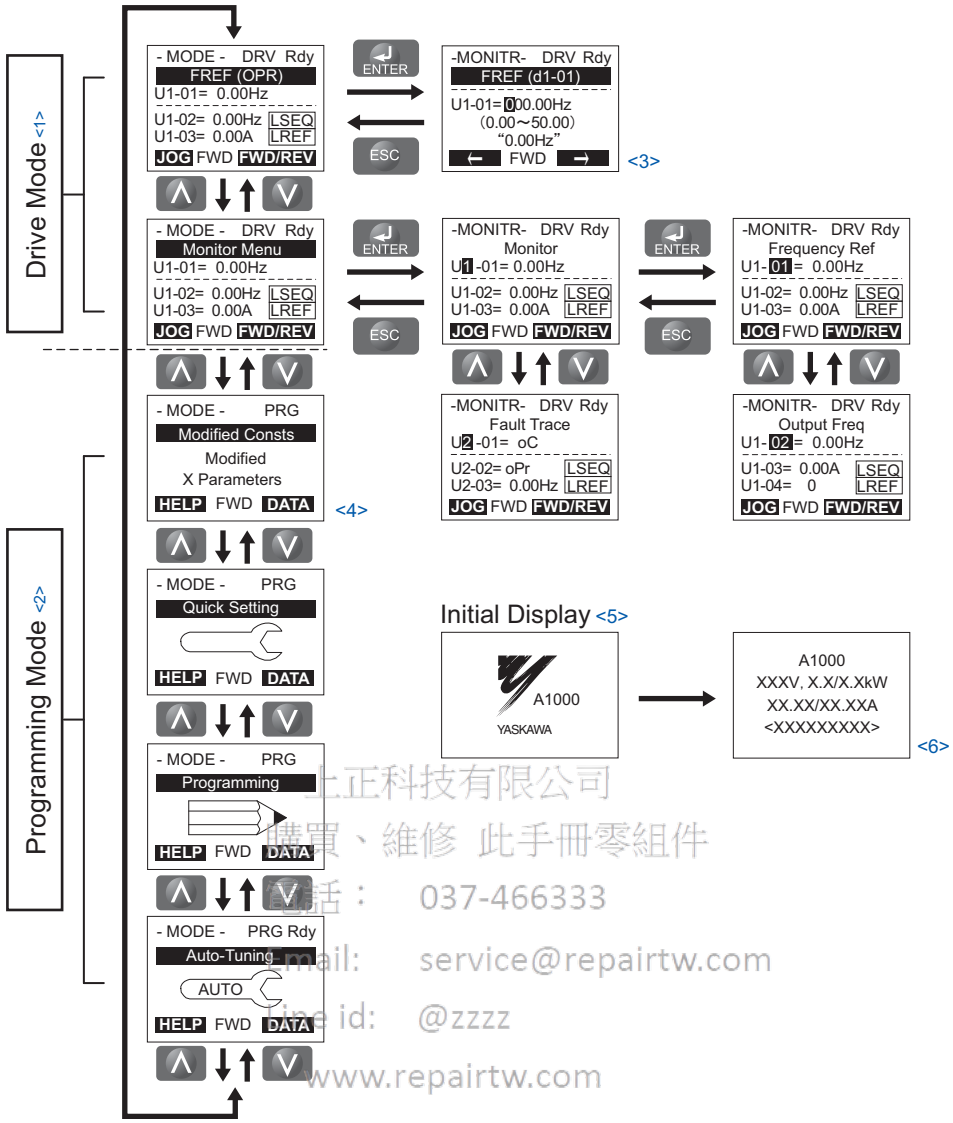

Figure 4.5 Digital Operator Menu and Screen Structure

<1> Pressing RUN will start the motor.
<2> Drive cannot operate the motor.
<3> Flashing characters are shown as 0.
<4> X characters are shown in this manual. The LCD Operator will display the actual setting values.
<5> The Frequency Reference appears after the initial display which shows the product name.
<6> The information that appears on the display will vary depending on the drive.

4.3 The Drive and Programming Modes

The drive has a Programming Mode to program the drive for operation, and a Drive Mode used to actually run the motor.

Drive Mode: In the Drive Mode, the user can start the motor and observe operation status with the monitors that are available. Parameter settings cannot be edited or changed when in the Drive Mode.

Programming Mode: The Programming Mode allows access to edit, adjust, and verify parameters, as well as perform Auto-Tuning. Unless set to allow a Run command, the drive will not accept a Run command when the digital operator is in the Programming Mode.

Note: If parameter b1-08 is set to 0 the drive will accept a Run command only in the Drive Mode. When editing parameters, the user must first exit the Programming Mode and enter the Drive Mode before starting the motor.

Note: To allow the drive to run the motor while in the Programming Mode, set b1-08 to 1.

◆ Navigating the Drive and Programming Modes

The drive is set to operate in Drive Mode when it is first powered up. Switch between display screens by using the ∧ and ∨ keys.

Mode	Contents	Operator Display	Description
Power Up	Frequency Reference (default)	- MODE - DRV Rdy FREF (OPR) U1-01= 0.00Hz U1-02= 0.00Hz LSEQ U1-03= 0.00A LREF JOG FWD FWD/REV	This display screen allows the user to monitor and change the frequency reference while the drive is running. *Refer to The Drive and Programming Modes on page 91*. **Note:** The user can select the data displayed when the drive is first powered up with parameter o1-02.
Drive Mode		∧ ∨	
	Monitor Display	- MODE - DRV Rdy Monitor Menu U1-01= 0.00Hz U1-02= 0.00Hz LSEQ U1-03= 0.00A LREF JOG FWD FWD/REV	Lists the monitor parameters (U□-□□ parameters) available in the drive. Press the Enter Key and then use the Up, Down, ESC, and Reset keys to navigate through the drive monitors.
Programming Mode		∧ ∨	
	Verify Menu	- MODE - PRG Modified Consts Modified X Parameters HELP FWD DATA	Lists all parameters that have been edited or changed from default settings. ➡ *Refer to Verifying Parameter Changes: Verify Menu on page 94*.
		∧ ∨	
	Setup Group	- MODE - PRG Quick Setting HELP FWD DATA	A select list of parameters necessary to get the drive operating quickly. ➡ *Refer to Using the Setup Group on page 95*. **Note:** Parameters listed in the Setup Group differ depending the Application Preset in parameter A1-06. *Refer to Application Selection on page 103*.
		∧ ∨	
	Parameter Setting Mode	- MODE - PRG Programming HELP FWD DATA	Allows the user to access and edit all parameter settings. ➡ *Refer to Parameter Table on page 400*.
		∧ ∨	
Programming Mode	Auto-Tuning Mode	- MODE - PRG Auto-Tuning AUTO HELP FWD DATA	Motor parameters are calculated and set automatically. ➡ *Refer to Auto-Tuning on page 109*.
		∧ ∨	

上正科技有限公司
購買、維修 此手冊零組件
電話： 037-466333
Email: service@repairtw.com
Line id: @zzzz
www.repairtw.com

Mode	Contents	Operator Display	Description
Drive Mode	Frequency Reference	- MODE - DRV Rdy FREF (OPR) U1-01= 0.00Hz U1-02= 0.00Hz LSEQ U1-03= 0.00A LREF JOG FWD FWD/REV	Returns to the frequency reference display screen.

■ Drive Mode Details

The following actions are possible in the Drive Mode:

- Run and stop the drive
- Monitor the operation status of the drive (frequency reference, output frequency, output current, output voltage, etc.)
- View information on an alarm
- View a history of alarms that have occurred

Figure 4.6 illustrates how to change the frequency reference from F 0.00 (0 Hz) to F 6.00 (6 Hz) while in the Drive Mode. This example assumes the drive is set to LOCAL.

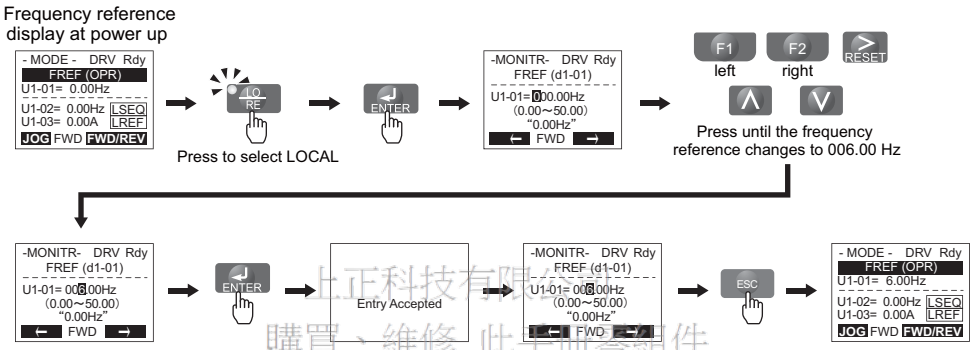

Figure 4.6 Setting the Frequency Reference while in the Drive Mode

止正科技有限公司
購買、維修 此手冊零組件
電話： 037-466333
Email: sprint@ms14.hinet.net
Line id: @zzzz
www.sprint.com.tw

Note: The drive will not accept a change to the frequency reference until the ENTER key is pressed after the frequency reference is entered. This feature prevents accidental setting of the frequency reference. To have the drive accept changes to the frequency reference as soon as changes are made without requiring the ENTER key, set o2-05 to 1.

■ Programming Mode Details

The following actions are possible in the Programming Mode:

- **Parameter Setting Mode:** Access and edit all parameter settings
- **Verify Menu:** Check a list of parameters that have been changed from their original default values
- **Setup Group:** Access a list of commonly used parameters to simplify setup (see *Simplified Setup Using the Setup Group on page 95*)
- **Auto-Tuning Mode:** Automatically calculates and sets motor parameters to optimize drive performance

◆ Changing Parameter Settings or Values

This example explains changing C1-02 (Deceleration Time 1) from 10.0 seconds (default) to 20.0 seconds.

Step			Display/Result
1.	Turn on the power to the drive. The initial display appears.	→	- MODE - DRV Rdy FREF (OPR) U1-01= 0.00Hz U1-02= 0.00Hz LSEQ U1-03= 0.00A LREF JOG FWD FWD/REV
2.	Press the ∧ or ∨ key until the Parameter Setting Mode screen appears.	→	- MODE - PRG Programming HELP FWD DATA

	Step		Display/Result
3.	Press the ENTER key to enter the parameter menu tree.	→	-PRMSET- PRG Initialization A1-00= 0 Select Language ← FWD →
4.	Press ∧ or ∨ key to select the C parameter group.	→	-PRMSET- PRG Basic Setup C1-01= 10.0 sec Accel Time 1 ← FWD →
5.	Press ENTER two times.	→ →	-PRMSET- PRG Accel/Decel C1-01= 10.0 sec Accel Time 1 ← FWD → -PRMSET- PRG Accel Time 1 C1-01= 10.0Sec (0.0~6000.0) "10.0 sec" ← FWD →
6.	Press ∧ or ∨ key to select the parameter C1-02.	→	-PRMSET- PRG Decel Time 1 C1-02= 10.0Sec (0.0~6000.0) "10.0 sec" ← FWD →
7.	Press ENTER to view the current setting value (10.0 s). Left digit flashes.	→	-PRMSET- PRG Decel Time 1 C1-02=0010.0Sec (0.0~6000.0) "10.0 sec" ← FWD →
8.	Press F1 (left), F2 (right) or RESET until the desired number is selected. "1" flashes.	→	-PRMSET- PRG Decel Time 1 C1-02=0010.0Sec (0.0~6000.0) "10.0 sec" ← FWD →
9.	Press the ∧ key and enter 0020.0.	→	-PRMSET- PRG Decel Time 1 C1-02=0020.0Sec (0.0~6000.0) "10.0 sec" ← FWD →
10.	Press ENTER and the drive will confirm the change.	→	Entry Accepted
11.	The display automatically returns to the screen shown in Step 4.	→	-PRMSET- PRG Decel Time 1 C1-02= 20.0Sec (0.0~6000.0) "10.0 sec" ← FWD →
12.	Press the ESC key until back at the initial display.	→	- MODE - DRV Rdy FREF (OPR) U1-01= 0.00Hz U1-02= 0.00Hz LSEQ U1-03= 0.00A LREF JOG FWD FWD/REV

上正科技有限公司
購買、維修 此手冊零組件
電話： 037-466333
Email: service@repairtw.com
Line id: @zzzz
www.repairtw.com

◆ Verifying Parameter Changes: Verify Menu

The Verify Menu lists edited parameters from the Programming Mode or as a result of Auto-Tuning. It helps determine which settings have been changed, and is particularly useful when replacing a drive. If no settings have been changed, the Verify Menu will read “None”. The Verify Menu also allows users to quickly access and re-edit any parameters settings that have been changed.

Note: The Verify Menu will not display parameters from the A1 group (except for A1-02) even if those parameters have been changed from their default settings.

The following example is a continuation of the steps above. Here, parameter C1-02 is accessed using the Verify Menu, and is changed again from 10.0 s to 20.0 s.

To check the list of edited parameters:

Step			Display/Result
1.	Turn on the power to the drive. The initial display appears.	→	- MODE - DRV Rdy FREF (OPR) U1-01= 0.00Hz U1-02= 0.00Hz LSEQ U1-03= 0.00A LREF JOG FWD FWD/REV
2.	Press ∧ or ∨ until the display shows the top of the Verify Menu.	→	- MODE - PRG Modified Consts Modified X Parameters HELP FWD DATA
3.	Press ENTER to enter the list of parameters that have been edited from their original default settings. If parameters other than C1-02 have been changed, use the ∧ or ∨ key to scroll until C1-02 appears.	→	- VERIFY - PRG Rdy Accel Time 1 C1-02 = 20.0sec (0.0~6000.0) “10.0sec” Home FWD DATA
4.	Press the ENTER key to access the setting value. Left digit flashes.	→	- VERIFY - PRG Rdy Accel Time 1 C1-01=0020.0sec (0.0~6000.0) “10.0sec” Home FWD DATA

大正科技有限公司
購買、維修 此手冊零組件
電話： 037-466333
Email: service@repairtw.com
Line id: @zzzz
www.repairtw.com

◆ Simplified Setup Using the Setup Group

In the Setup Group, the drive lists the basic parameters needed to set up the drive for the application. It provides a simplified way to get the application running right away by showing only the most important parameters.

■ Using the Setup Group

Figure 4.7 illustrates how to enter and how to change parameters in the Setup Group.

The first display shown when entering the Setup Group is the Application Selection menu. Skipping this display will keep the current Setup Group parameter selection. The default setting for the Setup Group is a group of parameters most commonly use in general-purpose applications. Pressing the ENTER key from the Application Selection display and selecting an Application Preset will change the Setup Group to parameters optimal for the application selected. *Refer to Application Selection on page 103*.

In this example, the Setup Group is accessed to change b1-01 from 1 to 0. This changes the source of the frequency reference from the control circuit terminals to the digital operator.

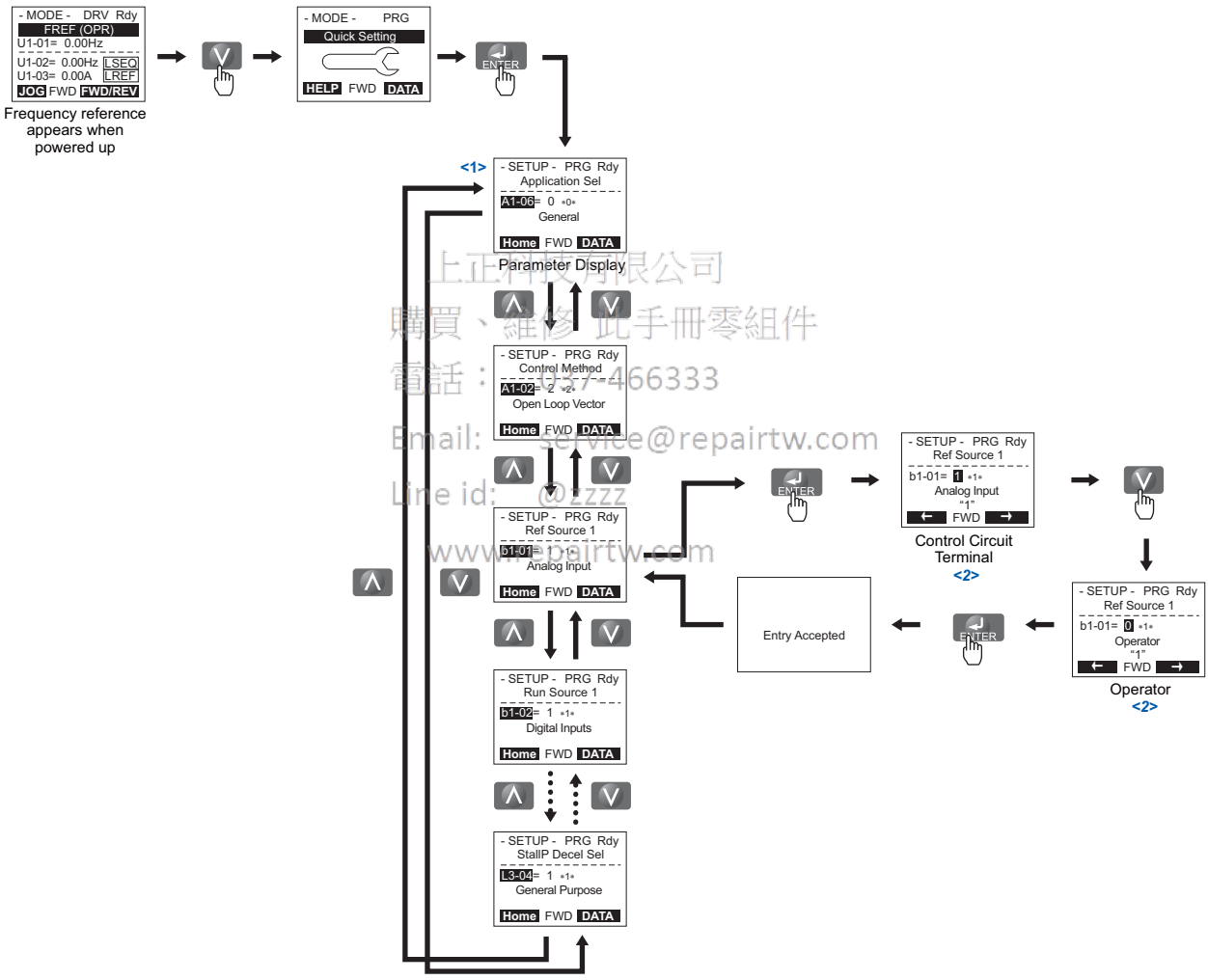

上正科技有限公司
購買、維修此手冊零組件
電話：0937-466333
Email: service@repairtw.com
Line id: @zzzz
www.repairtw.com

<1> Use the up and down arrow keys to scroll through the Setup Group. Press the ENTER key to view or change parameter settings.
<2> To return to the previous menu without saving changes, press the ESC key.

Figure 4.7 Setup Group Example

■ Setup Group Parameters

Table 4.4 lists parameters available by default in the Setup Group. When an Application Preset has been selected in parameter A1-06 or the Application Selection display of the Setup Group, the parameters selected for the Setup Group will change automatically. Refer to *Application Selection on page 103*.

If the desired parameter is not listed in the Setup Group, go to the Programming Mode.

Table 4.4 Setup Group Parameters

Parameter	Name
A1-02	Control Method Selection
b1-01	Frequency Reference Selection 1
b1-02	Run Command Selection 1
b1-03	Stopping Method Selection
C1-01	Acceleration Time 1
C1-02	Deceleration Time 1
C6-01	Drive Duty Mode Selection
C6-02	Carrier Frequency Selection
d1-01	Frequency Reference 1
d1-02	Frequency Reference 2
d1-03	Frequency Reference 3
d1-04	Frequency Reference 4
d1-17	Jog Frequency Reference
E1-01	Input Voltage Setting
E1-04	Maximum Output Frequency
E1-05	Maximum Voltage
E1-06	Base Frequency

Parameter	Name
E1-09	Minimum Output Frequency
E1-13	Base Voltage
E2-01	Motor Rated Current
E2-11	Motor Rate Power
E5-01	Motor Code Selection
E5-02	Motor Rated Power
E5-03	Motor Rated Current
E5-04	Number of Motor Poles
E5-05	Motor Stator Resistance
E5-06	Motor d-Axis Inductance
E5-07	Motor q-Axis Inductance
E5-09	Motor Induction Voltage Constant 1
E5-24	Motor Induction Voltage Constant 2
H4-02	Multi-Function Analog Output Terminal FM Gain
H4-05	Multi-Function Analog Output Terminal AM Gain
L1-01	Motor Overload Protection Function Selection
L3-04	Stall Prevention Selection during Deceleration

Note: Parameter availability depends on the control mode set in A1-02 that is used to run the drive and motor. Consequently, some of the parameters listed above may not be accessible in certain control modes.

上正科技有限公司
購買、維修 此手冊零組件
電話： 037-466333
Email: service@repairtw.com
Line Id: @zzzz
www.repairtw.com

◆ Switching Between LOCAL and REMOTE

When the drive is set to accept the Run command from the digital operator RUN key, this is referred to as LOCAL mode. When the drive is set to accept the Run command from an external device (via the input terminals, serial communications, etc.) this is referred to as REMOTE mode.

WARNING! *Sudden Movement Hazard. The drive may start unexpectedly if the Run command is already applied when switching from LOCAL mode to REMOTE mode when b1-07 = 1, resulting in death or serious injury. Be sure all personnel are clear of rotating machinery.*

The operation can be switched between LOCAL and REMOTE either by using the LO/RE key on the digital operator or a digital input.

Note: **1.** After selecting LOCAL, the LO/RE light will remain lit.
2. The drive will not allow the user to switch between LOCAL and REMOTE during run.

■ Using the LO/RE Key on the Digital Operator

Step			Display/Result
1.	Turn on the power to the drive. The initial display appears.	→	
2.	Press LO/RE. The LO/RE light will light up. The drive is now in LOCAL. To set the drive for REMOTE operation, press the LO/RE key again.	→	

■ Using Input Terminals S1 through S8 to Switch between LO/RE

The user can also switch between LOCAL and REMOTE modes using one of the digital input terminals S1 through S8 (set the corresponding parameter H1-☐☐ to “1”).

When setting the multi-function input terminals,

Note: **1.** *Refer to Parameter Table on page 400* for a list of digital input selections.
2. Setting H1-☐☐ to 1 disables the LO/RE key on the digital operator.

上正科技有限公司
購買、維修 此手冊零組件
電話： 037-466333
Email: service@repairtw.com
Line id: @zzzz
www.repairtw.com

4.4 Start-Up Flowcharts

The flowcharts in this section summarize basic steps required to start the drive. Use the flowcharts to determine the most appropriate start-up method for a given application. The charts are intended as a quick reference to help familiarize the user with start-up procedures.

Flowchart	Subchart	Objective	Page
A	–	Basic startup procedure and motor tuning	*98*
–	A-1	Simple motor setup using V/f mode	*99*
	A-2	High-performance operation using Open Loop Vector (OLV) or Closed Loop Vector (CLV) motor control	*100*
	A-3	Setting up the drive to run a permanent magnet (PM) motor	*101*

Note: To set up the drive using one of the Application Presets, refer to *Application Selection on page 103*.

◆ Flowchart A: Basic Start-up and Motor Tuning

Flowchart A in *Figure 4.8* describes a basic start-up sequence. This sequence varies slightly depending on the application. Use drive default parameter settings in simple applications that do not require high precision.

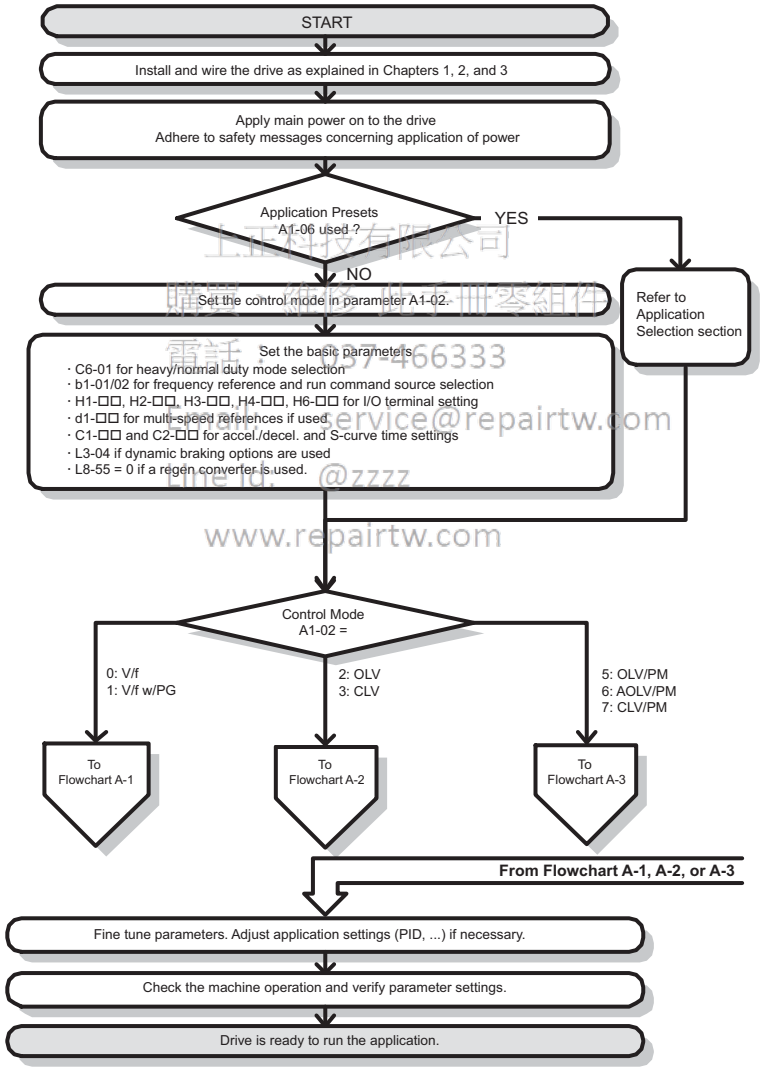

Figure 4.8 Basic Start-up

Note: When the motor cable length has changed for more than 50 m after Auto-Tuning has been performed (e.g., after the drive has been set up and then later installed in a different location), execute Stationary Auto-Tuning for resistance between motor lines once the drive is installed in its final installation location.

Note: Auto-Tuning should be performed again after installing an AC reactor or other such components to the output side of the drive.

◆ Subchart A-1: Simple Motor Setup Using V/f Control

Flowchart A1 in ***Figure 4.9*** describes simple motor setup for V/f Control, with or without PG feedback. V/f Control is suited for more basic applications such as fans and pumps. This procedure illustrates Energy Savings and Speed Estimation Speed Search.

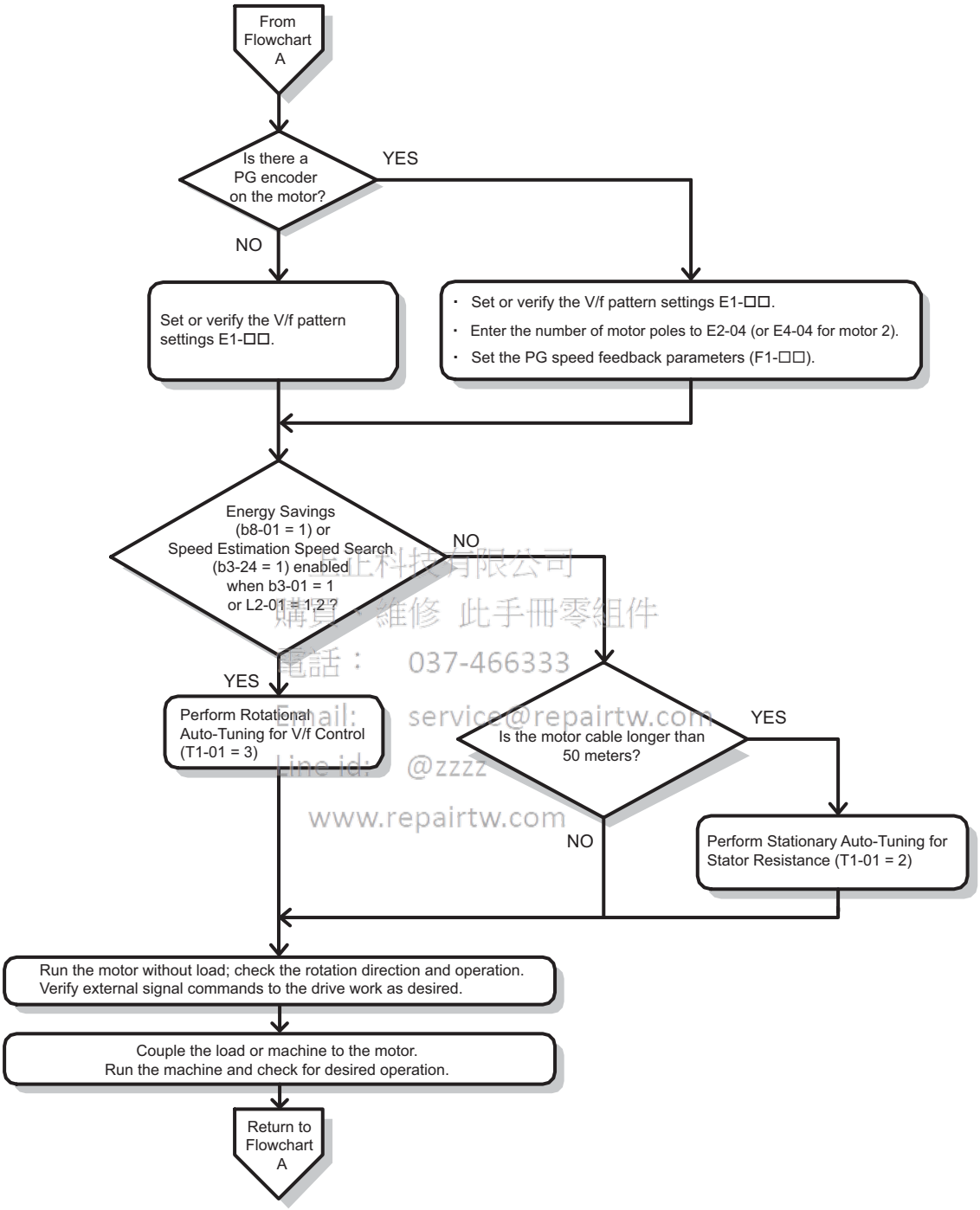

長正科技有限公司
購買、維修 此手冊零組件
電話： 037-466333
Email: service@repairtw.com
Line id: @zzzz
www.repairtw.com

Figure 4.9 Simple Motor Setup with Energy Savings or Speed Search

◆ Subchart A-2: High Performance Operation Using OLV or CLV

Flowchart A2 in ***Figure 4.10*** describes the setup procedure for high-performance with Open Loop Vector Control or Closed Loop Vector Control. Appropriate for applications requiring high starting torque and torque limits.

Note: Although the drive sets parameters for the PG encoder during Auto-Tuning, sometimes the direction of the motor and direction of the PG get reversed. Use parameter F1-05 to switch the direction of the PG so that it matches the motor direction.

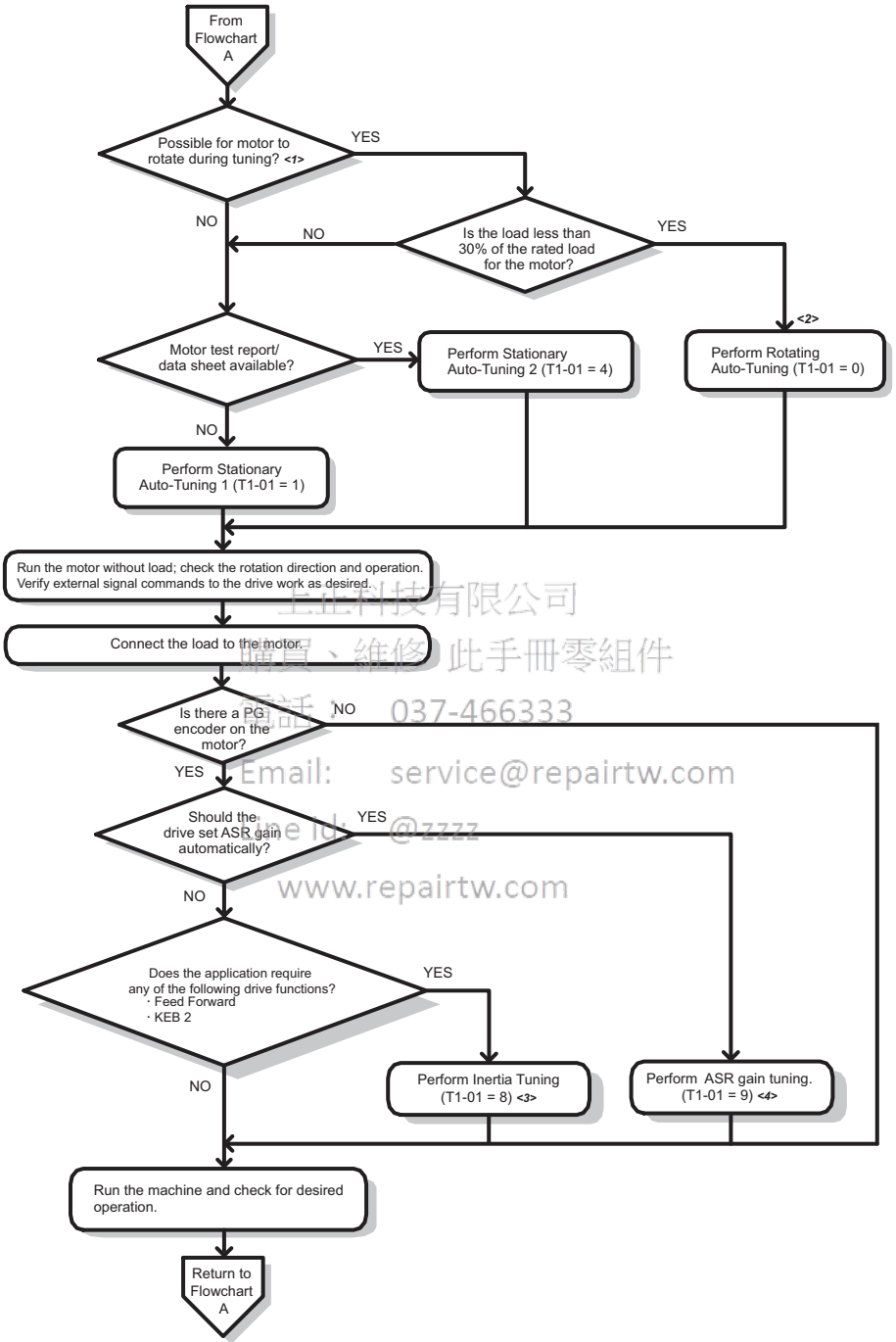

上正科技有限公司
購買、維修此手冊零組件
電話: 037-466333
Email: service@repairtw.com
line id: @zzzz
www.repairtw.com

<1> The load must be decoupled from the motor to properly perform Rotational Auto-Tuning.
<2> Rotational Auto-Tuning can still be performed if the load is 30% or less, though Stationary Auto-Tuning will probably yield better control performance.
<3> Make sure the motor and load can run freely, i.e., if a brake is mounted, make sure it is released.
<4> ASR Gain Tuning automatically performs Inertia Tuning and sets parameters related to Feed Forward and the KEB Ride-Thru function.

Figure 4.10 Flowchart A2: High Performance Operation Using OLV or CLV

◆ Subchart A-3: Operation with Permanent Magnet Motors

Flowchart A3 in ***Figure 4.11*** describes the set-up procedure for running a PM motor in Open Loop Vector Control. PM motors can be used for more energy-efficient operation in reduced or variable torque applications.

Note: **1.** Although the drive sets parameters for the PG encoder during Auto-Tuning, sometimes the direction of the motor and direction of the PG get reversed. Use parameter F1-05 to switch the direction of the PG so that it matches the motor direction.

2. The Z pulse must be realigned if the PG encoder is replaced. Set T2-01 to 3 to recalibrate the drive for the new encoder.

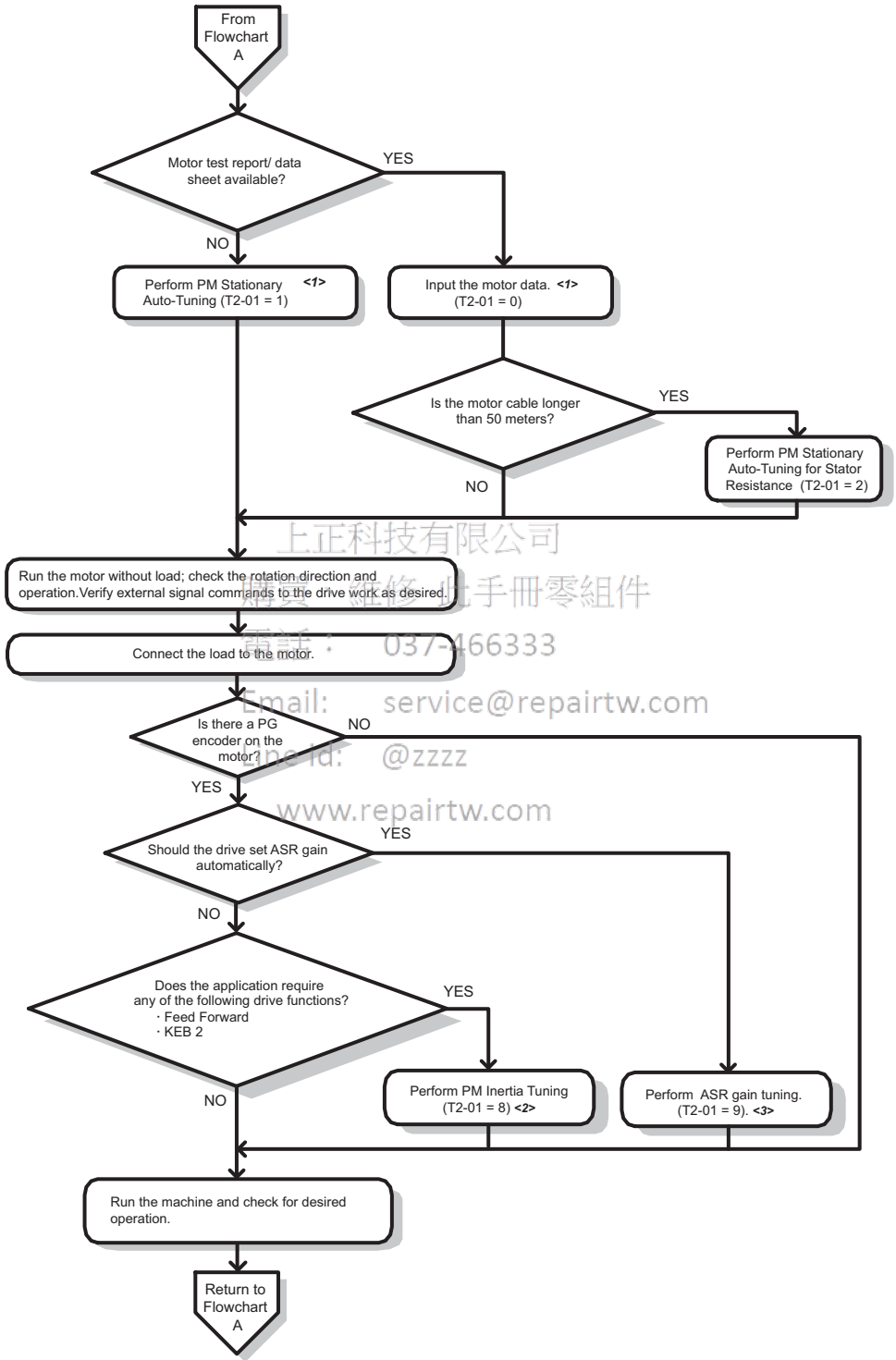

上正科技有限公司
購買、維修 此手冊零組件
電話： 037-466333
Email: service@repairtw.com
Line id: @zzzz
www.repairtw.com

<1> Enter the motor code to E5-01 when using a Yaskawa PM motor (SMRA Series, SSR1 Series, and SST4 Series). If using a motor from another manufacturer, enter FFFF.
<2> Make sure the motor and load can run freely, i.e., if a brake is mounted, make sure it is released.
<3> ASR Gain Tuning automatically performs Inertia Tuning and sets parameters related to Feed Forward and the KEB Ride-Thru function.

Figure 4.11 Operation with Permanent Magnet Motors

4.5 Powering Up the Drive

◆ Powering Up the Drive and Operation Status Display

■ Powering Up the Drive

Review the following checklist before turning the power on.

Item to Check	Description
Power supply voltage	Ensure the power supply voltage is correct: 200 V class: 3-phase 200 to 240 Vac 50/60 Hz 400 V class: 3-phase 380 to 480 Vac 50/60 Hz
	Properly wire the power supply input terminals (R/L1, S/L2, T/L3).
	Check for proper grounding of drive and motor.
Drive output terminals and motor terminals	Properly wire drive output terminals U/T1, V/T2, and W/T3 with motor terminals U, V, and W.
Control circuit terminals	Check control circuit terminal connections.
Drive control terminal status	Open all control circuit terminals (off).
Status of the load and connected machinery	Decouple the motor from the load.

■ Status Display

When the power supply to the drive is turned on, the digital operator lights will appear as follows:

No.	Name	Description
Normal Operation	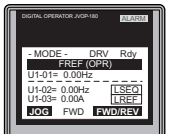	The data display area displays the frequency reference. DRV is lit.
Fault	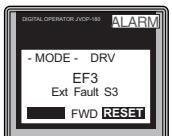 External fault (example)	Data displayed varies by the type of fault. Refer to *Fault Displays, Causes, and Possible Solutions on page 306* for more information and possible solution. ALM and DRV are lit.

上正科技有限公司
購買、維修 此手冊零組件
電話： 037-466333
Email service@repairtw.com
Line id: @zzzz
www.repairtw.com

4.6 Application Selection

Several Application Presets are available to facilitate drive setup for commonly used applications. Selecting one of these Application Presets automatically assigns functions to the input and output terminals, and sets certain parameters to values appropriate for the application that was selected. In addition, the parameters most likely to be changed are assigned to the group of User Parameters, A2-01 through A2-16. User Parameters are part of the Setup Group, and provide quicker access to by eliminating the need to scroll through multiple menus.

An Application Preset can either be selected from the Application Selection display in the Setup Group (*Refer to Simplified Setup Using the Setup Group on page 95*) or in parameter A1-06. The following presets can be selected:

Note: An Application Preset can only be selected if all drive parameters are on at their original default settings. It may be necessary to initialize the drive by setting A1-03 to "2220" or "3330" prior to selecting an Application Preset.

WARNING! *Confirm the drive I/O signals and external sequence before performing a test run. Setting parameter A1-06 may change the I/O terminal function automatically from the default setting. Failure to comply may result in death or serious injury.*

No.	Parameter Name	Setting Range	Default
A1-06	Application Presets	0: Disabled 1: Water supply pump 2: Conveyor 3: Exhaust fan 4: HVAC 5: Compressor 6: Hoist 7: Crane	0

◆ Setting 1: Water Supply Pump Application

Table 4.5 Water Supply Pump: Parameter Settings

No.	Name	Default Setting
A1-02	Control Method Selection	0: V/f Control
b1-04	Reverse Operation Selection	1: Reverse Prohibited
C1-01	Acceleration Time 1	1.0 s
C1-02	Deceleration Time 1	1.0 s
C6-01	Duty Rating	1: Normal Duty
E1-03	V/f Pattern Selection	0FH
E1-07	Mid Output Frequency	30.0 Hz
E1-08	Mid Output Frequency Voltage	50.0 V
L2-01	Momentary Power Loss Operation Selection	1: Enabled
L3-04	Stall Prevention Selection during Deceleration	1: Enabled

上正科技有限公司
購買、維修 此手冊零組件
電話： 037-466333
Email: service@repairtw.com
Line id: @zzz
www.repairtw.com

Table 4.6 Water Supply Pump: User Parameters (A2-01 to A2-16)

No.	Parameter Name	No.	Parameter Name
b1-01	Frequency Reference Selection	E1-08	Mid Output Frequency Voltage
b1-02	Run Command Selection	E2-01	Motor Rated Current
b1-04	Reverse Operation Selection	H1-05	Multi-Function Digital Input Terminal S5 Function Selection
C1-01	Acceleration Time 1	H1-06	Multi-Function Digital Input Terminal S6 Function Selection
C1-02	Deceleration Time 1	H1-07	Multi-Function Digital Input Terminal S7 Function Selection
E1-03	V/f Pattern Selection	L5-01	Number of Auto Restart Attempts
E1-07	Mid Output Frequency	–	–

◆ Setting 2: Conveyor Application

Table 4.7 Conveyor: Parameter Settings

No.	Parameter Name	Default Setting
A1-02	Control Method Selection	0: V/f Control
C1-01	Acceleration Time 1	3.0 s
C1-02	Deceleration Time 1	3.0 s
C6-01	Duty Rating	0: Heavy Duty
L3-04	Stall Prevention Selection during Deceleration	1: Enabled

Table 4.8 Conveyor: User Parameters (A2-01 to A2-16)

No.	Parameter Name	No.	Parameter Name
A1-02	Control Method Selection	C1-02	Deceleration Time 1
b1-01	Frequency Reference Selection	E2-01	Motor Rated Current
b1-02	Run Command Selection	L3-04	Stall Prevention Selection during Deceleration
C1-01	Acceleration Time 1	–	–

◆ Setting 3: Exhaust Fan Application

Table 4.9 Exhaust Fan: Parameter Settings

No.	Parameter Name	Default Setting
A1-02	Control Method Selection	0: V/f Control
b1-04	Reverse Operation Selection	1: Reverse Prohibited
C6-01	Duty Selection	1: Normal Duty
E1-03	V/f Pattern Selection	0FH
E1-07	Mid Output Frequency	30.0 Hz
E1-08	Mid Output Frequency Voltage	50.0 V
L2-01	Momentary Power Loss Operation Selection	1: Enabled
L3-04	Stall Prevention Selection during Deceleration	1: Enabled

Table 4.10 Exhaust Fan: User Parameters (A2-01 to A2-16)

No.	Parameter Name	No.	Parameter Name
b1-01	Frequency Reference Selection	E1-07	Mid Output Frequency
b1-02	Run Command Selection	E1-08	Mid Output Frequency Voltage
b1-04	Reverse Operation Selection	E2-01	Motor Rated Current
b3-01	Speed Search Selection at Start	H1-05	Multi-Function Digital Input Terminal S5 Function Selection
C1-01	Acceleration Time 1	H1-06	Multi-Function Digital Input Terminal S6 Function Selection
C1-02	Deceleration Time 1	H1-07	Multi-Function Digital Input Terminal S7 Function Selection
E1-03	V/f Pattern Selection	L5-01	Number of Auto Restart Attempts

上正科技有限公司
購買、維修 此手冊零組件
電話: 037-466333
Email: service@repairtw.com
Line id: @zzzz
www.repairtw.com

◆ Setting 4: HVAC Fan Application

Table 4.11 HVAC Fan: Parameter Settings

No.	Parameter Name	Default Setting
A1-02	Control Method Selection	0: V/f Control
b1-04	Reverse Operation Selection	1: Reverse Prohibited
b1-17	Run Command at Power Up	1: Run command issued, motor operation start
C6-01	Duty Rating	1: Normal Duty
C6-02	Carrier Frequency Selection	3: 8.0 kHz
H2-03	Terminals P2 Function Selection	39: Watt Hour Pulse Output
L2-01	Momentary Power Loss Operation Selection	2: CPU Power Active - Drive will restart if power returns prior to control power supply shut down.
L8-03	Overheat Pre-Alarm Operation Selection	4: Operation at lower speed
L8-38	Carrier Frequency Reduction	2: Enabled across entire frequency range.

Table 4.12 HVAC Fan: User Parameters (A2-01 to A2-16)

No.	Parameter Name	No.	Parameter Name
b1-01	Frequency Reference Selection	d2-02	Frequency Reference Lower Limit
b1-02	Run Command Selection	E1-03	V/f Pattern Selection
b1-03	Stopping Method Selection	E1-04	Max Output Frequency
b1-04	Reverse Operation Selection	E2-01	Motor Rated Current
C1-01	Acceleration Time 1	H3-11	Terminal A2 Gain Setting
C1-02	Deceleration Time 1	H3-12	Terminal A2 Input Bias
C6-02	Carrier Frequency Selection	L2-01	Momentary Power Loss Operation Selection
d2-01	Frequency Reference Upper Limit	o4-12	kWh Monitor Initial Value Selection

◆ Setting 5: Compressor Application

Table 4.13 Compressor: Parameter Settings

No.	Parameter Name	Default Setting
A1-02	Control Method Selection	0: V/f Control
b1-04	Reverse Operation Selection	1: Reverse Prohibited
C1-01	Acceleration Time 1	5.0 s
C1-02	Deceleration Time 1	5.0 s
C6-01	Duty Rating	0: Heavy Duty
E1-03	V/f Pattern Selection	0FH
L2-01	Momentary Power Loss Operation Selection	1: Enabled
L3-04	Stall Prevention Selection during Deceleration	1: Enabled

Table 4.14 Compressor: User Parameters (A2-01 to A2-16):

No.	Parameter Name	No.	Parameter Name
b1-01	Frequency Reference Selection	E1-03	V/f Pattern Selection
b1-02	Run Command Selection	E1-07	Mid Output Frequency
b1-04	Reverse Operation Selection	E1-08	Mid Output Frequency Voltage
C1-01	Acceleration Time 1	E2-01	Motor Rated Current
C1-02	Deceleration Time 1	–	–

◆ Setting 6: Hoist Application

Note: **1.** Read the instructions listed on page *106* when using Hoist Application Preset
2. Perform Auto-Tuning after selecting the Hoist Application Preset.

Table 4.15 Hoist: Parameters and Settings

No.	Parameter Name	Default Setting
A1-02	Control Method Selection	2: Open Loop Vector Control
b1-01	Frequency Reference Selection	0: Operator
b6-01	Dwell Reference at Start	3.0 Hz
b6-02	Dwell Time at Start	0.3 s
C1-01	Acceleration Time 1	3.0 s
C1-02	Deceleration Time 1	3.0 s
C6-01	Duty Rating	0: Heavy Duty
C6-02	Carrier Frequency Selection	2: 5 kHz
d1-01	Frequency Reference 1	6.0 Hz
d1-02	Frequency Reference 2	30.0 Hz
d1-03	Frequency Reference 3	50. 0 Hz
E1-03	V/f Pattern Selection	0FH
H2-01	Terminals M1-M2 Function Selection	5: Frequency Detection 2
H2-02	Terminals M3-M4 Function Selection	37: During Frequency Output
L2-03	Momentary Power Loss Minimum Baseblock Time	0.3 s
L3-04	Momentary Power Loss Voltage Recovery Ramp Time	0: Disabled
L4-01	Speed Agreement Detection Level	2.0 Hz
L4-02	Speed Agreement Detection Width	0.0 Hz
L6-01	Torque Detection Selection 1	8: UL3 at RUN - Fault
L6-02	Torque Detection Level 1	2%
L6-03	Torque Detection Time 1	0.5 s
L8-05	Input Phase Loss Protection Selection	1: Enabled
L8-07	Output Phase Loss Protection	1: Enabled
L8-38	Carrier Frequency Reduction	1: Enabled below 6 Hz
L8-41	Current Alarm Selection	1: Enabled (alarm is output)

正基科技有限公司
購買、維修 此手冊零組件
電話： 037-466333
Email: service@repairtw.com
Line id: @zzzz
www.repairtw.com

Table 4.16 Hoist: User Parameters (A2-01 to A2-16):

No.	Parameter Name	No.	Parameter Name
A1-02	Control Method Selection	d1-02	Frequency Reference 2
b1-01	Frequency Reference Selection	d1-03	Frequency Reference 3
b6-01	Dwell Reference at Start	E1-08	Mid Output Frequency Voltage
b6-02	Dwell Time at Start	H2-01	Terminals M1-M2 Function Selection
C1-01	Acceleration Time 1	L1-01	Motor Overload Protection Selection
C1-02	Deceleration Time 1	L4-01	Speed Agreement Detection Level
C6-02	Carrier Frequency Selection	L6-02	Torque Detection Level 1
d1-01	Frequency Reference 1	L6-03	Torque Detection Time 1

◆ Notes on Controlling the Brake when Using the Hoist Application Preset

■ Prevent accidental Brake Release during Baseblock

The hoist application selection uses the frequency detection function for controlling the brake.

Although the drive output will be shut off, the drive still maintains the frequency reference if the Run command remains active when an external Baseblock command is given (H1-☐☐ = 8 or 9). Disable the frequency detection during baseblock by setting parameter L4-07 = 0 to prevent the brake remaining open while the drive is in baseblock.

■ Controlling the Brake in Closed Loop Vector Control

For hoist applications using Closed Loop Vector Control, Yaskawa recommends setting the “During frequency output” signal to a digital output (H2-01 = 37 for terminal M1-M2) in order to control the brake. This way, the brake will always close during baseblock, and the setting of parameter L4-07 as described above will not affect brake control.

■ Brake Control During Safe Disable Input

If the Safe Disable input is triggered, the drive output will shut off and the frequency reference will reset to 0. The brake will also close, regardless if the Run command is active. The Run command must be cycled before the drive can restart.

■ Related Parameter Settings

The table below shows the parameter settings needed when using output terminals M1-M2 as brake control output.

Function	Parameter	Setting	Comment
Frequency Detection 2 Digital Output (for brake control)	H2-01	5	Use this setup for V/f control modes or Open Loop Vector control
Speed Agreement Detection Level (frequency for the brake to open)	L4-01	1.0 to 3.0 Hz <1>	
Speed Agreement Width (bandwidth for the brake to close)	L4-02	0.0 to 0.5 Hz <2>	
Frequency Detection during Baseblock	L4-07	0	
DC Injection Braking Start Frequency (frequency for the brake to close)	b2-01	0.1 to 0.5 Hz	Use this setup in Closed Loop Vector control for IM or PM motors
During Frequency Output	H2-01	37	

上正科技有限公司
購買、維修 此手冊零組件
電話： 037-466233
Email: service@repairtw.com
Line id: @zzzz
www.repairtw.com

<1> This is the setting recommended when using Open Loop Vector Control. If using V/f Control, set the level as the motor rated slip frequency plus 0.5 Hz. Not enough motor torque will be created if this value is set too low, and the load may tend to slip. Make sure this value is greater than the minimum output frequency and greater than the value of L4-02, as shown in the diagram below. If set too high, however, there may be a jolt at start.

<2> Hysteresis for Frequency detection 2 can be adjusted by the Frequency detection width (L4-02) between 0.0 and 0.5 Hz. If the load slips during stop, make changes in steps of 0.1 Hz until the load no longer slips.

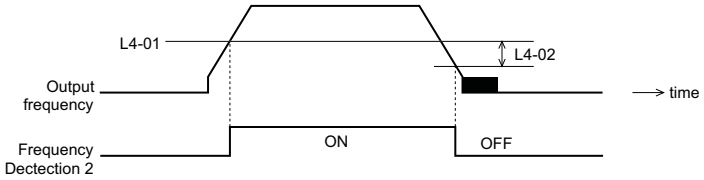

Figure 4.12 Frequency Detection 2

■ Sequence Circuit Configuration Example

The braking sequence should be designed as follows:

- A normally open signal (N.O.) should be used to control the brake so that it is released when terminal M1-M2 closes.
- When a fault signal is output, the brake should close.

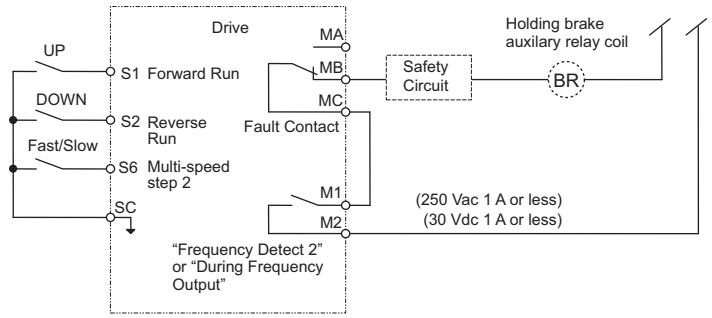

Figure 4.13 Sequence Circuit Configuration

- The brake should release just a bit after the Run command is issued, allowing the motor to build up torque. If using the V/f, V/f w PG or OLV control modes and the "Frequency detection 2" signal controls the brake, the motor can be given time to build up torque by setting the brake release level in parameter L4-01. Additionally, DC Injection Braking at start can be applied. If using CLV or CLV/PM and the "During frequency output" signal controls the brake, initial excitation should be enabled. Set the initial excitation time to parameter b2-03.
- The time chart below gives a an example sequence.

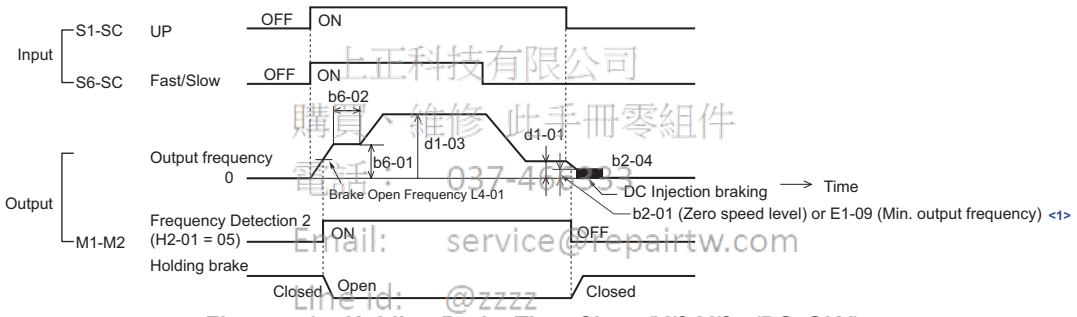

上正科技有限公司
購買、維修 此手冊零組件
電話：037-461353
Email: service@repairtw.com
Line Id: @zzzz
www.repairtw.com

Figure 4.14 Holding Brake Time Chart (V/f, V/f w/PG, OLV)

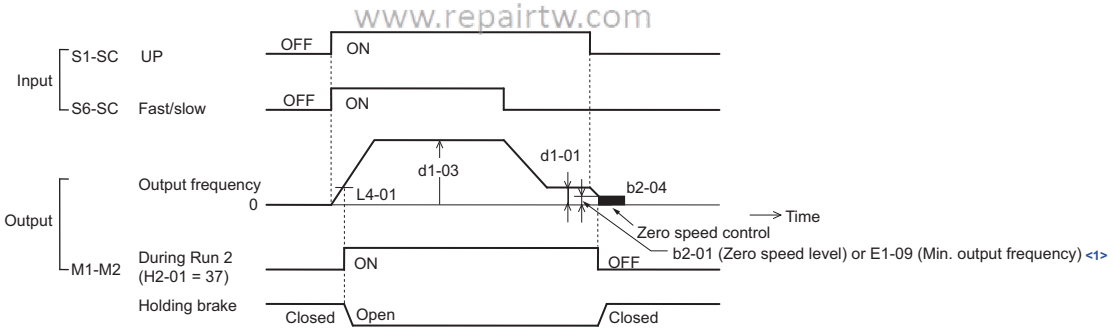

Figure 4.15 Holding Brake Time Chart (CLV, CLV/PM)

◆ Setting 7: Traveling Application

Table 4.17 Traveling: Parameters and Settings

No.	Parameter Name	Default Setting
A1-02	Control Mode	0: V/f Control
b1-01	Frequency Reference Selection	0: Operator
C1-01	Acceleration Time 1	3.0 s
C1-02	Deceleration Time 1	3.0 s
C6-01	Normal/Heavy Duty Selection	0: Heavy Duty
C6-02	Carrier Frequency Selection	2: 5 kHz
d1-01	Frequency Reference 1	6.0 Hz
d1-02	Frequency Reference 2	30.0 Hz
d1-03	Frequency Reference 3	50.0 Hz
H1-05	Multi-Function Digital Input Terminal S5 Function	3: Multi-Step Speed 1
H1-06	Multi-Function Digital Input Terminal S6 Function	4: Multi-Step Speed 2
H2-02	Terminals M3-M4 Function Selection	37: During frequency output
L3-04	Stall Prevention Selection during Decel	0: Disabled
L8-05	Input Phase Loss Protection Selection	1: Enabled
L8-07	Output Phase Loss Protection	1: Triggered when one output phase is lost
L8-38	Carrier Frequency Reduction	1: Enabled below 6 Hz
L8-41	Current Alarm Selection	1: Enabled (alarm output)

Table 4.18 Traveling: User Parameters (A2-01 to A2-16):

No.	Parameter Name	No.	Parameter Name
b1-01	Frequency Reference Selection	d1-03	Frequency Reference 3
C1-01	Acceleration Time 1	E2-01	Motor Rated Current
C1-02	Deceleration Time 1	H1-05	Multi-Function Digital Input Terminal S5 Function
C6-02	Carrier Frequency Selection	H1-06	Multi-Function Digital Input Terminal S6 Function
d1-01	Frequency Reference 1	H2-01	Terminals M1-M2 Function Selection
d1-02	Frequency Reference 2	L1-01	Motor Overload Protection Selection

上正科技有限公司
購買、維修 此手冊零組件
電話： 037-466333
Email: service@repairtw.com
Line id: @zzzz
www.repairtw.com

4.7 Auto-Tuning

◆ Types of Auto-Tuning

The drive offers different types of Auto-Tuning for induction motors and permanent magnet motors. The type of Auto-Tuning used differs further based on the control mode and other operating conditions. Refer to the tables below to select the type of Auto-Tuning that bests suits the application. Directions on how to execute Auto-Tuning are listed in ***Start-Up Flowcharts on page 98***.

Note: The drive will only show Auto-Tuning parameters that are valid for the control mode that has been set to A1-02. If the control mode is for an induction motor, the Auto-Tuning parameters for PM motors will not be available. If the control mode is for a PM motor, the Auto-Tuning parameters for induction motors will not be available. Inertia Tuning and ASR Gain Tuning parameters and setting options will be visible only when the drive is set for operation with Closed Loop Vector or CLV/PM.

■ Auto-Tuning for Induction Motors

This feature automatically sets the V/f pattern and motor parameters E1-□□ and E2-□□ (E3-□□, E4-□□ for motor 2) for an induction motor. In Closed Loop Vector, some F1-□□ parameters for speed feedback detection are also set up.

Table 4.19 Types of Auto-Tuning for Induction Motors

Type	Setting	Application Conditions and Benefits	Control Mode			
			V/f	V/f w/PG	OLV	CLV
Rotational Auto-Tuning	T1-01 = 0	• Motor can be decoupled from the load and rotate freely while Auto-Tuning is performed. • Motor and load can not be decoupled but the motor load is below 30%. • Rotational Auto-Tuning gives the most accurate results, and is therefore highly recommended if possible.	N/A	N/A	YES	YES
Stationary Auto-Tuning 1	T1-01 = 1	• Motor and load can not be decoupled and the load is higher than 30%. • A motor test report listing motor data is not available. • Automatically calculates motor parameters needed for vector control.	N/A	N/A	YES	YES
Stationary Auto-Tuning 2	T1-01 = 4	• Motor and load can not be decoupled and the load is higher than 30%. • A motor test report is available. Once the no-load current and the rated slip have been entered, the drive calculates and sets all other motor-related parameters.	N/A	N/A	YES	YES
Stationary Auto-Tuning for Line-to-Line Resistance	T1-01 = 2	• The drive is used in V/f Control and other Auto-Tuning selections not possible. • Drive and motor capacities differ. • Tunes the drive after the cable between the drive and motor has been replaced with a cable over 50 m long. Assumes Auto-Tuning has already been performed. • Should not be used for any vector control modes unless the motor cable has changed.	YES	YES	YES	YES
Rotational Auto-Tuning for V/f Control	T1-01 = 3	• Recommended for applications using Speed Estimation Speed Search or using the Energy Saving function in V/f Control. • Assumes motor can rotate while Auto-Tuning is executed. Increases accuracy for certain functions like torque compensation, slip compensation, Energy Saving, and Speed Search.	YES	YES	N/A	N/A

上市科技有限公司
購買、維修 此手冊零組件
電話： 037-466333
Email: service@repairtw.com
Line id: @zzzz
www.repairtw.com

Table 4.20 lists the data that must be entered for Auto-Tuning. Make sure this data is available before starting Auto-Tuning. The information needed is usually listed on the motor nameplate or in the motor test report provided by the motor manufacturer. Also refer to page ***99*** and ***100*** for details on Auto-Tuning process and selections.

Table 4.20 Auto-Tuning Input Data

Input Value	Input Parameter	Unit	Tuning Type (T1-01)				
			0 Standard	1 Stationary 1	2 Line-to-Line Resistance	3 Rotational for V/f Control	4 Stationary 2
Motor rated power	T1-02	kW	YES	YES	YES	YES	YES
Motor rated voltage	T1-03	Vac	YES	YES	N/A	YES	YES
Motor rated current	T1-04	A	YES	YES	YES	YES	YES
Motor rated frequency	T1-05	Hz	YES	YES	N/A	YES	YES
Number of motor poles	T1-06	-	YES	YES	N/A	YES	YES
Motor rated Speed	T1-07	r/min	YES	YES	N/A	YES	YES
PG Number of pulses per revolution	T1-08	-	YES <1>	YES <1>	N/A	N/A	YES <1>
Motor no-load current	T1-09	A	N/A	YES	N/A	N/A	YES
Motor rated Slip	T1-10	Hz	N/A	N/A	N/A	N/A	YES
Motor iron loss	T1-11	W	N/A	N/A	N/A	YES	N/A

<1> Input data is needed for CLV/PM only.

■ Auto-Tuning for Permanent Magnet Motors

Automatically sets the V/f pattern and motor parameters E1-☐☐ and E5-☐☐ when a PM motor is used. In Closed Loop Vector Control, the Auto-Tuning process will also set some F1-☐☐ parameters for speed feedback detection.

Table 4.21 Types of Auto-Tuning for Permanent Magnet Motors

Type	Setting	Application Conditions and Benefits	Control Mode		
			OLV/PM	AOLV/PM	CLV/PM
PM Motor Parameter Settings	T2-01 = 0	• Motor does not rotate during Auto-Tuning • Motor test report or motor data like listed in *Table 4.22* are available.	YES	YES	YES
PM Stationary Auto-Tuning	T2-01 = 1	• A motor test report listing motor data is not available. Drive automatically calculates and sets motor parameters.	YES	YES	YES
PM Stationary Auto-Tuning for Stator Resistance	T2-01 = 2	• Useful to tune the drive when the motor data were set up manually or by motor code and the cable is longer than 50 m. Should also be performed if the cable has changed after earlier tuning.	YES	YES	YES
Z Pulse Offset Tuning	T2-01 = 3	• PG encoder has been replaced. Calculates the Z pulse offset. • Requires the motor to rotate with no or very low load.	N/A	N/A	YES

Table 4.22 lists the data that must be entered for Auto-Tuning. Make sure the data is available before starting Auto-Tuning. The information needed is usually listed on the motor nameplate or in the motor test report provided by the motor manufacturer. Also refer to page *101* for details on the tuning mode selection and the tuning process.

Table 4.22 Auto-Tuning Input Data

Input Value	Input Parameter	Unit	Tuning Type (T2-01)						
			0 Parameter Calculation			1 Stationary		2 Phase Resistance	3 Z-Pulse Offset
Control Mode	A1-02	-	5, 6, 7	5	6, 7	5	6, 7	5, 6, 7	7
Motor Code	T2-02	-	<1>	<1>	<1>	<2>	<2>	<2>	<2>
Motor Type	T2-03	-	N/A	N/A	N/A	YES	YES	N/A	N/A
Motor rated power	T2-04	kW	N/A	YES	YES	YES	YES	N/A	N/A
Motor rated voltage	T2-05	Vac	N/A	YES	YES	YES	YES	N/A	N/A
Motor rated current	T2-06	A	N/A	YES	YES	YES	YES	YES	N/A
Motor rated frequency	T2-07	Hz	N/A	YES	N/A	YES	N/A	N/A	N/A
Number of motor poles	T2-08	-	N/A	YES	YES	YES	YES	N/A	N/A
Motor rated Speed	T2-09	r/min	N/A	N/A	YES	N/A	YES	N/A	N/A
Stator 1 Phase resistance	T2-10	Ω	YES	YES	YES	N/A	N/A	N/A	N/A
d-axis inductance	T2-11	mH	YES	YES	YES	N/A	N/A	N/A	N/A
q-axis inductance	T2-12	mH	YES	YES	YES	N/A	N/A	N/A	N/A
Voltage constant <3>	T2-13	mVs/rad (el.)	YES	YES	YES	N/A	N/A	N/A	N/A
Voltage constant <3>	T2-14	mVmin (mech.)	YES	YES	YES	N/A	N/A	N/A	N/A
Tuning pull-in current	T2-15	A	N/A	N/A	N/A	YES	YES	N/A	N/A
PG Number of pulses per revolution	T2-16	-	YES <4>	N/A	YES <4>	N/A	YES <4>	N/A	N/A
Z Pulse Offset	T2-17	deg (mech.)	YES <4>	N/A	YES <4>	N/A	YES <4>	N/A	N/A

上正科技有限公司
購買・維修 此手冊零組件
電話：037-456333
Email: service@repairtw.com
Line Id: @zzzz
www.repairtw.com

<1> Input the motor code when using the YASKAWA motor. Select FFFF when using the motor by other manufacturers.
<2> T2-02 is not available.
<3> Only parameter T2-13 or T2-14 has to be input. Select one and leave the other empty.
<4> Input data is needed for CLV/PM only.

■ Inertia Tuning and Speed Control Loop Auto-Tuning

Inertia Tuning can be performed when the drive is using Closed Loop Vector control for either IM or PM motors. Inertia Tuning automatically calculates load and motor inertia, and optimizes settings related to the KEB Ride-Thru function (KEB 2) and Feed Forward control.

ASR Gain Auto-Tuning performs the same operation as Inertia Tuning, but also optimizes speed control loop settings.

Table 4.23 Inertia and Speed Control Loop Tuning

Type	Setting		Application Conditions and Benefits	Control Mode	
	IM Motor	PM Motor		CLV	CLV/PM
Inertia Tuning	T1-01 = 8	T2-01 = 8	Lets the motor rotate at a certain speed and applies a test signal. The response to the test signals are analyzed, and adjustments are made to parameters controlling the Feed Forward and KEB Ride-Thru functions (KEB 2, L2-29 = 1).	YES	YES
ASR Gain Auto-Tuning	T1-01 = 9	T2-01 = 9	Performs the same operation as Inertia Tuning, but also adjusts the ASR gain according to the response to the test signal.	YES	YES

Table 4.24 explains that data that must be entered in order to perform the Inertia Tuning and ASR Gain Auto-Tuning. Refer to *Auto-Tuning for Permanent Magnet Motors on page 110* for details.

Table 4.24 Auto-Tuning Input Data

Input Value	Input Parameter	Unit	Tuning Type (T1-01 or T2-01)	
			8 Inertia Tuning	9 ASR Gain Tuning
Test signal frequency	T3-01	Hz	YES	YES
Test signal Amplitude	T3-02	rad	YES	YES
Motor inertia	T3-03	kgm^2	YES	YES
System response frequency	T3-04	Hz	N/A	YES

◆ Before Auto-Tuning the Drive

Check the items below before Auto-Tuning the drive.

■ Basic Auto-Tuning Preparations

- Auto-Tuning requires the user to input data from the motor nameplate or motor test report. Make sure this data is available before Auto-Tuning the drive.
- For best performance, the drive input supply voltage must be greater than the motor rated voltage.

  Note: Better performance is possible when using a motor with a base voltage that is 20 V (40 V for 400 V class models) lower than the input supply voltage. This is particularly important when operating the motor above 90% of base speed, where high torque precision is required.
- To cancel Auto-Tuning, press the STOP key on the digital operator.
- When using a motor contactor, make sure it is closed throughout the Auto-Tuning process.
- When using Auto-Tuning for motor 2, make sure motor 2 is connected to the drive output when performing the tuning.
- *Table 4.25* describes digital input and output terminal operation while Auto-Tuning is executed.

Table 4.25 Digital Input and Output Operation During Auto-Tuning

Motor Type	Auto-Tuning Type	Digital Input	Digital Output
IM Motor	Rotational Auto-Tuning	Digital input functions are disabled.	Functions the same as during normal operation
	Stationary Auto-Tuning 1		Maintains the status at the start of Auto-Tuning
	Stationary Auto-Tuning 2		
	Stationary Auto-Tuning for Line-to-Line Resistance		
	Rotational Auto-Tuning for V/f Control		Functions the same as during normal operation
PM Motor	PM Motor Parameter Settings		Digital output functions are disabled.
	PM Stationary Auto-Tuning		Maintains the status at the start of Auto-Tuning
	PM Stationary Auto-Tuning for Stator Resistance		
	Z Pulse Offset Tuning		
IM and PM Motors	Inertia Tuning		Functions the same as during normal operation
	ASR Gain Auto-Tuning		

上正科技有限公司
購買、維修 此手冊零組件
037-466333
Email: service@repairtw.com
@zzzz
www.repairtw.com

■ Notes on Rotational Auto-Tuning

- To achieve optimal performance from Rotational Auto-Tuning, the load should be decoupled from the motor. Rotational Auto-Tuning is best suited for applications requiring high performance over a wide speed range.
- If motor and load can not be decoupled, reduce the load so that it is no greater than 30% of the rated load. Performing Rotational Auto-Tuning with a higher load will set motor parameters incorrectly, and can cause irregular motor rotation.
- Ensure the motor-mounted brake is fully released if installed.
- Connected machinery should be allowed to rotate the motor.

■ Notes on Stationary Auto-Tuning

Stationary Auto-Tuning modes analyze motor characteristics by injecting current into the motor for about one minute.

WARNING! *Electrical Shock Hazard. When executing stationary Auto-Tuning, the motor does not rotate, however, power is applied. Do not touch the motor until Auto-Tuning is completed. Failure to comply may result in injury from electrical shock.*

WARNING! *Sudden Movement Hazard. If installed, do not release the mechanical brake during stationary Auto-Tuning. Inadvertent brake release may cause damage to equipment or injury to personnel. Ensure that the mechanical brake release circuit is not controlled by the drive multi-function digital outputs.*

Stationary Auto-Tuning 1 and 2

- Perform these tuning methods when using a vector control mode but Rotational Auto-Tuning cannot be performed.
- Check the area around the motor to ensure that nothing will accidentally cause the motor to rotate during the Auto-Tuning process.

- Use Stationary Auto-Tuning 1 when the motor test report is not available. If the motor test report is available, perform Stationary Auto-Tuning 2 instead.

Stationary Auto-Tuning for Line-to-Line Resistance and PM Motor Stator Resistance

- Perform when entering motor data manually while using motor cables longer than 50 m.
- If the motor cables have been replaced with line over 50 m long after Auto-Tuning as already been performed, then execute Stationary Auto-Tuning for line-to-line resistance.

■ Notes on Inertia Tuning and ASR Gain Auto-Tuning

WARNING! *Electrical Shock Hazard. When executing Inertia Tuning or ASR Gain Auto-Tuning, voltage is applied to the motor even before it rotates. Do not touch the motor until Auto-Tuning is completed. Failure to comply may result in injury from electrical shock.*

- Both tuning methods must be performed with the machine connected to the motor but without load applied.
- The motor will rotate during the Auto-Tuning process. Make sure the areas around the motor and connected machinery are clear.
- The drive will let the system rotate at a certain speed while superimposing a sine wave test signal. Make sure this tuning process does not cause any problem or malfunction in the machine before using it.
- Ensure the motor-mounted brake is fully released if installed.
- Connected machinery should be allowed to rotate the motor.

◆ Auto-Tuning Interruption and Fault Codes

If tuning results are abnormal or the STOP key is pressed before completion, Auto-Tuning will be interrupted and a fault code will appear on the digital operator.



A – During Auto-Tuning **B – Auto-Tuning Aborted**

Figure 4.16 Auto-Tuning Aborted Display

上正科技有限公司
精密維修 此手冊零組件
電話: 037-466333
Email: service@repairtw.com
Line id: @zzzz
www.repairtw.com

◆ Auto-Tuning Operation Example

The following example demonstrates Rotational Auto-Tuning when using OLV (A1-02 = 2) and CLV (A1-02 = 3).

■ Selecting the Type of Auto-Tuning

	Step		Display/Result
1.	Turn on the power to the drive. The initial display appears.	➡	- MODE - DRV Rdy FREF (OPR) U1-01= 0.00Hz U1-02= 0.00Hz LSEQ U1-03= 0.00A LREF JOG FWD FWD/REV
2.	Press the ∧ or ∨ key until the Auto-Tuning display appears.	➡	- MODE - PRG Auto-Tuning AUTO HELP FWD DATA
3.	Press ENTER to begin setting parameters.	➡	- A.TUNE - PRG Tuning Mode Sel T1-01= 0 *0* Standard Tuning ESC FWD DATA
4.	Press ENTER to select the value for T1-01. <I>	➡	- A.TUNE - PRG Tuning Mode Sel T1-01= 0 *0* Standard Tuning "0" ← FWD →

Step			Display/Result
5.	Save the setting by pressing ENTER.	→	Entry Accepted
6.	The display automatically returns to the display shown in Step 3.	→	- A.TUNE - PRG Tuning Mode Sel T1-01= 0 *0* Standard Tuning ESC FWD DATA

<1> T1-00 will appear on the display when one of the multi-function inputs has been set to switch between motor 1 and motor 2 (H1-□□ = 16).

■ Enter Data from the Motor Nameplate

After selecting the type of Auto-Tuning, enter the data required from the motor nameplate.

Note: These instructions continue from Step 6 in "Selecting the Type of Auto-Tuning".

Step			Display/Result
1.	Press ∧ to access the motor output power parameter T1-02.	→	- A.TUNE - PRG Mtr Rated Power T1-02= 0.75kW (0.00 ~ 650.00) "0.75kW" ESC FWD DATA
2.	Press ENTER to view the default setting.	→	- A.TUNE - PRG Mtr Rated Power T1-02= 00.75kW (0.00 ~ 650.00) "0.75kW" ← FWD →
3.	Press F1 (left), F2 (right), RESET, ∧ and ∨ to enter the motor power nameplate data in kW.	→	- A.TUNE - PRG Mtr Rated Power T1-02= 000.40kW (0.00 ~ 650.00) "0.75kW" ← FWD →
4.	Press ENTER to save the setting.	→	Entry Accepted
5.	The display automatically returns to the display in Step 1.	→	- A.TUNE - PRG Mtr Rated Power T1-02= 0.40kW (0.00 ~ 650.00) "0.75kW" ESC FWD DATA
6.	Repeat Steps 1 through 5 to set the following parameters: • T1-03, Motor Rated Voltage • T1-04, Motor Rated Current • T1-05, Motor Base Frequency • T1-06, Number of Motor Poles • T1-07, Motor Base Frequency • T1-09, Motor No-Load Current (Stationary Auto-Tuning 1 or 2 only) • T1-10, Motor Rated Slip (Stationary Auto-Tuning 2 only)	→	- A.TUNE - PRG Rated Voltage T1-03= 200.0VAC (0.0 ~ 255.0) "200.0VAC" ESC FWD DATA ⋮ - A.TUNE - PRG Mtr Rated Slip T1-10= X.XX Hz (0.00 ~ 20.00) "X.XX Hz" ESC FWD DATA

Note: **1.** For details on each setting, *Refer to Parameter Settings during Induction Motor Auto-Tuning: T1 on page 114*.
2. To execute Stationary Auto-Tuning for line-to-line resistance only, set parameters T1-02 and T1-04.

上正科技有限公司
購買、維修 此手冊零組件
電話： 037-466333
Email: service@repairtw.com
Line id: @zzzz
www.repairtw.com

■ Starting Auto-Tuning

WARNING! *Sudden Movement Hazard. The drive and motor may start unexpectedly during Auto-Tuning, which could result in death or serious injury. Ensure the area surrounding the drive motor and load are clear before proceeding with Auto-Tuning.*

WARNING! *Electrical Shock Hazard. High voltage will be supplied to the motor when Stationary Auto-Tuning is performed even with the motor stopped, which could result in death or serious injury. Do not touch the motor until Auto-Tuning has been completed.*

NOTICE: *Rotational Auto-Tuning will not function properly if a holding brake is engaged on the load. Failure to comply could result in improper operation of the drive. Ensure the motor can freely spin before beginning Auto-Tuning.*

Enter the required information from the motor nameplate. Press ENTER to proceed to the Auto-Tuning start display.

Note: These instructions continue from Step 7 in “Enter Data from the Motor Nameplate”.

Step			Display/Result
1.	After entering the data listed on the motor nameplate, press ENTER to confirm.	→	- A.TUNE - DRV Auto-Tuning 0.00 Hz/ 0.00A Tuning Ready ? Press RUN key ESC FWD
2.	Press RUN to activate Auto-Tuning. The drive begins by injecting current into the motor for about 1 min, and then starts to rotate the motor. **Note:** The first digit on the display indicates which motor is undergoing Auto-Tuning (motor 1 or motor 2). The second digit indicates the type of Auto-Tuning being performed.	→	- A.TUNE - DRV Rdy Tune Proceeding X.XX Hz/ X.XXA <<<<<< >>>>>> FWD
3.	Auto-Tuning finishes in approximately one to two minutes.	→	- MODE - DRV End Tune Successful FWD RESET

上正科技有限公司
購買、維修 此手冊零組件
電話： 037-466333
Email: service@repairtw.com
Line id: @zzzz
www.repairtw.com

◆ Parameter Settings during Induction Motor Auto-Tuning: T1

The T1-☐☐ parameters are used to set the Auto-Tuning input data for induction motor tuning.

Note: For motors that are to be operated in the field weakening range, first perform the Auto-Tuning with the base data. After Auto-Tuning is complete, change the maximum frequency E1-04 to the desired value.

■ T1-00: Motor 1/Motor 2 Selection

Selects the motor to be tuned when motor 1/2 switching is enabled, i.e., a digital input is set for function H1-☐☐ = 16. This parameter is not displayed if motor 1/2 switching is disabled.

No.	Name	Setting Range	Default
T1-00	Motor 1/Motor 2 Selection	1 or 2	1

Setting 1: Motor 1

Auto-Tuning automatically sets parameters E1-☐☐ and E2-☐☐ for motor 1.

Setting 2: Motor 2

Auto-Tuning automatically sets parameters E3-☐☐ and E4-☐☐ for motor 2. Make sure that motor 2 is connected to the drive for Auto-Tuning.

■ T1-01: Auto-Tuning Mode Selection

Sets the type of Auto-Tuning to be used. *Refer to Auto-Tuning for Induction Motors on page 109* for details on the different types of Auto-Tuning.

No.	Name	Setting Range	Default
T1-01	Auto-Tuning Mode Selection	2, 3 (V/f, V/f w/PG) 0 to 2, 4 (OLV, CLV) 8, 9 (CLV)	2 (V/f, V/f w/PG) 0 (OLV, CLV)

Setting 0: Rotational Auto-Tuning
Setting 1: Stationary Auto-Tuning 1
Setting 2: Stationary Auto-Tuning for Line-to-Line Resistance
Setting 3: Rotational Auto-Tuning for V/f Control
Setting 4: Stationary Auto-Tuning 2
Setting 8: Inertia Tuning
Setting 9: ASR Gain Auto-Tuning

■ T1-02: Motor Rated Power

Sets the motor rated power according to the motor nameplate value.

No.	Name	Setting Range	Default
T1-02	Motor Rated Power	0.00 to 650.00 kW	Determined by o2-04 and C6-01

■ T1-03: Motor Rated Voltage

Sets the motor rated voltage according to the motor nameplate value. If the motor to be operated above its base speed, enter the voltage at base speed here.

For better control precision around rated speed when using a vector control mode, it can be helpful to enter the no-load voltage for the motor here. The motor's "no-load voltage" refers to the voltage needed to operate the motor under no-load conditions at rated speed. The no-load voltage can usually be found in the motor test report available from the manufacturer. If no data is available, enter approximately 90% of the rated voltage printed on the motor nameplate. Note that this might increase the output current reducing the overload margin.

上正科技有限公司
購買、維修 此手冊零組件
電話： 037-408393
Email: service@repairtw.com
Line id: @zzzz
www.repairtw.com

No.	Name	Setting Range	Default
T1-03 <1>	Motor Rated Voltage	0.0 to 255.5 V	200.0 V

<1> Values shown here are for 200 V class drives. Double values when using a 400 V class unit.

■ T1-04: Motor Rated Current

Sets the motor rated current according to the motor nameplate value. For optimal performance in OLV or CLV, the motor rated current should be between 50 and 100% of the drive rated current. Enter the current at the motor base speed.

No.	Name	Setting Range	Default
T1-04	Motor Rated Current	10 to 200% of drive rated current	E2-11 (E4-11)

■ T1-05: Motor Base Frequency

Sets the motor rated frequency according to the motor nameplate value. If a motor with an extended speed range is used or the motor is used in the field weakening area, enter the maximum frequency to E1-04 (E3-04 for motor 2) after Auto-Tuning is complete.

No.	Name	Setting Range	Default
T1-05	Motor Base Frequency	0.0 to 400.0 Hz	50.0 Hz

■ T1-06: Number of Motor Poles

Sets the number of motor poles according to the motor nameplate value.

No.	Name	Setting Range	Default
T1-06	Number of Motor Poles	2 to 48	4

■ T1-07: Motor Base Speed

Used to set the motor rated speed according to the motor nameplate value. If a motor with an extended speed range is used or the motor is used in the field weakening area, enter the speed at base frequency here.

No.	Name	Setting Range	Default
T1-07	Motor Base Speed	0 to 24000 r/min	1450 r/min

■ T1-08: PG Number of Pulses Per Revolution

Sets the number of pulses from the PG encoder. Set the actual number of pulses for one full motor rotation.

No.	Name	Setting Range	Default
T1-08	PG Number of Pulses Per Revolution	0 to 60000 ppr	1024 ppr

Note: T1-08 will only be displayed in CLV.

■ T1-09: Motor No-Load Current

Sets the no-load current for the motor.

The default setting displayed is no-load current that was automatically calculated from the output power set in T1-02 and the motor rated current set to T1-04. Enter the data listed on the motor test report. Leave this data at the default setting if the motor test report is not available.

No.	Name	Setting Range	Default
T1-09 <1>	Motor No-Load Current	0 A to [T1-04] (Max: 0 to 2999.9)	–

<1> This value's number of decimal places depends on the drive model and the Heavy/Normal duty selection in parameter C6-01. The value will have two decimal places (0.01 A) if the drive is set for a Maximum Applicable Motor Capacity up to 11 kW (refer to *Table A.2* and *Table A.3*) and one decimal place (0.1 A) if the set Maximum Applicable Motor Capacity is higher than 11 kW.

■ T1-10: Motor Rated Slip

Sets the rated slip for the motor.

The default setting displayed is the motor rated slip for a Yaskawa motor calculated from the output power set in T1-02. Enter the data listed on the motor test report.

上正科技有限公司
購買、維修 此手冊零組件
電話: 037-466333
Email: service@repairtw.com
Line Id: @zzzz
www.repairtw.com

No.	Name	Setting Range	Default
T1-10	Motor Rated Slip	0.00 to 20.00 Hz	–

■ T1-11: Motor Iron Loss

Provides iron loss information for determining the Energy Saving coefficient. T1-11 will first display a value for the motor iron loss that the drive automatically calculated the when motor capacity was entered to T1-02. If the motor test report is available, enter the motor iron loss value listed there.

No.	Name	Setting Range	Default
T1-11	Motor Iron Loss	0 to 65535 W	E2-11 (E4-11)

◆ Parameter Settings during PM Motor Auto-Tuning: T2

The T2-☐☐ parameters are used to set the Auto-Tuning input data for PM motor tuning.

■ T2-01: PM Motor Auto-Tuning Mode Selection

Selects the type of Auto-Tuning to be performed. *Refer to Auto-Tuning for Permanent Magnet Motors on page 110* for details on different types of Auto-Tuning.

No.	Name	Setting Range	Default
T2-01	PM Motor Auto-Tuning Mode Selection	0 to 2 (OLV/PM, AOLV/PM) 0 to 3, 8, 9 (CLV/PM)	0

0: PM Motor Parameter Settings
1: PM Stationary Auto-Tuning
2: PM Stationary Auto-Tuning for Stator Resistance
3: Z-Pulse Offset Tuning
8: Inertia Tuning
9: ASR Gain Auto-Tuning

■ T2-02: PM Motor Code Selection

If the drive is operating a Yaskawa PM motor from the SMRA, SSR1, or SST4 series, enter the motor code for the motor in parameter T2-02. This will automatically set parameters T2-03 through T2-14. If using a specialized motor or one designed by a manufacturer other than Yaskawa, set T2-02 to FFFF. Data from the motor nameplate or the motor test report will then need to be entered as prompted.

Only the designated PM motor codes may be entered. The PM motor codes accepted by the drive will differ by the control mode that has been selected. Refer to *E5: PM Motor Settings on page 204* for motor codes.

No.	Name	Setting Range	Default
T2-02	PM Motor Code Selection	0000 to FFFF	Depending on A1-02 and o2-04

■ T2-03: PM Motor Type

Selects the type of PM motor the drive will operate.

No.	Name	Setting Range	Default
T2-03	PM Motor Type	0, 1	1

0: IPM motor
1: SPM motor

上正科技有限公司
購買、維修 此手冊零組件
電話： 037-466333
Email: service@repairtw.com
Line Id: @zzzz
www.repairtw.com

■ T2-04: PM Motor Rated Power

Specifies the motor rated power in kilowatts.

No.	Name	Setting Range	Default
T2-04	PM Motor Rated Power	0.00 to 650.00 kW	Depending on o2-04

■ T2-05: PM Motor Rated Voltage

Sets the motor rated voltage.

No.	Name	Setting Range	Default
T2-05 <1>	PM Motor Rated Voltage	0.0 to 255.0 V	200.0 V

<1> The setting range and default value shown here is for a 200 V class drive. These values double when using a 400 V class unit.

■ T2-06: PM Motor Rated Current

Enter the motor rated current in amps.

No.	Name	Setting Range	Default
T2-06	PM Motor Rated Current	10% to 200% of the drive rated current.	Depending on o2-04

■ T2-07: PM Motor Base Frequency

Enter the motor base frequency in Hz.

Note: T2-07 will be displayed when in OLV/PM.

No.	Name	Setting Range	Default
T2-07	PM Motor Base Frequency	0.0 to 400.0 Hz	87.5 Hz

■ T2-08: Number of PM Motor Poles

Enter the number of motor poles.

No.	Name	Setting Range	Default
T2-08	Number of PM Motor Poles	2 to 48	6

■ T2-09: PM Motor Base Speed

Enter the motor rated speed in r/min.

Note: T2-09 will be displayed when in AOLV/PM and CLV/PM.

No.	Name	Setting Range	Default
T2-09	PM Motor Base Speed	0 to 24000 r/min	1750 r/min

■ T2-10: PM Motor Stator Resistance

Enter the motor stator resistance per motor phase.

No.	Name	Setting Range	Default
T2-10	PM Motor Stator Resistance	0.000 to 65.000 Ω	Depending on T2-02

■ T2-11: PM Motor d-Axis Inductance

Enter the d axis inductance per motor phase.

No.	Name	Setting Range	Default
T2-11	PM Motor d-Axis Inductance	0.00 to 600.00 mH	Depending on T2-02

上誌科技有限公司
購買、維修 此手冊零組件
電話： 037-466333
Email: service@repair-tw.com
Line id: @zzzz
www.repair-tw.com

■ T2-12: PM Motor q-Axis Inductance

Enter the q axis inductance per motor phase.

No.	Name	Setting Range	Default
T2-12	PM Motor q-Axis Inductance	0.00 to 600.00 mH	Depending on T2-02

■ T2-13: Induced Voltage Constant Unit Selection

Selects the units used for setting the induced voltage coefficient.

No.	Name	Setting Range	Default
T2-13	Induced Voltage Constant Unit Selection	0, 1	1

0: mV (r/min)
1: mV (rad/sec)

Note: If T2-13 is set to 0, then the drive will use E5-24 (Motor Induction Voltage Constant 2), and will automatically set E5-09 (Motor Induction Voltage Constant 1) to 0.0. If T2-13 is set to 1, then the drive will use E5-09 and will automatically set E5-25 to 0.0.

■ T2-14: PM Motor Induced Voltage Constant (Ke)

Enter the motor induced voltage constant (Ke).

No.	Name	Setting Range	Default
T2-14	PM Motor Induced Voltage Constant	0.1 to 2000.0	Depending on T2-02

■ T2-15: Pull-In Current Level for PM Motor Tuning

Sets the amount of pull-in current used to tune the d-axis and q-axis inductance. Set as a percentage of the motor rated current.

No.	Name	Setting Range	Default
T2-15	Pull-In Current Level for PM Motor Tuning	0 to 120%	30%

■ T2-16: PG Number of Pulses Per Revolution for PM Motor Tuning

Enter the number of pulses from the PG encoder per motor rotation. Set the actual number of pulses for one full motor rotation.

No.	Name	Setting Range	Default
T2-16	PG Number of Pulses Per Revolution for PM Motor Tuning	0 to 60000 ppr	1024 ppr

■ T2-17: Encoder Z-Pulse Offset (Δθ)

Sets the amount of compensation or offset in 0.1 degree units in order to fine-tune the home position. If the amount of offset needed for the Z pulse is unknown or if the PG encoder is replaced, perform Z pulse tuning.

No.	Name	Setting Range	Default
T2-17	Encoder Z-Pulse Offset	-180.0 to 180.0 deg	0.0 deg

◆ Parameter Settings during Inertia and Speed Control Loop Auto-Tuning: T3

These tuning methods apply a sine wave test signal to the system. By the measuring the response the drive estimates the system inertia. It automatically sets parameters listed in *Table 4.26*.

Table 4.26 Parameters Adjusted by Inertia and Speed Loop Auto-Tuning

Parameter	Description	T1-01 or T2-01	
		8 Inertia Tuning	9 Speed Control Loop (ASR) Tuning
C5-01	ASR Proportional Gain 1	N/A	YES
C5-17 (C5-37)	Motor Inertia	YES	YES
C5-18 (C5-38)	Motor Inertia Ratio	YES	YES
L3-24	Motor Acceleration Time for Inertia Calculations	YES	YES
L3-25	Load Inertia Ratio	YES	YES
n5-03	Feed Forward Control Ratio Gain	YES	YES

三正科技有限公司
購買、維修此手冊零組件
電話： 037-466333
Email： service@repairtw.com
Line Id： @2222
http://www.repairtw.com

■ T3-01: Inertia Tuning Frequency Reference

Sets the frequency of the test signal applied to the motor during Inertia Tuning. Although this setting rarely needs to be changed, increasing the value may be beneficial when working with high inertia loads.

No.	Name	Setting Range	Default
T3-01	Inertia Tuning Frequency Reference	0.1 to 20.0 Hz	3.0 Hz

■ T3-02: Inertia Tuning Reference Amplitude

Enter the amplitude of the test signal applied to the motor during Inertia Tuning. Although this setting rarely needs to be changed, try decreasing the value if the load inertia is too large and causes problems during Inertia Tuning. If a fault occurs when T3-01 is set to low value, the situation may be remedied by adjusting T3-02.

No.	Name	Setting Range	Default
T3-02	Inertia Tuning Reference Amplitude	0.1 to 10.0 rad	0.5 rad

■ T3-03: Motor Inertia

Enter the inertia of the motor. This value is used to determine the load inertia using the test signal response. The default setting is for a Yaskawa standard motor as listed in the motor inertia table.

No.	Name	Setting Range	Default
T3-03	Motor Inertia	0.0001 to 600.00 kgm^2	Depending on E2-11

Note: The display resolution depends on the rated output power of the drive after the Drive Duty has been set in parameter C6-01. Drives with a maximum output up to 37 kW will display this value in units of 0.0001 kgm^2. Drives with a maximum output 37 to 185 kW will display this value in units of 0.001 kgm^2. *Refer to A1000 Model Selection on page 27* for details.

■ T3-04: ASR Response Frequency

Sets the response frequency (reciprocal of the step response time constant) of the system or the connected machine. The drive uses this value and the load inertia to fine-tune the speed control loop gain (C5-01, ASR Gain 1). Oscillation may result if the value input here is higher than the actual response frequency of the system.

No.	Name	Setting Range	Default
T3-04	ASR Response Frequency	0.1 to 50.0 Hz	10.0 Hz

上正科技有限公司
購買、維修 此手冊零組件
電話： 037-466333
Email: service@repairtw.com
Line id: @zzzz
www.repairtw.com

4.8 No-Load Operation Test Run

◆ No-Load Operation Test Run

This section explains how to operate the drive with the motor decoupled from the load during a test run.

■ Before Starting the Motor

Check the following items before operation:

- Ensure the area around the motor is safe.
- Ensure external emergency stop circuitry is working properly and other safety precautions have been taken.

■ During Operation

Check the following items during operation:

- The motor should rotate smoothly (i.e., no abnormal noise or oscillation).
- The motor should accelerate and decelerate smoothly.

■ No-Load Operation Instructions

The following example illustrates a test run procedure using the digital operator.

Note: Before starting the motor, set the frequency reference d1-01 to 6 Hz.

Step			Display/Result
1.	Turn on the power to the drive. The initial display appears.	→	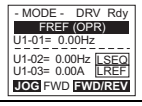
2.	Press the LO/RE key to select LOCAL. The LO/RE light will turn on.	→	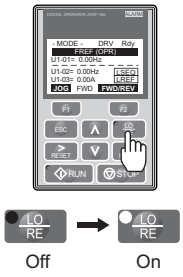
3.	Press RUN to give the drive a Run command. RUN will light and the motor will rotate at 6 Hz.	→	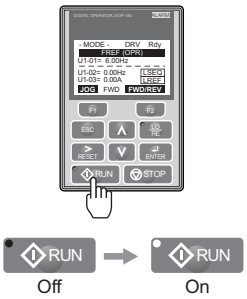
4.	Ensure the motor is rotating in the correct direction and that no faults or alarms occur.	→	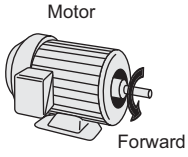
5.	If there is no error in step 4, press ∧ to increase the frequency reference. Increase the frequency in increments of 10 Hz, verifying smooth operation at all speeds. For each frequency, check the drive output current using monitor U1-03. The current should be well below the motor rated current.		

上正科技有限公司
購買・維修 此手冊零組件
電話： 037-466333
Email: service@repairtw.com
Line id: @zzzz
www.repairtw.com

Step			Display/Result
6.	The drive should operate normally. Press STOP to stop the motor. RUN flashes until the motor comes to a complete stop.	➡	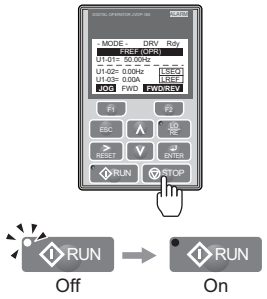

上正科技有限公司
購買、維修 此手冊零組件
電話： 037-466333
Email: service@repairtw.com
Line id: @zzzz
www.repairtw.com

4.9 Test Run with Load Connected

◆ Test Run with the Load Connected

After performing a no-load test run, connect the motor and proceed to run the motor and load together.

■ Notes on Connected Machinery

- Clear the area around the motor.
- The motor should come to a complete stop without problems.
- Connect the load and machinery to the motor.
- Fasten all installation screws properly. Check that the motor and connected machinery are held in place.
- Confirm that the Fast Stop circuit or mechanical safety measures operate correctly.
- Be ready to press the STOP button in case of emergency.

■ Checklist Before Operation

- The motor should rotate in the proper direction.
- The motor should accelerate and decelerate smoothly.

■ Operating the Motor under Loaded Conditions

Test run the application similarly to the no-load test procedure when connecting the machinery to the motor.

- Watch monitor parameter U1-03 during operation to ensure there is no overcurrent.
- If the application permits running the load in the reverse direction, try changing motor direction and the frequency reference while watching for abnormal motor oscillation or vibration.
- Correct any problems that occur with hunting, oscillation, or other control-related issues.

上正科技有限公司
購買、維修 此手冊零組件
電話： 037-466333
Email: service@repairtw.com
Line id: @zzzz
www.repairtw.com

4.10 Verifying Parameter Settings and Backing Up Changes

Use the Verify Menu to check all changes to parameter settings. *Refer to Verifying Parameter Changes: Verify Menu on page 94*.

Save the verified parameter settings. Change the access level or set a password to the drive to prevent accidental modification of parameter settings.

◆ Backing Up Parameter Values: o2-03

The following procedure saves all parameters settings to drive memory where they can later be recalled. Set o2-03 to "1" to save parameter changes. This saves all parameter settings, and then returns o2-03 to 0. The drive can now "recall" the saved parameters by performing a User Initialization (A1-03 = 1110).

No.	Parameter Name	Description	Setting Range	Default Setting
o2-03	User Parameter Default Value	Lets the user create a set of default settings for a User Initialization. 0: Saved/Not set 1: Set Defaults - Saves current parameter settings as the default values for a User Initialization. 2: Clear All - Clears the currently saved user settings. After saving the user parameter set value, the items of 1110 (User Parameter Initialize) are displayed in A1-03 (User Parameter Default Value).	0 to 2	0
A1-03	Initialize Parameters	Selects a method to initialize the parameters. 0: No Initialize 1110: User Initialization (The user must first program and store desired settings using parameter o2-03) 2220: 2-Wire Initialization (parameter initialized prior to shipment) 3330: 3-Wire Initialization 5550: oPE4 Fault reset	0 to 5550	0

◆ Parameter Access Level: A1-01

Setting the Access Level for "Operation only" (A1-01 = 0) allows the user to access parameters A1-□□ and U□-□□ only. Other parameters are not displayed.

Setting the Access Level for "User Parameters" (A1-01 = 1) allows the user to access only the parameters that have been previously saved as User Parameters. This is helpful when displaying only the relevant parameters for a specific application.

大平科技有限公司
購買、維修 此手冊零組件
電話: 037-466333
Email: service@repairtw.com
Line id: @zzzz
www.repairtw.com

No.	Parameter Name	Description	Setting Range	Default
A1-01	Access Level Selection	Selects which parameters are accessible via the digital operator. 0: Operation only. A1-01, A1-04, and A1-06 can be set and monitored, U□-□□ parameters can also be viewed. 1: User Parameters. Only those recently changed among application parameters A2-01 to A2-16 and A2-17 to A2 -32 can be set and monitored. 2: Advanced Access Level. All parameters can be set and monitored.	0 to 2	2
A2-01 to A2-32	User Parameters 1 to 32	Parameters selected by the user are saved as User Parameters. This includes recently viewed parameters or parameters specifically selected for quick access. If parameter A2-33 is set to 1, recently viewed parameters will be listed between A2-17 and A2-32. Parameters A2-01 through A2-16 must be manually selected by the user. If A2-33 is set to 0, then recently viewed parameters will not be saved to the group of User Parameters. A2-□□ parameters are now available for manual programming.	b1-01 to o□-□□	–
A2-33	User Parameter Automatic Selection	0: Parameters A2-01 through A2-32 are reserved for the user to create a list of User Parameters. 1: Save history of recently viewed parameters. Recently edited parameters will be saved to A2-17 through A2-32 for quick access. The most recently changed parameter is saved to A2-17. The second most recently changed parameter is saved to A2-18.	0, 1	1

◆ Password Settings: A1-04, A1-05

The user can set a password to the drive to restrict access. The password is selected via parameter A1-05. The password must be entered to A1-04 to unlock parameter access (i.e., parameter setting A1-04 must match the value programmed into A1-05). The following parameters cannot be viewed or edited until the value entered to A1-04 correctly matches the value set to A1-05: A1-01, A1-02, A1-03, A1-06, and A2-01 through A2-33.

Note: Parameter A1-05 is hidden from view. To display A1-05, access parameter A1-04 and simultaneously press the STOP key and the ∧ key.

◆ Copy Function

Parameter settings can be copied to another drive to simplify parameter restoration or multiple drive setup. The drive supports the following copy options:

- **LCD Operator (standard in all models)**
  The LCD operator used to operate the drive also supports copying, importing, and verifying parameter settings. *Refer to o3: Copy Function on page 287* for details.
- **USB Copy Unit and CopyUnitManager**
  The copy unit is an external option connected to the drive to copy parameter settings from one drive and save those settings to another drive. Refer to the manual supplied with the USB Copy Unit for instructions.
  The CopyUnitManager is a PC software tool. It allows the user to load parameter settings from the Copy Unit onto a PC, or from the PC onto a Copy Unit. This is useful when managing parameters for various drives or applications. Refer to the manual supplied with the CopyUnitManager for instructions.
- **DriveWizard Plus**
  DriveWizard is a PC software tool for parameter management, monitoring, and diagnosis. DriveWizard can load, store, and copy drive parameter settings. For details, refer to Help in the DriveWizard software.

上正科技有限公司
購買、維修 此手冊零組件
電話： 037-466333
Email: service@repairtw.com
Line id: @zzzz
www.repairtw.com

4.11 Test Run Checklist

Review the checklist before performing a test run. Check each item that applies.

☑	No.	Checklist	Page
☐	1	Thoroughly read the manual before performing a test run.	–
☐	2	Turn the power on.	*102*
☐	3	Set the voltage for the power supply to E1-01.	*194*
☐	4	Select the correct duty rating (C6-01) for the application.	–

Check the items that correspond to the control mode being used.

WARNING! *Ensure start/stop and safety circuits are wired properly and in the correct state before energizing the drive. Failure to comply could result in death or serious injury from moving equipment. When programmed for 3-Wire control, a momentary closure on terminal S1 may cause the drive to start.*

☑	No.	Checklist	Page
V/f Control (A1-02 = 0) and V/f Control with PG (A1-02 = 1)			
☐	5	Select the best V/f pattern according to the application and motor characteristics. Example: If using a motor with a rated frequency of 50.0 Hz, set E1-03 to “0”.	–
☐	6	Perform Rotational Auto-Tuning for V/f Control if using Energy Saving functions.	*109*
V/f Control with PG (A1-02 = 1)			
☐	7	Setup the PG feedback parameters correctly and make sure the encoder pulse counting direction is correct.	*206*
☐	8	Set the proportional gain for ASR speed control to C5-01 and the integral time to C5-02.	*173*
Open Loop Vector Control (A1-02 = 2) or Closed Loop Vector Control (A1-02=3)			
☐	9	Perform Auto-Tuning as described.	*114*
Closed Loop Vector Control (A1-02 = 3)			
☐	10	Set the proportional gain for ASR speed control to C5-01 and the integral time to C5-02. Perform ASR Tuning if possible.	*173*
Open Loop Vector Control for PM (A1-02 = 5)			
☐	11	Perform Auto-Tuning as described.	*116*
Advanced Open Loop Vector Control for PM (A1-02 = 6)			
☐	12	Perform Auto-Tuning as described.	*116*
☐	13	Set the proportional gain for ASR speed control to C5-01 and the integral time to C5-02.	*173*
Closed Loop Vector Control for PM (A1-02 = 7)			
☐	14	Perform Auto-Tuning as described.	*116*
☐	15	Set the proportional gain for ASR speed control to C5-01 and the integral time to C5-02. Perform ASR Tuning if possible.	*173*
☐	16	Set the Z pulse offset to or enter the Z manually to parameter E5-11.	*116*

上正科技有限公司
購買 維修 此手冊零組件
電話： 037-466333
Email: service@repairtw.com
Line id: @zzzz
www.repairtw.com

Proceed to the following checklist after checking items 4 through 15.

☑	No.	Checklist	Page
☐	17	The DRV should light after giving a Run command.	–
☐	18	To give a Run command and frequency reference from the digital operator, press LO/RE to set to LOCAL. The LO/RE key will light.	*96*
☐	20	If the motor rotates in the opposite direction during the test run, switch two of the drive output terminals (U/T1, V/T2, W/T3) or change parameter b1-14.	*102*
☐	21	Set the correct values for the motor rated current (E2-01, E4-01, E5-03) and motor protection (L1-01) to ensure motor thermal protection.	–
☐	22	If the Run command and frequency reference are provided via the control circuit terminals, set the drive for REMOTE and be sure the LO/RE light is out.	*96*
☐	23	If the control circuit terminals should supply the frequency reference, select the correct voltage input signal level (0 to 10 V) or the correct current input signal level (4 to 20 mA or 0 to 20 mA).	*136*
☐	24	Set the proper voltage to terminal A1 and A3 (-10 to +10 V).	*136*
☐	25	When current input is used, switch the drive’s built-in DIP switch S1 from the V-side to I-side. Set the level for current signal used to H3-09 (set “2” for 4 to 20 mA, or “3” for 0 to 20 mA).	*136*
☐	26	Set the proper current to terminal A2. (-10 to +10 V, 4 to 20 mA or 0 to 20 mA).	*136*

☑	No.	Checklist	Page
☐	27	If the frequency reference is supplied via one of the analog inputs, make sure the analog input produces the desired frequency reference. Make the following adjustments if the drive does not operate as expected: Gain adjustment: Set the maximum voltage/current signal and adjust the analog input gain (H3-03 for input A1, H3-11 for input A2, H3-07 for analog input A3) until the frequency reference value reaches the desired value. Bias adjustment: Set the minimum voltage/current signal and adjust the analog input bias (H3-04 for input A1, H3-12 for input A2, H3-08 for analog input A3) until the frequency reference value reaches the desired minimum value.	–

上正科技有限公司
購買、維修 此手冊零組件
電話： 037-466333
Email: service@repairtw.com
Line id: @zzzz
www.repairtw.com

上正科技有限公司
購買、維修 此手冊零組件
電話： 037-466333
Email: service@repairtw.com
Line id: @zzzz
www.repairtw.com

5

Parameter Details

5.1 A: INITIALIZATION 130
5.2 B: APPLICATION. 136
5.3 C: TUNING 165
5.4 D: REFERENCE SETTINGS 180
5.5 E: MOTOR PARAMETERS 194
5.6 F: OPTION SETTINGS. 206
5.7 H: TERMINAL FUNCTIONS 214
5.8 L: PROTECTION FUNCTIONS 244
5.9 N: SPECIAL ADJUSTMENTS 275
5.10 O: OPERATOR RELATED SETTINGS 284
5.11 U: MONITOR PARAMETERS 291

上正科技有限公司
購買、維修 此手冊零組件
電話： 037-466333
Email: service@repairtw.com
Line id: @zzzz
www.repairtw.com

5.1 A: Initialization

The initialization group contains parameters associated with initial setup of the drive. Parameters involving the display language, access levels, initialization, and password are located in this group.

◆ A1: Initialization

■ A1-00: Language Selection

Selects the display language for the digital operator.

Note: This parameter is not reset when the drive is initialized using parameter A1-03.

No.	Parameter Name	Setting Range	Default
A1-00	Language Selection	0 to 7	0

Setting 0: English
Setting 1: Japanese
Setting 2: German
Setting 3: French
Setting 4: Italian
Setting 5: Spanish
Setting 6: Portuguese
Setting 7: Chinese

■ A1-01: Access Level Selection

Allows or restricts access to drive parameters.

上正科技有限公司
購買、維修 此手冊零組件
電話： 037-466333
Email: service@repairtw.com
Line id: @zzzz
www.repairtw.com

No.	Parameter Name	Setting Range	Default
A1-01	Access Level Selection	0 to 2	2

Setting 0: Operation only

Access is restricted to parameters A1-01, A1-04, A1-06, and all U monitor parameters.

Setting 1: User Parameters

Access to only a specific list of parameters set to A2-01 through A2-32. These User Parameters can be accessed using the Setup Mode of the digital operator.

Setting 2: Advanced Access Level (A) and Setup Access Level (S)

All parameters can be viewed and edited.

Notes on Parameter Access

- If the drive parameters are password protected by A1-04 and A1-05, parameters A1-00 through A1-03, A1-06, and all A2 parameters cannot be modified.
- If a digital input terminal programmed for “Program lockout” (H1-☐☐ = 1B) is enabled, parameter values cannot be modified, even if A1-01 is set to 1 or 2.
- If parameters are changed via serial communication, then it will not be possible to edit or change parameters settings with the drive’s digital operator until an Enter command is issued to the drive from the serial communication.

■ A1-02: Control Method Selection

Selects the Control Method (also referred to as the “control mode”) the drive uses to operate the motor. If the drive is set up to run two motors, then A1-02 determines the control mode for motor 1.

No.	Parameter Name	Setting Range	Default
A1-02	Control Method Selection	0, 1, 2, 3, 5, 6, 7	0

Control Modes for Induction Motors (IM)

Setting 0: V/f Control for Induction Motors

V/f Control is for simple speed control and multiple motor applications with low demands to dynamic response or speed accuracy. This control mode should be used when the motor parameters are unknown and Auto-Tuning cannot be performed. The speed control range is 1:40.

Setting 1:V/f Control with PG Speed Feedback

For general-purpose applications that do not require high dynamic response but high speed accuracy. This mode should be used if the motor parameters are unknown and Auto-Tuning cannot be performed. The speed control range is 1:40.

Setting 2: Open Loop Vector Control

For general, variable-speed applications with a speed control range of 1:120 that require precise speed control, quick torque response, and high torque at low speed without using a speed feedback signal from the motor.

Setting 3: Closed Loop Vector Control

For general, variable-speed applications that requiring precise speed control down to zero speed, fast torque response, or precise torque control. A speed feedback signal from the motor is required. The speed control range is up to 1:1500.

Control Modes for Permanent Magnet Motors (SPM or IPM)

Setting 5: Open Loop Vector Control for PM

Use this mode for variable torque applications and take advantage of the energy saving capabilities of a PM motor. Using this mode, the drive can control an SPM or IPM motor with a speed range of 1:20.

Setting 6: Advanced Open Loop Vector Control for PM

This control mode can be used to operate an IPM motor for constant torque applications. Using High Frequency Injection, a speed control range as high as 1:100 is possible. Refer to *Control Mode Selection on page 28* for details.

上詮科技有限公司
購買、維修 此手冊零組件
電話： 037 466333
Email: service@repairtw.com
Line id: @zzzz
www.repairtw.com

Setting 7: Closed Loop Vector Control for PM

This mode can be used for high precision control of a PM motor in constant torque or variable torque applications. The speed control range reaches 1:1500. A speed feedback signal is required.

■ A1-03: Initialize Parameters

Resets parameters back to the original default values. After initialization, the setting for A1-03 automatically returns to 0.

No.	Parameter Name	Setting Range	Default
A1-03	Initialize Parameters	0, 1110, 2220, 3330, 5550	0

Setting 1110: User Initialize

Drive parameters are reset to values selected by the user as User Settings. User Settings are stored when parameter o2-03 is set to “1: Set defaults”.

Note: A “user-initialization” resets all parameters to a user-defined set of default values that were previously saved to the drive. To clear the user-defined default values, set parameter o2-03 to 2.

Setting 2220: 2-Wire Initialization

Resets all parameters back to their original default settings with digital inputs S1 and S2 configured as Forward run and Reverse run, respectively. For more on digital input functions, refer to *Setting 40, 41: Forward run, Reverse run command for 2-wire sequence on page 221*.

Setting 3330: 3-Wire Initialization

The drive parameters are returned to factory default values with digital inputs S1, S2, and S5 configured as Run, Stop, and Forward/Reverse respectively. Also refer to digital input functions, *Setting 0: 3-Wire Sequence on page 215*.

Setting 5550: oPE04 Reset

If parameters on a certain drive have been edited and then a different terminal block is installed with different settings saved in its built-in memory, an oPE04 error will appear on the display. To use the parameter settings saved to the terminal block memory, set A1-02 to 5550.

Notes on Parameter Initialization

The parameters shown in *Table 5.1* will not be reset when the drive is initialized by setting A1-03 = 2220 or 3330. Although the control mode in A1-02 is not reset when A1-03 is set to 2220 or 3330, it may change when an application preset is selected.

Table 5.1 Parameters not Changed by Drive Initialization

No.	Parameter Name
A1-00	Language Selection
A1-02	Control Method Selection
C6-01	Duty Selection
E1-03	V/f Pattern Selection
E5-01	Motor Code Selection (for PM motors)
F6-08	Comm. Parameter Reset
L8-35	Installation Selection
o2-04	Drive/kVA Selection

■ A1-04, A1-05: Password and Password Setting

A1-04 is for entering the password when the drive is locked. A1-05 is a hidden parameter used to set the password.

No.	Parameter Name	Setting Range	Default
A1-04	Password	0000 to 9999	0000
A1-05	Password Setting		

How to use the Password

The user can set a password for the drive to restrict access. The password is set to A1-05 and must be entered to A1-04 to unlock parameter access. Until the correct password is entered, the following parameters cannot be viewed or edited: A1-01, A1-02, A1-03, A1-06, and A2-01 through A2-33.

The instructions below demonstrate how to set a new password. Here, the password set is “1234”. An explanation follows on how to enter the password to unlock the parameters.

臣臣科技有限公司
購買、維修 此手冊零組件
電話： 037-466333
Email: service@repairtw.com
Line id: @zzzz
www.repairtw.com

Table 5.2 Setting the Password for Parameter Lock

	Step		Display/Result
1.	Turn on the power to the drive. The initial display appears.	→	- MODE - DRV Rdy FREF (OPR) U1-01= 0.00Hz U1-02= 0.00Hz LSEQ U1-03= 0.00A LREF JOG FWD FWD/REV
2.	Press the ∧ or ∨ key until the Parameter Setting Mode screen appears.	→	- MODE - PRG Programming HELP FWD DATA
3.	Press the ENTER key to enter the parameter menu tree.	→	-PRMSET- PRG Initialization A1-00= 0 Select Language ← FWD →
4.	Select the flashing digits by pressing F1 (left), F2 (right) or RESET.	→	-PRMSET- PRG Select Language A1-00= 0 *0* English ← FWD →
5.	Select A1-04 by pressing ∧.	→	-PRMSET- PRG Enter Password A1-04 = 0 (0~9999) “0” ← FWD →
6.	Press the ∧ key while holding down STOP at the same time. A1-05 will appear. **Note:** Because A1-05 is hidden, it will not be displayed by simply pressing the ∧ key.	→	-PRMSET- PRG Select Password A1-05 = 0 (0~9999) “0” ← FWD → “05” flashes

Step			Display/Result
7.	Press the ENTER key.	→	-PRMSET- PRG Select Password A1- 05 = 0000 (0~9999) "0" ← FWD →
8.	Use F1 (left), F2 (right), RESET, V and ^ to enter the password.	→	-PRMSET- PRG Select Password A1-05= 1234 (0~9999) "0" ← FWD →
9.	Press ENTER to save what was entered.	→	Entry Accepted
10.	The display automatically returns to the display shown in step 5.	→	-PRMSET- PRG Select Password A1- 05 = 1234 (0~9999) "0" ← FWD →

Table 5.3 Check to see if A1-02 is locked (continuing from step 10 above)

Step			Display/Result
1.	Press V to display A1-02.	→	-PRMSET- PRG Control Method A1-02= 2 *2* Open Loop Vector ← FWD → "02" flashes
2.	Press ENTER to make sure that the setting values cannot be selected.		
3.	Press ESC to return to the first display.	→	- MODE - PRG Programming HELP FWD DATA

上正科技有限公司
購買、維修 此手冊零組件
電話： 037-466333
Email: service@repairtw.com
Line id: @zzzz
www.repairtw.com

Table 5.4 Enter the Password to Unlock Parameters (continuing from step 4 above)

Step			Display/Result
1.	Press ENTER to enter the parameter setup display.	→	-PRMSET- PRG Initialization A1-00= 0 Select Language ← FWD →
2.	Press F1 (left), F2 (right) or RESET to select the flashing digits as shown.	→	-PRMSET- PRG Select Language A1-00= 0 *0* English ← FWD → "00" flashes
3.	Press ^ to scroll to A1-04 and ENTER.	→	-PRMSET- PRG Enter Password A1- 04 = 0 (0~9999) "0" ← FWD →
4.	Enter the password "1234".	→	-PRMSET- PRG Enter Password A1- 04 = 1234 (0~9999) "0" ← FWD →
5.	Press ENTER to save the new password.	→	Entry Accepted

Step			Display/Result
6.	Drive returns to the parameter display.	→	-PRMSET- PRG Enter Password A1-04 = 0 (0~9999) "0" FWD
7.	Press V and scroll to A1-02.	→	-PRMSET- PRG Control Method A1-02= 2 *2* Open Loop Vector FWD
8.	Press ENTER to display the value set to A1-02. If the first "2" blinks, parameter settings are unlocked.	→	-PRMSET- PRG Control Method A1-02= 2 *2* Open Loop Vector FWD
9.	Use ^ or V to change the value if desired (though changing the control mode at this point is not typically done).		-PRMSET- PRG Control Method A1-02= 0 *2* V/F Control "2" FWD V/f
10.	Press ENTER to save the setting, or press ESC to return to the previous display without saving changes.	→	Entry Accepted
11.	The display automatically returns to the parameter display.	→	-PRMSET- PRG Control Method A1-02= 0 *0* V/F Control FWD

Note: Parameter settings can be edited after entering the correct password. Performing a 2-wire or 3-wire initialization resets the password to "0000". Reenter the password to parameter A1-05 after drive initialization.

上正科技有限公司
購買、維修 此手冊零組件
電話： 037-466333
Email: service@repairtw.com
Line id: @xxx
www.repairtw.com

■ A1-06: Application Preset

Several Application Presets are available to facilitate drive setup for commonly used applications. Selecting one of these Application Presets automatically programs certain parameters to a new set default values and selects the functions for the I/O terminals that best suit the application. All parameters changed when selecting an Application Preset are also assigned to the list of User Parameters, A2-01 through A2-16. These can be edited more easily in the Setup Mode and provide quicker access by eliminating the need to scroll through multiple menus.

Refer to Application Selection on page 103 for details on parameter A1-06.

■ A1-07: DriveWorksEZ Function Selection

DriveWorksEZ is a software package that can be used to customize the drive functionality or add PLC functionality by the interconnection and configuration of basic software function blocks. The drive performs programs created by the user in 1 ms cycles.

Parameter A1-07 can be used to enable or disable the DriveWorksEZ program inside the drive.

Note: 1. If DriveWorksEZ has assigned functions to any multi-function output terminals, those functions will remain set to those terminals even after disabling DriveWorksEZ.
2. For more information on DriveWorksEZ, contact a Yaskawa representative or the Yaskawa sales department directly.

No.	Parameter Name	Setting Range	Default
A1-07	DriveWorksEZ Function Selection	0 to 2	0

Setting 0: DWEZ disabled
Setting 1: DWEZ enabled
Setting 2: Digital input

If a digital input is programmed for DWEZ enable/disable (H1-☐☐ = 9F), DWEZ will be enabled when the input is disabled.

◆ A2: User Parameters

■ A2-01 to A2-32: User Parameters 1 to 32

The user can select 32 parameters and assign them to A2-01 through A2-32. This saves time later scrolling through the parameter menu. The list of User Parameters can also track the most recently edited settings and save those parameters to this list.

No.	Parameter Name	Setting Range	Default
A2-01 to A2-32	User Parameters 1 to 32	b1-01 to o2-08	Determined by A1-06 <1>

<1> A1-06 determines how parameters edited by the user are saved to the list of Preferred Parameters, A2-01 through A2-32. Refer to *Application Selection on page 103* for details.

Saving User Parameters

To save specific parameters to A2-01 to A2-32, first set the access level to allow access to all parameters (A1-02 = 2). Next assign the parameter number to the User Parameters list by entering it into one of the A2-☐☐ parameters. If A1-01 is then set to 1, the access level can be restricted so that users can only set and refer to the specific parameters saved as User Parameters.

■ A2-33: User Parameter Automatic Selection

A2-33 determines whether or not parameters that have been edited are saved to the User Parameters (A2-17 to A2-32) for quick, easy access.

No.	Parameter Name	Setting Range	Default
A2-33	User Parameter Automatic Selection	0 or 1	Determined by A1-06

上詮科技有限公司
購買、維修 此手冊零組件
電話： 037-466333
Email: service@repairtw.com
Line id: @37733
www.repairtw.com

Setting 0: Do not save list of recently viewed parameters.

To manually select the parameters listed in the User Parameter group, set A2-33 to 0.

Setting 1: Save history of recently viewed parameters.

By setting A2-33 to 1, all parameters that were recently edited will be automatically saved to A2-17 through A2-32. A total of 16 parameters are saved with the most recently edited parameter set to A2-17, the second most recently to A2-18, and so on. User Parameters can be accessed using the Setup Mode of the digital operator.

5.2 b: Application

◆ b1: Operation Mode Selection

■ b1-01: Frequency Reference Selection 1

Use parameter b1-01 to select the frequency reference source 1 for the REMOTE mode.

Note: **1.** If a Run command is input to the drive but the frequency reference entered is 0 or below the minimum frequency, the RUN indicator LED on the digital operator will light and the STOP indicator will flash.
2. Press the LO/RE key to set the drive to LOCAL and use the operator keypad to enter the frequency reference.

No.	Parameter Name	Setting Range	Default
b1-01	Frequency Reference Selection 1	0 to 4	1

Setting 0: Operator keypad

Using this setting, the frequency reference can be input by:

- switching between the multi-speed references in the d1-□□ parameters.
- entering the frequency reference on the operator keypad.

Setting 1: Terminals (analog input terminals)

Using this setting, an analog frequency reference can be entered as a voltage or current signal from terminals A1, A2, or A3.

Voltage Input

Voltage input can be used at any of the three analog input terminals. Make the settings as described in ***Table 5.5*** for the input used.

上正科技有限公司
購買、維修 此手冊零組件
電話： 037-466333
Email: service@repairtw.com
Line id: @zzzz
www.repairtw.com

Table 5.5 Analog Input Settings for Frequency Reference Using Voltage Signals

Terminal	Signal Level	Parameter Settings				Notes
		Signal Level Selection	Function Selection	Gain	Bias	
A1	0 to 10 Vd	H3-01 = 0	H3-02 = 0 (Frequency Reference Bias)	H3-03	H3-04	–
	-10 to +10 Vdc	H3-01 = 1				
A2	0 to 10 Vd	H3-09 = 0	H3-10 = 0 (Frequency Reference Bias)	H3-11	H3-12	Make sure to set DIP switch S1 on the terminal board to “V” for voltage input.
	-10 to +10 Vdc	H3-09 = 1				
A3	0 to 10 Vd	H3-05 = 0	H3-06 = 0 (Frequency Reference Bias)	H3-07	H3-08	Make sure to set DIP switch S4 on the terminal board to “AI”.
	-10 to +10 Vdc	H3-05 = 1				

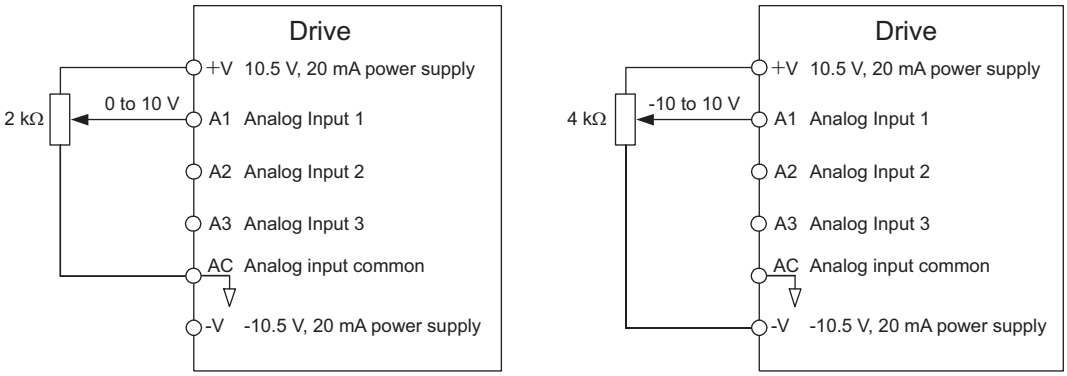

Figure 5.1 Setting the Frequency Reference as a Voltage Signal at Terminal A1

Use the wiring example shown in ***Figure 5.1*** for any other analog input terminals. When using input A2 make sure DIP switch S1 is set for voltage input.

Current Input

Input terminal A2 can accept a current input signal. Refer to *Table 5.6* to set terminal A2 for current input.

Table 5.6 Analog Input Settings for Frequency Reference Using a Current Signal

Terminal	Signal Level	Parameter Settings				Notes
		Signal Level Selection	Function Selection	Gain	Bias	
A2	4 to 20 mA	H3-09 = 2	H3-10 = 0 (Frequency Bias)	H3-11	H3-12	Make sure to set DIP switch S1 on the terminal board to "I" for current input.
	0 to 20 mA	H3-09 = 3				

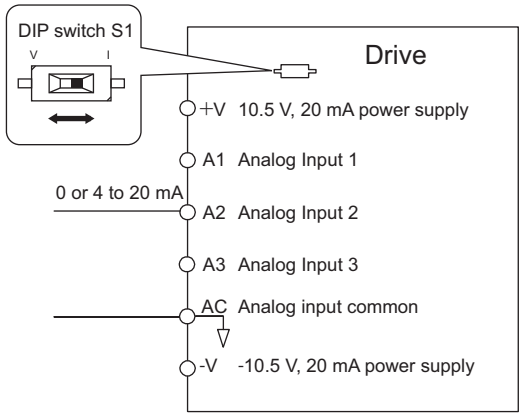

Figure 5.2 Setting the Frequency Reference as a Current Signal to Terminal A2

DIP switch S1 must first be set for current input.

Switching between Main/Auxiliary Frequency References

The frequency reference input can be switched between the analog terminals A1, A2, and A3 using multi-speed inputs. Refer to *Multi-Step Speed Selection on page 180* for details on using this function.

Setting 2: MEMOBUS/Modbus Communications

This setting requires that the frequency reference is entered via the RS-485/422 serial communications port (control terminals R+, R-, S+, S-). For instructions, see *MEMOBUS/Modbus Communications on page 477*.

Setting 3: Option card

This setting requires that the frequency reference is entered via an option board plugged into connector CN5-A on the drives control board. Consult the manual supplied with the option board for instructions on integrating the drive with the communication system.

Note: If the frequency reference source is set for an option PCB (b1-01 = 3), but an option board is not installed, an OPE05 Operator Programming Error will be displayed on the digital operator and the drive will not run.

Setting 4: Pulse Train Input

If b1-01 is set to 4, the frequency reference must be provided by a pulse train signal to terminal RP. Follow the directions below to make sure the pulse signal is working properly.

Verifying Pulse Train is Working Properly

- Make sure that b1-04 is set to 4 and H6-01 is set to 0.
- Set the pulse input scaling H6-02 to the pulse train frequency value that equals 100% of the frequency reference.
- Enter a pulse train signal to terminal RP and check if the correct frequency reference is displayed.

■ b1-02: Run Command Selection 1

Parameter b1-02 determines the Run command source 1 in the REMOTE mode.

No.	Parameter Name	Setting Range	Default
b1-02	Run Command Selection 1	0 to 3	1

Setting 0: Operator

When the b1-02 = 0, the LO/RE light will switch on and the RUN key will enter a Run command to start the drive.

Setting 1: Control Circuit Terminal

This setting requires that the Run and Stop commands are entered from the digital input terminals. The following sequences can be used:

- 2-wire sequence 1:
  Two inputs (FWD/Stop-REV/Stop). Initializing the drive by setting A1-03 = 2220, presets the terminals S1 and S2 to these functions. This is the default setting of the drive. Also refer to ***Setting 40, 41: Forward run, Reverse run command for 2-wire sequence on page 221***.
- 2-wire sequence 2:
  Two inputs (Start/Stop-FWD/REV). Also refer to ***Setting 42, 43: Run and direction command for 2-wire sequence 2 on page 221***.
- 3-wire sequence:
  Three inputs (Start-Stop-FWD/REV). Initialize the drive by setting A1-03 = 3330 presets the terminals S1, S2, and S5 to these functions. Also refer to ***Setting 0: 3-Wire Sequence on page 215***.

Setting 2: MEMOBUS/Modbus Communications

To issue a Run command via serial communications, set b1-02 to 2 and connect the RS-485/422 serial communication cable to control terminals R+, R-, S+, and S- on the removable terminal block. For instructions, ***Refer to MEMOBUS/ Modbus Communications on page 477***.

Setting 3: Option Card

To issue the Run command via the communication option board, set b1-02 to 3 and plug a communication option board into the CN5-A port on the control PCB. Refer to the manual supplied with the option board for instructions on integrating the drive into the communication system.

Note: If b1-02 is set to 3, but an option board is not installed in CN5-A, an oPE05 operator programming error will be displayed on the digital operator and the drive will not run.

上正科技有限公司
購買、維修 此手冊零組件
電話： 037-466333
Email: service@repairtw.com
Line id: @zzzz
www.repairtw.com

■ b1-03: Stopping Method Selection

Select how the drive stops the motor when the Run command is removed or when a Stop command is entered.

No.	Parameter Name	Setting Range	Default
b1-03	Stopping Method Selection	0 to 3, 9	0

Setting 0: Ramp to stop

When the Run command is removed, the drive will decelerate the motor to stop. The deceleration rate is determined by the active deceleration time. The default deceleration time is set to parameter C1-02.

When the output frequency falls below the level set in parameter b2-01, the drive will start DC injection, Zero Speed Control or Short Circuit Braking, depending on the selected control mode. Refer to ***b2-01: DC Injection Braking Start Frequency on page 144*** for details.

Setting 1: Coast to stop

When the Run command is removed, the drive will shut off its output and the motor will coast (uncontrolled deceleration) to stop. The stopping time is determined by the inertia and the friction in the driven system.

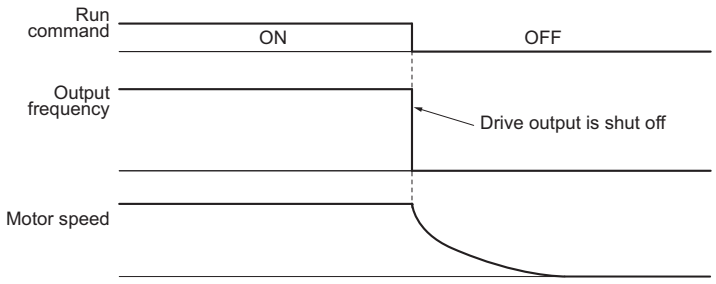

Figure 5.3 Coast to Stop

Note: After a stop is initiated, any subsequent Run command entered will be ignored until the minimum baseblock time (L2-03) has expired. Do not enter Run command until it has come to a complete stop. To start the motor back up before it has stopped completely, use DC Injection at start (refer to ***b2-03: DC Injection Braking Time at Start on page 145***) or Speed Search (refer to ***b3: Speed Search on page 146***).

Setting 2: DC Injection Braking to stop

When the Run command is removed, the drive will enter baseblock (turn off its output) for the minimum baseblock time (L2-03). Once the minimum baseblock time has expired, the drive will brake the motor by injecting DC current into the motor windings. The stopping time is significantly faster than when compared with simply coasting to stop. The level of current used for DC Injection Braking is set by parameter b2-02 (default = 50%).

Note: This function is not available in the control modes for PM motors (A1-02 = 5, 6, 7).

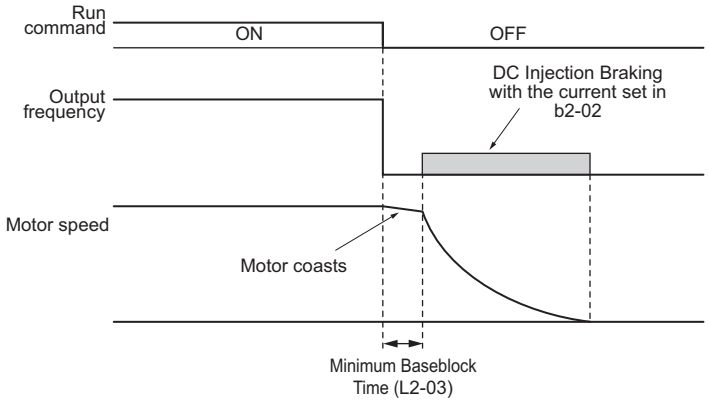

Figure 5.4 DC Injection Braking to Stop

The time for DC Injection Braking is determined by the value set to b2-04 and by the output frequency at the time the Run command is removed. It can be calculated by:

$$\text{DC Injection brake time} = \frac{(\text{b2-04}) \times 10 \times \text{Output frequency}}{\text{Max. output frequency (E1-04)}}$$

上正科技有限公司
購買、維修 此手冊零組件
電話： 037-466333
Email: service@repairtw.com
Line id: @zzzz
www.repairtw.com

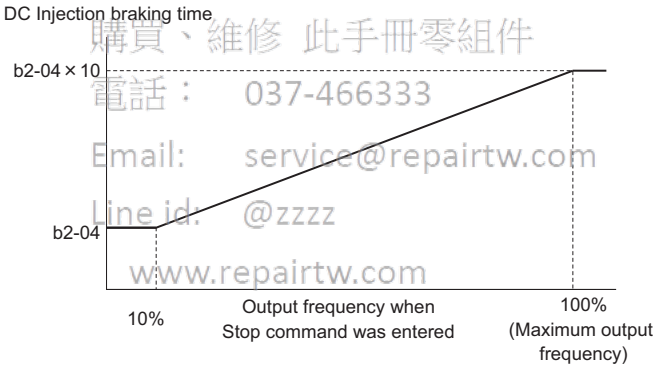

Figure 5.5 DC Injection Braking Time Depending on Output Frequency

Note: If an overcurrent (oC) fault occurs during DC Injection Braking to stop, lengthen the minimum baseblock time (L2-03) until the fault no longer occurs.

Setting 3: Coast to Stop with Timer

When the Run command is removed, the drive will turn off its output and the motor will coast to stop. If a Run command is input before the time t (value of C1-02) has expired, the drive will not start. A Run command activated during time t must be cycled after t has expired in order to start the drive.

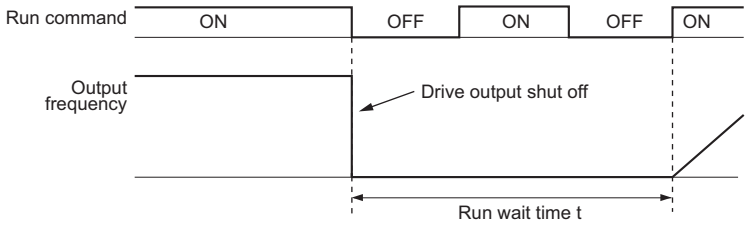

Figure 5.6 Coast to Stop with Timer

The wait time t is determined by the output frequency when the Run command is removed and by the active deceleration time.

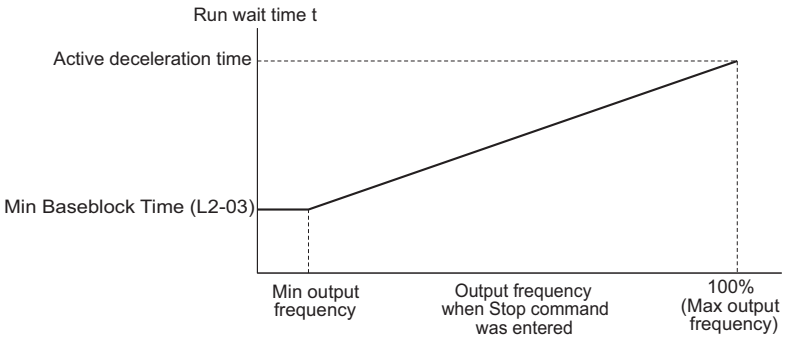

Figure 5.7 Run Wait Time Depending on Output Frequency

Setting 9: Simple Positioning Stop

This method of stopping the motor always decelerates the same distance to stop as shown in ***Figure 5.8***. The stopping distance S1 is calculated using the maximum output frequency setting E1-04 and the selected deceleration time. If the drive is stopped from a frequency lower than the maximum speed it keeps the current speed. When the distance traveled becomes equal to S1 - S2, the drive decelerates to stop using the current deceleration time. The stopping accuracy can be adjusted using the positioning gain set in parameter d4-12.

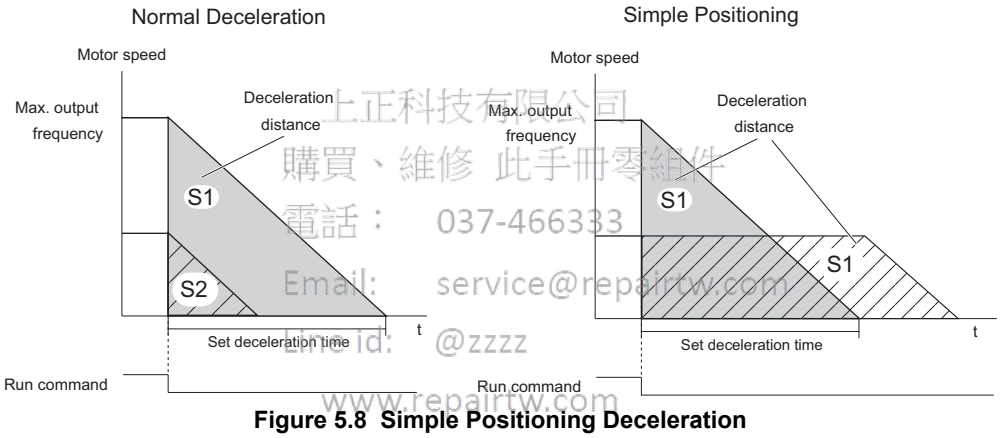

上正科技有限公司
購買、維修 此手冊零組件
電話： 037-466333
Email: service@repairtw.com
Line id: @zzzz
www.repairtw.com

Figure 5.8 Simple Positioning Deceleration

■ b1-04: Reverse Operation Selection

For some applications, reverse motor rotation is not appropriate and may cause problems (e.g., air handling units, pumps, etc.). Setting parameter b1-04 to 1 instructs the drive to ignore any Reverse run commands.

No.	Parameter Name	Setting Range	Default
b1-04	Reverse Operation Selection	0 or 1	0

Setting 0: Reverse operation enabled

Possible to operate the motor in both forward and reverse directions.

Setting 1: Reverse operation disabled

Drive disregards a Reverse run command or a negative frequency reference.

■ b1-05: Action Selection below Minimum Output Frequency (CLV and CLV/PM)

Parameter b1-05 sets the operation when the frequency reference is lower than the minimum output frequency set in parameter E1-09.

No.	Parameter Name	Setting Range	Default
b1-05	Action Selection below Minimum Output Frequency	0 to 3	0

Setting 0: Follow the Frequency Reference

The drive adjusts the motor speed following the speed reference, even if the frequency reference is below the setting of parameter E1-09. When the Run command is removed and the motor speed is smaller than the setting of b2-01, Zero Speed Control (not position lock) is performed for the time set in parameter b2-04 before the drive output shuts off.

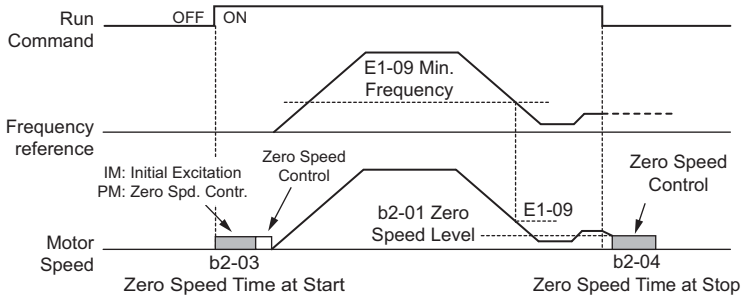

Figure 5.9 Run at the Frequency Reference

Setting 1: Coast to Stop

The motor is started first when the frequency reference exceeds the setting of parameter E1-09. Once the motor is running and the frequency reference falls below E1-09 the drive output is shut off and the motor coasts. When the motor speed falls below the zero speed level set in parameter b2-01, Zero Speed Control is activated for the time set in b2-04.

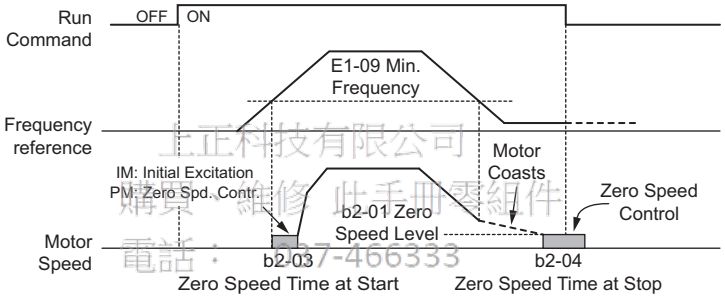

正正科技有限公司
購買、維修此手冊零組件
電話： 37-466333
Email: service@repairtw.com
Line id: @zzzz
www.repairtw.com

Figure 5.10 Coast to Stop

Setting 2: Run at the minimum frequency

Whenever a Run command is active and the frequency reference is smaller than the value of parameter E1-09, the drive runs the motor at the speed set in E1-09. When the Run command is removed, the drive decelerates the motor. As soon as the motor speed reaches the zero speed level set in b2-01, Zero Speed Control is activated for the time set in b2-04.

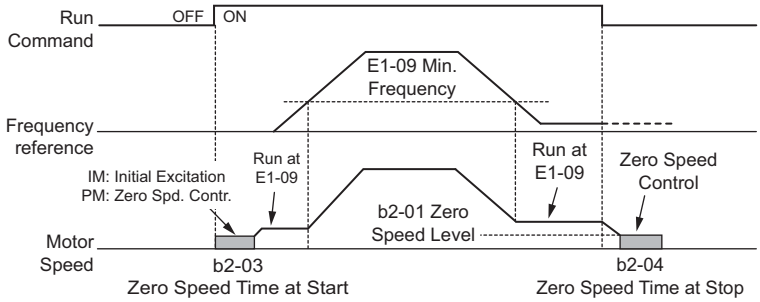

Figure 5.11 Run at the Minimum Frequency

Setting 3: Zero Speed Control

The drive applies Zero Speed Control whenever the frequency reference setting is below the value of parameter E1-09. When the Run command is removed, Zero Speed Control is activated for the time set in b2-04, even if it was already active before.

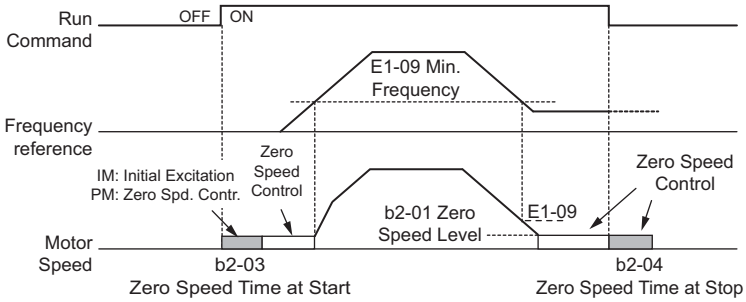

Figure 5.12 Zero Speed Control

■ b1-06: Digital Input Reading

This parameter defines how the digital inputs are read.

No.	Name	Setting Range	Default
b1-06	Digital Input Reading	0 or 1	1

Setting 0: Read once

The state of a digital input is read once. If the state has changed, the input command is immediately processed. With this setting the drive responds more quickly to digital inputs, but a noisy signal could cause erroneous operation.

Setting 1: Read twice

The state of a digital input is read twice. Only if the state does not change during the double reading, the input command is processed. This reading process is slower but more resistant against noisy signals.

上正科技有限公司
購買、維修 此手冊零組件
電話：037-166138
Email: service@repairtw.com
Line Id: @2222

■ b1-07: LOCAL/REMOTE Run Selection

The drive has three separate control sources that can be switched using digital inputs (H1-☐☐ = 1 (LOCAL/REMOTE Selection) or 2 (External reference 1/2)) or the LO/RE key on the digital operator. ***Refer to Setting 1: LOCAL/REMOTE selection on page 215***, ***Refer to Setting 2: External reference 1/2 selection on page 216*** and ***Refer to o2-01: LO/RE (LOCAL/REMOTE) Key Function Selection on page 285*** for details.

- LOCAL: Digital operator. The digital operator is used to set the frequency reference and Run command.
- REMOTE: External reference 1. The frequency reference and Run command source are set by b1-01 and b1-02.
- REMOTE: External reference 2. The frequency reference and Run command source are set by b1-15 and b1-16.

When switching from LOCAL to REMOTE, or between External reference 1 and External reference 2, the Run command may already be present at the location the source was switched to. Parameter b1-07 can be used to determine how the Run command is treated in this case.

No.	Parameter Name	Setting Range	Default
b1-07	LOCAL/REMOTE Run Selection	0 or 1	0

Setting 0: Run command must be cycled

When the Run command source is different in the old and new source (e.g., the old source was the terminals and the new source is serial communication), and the Run command is active at the new source as the switch over occurs, the drive will not start or will stop operation if it was running before. The Run command has to be cycled at the new source in order to start the drive again.

Setting 1: Accept Run command at the new source

When the Run command is active at the new source, the drive starts or continues operation if it was running before.

WARNING! *The drive may start unexpectedly if switching control sources when b1-07 = 1. Clear all personnel away from rotating machinery and electrical connections prior to switching control sources. Failure to comply may cause death or serious injury.*

■ b1-08: Run command selection while in Programming Mode

As a safety precaution, the drive will not normally respond to a Run command input when the digital operator is being used to adjust parameters in the Programming Mode (Verify Menu, Setup Mode, Parameter Settings Mode, and Auto-Tuning Mode). If required by the application, set b1-08 to allow the drive to run while in the Programming Mode.

No.	Parameter Name	Setting Range	Default
b1-08	Run Command Selection while in Programming Mode	0 to 2	0

Setting 0: Disabled

A Run command is not accepted while the digital operator is in the Programming Mode.

Setting 1: Enabled

A Run command is accepted in any digital operator mode.

Setting 2: Prohibit programming during run

It is not possible to enter the Programming Mode as long as the drive output is active. The Programming Mode cannot be displayed during Run.

■ b1-14: Phase Order Selection

Sets the phase order for drive output terminals U/T1, V/T2, and W/T3.

Switching motor phases will reverse the direction of the motor.

No.	Parameter Name	Setting Range	Default
b1-14	Phase Order Selection	0 or 1	0

Setting 0: Standard phase order
Setting 1: Switched phase order

上正科技有限公司
購買、維修 此手冊零組件
電話： 037-466333
Email: service@repairtw.com
www.repairtw.com

■ b1-15: Frequency Reference Selection 2

Refer to b1-01: Frequency Reference Selection 1 on page 136.

No.	Parameter Name	Setting Range	Default
b1-15	Frequency Reference Selection 2	0 to 4	0

■ b1-16: Run Command Selection 2

Refer to b1-02: Run Command Selection 1 on page 137.

No.	Parameter Name	Setting Range	Default
b1-16	Run Command Selection 2	0 to 3	0

■ b1-17: Run Command at Power Up

This parameter is used to determine whether an external Run command that is active during power up will start the drive or not.

No.	Parameter Name	Setting Range	Default
b1-17	Run Command at Power Up	0 or 1	0

Setting 0: Run command at power up is not issued

The Run command has to be cycled to start the drive.

Note: For safety reasons, the drive is initially programmed not to accept a Run command at power up (b1-17 = 0). If a Run command is issued at power up, the RUN indicator LED will flash quickly.

Setting 1: Run command and power up is issued

If an external Run command is active when the drive is powered up, then the drive will start to operate the motor as soon as it gets ready for operation (i.e., once the internal start up process is complete).

WARNING! *Sudden Movement Hazard. If b1-17 is set to 1 and an external Run command is active during power up, the motor will begin rotating as soon as the power is switched on. Proper precautions must be taken to ensure that the area around the motor is safe prior to powering up the drive. Failure to comply may cause serious injury.*

◆ b2: DC Injection Braking and Short Circuit Braking

These parameters determine how the DC Injection Braking, Zero Speed Control, and Short Circuit Braking features operate.

■ b2-01: DC Injection Braking Start Frequency

Parameter b2-01 is active when "Ramp to stop" is selected as the stopping method (b1-03 = 0).

No.	Name	Setting Range	Default
b2-01	DC Injection Braking Start Frequency	0.0 to 10.0 Hz	Determined by A1-02

The function triggered by parameter b2-01 depends on the control mode that has been selected.

V/f, V/f w/PG and OLV (A1-02 = 0, 1, 2)

For these control modes, parameter b2-01 sets the starting frequency for DC Injection Braking at stop. Once the output frequency falls below the setting of b2-01, DC Injection Braking is enabled for the time set in parameter b2-04.

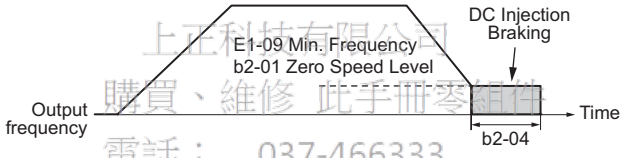

上正科技有限公司
購買、維修 此手冊零組件
電話： 037-466333
Email: service@repairtw.com
Line id: @zzzz
www.repairtw.com

Figure 5.13 DC Injection Braking at Stop for V/f, V/f w/PG and OLV

Note: If b2-01 is set to a smaller value than parameter E1-09 (minimum frequency), then DC Injection Braking will begin as soon as the frequency falls to the value set to E1-09.

OLV/PM and AOLV/PM (A1-02 = 5, 6)

For these control modes, parameter b2-01 sets the starting frequency for Short-Circuit Braking at stop. Once the output frequency falls below the setting of b2-01, Short-Circuit Braking is enabled for the time set in parameter b2-13. If DC Injection Braking time is enabled at stop, then DC Injection Braking is performed for the time set in b2-04 after Short-Circuit Braking is complete.

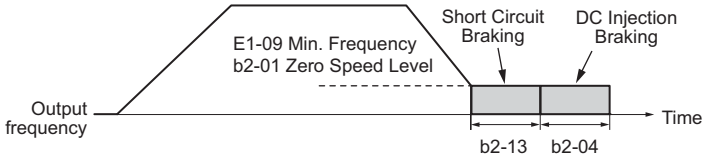

Figure 5.14 Short-Circuit Braking at Stop in OLV/PM and AOLV/PM

Note: If b2-01 is set to a smaller value than parameter E1-09 (minimum frequency), then DC Injection Braking will begin as soon as the frequency falls to the value set to E1-09.

CLV and CLV/PM (A1-02 = 3, 7)

For these control modes, parameter b2-01 sets the starting frequency for Zero Speed Control (not position lock) at stop. Once the output frequency falls below the setting of b2-01, Zero Speed Control is enabled for the time set in parameter b2-04 if b1-05 = 0.

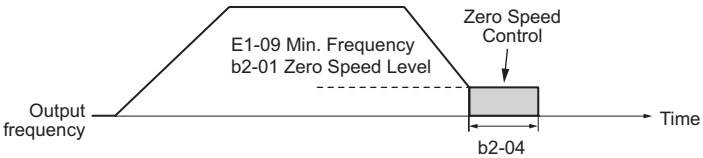

Figure 5.15 Zero Speed Control at Stop in CLV and CLV/PM

Note: If b2-01 is set to lower than the minimum frequency (E1-09), then Zero Speed Control begins at the frequency set to E1-09.

■ b2-02: DC Injection Braking Current

Sets the DC Injection Braking current as a percentage of the drive rated current. If set larger than 50%, the carrier frequency is automatically reduced to 1 kHz.

No.	Name	Setting Range	Default
b2-02	DC Injection Braking Current	0 to 100%	50%

The level of DC Injection Braking current affects the strength of the magnetic field attempting to lock the motor shaft. Increasing the current level will increase the amount of heat generated by the motor windings. This parameter should only be increased to the level necessary to hold the motor shaft.

■ b2-03: DC Injection Braking Time at Start

Sets the time of DC Injection Braking (Zero Speed Control when in CLV and CLV/PM) at start. Used to stop a coasting motor before restarting it or to apply braking torque at start. Disabled when set to 0.00 s.

No.	Name	Setting Range	Default
b2-03	DC Injection Braking Time at Start	0.00 to 10.00 s	0.00 s

Note: Before starting an uncontrolled rotating motor (e.g., a fan motor driven by windmill effect), DC Injection or Speed Search should be used to either stop the motor or detect its speed before starting it. Otherwise motor stalling and other faults can occur.

■ b2-04: DC Injection Braking Time at Stop

Sets the time of DC Injection Braking (Zero Speed Control when in CLV and CLV/PM) at stop. Used to completely stop a motor with high inertia load after ramp down. Increase the value if the motor still coasts by inertia after it should have stopped. Disabled when set to 0.00 s.

上正科技有限公司
購買 維修 此手冊零組件
電話： 037-466333
Email: service@repairtw.com
Line Id: @2222
www.repairtw.com

No.	Name	Setting Range	Default
b2-04	DC Injection Braking Time at Stop	0.00 to 10.00 s	Determined by A1-02

■ b2-08: Magnetic Flux Compensation Value

Sets the magnetic flux compensation at start as a percentage of the no-load current value (E2-03). This function allows better more flux to develop, making it easier to start machines that require high starting torque or motors with a large rotor time constant.

No.	Name	Setting Range	Default
b2-08	Magnetic Flux Compensation Value	0 to 1000%	0%

When a Run command is issued, the DC current level injected into the motor changes linearly from the level set to b2-08 to E2-03 within the time set to b2-03.

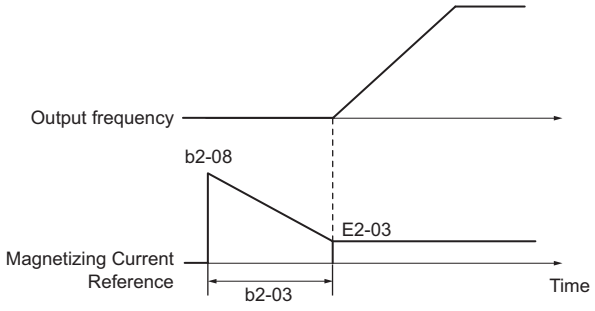

Figure 5.16 Magnetic Flux Compensation

Note that the level of the DC current injected to the motor is limited to 80% of the drive rated current or to the motor rated current, whichever value is smaller.

Note: **1.** If b2-08 is set below 100%, it can take a relatively long time for flux to develop.
2. If b2-08 is set to 0%, the DC current level will be the DC Injection current set to b2-02.
3. As DC Injection can generate a fair amount of noise, b2-08 may need to be adjusted to keep noise levels acceptable.

■ b2-12: Short Circuit Brake Time at Start

Short Circuit Braking can be used in OLV/PM and AOLV/PM. By shorting all three motor phases, it produces a braking torque in the motor and can be used to stop a coasting motor before starting it again.

Parameter b2-12 sets the time for Short-Circuit Brake operation at start. Disabled when set to 0.00 s.

No.	Name	Setting Range	Default
b2-12	Short Circuit Brake Time at Start	0.00 to 25.50 s	0.00 s

Note: Short Circuit Braking cannot prevent a PM motor from being rotated by an external force. To prevent the load from rotating the motor, use DC Injection.

■ b2-13: Short Circuit Brake Time at Stop

The Short Circuit Braking described for parameter b2-12 can also be applied at the end of deceleration in order to completely stop high inertia loads. Short Circuit Braking is initiated for the time set in b2-13 when the output frequency falls below the higher of the values b1-02 and E1-09. Parameter b2-13 sets the time for Short Circuit Braking at stop. Disabled when set to 0.00 s.

No.	Name	Setting Range	Default
b2-13	Short Circuit Brake Time at Stop	0.00 to 25.50 s	0.50 s

■ b2-18: Short Circuit Braking Current

Parameter b2-18 sets the current level for Short Circuit Braking operation as a percentage of the motor rated current. Even though a higher current level can be set using b2-18, the Short Circuit Braking current will not be higher than the drive rated current (120% for Normal Duty, 150% for Heavy Duty).

上正科技有限公司
購買、維修 此手冊零組件
電話： 037-466333
Email: service@repairtw.com
Line id: @zzz
www.repairtw.com

No.	Name	Setting Range	Default
b2-18	Short Circuit Braking Current	0.0 to 200.0%	100.0%

◆ b3: Speed Search

The Speed Search function allows the drive to detect the speed of a rotating motor shaft that is driven by external forces (e.g., a fan rotating by windmill effect or motor driven by load inertia). The motor operation can be directly started from the speed detected without needing to stop the machine before.

Example: When a momentary loss of power occurs, the drive output shuts off. This results in a coasting motor. When power returns, the drive can find the speed of the coasting motor and restart it directly.

For PM motors, only parameter b3-01 is needed to enable Speed Search.

For induction motors, the drive offers two types of Speed Search than can be selected by parameter b3-24 (Speed Estimation and Current Detection). Both methods are explained below, then followed by a description of all relevant parameters.

■ Current Detection Speed Search (b3-24 = 0)

Current Detection Speed Search is for use with IM motors. Current Detection Speed Search detects the motor speed by looking at motor current. When Speed Search is started it reduces the output frequency starting either from the maximum output frequency or the frequency reference while increasing the output voltage using the time set in parameter L2-04. As long as the current is higher than the level set in b3-02, the output frequency is lowered using the time constant b3-03. If the current falls below b3-02, the drive assumes that the output frequency and motor speed are the same and accelerates or decelerates to the frequency reference.

Be aware that sudden acceleration may occur when using this method of Speed Search with relatively light loads.

The following time chart illustrates how Current Detection Speed Search operates after a momentary power loss (L2-01 must be set to 1 or 2):

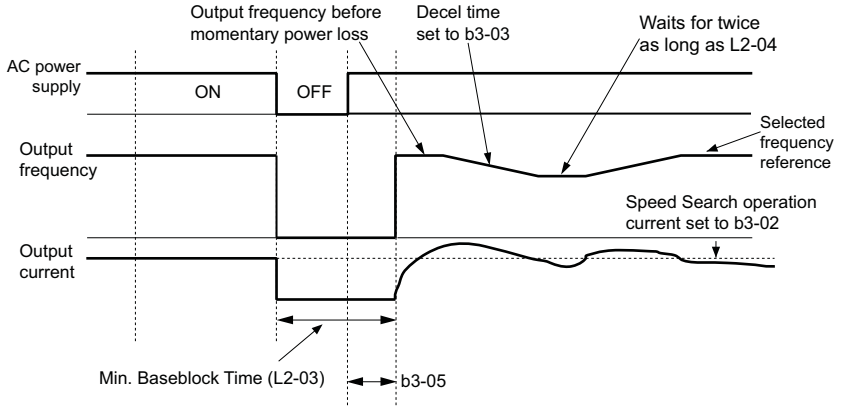

Figure 5.17 Current Detection Speed Search after Power Loss

Note: After power is restored, the drive waits until the time set to b3-05 has passed before performing Speed Search. Thereby the Speed Search may start not at the end of L2-03 but even later.

When Speed Search is applied automatically with the Run command, the drive waits for the minimum baseblock time L2-03 before Speed Search is started. If L2-03 is smaller than the time set in parameter b3-05, then b3-05 is used as the wait time.

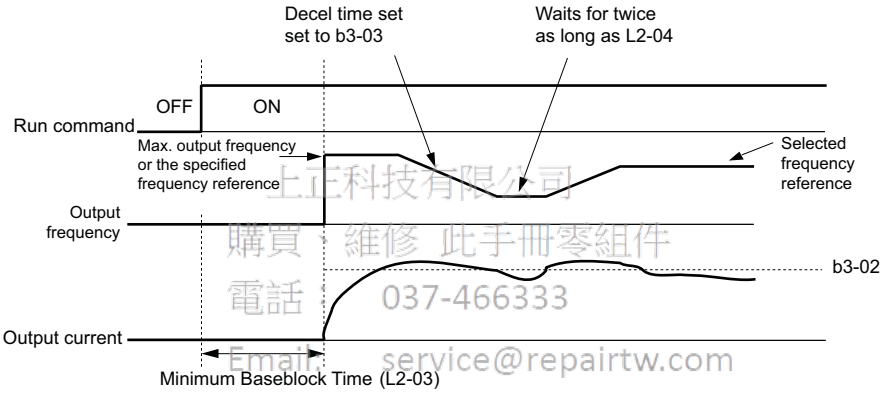

上正科技有限公司
購買、維修 此手冊零組件
電話：037-466333
Email：service@repairtw.com
Line Id：@2222
www.repairtw.com

Figure 5.18 Current Detection Speed Search at Start or Speed Search Command by Digital Input

Notes on Using Current Detection Type Speed Search

- Shorten the Speed Search deceleration time set to b3-03 if an oL1 fault occurs while performing Current Detection Speed Search.
- Current Detection Speed Search is not available when using Open Loop Vector Control for PM motors.
- Increase the minimum baseblock time set to L2-03 if an overcurrent or overvoltage fault occurs when performing Speed Search after power is restored following a momentary power loss.

■ Speed Estimation Type Speed Search (b3-24 = 1)

This method can be used for a single induction motor connected to a drive. It should not be used if the motor is one or more frame sizes smaller than the drive, at motor speeds above 200 Hz, or when using a single drive to operate more than one motor.

Speed Estimation is executed in two steps as described below.

Step 1: Back EMF Voltage Estimation

This method is used by Speed Search after short baseblock (e.g., a power loss where the drive's CPU kept running and the Run command was kept active). Here, the drive estimates the motor speed by analyzing the back EMF voltage. It outputs the estimated frequency and increases the voltage using the time constant set in parameter L2-04. After that, the motor is accelerated or decelerated to the frequency reference starting from the detected speed. If there is not enough residual voltage in the motor windings to perform the calculations described above, then the drive will automatically proceed to step 2.

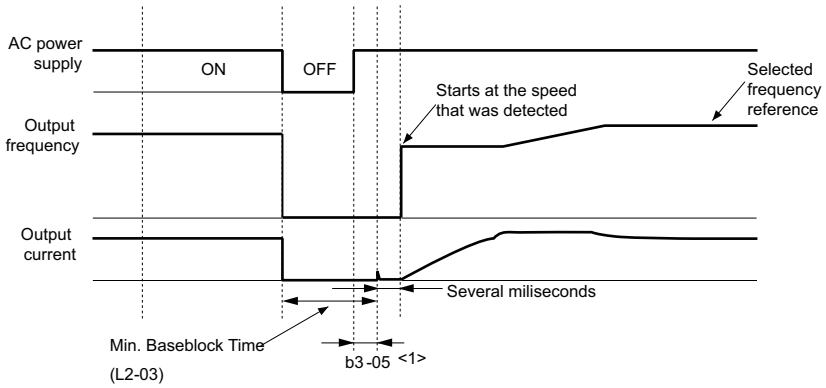

Figure 5.19 Speed Search after Baseblock

<1> Once AC power is restored, the drive will wait for at least the time set to b3-05. If the power interruption is longer than the minimum baseblock time set to L2-03, the drive will wait until the time set to b3-05 has passed after power is restored before starting Speed Search.

Step 2: Current Injection

Current Injection is performed when there is not enough residual voltage remaining in the motor. This might occur after after longer power losses, when Speed Search is applied with the Run command (b3-01 = 1), or if an External search command is used. It injects the DC current set in b3-06 to the motor and detects the speed by measuring the current feedback. The drive outputs the detected frequency and increases the voltage using the time constant set in parameter L2-04 while looking at the motor current. If the current is higher than the level in b3-02, then the output frequency is reduced. When the current falls below b3-02, the motor speed is assumed to be found and the drive starts to accelerate or decelerate to the frequency reference.

上正科技有限公司
購買維修手冊零組件
電話： 037-466333
Email: service@repairtw.com
Line Id: @zzzz
www.repairtw.com

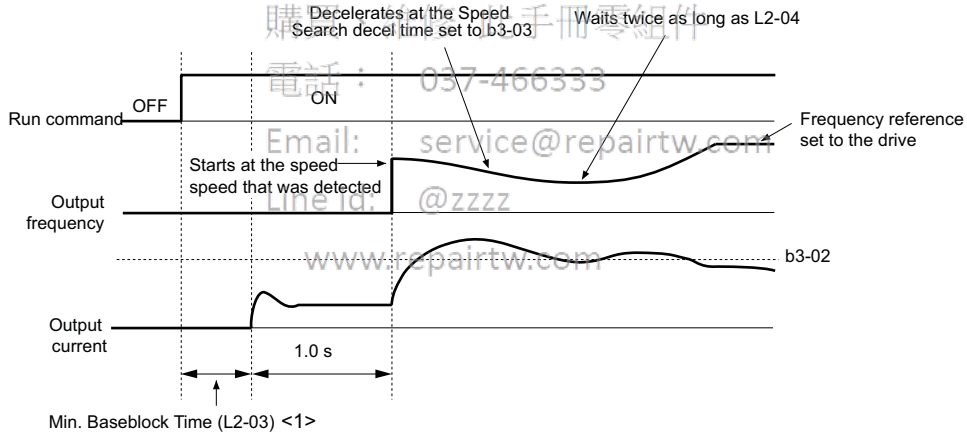

Figure 5.20 Speed Search at Start

<1> The wait time for Speed Search (b3-05) determines the lower limit.

Notes on Using Speed Estimation Speed Search

- Rotational Auto-Tuning for V/f Control (T1-01 = 3) needs to be first performed if you plan to use Speed Estimation in V/f Control. Perform Stationary Auto-Tuning for Line-to-Line Resistance (T1-01 = 2) again if the there is a change in the cable length between the drive and motor.
- Use Current Detection to search for speeds beyond 200 Hz, if the application is running multiple motors from the same drive, or if the motor is considerably smaller than the capacity of the drive.
- Speed Estimation may have trouble finding the actual speed if the motor cable is very long. Current Detection should be used in such situations.
- Use Current Detection instead of Speed Estimation when operating motors smaller than 1.5 kW. Speed Estimation can end up stopping smaller motors, as it might not be able to detect the speed or rotation direction of such small motors.
- Short Circuit Braking is recommended instead of Speed Search when using OLV/PM and AOLV/PM along with a fairly long motor cable.
- Use Short Circuit Braking instead of Speed Search if attempting to find the speed of a motor coasting faster than 200 Hz in OLV/PM and AOLV/PM.

■ Activating of Speed Search

Speed Search can be activated as described below. Note that the Speed Search type must be selected in parameter b3-24 independent of the activation method.

1. Automatically activate Speed Search with every Run command. Here, external Speed Search commands are ignored.
2. Activate Speed Search using the digital input terminals.
   The following input functions for H1-☐☐ can be used.

Table 5.7 Speed Search Activation by Digital Inputs

Setting	Description	b3-24 = 0	b3-24 = 1
61	External Search Command 1	Closed: Activate Current Detection Speed Search from the maximum output frequency (E1-04).	Activate Speed Estimation Speed Search
62	External Search Command 2	Closed: Activate Current Detection Speed Search from the frequency reference.	

   To activate Speed Search by a digital input, the input must always be set together with the Run command, or the Run command must be entered after the Speed Search command is given.
3. After automatic fault restart
   When the number of maximum fault restarts in parameter L5-01 is set higher than 0, the drive will automatically perform Speed Search as specified by b3-24 following a fault.
4. After momentary power loss
   This mode requires that the Power Loss Ride-Thru function be enabled always or at least enabled during CPU operation (L2-01 = 1 or 2). *Refer to L2-01: Momentary Power Loss Operation Selection on page 249*
5. After external baseblock is released
   The drive will resume the operation starting with Speed Search if the Run command is present and the output frequency is above the minimum frequency when the Baseblock command (H1-☐☐ = 8 or 9) is released. For this operation mode, set the operation during an external Baseblock command to hold the output frequency (H1-13 = 0).

上正科技有限公司
購買 維修 此手冊零組件
電話： 037-466333
Email: service@repairtw.com
Line id: @zzzz
www.repairtw.com

■ b3-01: Speed Search Selection at Start

Determines if Speed Search is automatically performed when a Run command is issued or not.

No.	Parameter Name	Setting Range	Default
b3-01	Speed Search Selection at Start	0 or 1	Determined by A1-02

Setting 0: Disabled

When the Run command is entered, the drive starts operating at the minimum output frequency. If external Speed Search 1 or 2 is already enabled by a digital input, the drive will start operating with Speed Search.

Setting 1: Enabled

Speed Search is performed whenever the Run command is entered. The drive begins running the motor once Speed Search is complete.

■ b3-02: Speed Search Deactivation Current

Sets the operating current for Speed Search as a percentage of the drive rated current. Normally there is no need to change this setting. If the drive has trouble restarting, try lowering this value.

No.	Name	Setting Range	Default
b3-02	Speed Search Deactivation Current	0 to 200%	Determined by A1-02

Note: When parameter A1-02 = 0 (V/f Control) the factory default setting is 120. When parameter A1-02 = 2 (Open Loop Vector) the factory default setting is 100.

■ b3-03: Speed Search Deceleration Time

Parameter b3-03 sets the output frequency reduction ramp used by Current Detection Speed Search (b3-24 = 0) and by the Current Injection Method of Speed Estimation (b3-24 = 1). The time entered into b3-03 will be the time to decelerate from maximum frequency (E1-04) to minimum frequency (E1-09).

No.	Name	Setting Range	Default
b3-03	Speed Search Deceleration Time	0.1 to 10.0 s	2.0 s

■ b3-04: V/f Gain During Speed Search

During Speed Search, the output voltage calculated from the V/f pattern is multiplied with the value set in parameter b3-04. Changing this setting can be useful in order to reduce the output current during Speed Search.

No.	Name	Setting Range	Default
b3-04	V/f Gain During Speed Search	10 to 100%	Determined by o2-04

■ b3-05: Speed Search Delay Time

In cases where an output contactor is used between the drive and the motor, the contactor must be closed before Speed Search can be performed. This parameter can be used to delay the Speed Search operation, giving the contactor enough time to close completely.

No.	Name	Setting Range	Default
b3-05	Speed Search Delay Time	0.0 to 100.0 s	0.2 s

■ b3-06: Output Current 1 During Speed Search

Sets the current injected to the motor at the beginning of Speed Estimation Speed Search as a factor of the motor rated current set in E2-01 (E4-01 for motor 2). If the motor speed is relatively slow when the drive starts to perform Speed Search after a long period of baseblock, it may be helpful to increase the setting value. The output current during Speed Search is automatically limited by the drive rated current.

No.	Name	Setting Range	Default
b3-06	Output Current 1 during Speed Search	0.0 to 2.0	Determined by o2-04

Note: If Speed Estimation is not working correctly even after adjusting b3-06, try using Current Detection Speed Search instead.

上亞科技有限公司
購買、維修 此手冊零組件
電話： 037-466333
Email: service@repairtw.com
www.epan.tw.com

■ b3-10: Speed Search Detection Compensation Gain

This parameter sets the gain for the detected motor speed of the Speed Estimation Speed Search. The setting should be increased only if an overvoltage fault occurs when the drive restarts the motor.

No.	Name	Setting Range	Default
b3-10	Speed Search Detection Compensation Gain	1.00 to 1.20	1.05

■ b3-14: Bi-Directional Speed Search Selection

Sets how the drive determines the motor rotation direction when performing Speed Estimation Speed Search.

No.	Parameter Name	Setting Range	Default
b3-14	Bi-Directional Speed Search Selection	0 or 1	Determined by A1-02

Setting 0: Disabled

The drive uses the frequency reference to determine the direction of motor rotation in order to restart the motor.

Setting 1: Enabled

The drive detects the motor rotation direction in order to restart the motor.

■ b3-17: Speed Search Restart Current Level

A large current can flow into the drive if there is a fairly large difference between the estimated frequency and the actual motor speed when performing Speed Estimation. This parameter sets the current level at which Speed Estimation is restarted, thus avoiding overcurrent and overvoltage problems. Set as a percentage of the drive rated current.

No.	Name	Setting Range	Default
b3-17	Speed Search Restart Current Level	0 to 200%	150%

■ b3-18: Speed Search Restart Detection Time

Sets the time that the current must be greater than the level set in b3-17 before Speed Search can be restarted.

No.	Name	Setting Range	Default
b3-18	Speed Search Restart Detection Time	0.00 to 1.00 s	0.10 s

■ b3-19: Number of Speed Search Restarts

Sets the number of times the drive should attempt to find the speed and restart the motor. If the number of restart attempts exceeds the value set to b3-19, the SEr fault will occur and the drive will stop.

No.	Name	Setting Range	Default
b3-19	Number of Speed Search Restarts	0 to 10	3

■ b3-24: Speed Search Method Selection

Sets the Speed Search method used.

No.	Parameter Name	Setting Range	Default
b3-24	Speed Search Method Selection	0 or 1	0

Setting 0: Current Detection Speed Search
Setting 1: Speed Estimation Speed Search

Note: For explanations of the Speed Search methods, *Refer to Current Detection Speed Search (b3-24 = 0) on page 146* and *Refer to Speed Estimation Type Speed Search (b3-24 = 1) on page 147*.

■ b3-25: Speed Search Wait Time

Sets the wait time between Speed Search restarts. Increase the wait time if problems occur with overcurrent, overvoltage, or if the SEr fault occurs.

上正科技有限公司
購買、維修 此手冊零組件
電話： 037-466333
E-mail: service@repairtw.com
Line id: @zzzz
www.repairtw.com

No.	Name	Setting Range	Default
b3-25	Speed Search Wait Time	0.0 to 30.0 s	0.5 s

◆ b4: Delay Timers

The timer function is independent of drive operation and can be used to delay the switching of a digital output triggered by a digital input signal. An on-delay and off-delay can be separately set. The delay timer can help to get rid of chattering switch noise from sensors.

To enable the timer function, a multi-function input must be set to “Timer input” (H1-☐☐=18) and a multi-function output must be set to “Timer output” (H2-☐☐=12). One timer can be used only.

■ b4-01, b4-02: Timer Function On-Delay, Off-Delay Time

b4-01 sets the on-delay time for switching the timer output. b4-02 sets the off-delay time for switching the timer output.

No.	Name	Setting Range	Default
b4-01	Timer Function On-Delay Time	0.0 to 3000.0 s	0.0 s
b4-02	Timer Function Off-Delay Time	0.0 to 3000.0 s	0.0 s

■ Timer Function Operation

When the timer function input closes for longer than the value set in b4-01, the timer output switches on. When the timer function input is open for longer than the value set in b4-02, the timer output function switches off. The following diagram demonstrates the timer function operation.

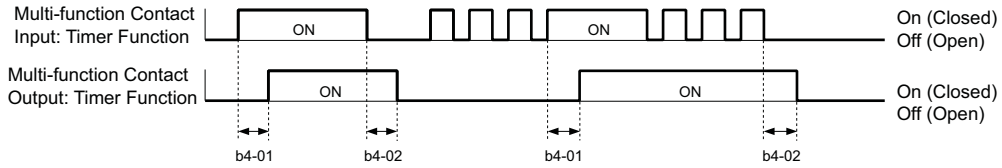

Figure 5.21 Timer Operation

◆ b5: PID Control

The drive has a built in PID (Proportional + Integral + Derivative) controller that can be used for closed loop control of system variables such as pressure, temperature, and so on. The difference between the target and the feedback value (deviation) is fed into the PID controller. The PID controller adjusts the drive output frequency in order to minimize the deviation, providing accurate control of system variables.

■ P Control

The output of P control is the product of the deviation and the P gain so that it follows the deviation directly and linearly. With P control, only an offset between the target and feedback remains.

■ I Control

The output of I control is the integral of the deviation. It minimizes the offset between target and feedback value that typically remains when pure P control is used. The integral time (I time) constant determines how fast the offset is eliminated.

■ D Control

D control predicts the deviation signal by multiplying its derivative (slope of the deviation) with a time constant, then adds this value to the PID input. This way the D portion of a PID controller provides a braking action to the controller response and can reduce the tendency to oscillate and overshoot.

Be aware that D control tends to amplify noise on the deviation signal, which can result in control instability. D control should therefore only be used when necessary.

上正科技有限公司
購買、維修 此手冊零組件
電話： 037-466333
Email: service@repairtw.com
Line id: @zzzz
www.repairtw.com

■ PID Operation

To better demonstrate how PID works, the diagram below shows how the PID output changes when the PID input (deviation) jumps from 0 to a constant level.

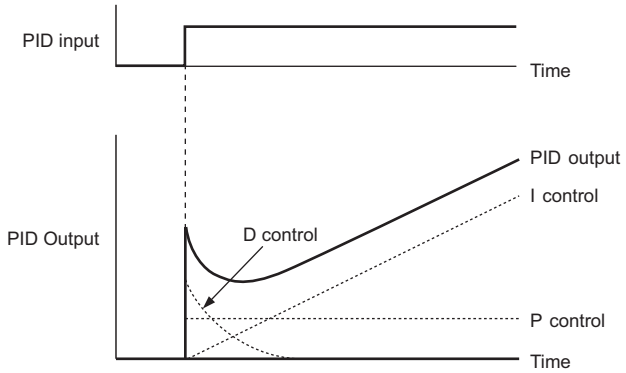

Figure 5.22 PID Operation

■ Using PID Control

Applications for PID control are listed in the table below.

Application	Description	Sensors Used
Speed Control	Machinery speed is fed back and adjusted to meet the target value. Synchronous control is performed using speed data from other machinery as the target value	Tachometer
Pressure	Maintains constant pressure using pressure feedback.	Pressure sensor
Fluid Control	Keeps flow at a constant level by feeding back flow data.	Flow rate sensor
Temperature Control	Maintains a constant temperature by controlling a fan with a thermostat.	Thermocoupler, Thermistor

■ PID Setpoint Input Methods

The PID setpoint input depends on the PID function setting in parameter b5-01.

If parameter b5-01 is set to 1 or 2, the frequency reference in b1-01 (or b1-15) or one of the inputs listed in *Table 5.8* becomes the PID setpoint.

If b5-01 is set to 3 or 4, then the PID setpoint can be input from one of the sources listed in *Table 5.8*.

Table 5.8 PID Setpoint Sources

PID Setpoint Source	Settings
Analog Input A1	Set H3-02 = C
Analog Input A2	Set H3-10 = C
Analog Input A3	Set H3-06 = C
MEMOBUS/Modbus Register 0006H	Set bit 1 in register 000FH to 1 and input the setpoint to register 0006H
Pulse Input RP	Set H6-01 = 2
Parameter b5-19	Set parameter b5-18 = 1 and input the PID setpoint to b5-19

Note: A duplicate allocation of the PID setpoint input will result in an oPE alarm.

■ PID Feedback Input Methods

Either one feedback signal can be input for normal PID control, or two feedback signals can be input for controlling a differential process value.

Normal PID Feedback

The PID feedback signal can be input from one of the sources listed below.

Table 5.9 PID Feedback Sources

PID Feedback Source	Settings
Analog Input A1	Set H3-02 = B
Analog Input A2	Set H3-10 = B
Analog Input A3	Set H3-06 = B
Pulse Input RP	Set H6-01 = 1

上正科技有限公司
機器、維修 此手冊零組件
037-466333
Email: service@repairtw.com
Line id: @zzzz
www.repairtw.com

Note: A duplicate allocation of the PID feedback input will result in an oPE alarm.

Differential Feedback

The second PID feedback signal for differential feedback can come from the sources listed below. The differential feedback function is automatically enabled when a differential feedback input is assigned.

Table 5.10 PID Differential Feedback Sources

PID Differential Feedback Source	Settings
Analog Input A1	Set H3-02 = 16
Analog Input A2	Set H3-10 = 16
Analog Input A3	Set H3-06 = 16

Note: A duplicate allocation of the PID differential feedback input will result in an oPE alarm.

■ PID Block Diagram

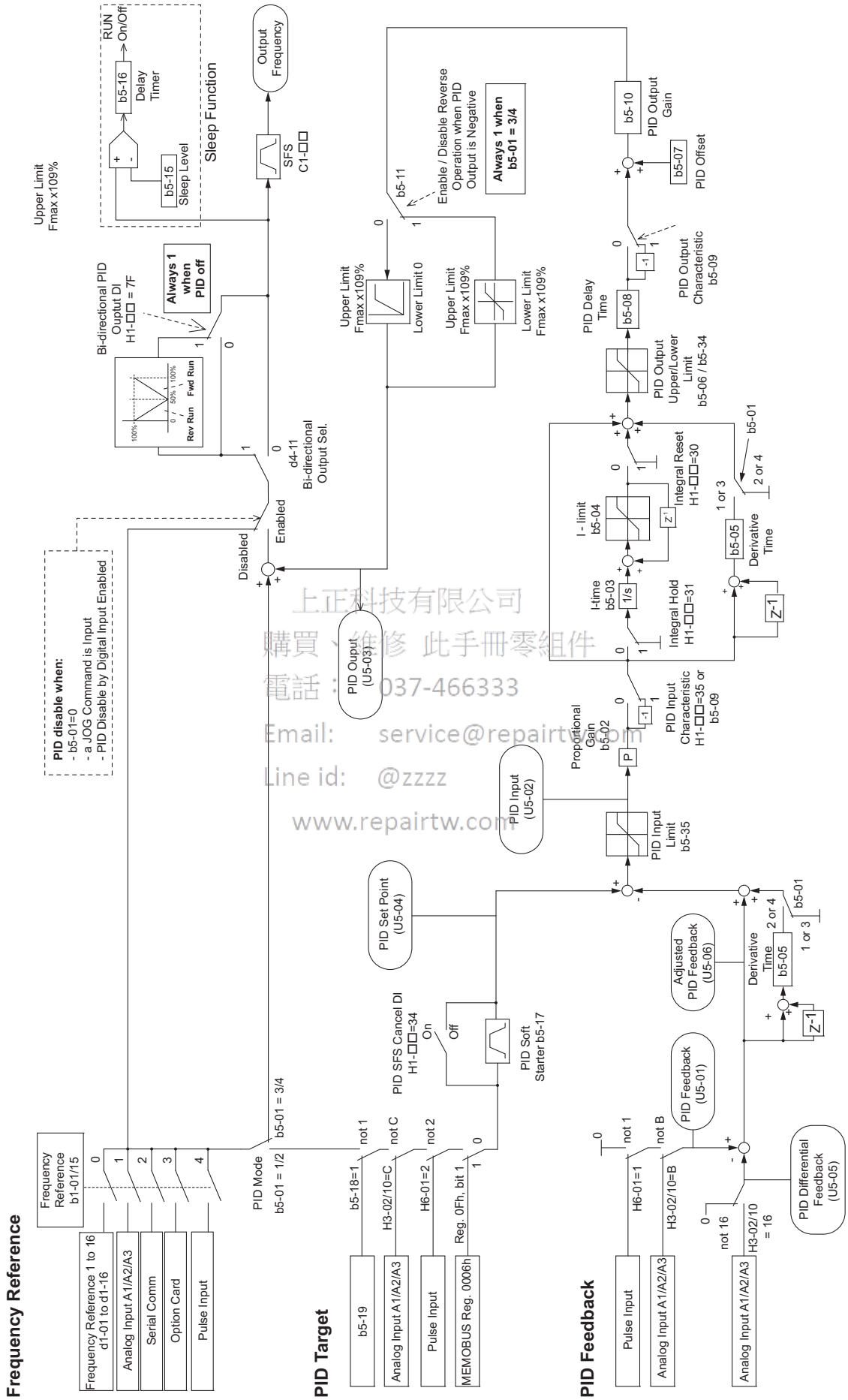

上正科技有限公司
購買、維修 此手冊零組件
電話：037-466333
Email: service@repairtw.com
Line id: @zzzz
www.repairtw.com

Figure 5.23 PID Block Diagram

■ b5-01: PID Function Setting

Enables or disables the PID operation and selects the PID operation mode.

No.	Parameter Name	Setting Range	Default
b5-01	PID Function Setting	0 to 4	0

Setting 0: PID disabled

Setting 1: Output frequency = PID output 1

The PID controller is enabled and the PID output builds the frequency reference. The PID input is D controlled.

Setting 2: Output frequency = PID output 2

The PID controller is enabled and the PID output builds the frequency reference. The PID feedback is D controlled.

Setting 3: Output frequency = frequency reference + PID output 1

The PID controller is enabled and the PID output is added to the frequency reference. The PID input is D controlled.

Setting 4: Output frequency = frequency reference + PID output 2

The PID controller is enabled and the PID output is added to the frequency reference. The PID feedback is D controlled.

■ b5-02: Proportional Gain Setting (P)

Sets the P gain that is applied to the PID input. A large value will tend to reduce the error, but may cause instability (oscillations) if set too high. A low value may allow too much offset between the setpoint and feedback.

No.	Name	Setting Range	Default
b5-02	Proportional Gain Setting (P)	0.00 to 25.00	1.00

工控料技有限公司
購買、維修 此手冊零組件
電話：037-466333
Email: service@repairtw.com
Line id: @zzzz
www.repairtw.com

■ b5-03: Integral Time Setting (I)

Sets the time constant that is used to calculate the integral of the PID input. The smaller the integral time set to b5-03, the faster the offset will be eliminated. If set too short, it can cause overshoot or oscillation. To turn off the integral time, set b5-03 = 0.00.

No.	Name	Setting Range	Default
b5-03	Integral Time Setting (I)	0.0 to 360.0 s	1.0 s

■ b5-04: Integral Limit Setting

Sets the maximum output possible from the integral block. Set as a percentage of the maximum frequency (E1-04).

No.	Name	Setting Range	Default
b5-04	Integral Limit Setting	0.0 to 100.0%	100.0%

Note: On some applications, especially those with rapidly varying loads, the output of the PID function may show a fair amount of oscillation. To suppress this oscillation, a limit can be applied to the integral output by programming b5-04.

■ b5-05: Derivative Time (D)

Sets the time the drive predicts the PID input/PID feedback signal based on the derivative of the PID input/PID feedback. Longer time settings will improve the response but can cause vibrations. Shorter settings will reduce the overshoot but also reduce the controller responsiveness. D control is disabled by setting b5-05 to zero seconds.

No.	Name	Setting Range	Default
b5-05	Derivative Time (D)	0.00 to 10.00 s	0.00 s

■ b5-06: PID Output Limit

Sets the maximum output possible from the entire PID controller. Set as a percentage of the maximum frequency (E1-04).

No.	Name	Setting Range	Default
b5-06	PID Output Limit	0.0 to 100.0%	100.0%

■ b5-07: PID Offset Adjustment

Sets the offset added to the PID controller output. Set as a percentage of the maximum frequency.

No.	Name	Setting Range	Default
b5-07	PID Offset Adjustment	-100.0 to 100.0%	0.0%

■ b5-08: PID Primary Delay Time Constant

Sets the time constant for the filter applied to the output of the PID controller. Normally, change is not required.

No.	Name	Setting Range	Default
b5-08	PID Primary Delay Time Constant	0.00 to 10.00 s	0.00 s

Note: Useful when there is a fair amount of oscillation or when rigidity is low. Set to a value larger than the cycle of the resonant frequency. Increasing this time constant may reduce the responsiveness of the drive.

■ b5-09: PID Output Level Selection

Normally a positive PID input (feedback smaller than setpoint) leads to positive PID output. Parameter b5-09 can be used to reverse the sign of the PID controller output signal.

No.	Parameter Name	Setting Range	Default
b5-09	PID Output Level Selection	0 or 1	0

Setting 0: Normal Output

A positive PID input causes an increase in the PID output (direct acting).

Setting 1: Reverse Output

A positive PID input causes a decrease in the PID output (reverse acting).

上正科技有限公司
購買、維修 此手冊零組件
電話： 037-466333
Email: service@repairtw.com
Line id: @zzzz
www.repairtw.com

■ b5-10: PID Output Gain Setting

Applies a gain to the PID output and can be helpful when the PID function is used to trim the frequency reference (b5-01 = 3 or 4).

No.	Name	Setting Range	Default
b5-10	PID Output Gain Setting	0.00 to 25.00	1.00

■ b5-11: PID Output Reverse Selection

Determines whether a negative PID output reverses the direction of drive operation or not. When the PID function is used to trim the frequency reference (b5-01 = 3 or 4), this parameter has no effect and the PID output will not be limited (same as b5-11 = 1).

No.	Parameter Name	Setting Range	Default
b5-11	PID Output Reverse Selection	0 or 1	0

Setting 0: Reverse Disabled

Negative PID output will be limited to 0 and the drive output will be stopped.

Setting 1: Reverse Enabled

Negative PID output will cause the drive to run in the opposite direction.

■ PID Feedback Loss Detection

The PID feedback loss detection function can detect broken sensors or broken sensor wiring. It should be used whenever PID control is enabled to prevent critical machine conditions (e.g., acceleration to max. frequency) caused by a feedback loss.

Feedback loss can be detected in two ways:

- **Feedback Low Detection**
  Detected when the feedback falls below a certain level for longer than the specified time. This function is set up using parameters b5-12 to b5-14.

- **Feedback High Detection**
  Detected when the feedback rises beyond a certain level for longer than the specified time. This function is set up using parameters b5-12, b5-36, and b5-37.

The following figure explains the working principle of feedback loss detection when the feedback signal is too low. Feedback high detection works in the same way.

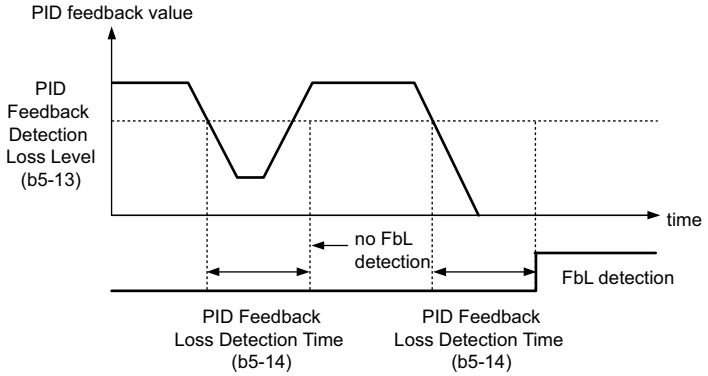

Figure 5.24 PID Feedback Loss Detection

■ b5-12: PID Feedback Loss Detection Selection

Enables or disables the feedback loss detection and sets the operation when a feedback loss is detected.

No.	Parameter Name	Setting Range	Default
b5-12	PID Feedback Loss Detection Selection	0 to 5	0

上正科技有限公司
購買、維修 此手冊零組件
電話 03xxxxxx
Email service@repairtw.com
Line id: @zzzz
www.repairtw.com

Setting 0: Digital Output Only

A digital output set for "PID feedback low" (H2-☐☐ = 3E) will be triggered if the PID feedback value is below the detection level set to b5-13 for the time set to b5-14 or longer. A digital output set for "PID feedback high" (H2-☐☐ = 3F) will be triggered if the PID feedback value is beyond the detection level set to b5-36 for longer than the times set to b5-37. Neither a fault nor an alarm is displayed on the digital operator. The drive will continue operation. When the feedback value leaves the loss detection range, the output is reset.

Setting 1: Feedback Loss Alarm

If the PID feedback value falls below the level set to b5-13 for longer than the time set to b5-14, a "FBL - Feedback Low" alarm will be displayed and a digital output set for "PID feedback low" (H2-☐☐ = 3E) will be triggered. If the PID feedback value exceeds the level set to b5-36 for longer than the time set to b5-37, a "FBH - Feedback High" alarm will be displayed and a digital output set for "PID feedback high" (H2-☐☐ = 3F) will be triggered. Both events trigger an alarm output (H1-☐☐ = 10). The drive will continue operation. When the feedback value leaves the loss detection range, the alarm and outputs are reset.

Setting 2: Feedback Loss Fault

If the PID feedback value falls below the level set to b5-13 for longer than the time set to b5-14, a "FbL - Feedback Low" fault will be displayed. If the PID feedback value exceeds the level set to b5-36 for longer than the time set to b5-37, a "FbH - Feedback High" fault will be displayed. Both events trigger a fault output (H1-☐☐ = E) and cause the drive to stop the motor.

Setting 3: Digital output only, even if PID is disabled by digital input

Same as b5-12 = 0. Detection is still active even if PID is disabled by a digital input (H1-☐☐ = 19).

Setting 4: Feedback loss alarm, even if PID is disabled by digital input

Same as b5-12 = 1. Detection is still active even if PID is disabled by a digital input (H1-☐☐ = 19).

Setting 5: Feedback loss fault, even if PID is disabled by digital input

Same as b5-12 = 2. Detection is still active even if PID is disabled by a digital input (H1-☐☐ = 19).

■ b5-13: PID Feedback Low Detection Level

Sets the feedback level used for PID feedback low detection. The PID feedback has to fall below this level for longer than the time b5-14 before feedback loss is detected.

No.	Name	Setting Range	Default
b5-13	PID Feedback Low Detection Level	0 to 100%	0%

■ b5-14: PID Feedback Low Detection Time

Sets the time that the PID feedback has to fall below b5-13 before feedback loss is detected.

No.	Name	Setting Range	Default
b5-14	PID Feedback Low Detection Time	0.0 to 25.5 s	1.0 s

■ b5-36: PID Feedback High Detection Level

Sets the feedback level used for PID feedback high detection. The PID feedback has to exceed this level for longer than the time b5-37 before feedback loss is detected.

No.	Name	Setting Range	Default
b5-36	PID Feedback High Detection Level	0 to 100%	100%

■ b5-37: PID Feedback High Detection Time

Sets the time for that the PID feedback has to exceed b5-36 before feedback loss is detected.

No.	Name	Setting Range	Default
b5-37	PID Feedback High Detection Time	0.0 to 25.5 s	1.0 s

中正科技有限公司
購買、維修 此手冊零組件
電話： 937-466383
Email: service@repairtw.com
Line id: @zzzz
www.repairtw.com

■ PID Sleep

The PID Sleep function stops the drive when the PID output or the frequency reference falls below the PID Sleep operation level for a certain time. The drive will resume operating once the PID output or frequency reference rises above the PID Sleep operation level for the specified time. An example of PID Sleep operation appears in the figure below.

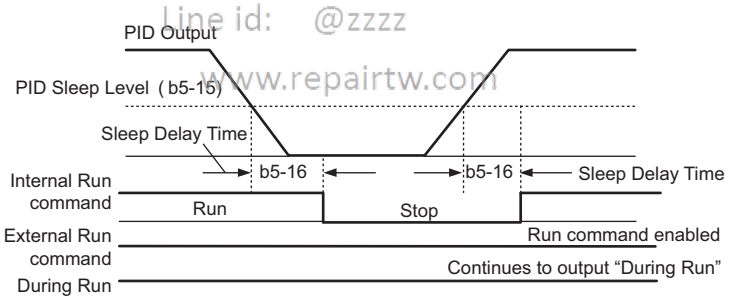

Figure 5.25 PID Sleep Operation

Notes on using the PID Sleep function

- The PID Sleep function is always active, even if PID control is disabled.
- The PID Sleep function stops the motor according to the stopping method in b1-03.

The parameters necessary that control the PID Sleep function are explained below.

■ b5-15: PID Sleep Function Start Level

Sets the level that triggers PID Sleep.

The drive goes into Sleep mode if the PID output or frequency reference is smaller than b5-15 for longer than the time set in b5-16. It resumes the operation when the PID output or frequency reference is above b5-15 for longer than the time set in b5-16.

No.	Name	Setting Range	Default
b5-15	PID Sleep Function Start Level	0.0 to 400.0 Hz	0.0 Hz

■ b5-16: PID Sleep Delay Time

Sets the delay time to activate or deactivate the PID Sleep function.

No.	Name	Setting Range	Default
b5-16	PID Sleep Delay Time	0.0 to 25.5 s	0.0 s

■ b5-17: PID Accel/Decel Time

The PID acceleration/deceleration time is applied on the PID setpoint value.

As the normal acceleration times C1-☐☐ are applied after the PID output, they reduce the responsiveness of the system and can cause hunting or overshoot and undershoot when the setpoint changes quickly. Using the PID acceleration/deceleration time instead helps to avoid such problems.

The PID acceleration/deceleration time can be canceled using a digital input programmed for "PID SFS cancel" (H1-☐☐ = 34).

No.	Name	Setting Range	Default
b5-17	PID Accel/Decel Time	0.0 to 6000.0 s	0.0 s

■ b5-18: PID Setpoint Selection

Enables or disables parameter b5-19 for PID setpoint.

No.	Parameter Name	Setting Range	Default
b5-18	PID Setpoint Selection	0 or 1	0

Setting 0: Disabled

Parameter b5-19 is not used as the PID setpoint.

Setting 1: Enabled

Parameter b5-19 is used as PID setpoint.

上正科技有限公司
購買、維修 此手冊零組件
電話： 037-466333
Email: service@repairtw.com
Line id: @zzzz
www.repairtw.com

■ b5-19: PID Setpoint Value

Used as the PID setpoint if parameter b5-18 = 1.

No.	Name	Setting Range	Default
b5-19	PID Setpoint Value	0.00 to 100.00%	0.00%

■ b5-20: PID Setpoint Scaling

Determines the units that the PID setpoint (b5-19) is set in and displayed. Also determines the units for monitors U5-01 and U5-04.

No.	Parameter Name	Setting Range	Default
b5-20	PID Setpoint Scaling	0 to 3	1

Setting 0: Hz

The setpoint and PID monitors are displayed in Hz with a resolution of 0.01 Hz.

Setting 1: %

The setpoint and PID monitors are displayed as a percentage with a resolution of 0.01%.

Setting 2: r/min

The setpoint and PID monitors are displayed in r/min with a resolution of 1 r/min.

Setting 3: User Defined

Parameters b5-38 and b5-39 determine the units and resolution used to display the values the setpoint in b5-19, and PID monitors U1-01 and U1-04.

■ b5-34: PID Output Lower Limit

Sets the minimum possible PID controller output as a percentage of the maximum output frequency (E1-04). The lower limit is disabled when set to 0.00%

No.	Name	Setting Range	Default
b5-34	PID Output Lower Limit	-100.0 to 100.0%	0.00%

■ b5-35: PID Input Limit

Sets the maximum allowed PID input as a percentage of the maximum output frequency (E1-04). Parameter b5-35 acts as a bipolar limit.

No.	Name	Setting Range	Default
b5-35	PID Input Limit	0 to 1000.0%	1000.0%

■ b5-38, b5-39: PID Setpoint User Display, PID Setpoint Display Digits

When parameter b5-20 is set to 3, the parameters b5-38 and b5-39 can be used to set a user defined display for the PID setpoint (b5-19) and PID feedback monitors (U5-01, U5-04).

Parameter b5-38 determines the display value when the maximum frequency is output. Parameter b5-39 determines the number of digits. The setting value is equal to the number of decimal places.

No.	Name	Setting Range	Default
b5-38	PID Setpoint User Display	1 to 60000	Determined by b5-20
b5-39	PID Setpoint Display Digits	0 to 3	Determined by b5-20

上正科技有限公司
購買、維修 此手冊零組件
電話： 037-466333
Email: service@repairtw.com
Line id: @zzzz
www.repairtw.com

■ b5-40: Frequency Reference Monitor Content During PID

Sets the content of the frequency reference monitor display (U1-01) when PID control is active.

No.	Name	Setting Range	Default
b5-40	Frequency Reference Monitor Content During PID	0 or 1	0

Setting 0: Frequency Reference after PID

Monitor U1-01 displays the frequency reference increased or reduced for the PID output.

Setting 1: Frequency Reference

Monitor U1-01 displays the frequency reference value.

■ Fine-Tuning PID

Once PID control parameters have been set, fine-tuning may be required. Follow the directions below.

Table 5.11 PID Fine Tuning

Goal	Tuning Procedure	Result
Overshoot must be suppressed	• Reduce the derivative time (b5-05) • increase the integral time (b5-03)	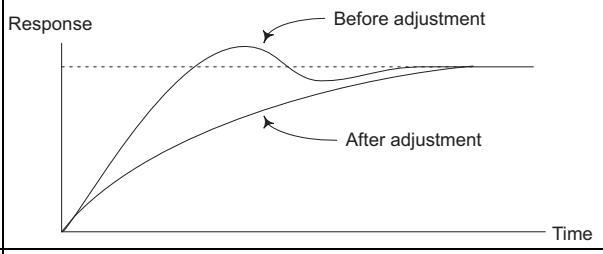
Quickly achieve stability, and some overshoot is permissible	• Decrease the integral time (b5-03) • Increase the derivative time (b5-05)	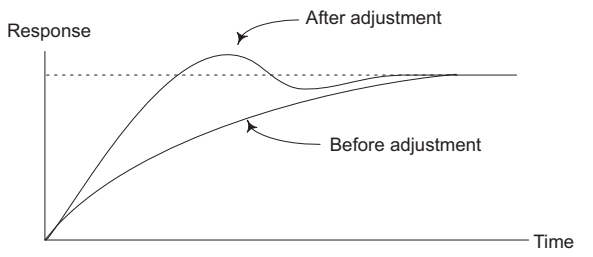

Goal	Tuning Procedure	Result
Suppress long cycle oscillations (longer than the integral time setting)	• Increase the integral time (b5-03)	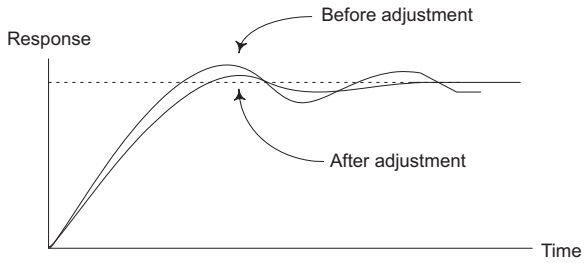
Suppress short cycle oscillations	• If oscillation cycle time is close to the derivative time, the derivative part is likely having too much influence. Reduce the derivative time (b5-05). • If the derivative time is set to 0.00 s and oscillations are still a problem, try reducing the proportional gain (b5-02) or try increasing the PID primary delay time (b5-08)	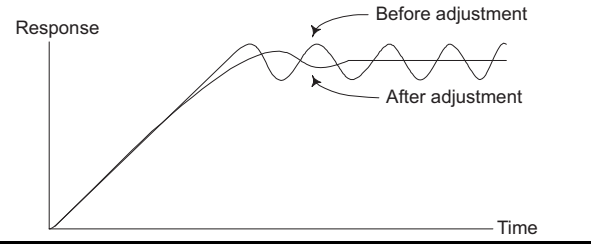

◆ b6: Dwell Function

The Dwell function is used to temporarily hold the frequency reference at a predefined value for a set time, then continue accelerating or decelerating.

If used with induction motors, the Dwell function can help prevent speed loss when starting and stopping a heavy load. If running a PM motor in V/f control, the pause in acceleration allows the PM motor rotor to align with the stator field of the motor, thus reducing the starting current.

上正科技有限公司
購買、維修 此手冊零組件
電話： 037-466333
Email: service@repairtw.com
Line id: @zzzz
www.repairtw.com

The figure below shows how the Dwell function works.

Note: Using the Dwell function requires that the stopping method for the drive be set to “Ramp to stop” (b1-03 = 0).

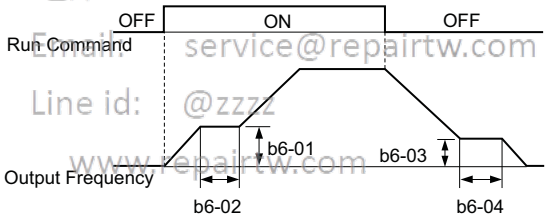

Figure 5.26 Dwell Function at Start and Stop

■ b6-01, b6-02: Dwell Reference, Dwell Time at Start

b6-01 determines the frequency that is held or the time set in b6-02 during acceleration.

No.	Name	Setting Range	Default
b6-01	Dwell Reference at Start	0.0 to 400.0 Hz	0.0 Hz
b6-02	Dwell Time at Start	0.0 to 10.0 s	0.0 s

■ b6-03, b6-04: Dwell Reference, Dwell Time at Stop

Parameter b6-03 determines the frequency that is held for the time set in b6-04 during deceleration.

No.	Name	Setting Range	Default
b6-03	Dwell Reference at Stop	0.0 to 400.0 Hz	0.0 Hz
b6-04	Dwell Time at Stop	0.0 to 10.0 s	0.0 s

◆ b7: Droop Control (CLV, CLV/PM)

Droop control can automatically balance the load level between two motors that drive the same load, such as in traverse cranes applications. It must be activated in one of the two drives that control these motors. The drive in which Droop control is activated will automatically reduce the speed if the torque reference rises, and increase the speed if the torque reference falls again, thereby shifting the load from one motor to the other.

Note: Disable Feed Forward (n5-01 = 0) whenever using Droop control.

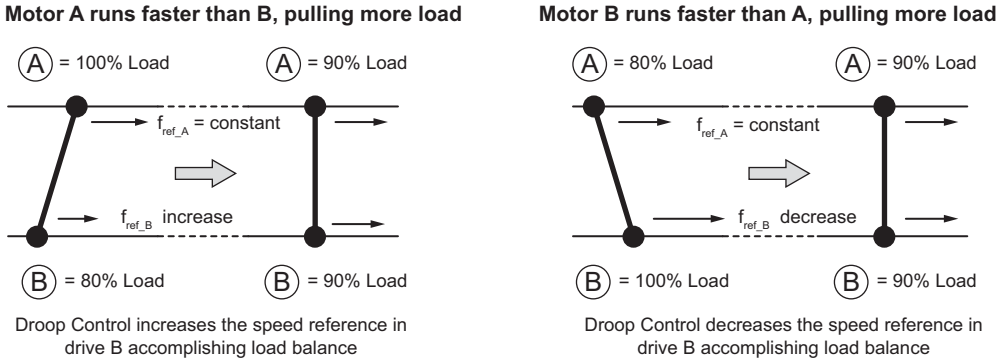

Figure 5.27 Droop Control in a Traverse Application

■ b7-01: Droop Control Gain

Sets the amount of speed reduction when the torque reference is 100%. The gain is set as a percentage of the maximum output frequency. A setting of 0.0% disables the Droop control function.

No.	Parameter Name	Setting Range	Default
b7-01	Droop Control Gain	0.0 to 100.0%	0.0%

上禾科技有限公司
購買、維修 此手冊零組件
電話：037-166333
Email: service@repairtw.com
Line id: @zzzz
www.repairtw.com

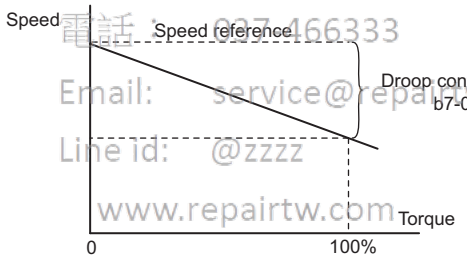

Figure 5.28 Droop Control Gain

■ b7-02: Droop Control Delay Time

The setting in b7-02 adjusts the responsiveness of Droop control. Reduce the setting if the reaction time is too long, and increase it if hunting occurs.

No.	Parameter Name	Setting Range	Default
b7-02	Droop Control Delay Time	0.03 to 2.00 s	0.05 s

■ b7-03: Droop Control Limit Selection

Enables or disables the droop control limit.

No.	Parameter Name	Setting Range	Default
b7-03	Droop Control Limit Selection	0, 1	1

Setting 0: Disabled
Setting 1: Enabled

◆ b8: Energy Saving

The Energy Saving feature improves overall system operating efficiency by operating the motor at its most efficient level.

Note: **1.** Energy Saving is mainly designed for applications with variable torque (Normal Duty) but is not appropriate for applications where the load may suddenly increase.
2. As the performance of the Energy Saving function strongly depends on the accuracy of the motor data, always perform Auto-Tuning and make sure the motor data has been entered correctly before using this function.

■ b8-01: Energy Saving Control Selection

Enables or disables the Energy Saving function.

No.	Parameter Name	Setting Range	Default
b8-01	Energy Saving Control Selection	0 or 1	Determined by A1-02

Setting 0: Disabled
Setting 1: Enabled

■ b8-02: Energy Saving Gain (OLV, CLV)

Sets the gain level for Energy Saving. A higher value results in lower magnetization of the motor and thereby less energy consumption. However, if b8-02 is too low, the motor may stall.

No.	Name	Setting Range	Default
b8-02	Energy Saving Gain	0.0 to 10.0	Determined by A1-02

■ b8-03: Energy Saving Control Filter Time Constant (OLV, CLV)

Parameter b8-03 sets the response time for Energy Saving. Although lowering this value allows for a quicker response, instability may result if it is too low.

工正科技有限公司
購買、維修 此手冊零組件
電話： 037-466333
Email: service@repairtw.com
Line id: @zzz
www.repairtw.com

No.	Name	Setting Range	Default
b8-03	Energy Saving Control Filter Time Constant	0.00 to 10.00 s	Determined by A1-02 and o2-04

■ b8-04: Energy Saving Coefficient Value (V/f, V/f w/PG)

Parameter b8-04 is used to fine-tune Energy Saving control. The default setting depends on the capacity of the drive. Adjust this setting while viewing the output power monitor (U1-08) and running the drive with a light load.

A low setting results in less output voltage and less energy consumption, but too small a value will cause the motor to stall.

No.	Name	Setting Range	Default
b8-04	Energy Saving Coefficient Value	0.00 to 655.00	Determined by C6-01, E2-11, and o2-04

Note: This default value changes if the motor rated capacity set to E2-11 is changed. The Energy Saving coefficient is set automatically when Auto-Tuning for Energy Saving is performed (*Refer to Auto-Tuning on page 109*).

■ b8-05: Power Detection Filter Time (V/f, V/f w/PG)

The Energy Saving function continuously searches out the lowest output voltage in order to achieve minimum output power. Parameter b8-05 determines how often the output power is measured in ms.

Reducing this setting will increase the response time. If the filter time is too short, the motor may become unstable with a lighter load.

No.	Name	Setting Range	Default
b8-05	Power Detection Filter Time	0 to 2000 ms	20 ms

■ b8-06: Search Operation Voltage Limit (V/f, V/f w/PG)

Sets the voltage limit for the optimal output voltage detection of Speed Search as a percentage of the maximum output voltage. During the search operation, the drive will keep the output voltage above this level to prevent motor stalling.

Note: If set too low, the motor may stall with a sudden increase to the load. Disabled when b8-06 = 0. Setting this value to 0 does not disable Energy Saving.

No.	Name	Setting Range	Default
b8-06	Search Operation Voltage Limit	0 to 100%	0%

◆ b9: Zero Servo

The Zero Servo function is a position loop that can be used in CLV and CLV/PM control modes to lock the motor at a certain position.

It must be activated using a digital input set for H1-☐☐ = 72. The drive will decelerate when this input is closed. Once the motor speed falls below the level set in parameter b2-01, the drive goes into the Zero Servo mode and holds the current position. When the input assigned to trigger the Zero Servo function is released and the Run command is still present, the drive reaccelerates.

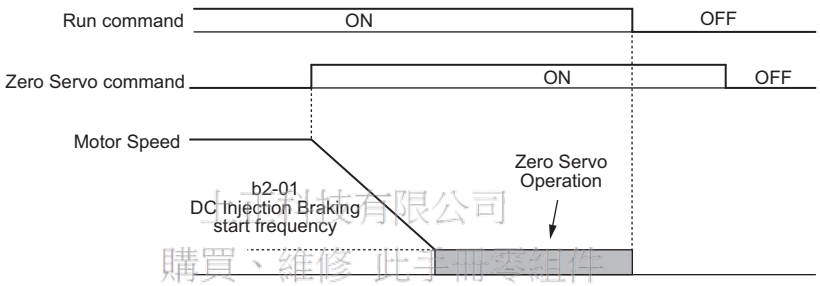

Figure 5.29 Zero Servo Operation

上揚科技有限公司
購買、維修 此手冊零組件
電話： 037-466333
Email: service@repairtw.com
Line id: @zzzz
www.repairtw.com

When Zero Servo is active, the deviation between the rotor position and the zero position is displayed in monitor U6-22 (monitor value must be divided by 4 to get the deviation in actual encoder pulses).

A digital output programmed for "Zero Servo complete" (H2-☐☐ = 72) is turned on when the rotor position is within the zero position, plus or minus the Zero Servo completion width set in parameter b9-02.

Note:
1. The Run command must remain on when using the Zero Servo function. If the Run command is switched off, then Zero Servo will no longer be able to hold the load in place.
2. When the Zero Servo command has shut off, the Zero Servo Completion digital output width also shuts off.
3. Avoid using Zero Servo to lock 100% load for long periods, as this can trigger a fault. If such loads need to be held in place for long periods, either make sure the current is less than 50% of the drive rated current during Zero Servo, or use a larger capacity drive.
4. If the load rotates the motor when using CLV/PM, a dv4 fault may occur. To prevent this, either increase the Zero Servo gain (b9-01) or increase the number of pulses set to F1-19 that are required to trigger dv4.

■ b9-01: Zero Servo Gain

Parameter b9-01 adjusts the responsiveness of the Zero Servo position loop. Increase the value if the response is too slow and the deviation from the zero position rises too high when load is applied. Decrease the value if vibrations occur during Zero Servo operation.

Note: Before adjusting the Zero Servo gain, make sure the ASR parameters (C5-☐☐) are set up properly and vibration or hunting does not occur when running with a zero speed reference.

No.	Name	Setting Range	Default
b9-01	Zero Servo Gain	0 to 100	5

■ b9-02: Zero Servo Completion Width

Sets the range around zero position within that the Zero Servo complete output signal (H2-☐☐ = 72) is switched on during Zero Servo operation. The value in b9-02 must be set to the allowable deviation in actual encoder pulses multiplied by four.

No.	Name	Setting Range	Default
b9-02	Zero Servo Completion Width	0 to 16383	10

5.3 C: Tuning

C parameters are used to set the acceleration and deceleration characteristics, as well as S-curves. Other parameters in this group cover settings for slip compensation, torque compensation, and carrier frequency.

◆ C1: Acceleration and Deceleration Times

■ C1-01 to C1-08: Accel, Decel Times 1 to 4

Four different sets of acceleration and deceleration times can be set in the drive. They can be selected by digital inputs, by the motor selection, or can be switched automatically. Acceleration time parameters always set the time to accelerate from 0 Hz to the maximum output frequency (E1-04). Deceleration time parameters always set the time to decelerate from maximum output frequency to 0 Hz. C1-01 and C1-02 are the default active accel/decel settings.

No.	Parameter Name	Setting Range	Default
C1-01	Acceleration Time 1	0.0 to 6000.0 s <1>	10.0 s
C1-02	Deceleration Time 1		
C1-03	Acceleration Time 2		
C1-04	Deceleration Time 2		
C1-05	Acceleration Time 3 (Motor 2 Accel Time 1)		
C1-06	Deceleration Time 3 (Motor 2 Decel Time 1)		
C1-07	Acceleration Time 4 (Motor 2 Accel Time 2)		
C1-08	Deceleration Time 4 (Motor 2 Accel Time 2)		

<1> The setting range for the acceleration and deceleration times is determined by the accel/decel time setting units in C1-10. For example, if the time is set in units of 0.01 s (C1-10 = 0), the setting range becomes 0.00 to 600.00 s.

Switching Acceleration Times by Digital Input

Accel/decel times 1 are active by default if no input is set. The accel/decel times 2, 3, and 4 can be activated by digital inputs (H1-□□ = 7 and 1A) as explained in *Table 5.12*.

上能科技有限公司
購買、維修 此手冊零組件
電話：037-466233
Email: service@repairtw.com
Line id: @zzzz
www.repairtw.com

Table 5.12 Accel/Decel Time Selection by Digital Input

Accel/Decel Time Sel. 1 H1-□□ = 7	Accel/Decel Time Sel. 2 H1-□□ = 1A	Active Times	
		Acceleration	Deceleration
0	0	C1-01	C1-02
1	0	C1-03	C1-04
0	1	C1-05	C1-06
1	1	C1-07	C1-08

Figure 5.30 shows an operation example for changing accel/decel. times. The example below requires that the stopping method be set for “Ramp to stop” (b1-03 = 0).

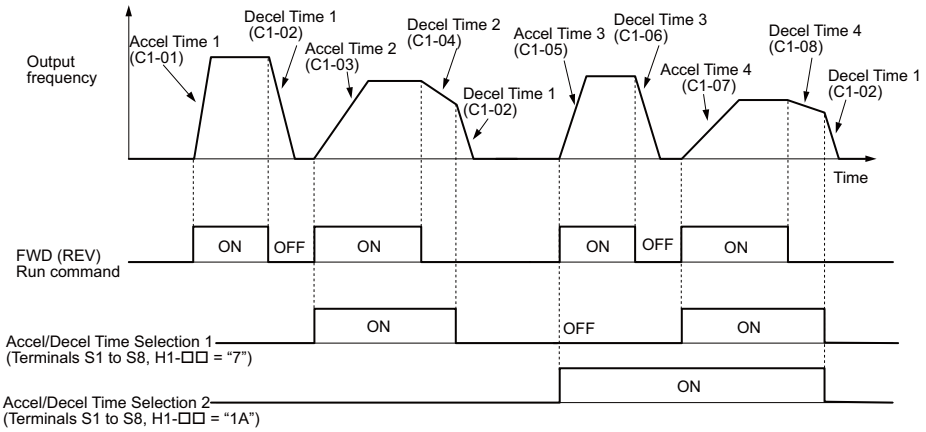

Figure 5.30 Timing Diagram of Accel/Decel Time Change

Switching Acceleration and Deceleration Times by Motor Selection

When switching between motor 1 and 2 using a digital input (H1-☐☐= 16), parameters C1-01 to C1-04 become accel/decel time 1 and 2 for motor 1, while C1-05 to C1-08 become accel/decel time 1 and 2 for motor 2. Accel/decel times 1 and 2 can be switched for each motor using a digital inputs set to H1-☐☐ = 7 like shown in *Table 5.13*.

Note: **1.** The motor 2 selection function cannot be used when PM motor is used.
2. The digital input setting "Accel/Decel time 2 selection" (H1-☐☐ = 1A) cannot be used together with motor 1/2 switching. Trying to do so triggers an oPE03 error, indicating a contradictory multifunction input settings.

Table 5.13 Motor Switching and Accel/Decel Time Combinations

Accel/Decel Time 1 (H1-☐☐ = 7)	Motor 1 Selected (Terminal set to H1-☐☐=16 OFF)		Motor 2 Selected (Terminal set to H1-☐☐=16 ON)	
	Accel	Decel	Accel	Decel
Open	C1-01	C1-02	C1-05	C1-06
Closed	C1-03	C1-04	C1-07	C1-08

Switching Accel/Decel Times by a Frequency Level

The drive can switch between different acceleration and deceleration times automatically. The drive will switch from accel/decel time 4 in C1-07 and C1-08 to the default accel/decel time in C1-01 and C1-02 (C1-05 and C1-06 for motor 2) when the output frequency exceeds the frequency level set in parameter C1-11. When it falls below this level, the accel/decel times are switched back. *Figure 5.31* shows an operation example.

Note: Acceleration and deceleration times selected by digital inputs have priority over the automatic switching by the frequency level set to C1-11. For example, if accel/decel time 2 is selected, the drive will use this time only and not switch from accel/decel time 4 to the selected one.

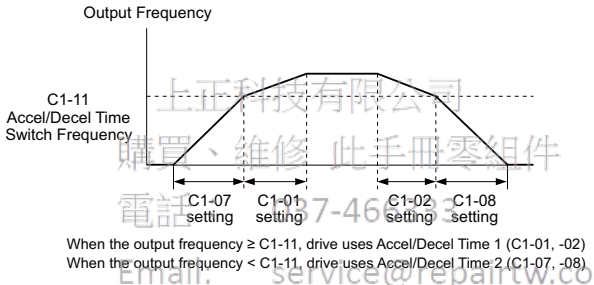

Figure 5.31 Accel/Decel Time Switching Frequency

■ C1-11: Accel/Decel Time Switching Frequency

Sets the frequency at which the drive switches between accel/decel time settings. *Refer to Switching Accel/Decel Times by a Frequency Level on page 166*.

No.	Parameter Name	Setting Range	Default
C1-11	Accel/Decel Time Switching Frequency	0.0 to 400.0 Hz	0.0 Hz

Note: Setting C1-11 to 0.0 Hz disables this function.

■ C1-09: Fast Stop Time

Parameter C1-09 will set a special deceleration that is used when certain faults occur or that can be operated by closing a digital input configured as H1-☐☐ = 15 (N.O. input) or 17 (N.C. input). The input does not have to be closed continuously, even a momentary closure will trigger the Fast Stop operation. Unlike standard deceleration, once the Fast Stop operation is initiated, the drive cannot be restarted until the deceleration is complete, the Fast Stop input is cleared, and the Run command is cycled.

A digital output programmed for "During Fast Stop" (H2-☐☐ = 4C) will be closed as long as Fast Stop is active.

A Fast Stop can be selected as the action the drive should take when certain faults occur, such as L8-03 (Overheat Pre-Alarm Operation Selection).

No.	Parameter Name	Setting Range	Default
C1-09	Fast Stop Time	0.0 to 6000.0 s <1>	10.0 s

<1> The setting range for the acceleration and deceleration times is determined by the accel/decel time setting units in C1-10. For example, if the time is set in units of 0.01 s (C1-10 = 0), the setting range becomes 0.00 to 600.00 s

NOTICE: *Rapid deceleration can trigger an overvoltage fault. When faulted, the drive output shuts off, and the motor coasts. To avoid*

上正科技有限公司
購買、維修 此手冊零組件
電話 07-46
email: service@repairtw.com
Line id: @zzzz
www.repairtw.com

this uncontrolled motor state and to ensure that the motor stops quickly and safely, set an appropriate Fast Stop time to C1-09.

■ C1-10: Accel/Decel Time Setting Units

Determines the units for the acceleration and deceleration times set to C1-01 through C1-09 using parameter C1-10.

No.	Parameter Name	Setting Range	Default
C1-10	Accel/Decel Time Setting Units	0 or 1	1

Setting 0: 0.01 s units

The accel/decel times are set in 0.01 s units. The setting range will be 0.00 to 600.00 s. If any of the parameters C1-01 to C1-09 is set to 600.1 seconds or more, then C1-10 cannot be set to 0.

Setting 1: 0.1 s units

The accel/decel times are set in 0.1 s units. The setting range will be 0.0 to 6000.0 s.

◆ C2: S-Curve Characteristics

Use S-curve characteristics to smooth acceleration and deceleration and to minimize abrupt shock to the load. Set S-curve characteristic time during acceleration/deceleration at start and acceleration/deceleration at stop. If the STo fault (Hunting Detection) occurs when starting a PM motor, try increasing the value set to C2-01.

■ C2-01 to C2-04: S-Curve Characteristics

C2-01 through C2-04 set separate S-curves for each section of the acceleration or deceleration.

No.	Parameter Name	Setting Range	Default
C2-01	S-Curve Characteristic at Accel Start	0.00 to 10.00 s	Determined by A1-02
C2-02	S-Curve Characteristic at Accel End		0.20 s
C2-03	S-Curve Characteristic at Decel Start		0.20 s
C2-04	S-Curve Characteristic at Decel End		0.00 s

上正科技有限公司
購買、維修 此手冊零組件
電話： 037-466333
Email: service@repairtw.com
Line id: @zzzz
www.repairtw.com

Figure 5.32 explains how S-curves are applied.

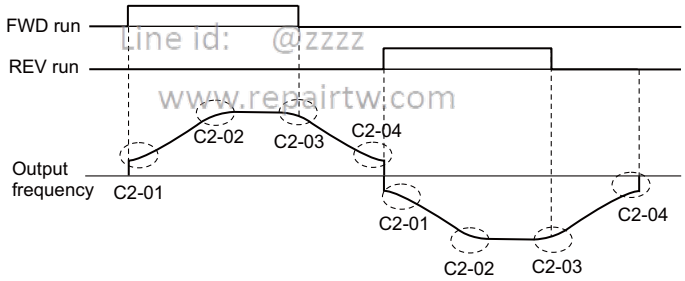

Figure 5.32 S-Curve Timing Diagram - FWD/REV Operation

Setting the S-curve will increase the acceleration and deceleration times.

Actual accel time = accel time setting + (C2-01 + C2-02) / 2

Actual decel time = decel time setting + (C2-03 + C2-04) / 2

◆ C3: Slip Compensation

The Slip Compensation function improves the speed accuracy of an induction motor. By adjusting the output frequency in accordance with the motor load, it compensates the slip and makes the motor speed equal to the frequency reference.

Note: Perform Auto-Tuning and make sure that the motor rated current (E2-01), the motor rated slip (E2-02), and the no-load current (E2-03) have all been set properly before making any adjustments to slip compensation parameters.

■ C3-01: Slip Compensation Gain

This parameter sets the gain for the motor slip compensation function. Although this parameter rarely needs to be changed, adjustments might be needed under the following circumstances:

- If the motor at constant speed is slower than the frequency reference, increase C3-01.

• If the motor at constant speed is faster than the frequency reference, decrease C3-01.

No.	Parameter Name	Setting Range	Default
C3-01	Slip Compensation Gain	0.0 to 2.5	Determined by A1-02

Note: Default setting is 0.0 in V/f Control (A1-02 = 0), and 1.0 in Open Loop Vector Control (A1-02 = 2). In Closed Loop Vector Control, slip compensation is used correct inaccuracies that can result from temperature fluctuation in the rotor.

■ C3-02: Slip Compensation Primary Delay Time

Adjusts the filter on the output side of the slip compensation function. Although this parameter rarely needs to be changed, adjustment may help in the following situations:

• Decrease the setting when the slip compensation response is too slow.
• Increase this setting when speed is unstable.

No.	Parameter Name	Setting Range	Default
C3-02	Slip Compensation Primary Delay Time	0 to 10000 ms	Determined by A1-02

Note: Default for V/f Control (A1-02 = 0) is 2000 ms. Default for Open Loop Vector Control (A1-02 = 2) is 200 ms.

■ C3-03: Slip Compensation Limit

Sets the upper limit for the slip compensation function as a percentage of the motor rated slip (E2-02).

No.	Parameter Name	Setting Range	Default
C3-03	Slip Compensation Limit	0 to 250%	200%

The slip compensation limit is constant throughout the constant torque range (frequency reference ≤ E1-06). In the constant power range (frequency reference ≥ E1-06), it is increased based on C3-03 and the output frequency as shown in the following diagram.

正亞科技有限公司
購買、維修 此手冊零組件
電話： 037-466333
Email: service@repairtw.com
Line id: @zzzz
www.repairtw.com

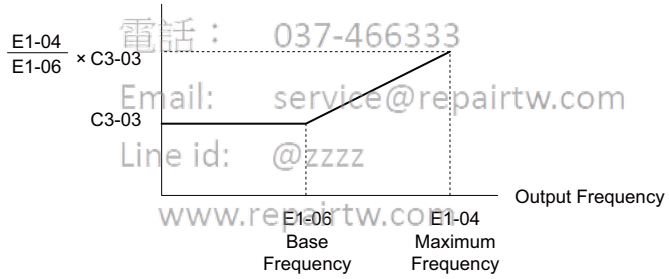

Figure 5.33 Slip Compensation Limit

■ C3-04: Slip Compensation Selection during Regeneration

Enables or disables slip compensation during regenerative operation. When slip compensation during regeneration has been activated and a regenerative load is applied, it might be necessary to use a dynamic braking option (braking resistor, braking resistor unit, or braking unit).

Even if enabled, this function does not operate when the output frequency is too low.

No.	Parameter Name	Setting Range	Default
C3-04	Slip Compensation Selection during Regeneration	0 to 2	0

Setting 0: Disabled

Slip compensation is not provided. Depending on the load and mode of operation, the actual motor speed will be lower or higher than the frequency reference.

Setting 1: Enabled (6 kHz and above)

Slip compensation is enabled during regenerative operation. It will not be active at output frequencies below 6 Hz.

Setting 2: Enabled (compensation provided wherever possible)

Slip compensation is enabled during regenerative operation, and at frequencies as low as 2 Hz. The drive uses the motor rated slip set in E2-02 to automatically calculate the frequency range where compensation will be disabled.

■ C3-05: Output Voltage Limit Operation Selection

Determines if the motor flux reference is automatically reduced when output voltage reaches the saturation range.

If the input power supply voltage is low or the motor has a high voltage rating, this function can help improve the speed precision when moving heavy loads at high speeds. When this function is enabled, the reduction in flux causes a slightly higher current at high speed. Keep this in mind when selecting the drive.

No.	Parameter Name	Setting Range	Default
C3-05	Output Voltage Limit Operation Selection	0 or 1	0

Setting 0: Disabled

Setting 1: Enabled

■ C3-21: Motor 2 Slip Compensation Gain

Used to improve speed accuracy for motor 2. Functions in the same way that C3-01 functions for motor 1.

Adjust this parameter only after the motor rated current (E4-01), motor rated slip (E4-02), and the motor no-load current (E4-03) have all been set.

Refer to *C3-01: Slip Compensation Gain on page 167* for details on adjusting this parameter.

No.	Parameter Name	Setting Range	Default
C3-21	Motor 2 Slip Compensation Gain	0.0 to 2.5	Determined by E3-01

Note: Default setting is 0.0 in V/f Control (A1-02 = 0). Default setting is 1.0 in Open Loop Vector Control (A1-02 = 2) and Closed Loop Vector Control (A1-02 = 3). In Closed Loop Vector Control, slip compensation gain acts as an adaptable gain.

■ C3-22: Motor 2 Slip Compensation Primary Delay Time

Functions for motor 2 in the same way that C3-02 functions for motor 1.

Refer to *C3-02: Slip Compensation Primary Delay Time on page 168* for instructions on how to adjust this parameter.

No.	Parameter Name	Setting Range	Default
C3-22	Motor 2 Slip Compensation Primary Delay Time	0 to 10000 ms	Determined by A1-02

Note: The default for V/f Control (A1-02 = 0) is 2000 ms. The default for Open Loop Vector Control (A1-02 = 2) is 200 ms.

■ C3-23: Motor 2 Slip Compensation Limit

Sets the upper limit for the slip compensation function as a percentage of the motor rated slip (E4-02).

No.	Parameter Name	Setting Range	Default
C3-23	Motor 2 Slip Compensation Limit	0 to 250%	200%

The slip compensation limit is constant throughout the constant torque range (frequency reference ≤ E3-06). In the constant power range (frequency reference ≥ E3-06), it is increased based on C3-23 and the output frequency as shown in the following diagram.

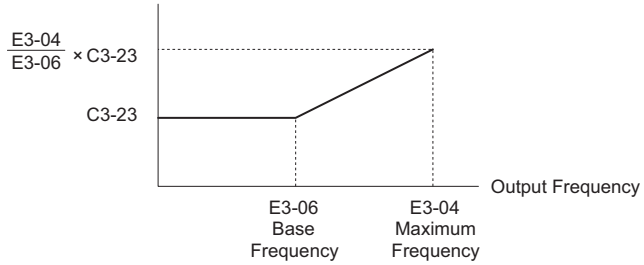

Figure 5.34 Slip Compensation Limit

■ C3-24: Motor 2 Slip Compensation Selection during Regeneration

Functions for motor 2 in the same way that C3-04 functions for motor 1.

Refer to *C3-04: Slip Compensation Selection during Regeneration on page 168* for details on adjusting this parameter.

No.	Parameter Name	Setting Range	Default
C3-24	Motor 2 Slip Compensation Selection during Regeneration	0 to 2	0

Setting 0: Disabled
Setting 1: Enabled (6 kHz and above)
Setting 2: Enabled (compensation provided wherever possible)

◆ C4: Torque Compensation

The torque compensation function compensates for insufficient torque production at start-up or when a load is applied.

Note: Make sure the motor parameters and V/f pattern are set properly before setting torque compensation parameters.

■ C4-01: Torque Compensation Gain

Sets the gain for the torque compensation function.

No.	Parameter Name	Setting Range	Default
C4-01	Torque Compensation Gain	0.00 to 2.50	Determined by A1-02

Torque Compensation in V/f, V/f w/PG, and OLV/PM:

The drive calculates the motor primary voltage loss using the output current and the termination resistor value (E2-05 for IM, E5-05 for PM motors) and then adjusts the output voltage to compensate insufficient torque at start or when load is applied. The effects of this voltage compensation can be increased or decreased using parameter C4-01.

上正科技有限公司
購買 維修 此手冊零組件
電話： 037-466333
Email: service@repairtw.com
Line id: @zzzz
www.repairtw.com

Torque Compensation in OLV:

The drive controls the motor excitation current (d-axis current) and torque producing current (q-axis current) separately. Torque compensation affects the torque producing current only. C4-01 works as a factor of the torque reference value that builds the torque producing current reference.

Adjustment

Although this parameter rarely needs to be adjusted, changing the torque compensation gain in small steps of 0.05 may help in the following situations:

- Increase this setting when using a long motor cable.
- Decrease this setting when motor oscillation occurs.

Adjust C4-01 so that the output current does not exceed the drive rated current.

Note: 1. Refrain from adjusting torque compensation in Open Loop Vector Control, as it can have a negative effect on torque accuracy.
2. Refrain from adjusting this parameter in OLV/PM. Too high a value can cause overcompensation, resulting in motor oscillation.

■ C4-02: Torque Compensation Primary Delay Time

Sets the delay time used for applying torque compensation.

No.	Parameter Name	Setting Range	Default
C4-02	Torque Compensation Primary Delay Time	0 to 60000 ms	Determined by A1-02

Adjustment

Although C4-02 rarely needs to be changed, adjustments may help in the following situations:

- If the motor vibrates, increase C4-02.
- If the motor responds too slowly to changes in the load, decrease C4-02.

■ C4-03: Torque Compensation at Forward Start (OLV)

Sets the amount of torque at start in the forward direction in order to improve motor performance during start with a heavy load. Compensation is applied using the time constant set in parameter C4-05. Enable this function when the load pulls the motor in reverse when starting with a Forward run command. Setting of 0.0% disables this feature.

No.	Parameter Name	Setting Range	Default
C4-03	Torque Compensation at Forward Start	0.0 to 200.0%	0.0%

■ C4-04: Torque Compensation at Reverse Start (OLV)

Sets the amount of torque reference at start in the reverse direction in order to improve motor performance during start with heavy load. Compensation is applied using the time constant set in parameter C4-05. Enable this function if the load pulls the motor in the forward direction when starting with a Reverse run command. Setting 0.0% disables this feature.

No.	Parameter Name	Setting Range	Default
C4-04	Torque Compensation at Reverse Start	-200.0 to 0.0%	0.0%

■ C4-05: Torque Compensation Time Constant (OLV)

This parameter is the time constant for applying the torque compensation at start that is set to C4-03 and C4-04.

No.	Parameter Name	Setting Range	Default
C4-05	Torque Compensation Time Constant	0 to 200 ms	10 ms

■ C4-06: Torque Compensation Primary Delay Time 2 (OLV)

This time constant is used during Speed Search or during regenerative operation. Adjust the value if an overvoltage fault occurs with sudden changes in the load or at the end of acceleration with high inertia load.

上正科技有限公司
購買、維修 此手冊零組件
電話： 037-466333
Email: service@repairtw.com
Line id: @zzzz
www.repairtw.com

No.	Parameter Name	Setting Range	Default
C4-06	Torque Compensation Primary Delay Time 2	0 to 10000 ms	150 ms

Note: If C4-06 is set to a relatively large value, be sure to also increase the setting in n2-03 (AFR Time Constant 2) proportionally.

■ C4-07: Motor 2 Torque Compensation Gain

Functions for motor 2 in the same way that C4-01 functions for motor 1.

Refer to *C3-01: Slip Compensation Gain on page 167* for details on adjusting this parameter.

No.	Parameter Name	Setting Range	Default
C4-07	Motor 2 Torque Compensation Gain	0.00 to 2.50	1.00

◆ C5: Automatic Speed Regulator (ASR)

The ASR is used for controlling the motor speed in V/f w/PG, CLV, AOLV/PM, and CLV/PM control modes. It adjusts the output frequency (V/f w/PG) or torque reference (CLV, AOLV/PM, CLV/PM) in order to minimize the difference between frequency reference and actual motor speed.

The figures below illustrates how ASR works.

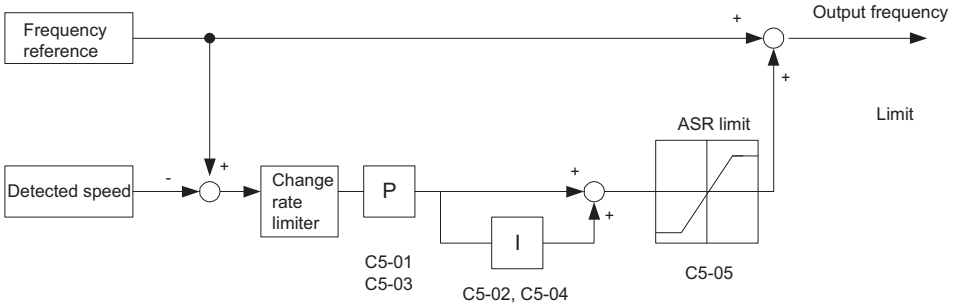

Figure 5.35 Speed Control Block Diagram for V/f Control with PG

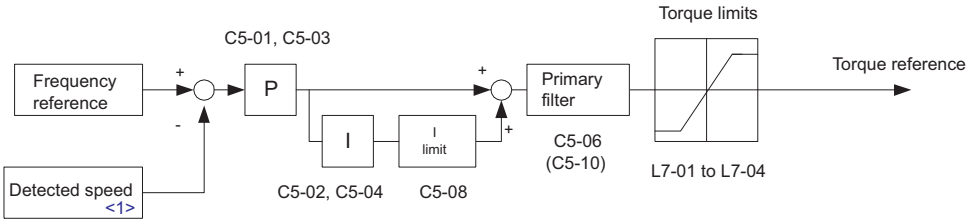

Figure 5.36 Speed Control Block Diagram for CLV, AOLV/PM and CLV/PM

<1> Advanced Open Loop Vector Control for PM motors estimates the speed using the motor model and does not require an encoder feedback signal.

■ Adjusting the ASR Parameters

Before adjusting ASR parameters make sure all motor data have been set up correctly or Auto-Tuning has been performed.

Analog output signals should be used to monitor the frequency reference after softstarter (U1-16) and the motor speed (U1-05) when adjusting the ASR. Refer to ***H4: Multi-Function Analog Outputs on page 239*** for details on setting up analog output functions.

Generally when tuning the ASR, first optimize the ASR gain, then adjust the integral time settings. Always make adjustments with the load connected to the motor.

Adjusting the ASR Parameters in V/f Control with PG

In V/f Control with PG, the ASR settings change between two sets of parameters depending on the motor speed as described in ***C5-01, C5-03 / C5-02, C5-04: ASR Proportional Gain 1, 2 / ASR Integral Time 1, 2 on page 173***.

上正科技有限公司
購買、維修 此手冊零組件
電話： 037-466333
Email: service@repairtw.com
Line id: @2222
www.repairtw.com

Perform the following steps for adjusting ASR parameters:

1. Run the motor at minimum speed and increase ASR gain 2 (C5-03) as much as possible without oscillation.
2. Run the motor at minimum speed and decrease ASR integral time 2 (C5-04) as much as possible without oscillation.
3. Check the output current monitor to make sure that the output current is less than 50% of the drive rated current. If the value is higher than 50%, decrease C5-03 and increase C5-04.
4. Run the motor at maximum speed and increase ASR gain 1 (C5-01) as much as possible without oscillations.
5. Run the motor at maximum speed and decrease ASR integral time 1 (C5-02) as much as possible without oscillations.
6. If higher speed precision and faster response during acceleration or deceleration is required, enable integral control during accel/decel by setting parameter C5-12 to 1. Change the speed and make sure no over/undershoot occurs.

Adjusting the ASR Parameters in CLV, AOLV/PM, and CLV/PM

In CLV, AOLV/PM, and CLV/PM the drive is pre-set to use ASR settings C5-01/02 over the whole speed range. If required by the application, a second set of ASR parameters (C5-03/04) can be automatically activated depending on the motor speed or by using a digital input. Also refer to ***C5-01, C5-03 / C5-02, C5-04: ASR Proportional Gain 1, 2 / ASR Integral Time 1, 2 on page 173***.

Perform the following steps for adjusting ASR parameters:

1. Run the motor at zero speed and increase the ASR gain (C5-01) as much as possible without oscillation.
2. Run the motor at zero speed and decrease the ASR integral time (C5-02) as much as possible without oscillation.
3. Run at the normal operating speed. Check for over/undershoot when changing speed and for any oscillation.
4. Should problems occur in step 3, increase the integral time and reduce the gain.
   Alternatively, use different ASR settings for high and low speed. Set the values from step 1 and 2 to parameters C5-03 and C5-04, then set an ASR switching frequency in parameter C5-07. Run the motor at a speed higher than C5-07 and repeat step 3 while adjusting C5-01 and C5-02.

Solving Problems During ASR Setup

Use ***Table 5.14*** when making adjustments to ASR. Though the parameters listed below are for motor 1, the same changes can be made to the corresponding motor 2 parameters when running a second motor.

Table 5.14 ASR Setup Problems and Corrective Actions

Problem		Possible Solutions
Slow response to speed changes or speed deviation lasts for too long	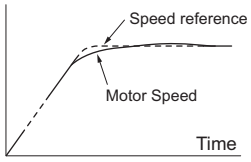	• Increase the ASR gain. • Decrease the integral time.
Overshoot or undershoot at the end of acceleration or deceleration	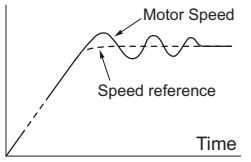	• Decrease the ASR gain. • Increase the integral time.
Vibration and oscillation occur at constant speed	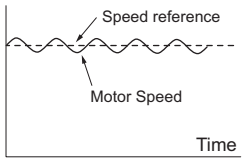	• Decrease the ASR gain. • Increase the integral time. • Increase the ASR delay time (C5-06).
The motor slip is not fully compensated when running in V/f Control with PG	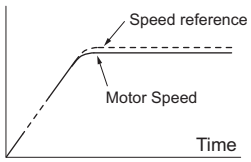	• Check the pulse number set to F1-01 and the gear ratio in F1-12 and F1-13. • Make sure the pulse signal from the encoder is set up properly. • Check monitor U6-04 and check if the ASR is working at its output limit (setting of C5-05). If so, increase C5-05.
Integral operation is enabled in V/f Control with PG (C5-15 = 1) and over/undershoot occurs when changing speed.	-	• Decrease the ASR gain. • Increase the integral time. • If the problem persists, reduce the ASR output limit set in C5-05.
Oscillation at low speed and response is too slow at high speed (or vice versa)	-	• V/f control: Use C5-01/02 and C5-03/04 to set up different ASR settings at minimum and maximum speed. • CLV, AOLV/PM, CLV/PM: Use C5-01, C5-02 and C5-03, C5-04 to define optimal ASR settings for high and low speed. Use C5-07 to define a switching frequency.

上正科技有限公司
購買、維修 此手冊零組件
電話： 037-466333
Email: service@repairtw.com
Line id: @zzzz
www.repairtw.com

■ C5-01, C5-03 / C5-02, C5-04: ASR Proportional Gain 1, 2 / ASR Integral Time 1, 2

These parameters can be used to adjust the responsiveness of the ASR.

Note: C5-01 is automatically set when ASR Tuning is performed (T1-01 = 9 or T2-01 = 9).

No.	Parameter Name	Setting Range	Default
C5-01	ASR Proportional Gain 1	0.00 to 300.00	Determined by A1-02
C5-02	ASR Integral Time 1	0.000 to 10.000 s	Determined by A1-02
C5-03	ASR Proportional Gain 2	0.00 to 300.00	Determined by A1-02
C5-04	ASR Integral Time 2	0.000 to 10.000 s	Determined by A1-02

These parameter settings will function differently depending on the control mode.

V/f Control with PG

Parameters C5-01 and C5-02 determine the ASR characteristics at maximum speed, whereas C5-03 and C5-04 determine the characteristics at minimum speed.

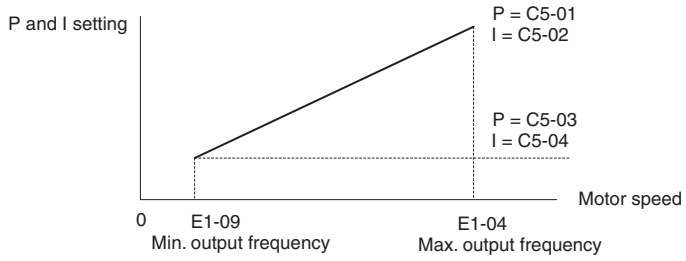

Figure 5.37 ASR Gain and Integral Time in V/fw/PG

CLV, AOLV/PM, and CLV/PM

In these control modes, parameters C5-03 and C5-04 define the ASR gain an integral time at zero speed. The settings in C5-01 and C5-02 are used at speeds above the setting in C5-07. C5-07 is set to 0 as the default so that C5-01 and C5-02 are used over the entire speed range. Also refer to *C5-07: ASR Gain Switching Frequency on page 175*.

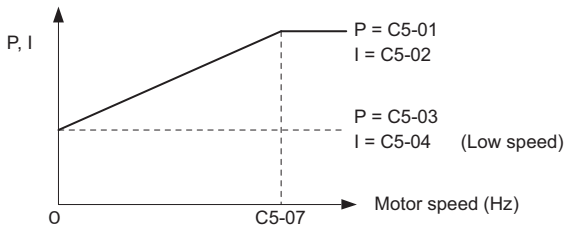

Figure 5.38 Low-speed and High-speed Gain Settings

The gain set in C5-03 can also be activated with a digital input programmed to "ASR gain switch" (H1-☐☐ = 77). When the terminal is open, the drive uses the ASR gain level set by the pattern in the figure above. When the terminal closes, C5-03 is used. The integral time set to C5-02 is used to change linearly between these settings.

The ASR gain switch command from a multi-function input terminal overrides the switching frequency set to C5-07.

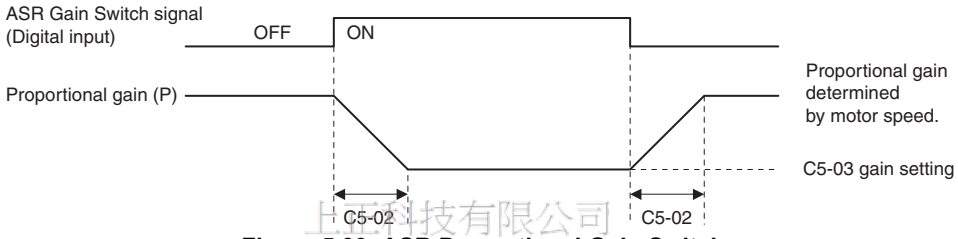

Figure 5.39 ASR Proportional Gain Switch

上揚科技有限公司
購買、維修 此手冊零組件
電話： 037-466333
Email: service@repairtw.com
Line id: @zzzz
www.repairtw.com

ASR Gain Tuning (C5-01, C5-03)

The higher this setting, the faster is the speed response. Too high of a setting can lead to oscillation. In general, this setting should be increased with larger loads in order to minimize the speed deviation.

ASR Integral Time Tuning (C5-02, C5-04)

Determines how fast a continuous speed deviation problem is eliminated. Too long of an integral time makes the speed control less responsive, while a too short of an integral time can cause oscillation.

■ C5-05: ASR Limit

Sets the ASR output limit as a percentage of the maximum output frequency (E1-04). If the motor rated slip is high, the setting might need to be increased to provide proper motor speed control. Use the ASR output monitor U6-04 to determine if ASR is working at the limit set in C5-05. If so, make sure the PG pulses (F1-01), PG gear teeth (F1-12, F1-13), and the PG signal are set correctly before making further changes to C5-05.

No.	Parameter Name	Setting Range	Default
C5-05	ASR Limit	0.0 to 20.0%	5.0%

■ C5-06: ASR Primary Delay Time Constant

This parameter sets the filter time constant for the time from the speed loop to the torque command output.

Increase this setting gradually in increments of 0.01 for loads with low rigidity, or when oscillation is a problem.

Note: This parameter rarely requires adjustment.

No.	Parameter Name	Setting Range	Default
C5-06	ASR Primary Delay Time Constant	0.000 to 0.500 s	Determined by A1-02

■ C5-07: ASR Gain Switching Frequency

Sets the frequency where the drive should switch between ASR proportional gain 1 and 2 (C5-01, C5-03) as well as between integral time 1 and 2 (C5-02, C5-04).

No.	Parameter Name	Setting Range	Default
C5-07	ASR Gain Switching Frequency	0.0 to 400.0 Hz	0.0 Hz

Note: A multi-function input set for the ASR gain switch (H1-□□ = 77) takes priority over the ASR gain switching frequency.

Switching the proportional gain and integral time in the low or high speed range can help stabilize operation and avoid resonance problems. A good switching point is about 80% of the frequency where oscillation occurs, or at 80% of the target speed. Refer to ***C5-01, C5-03 / C5-02, C5-04: ASR Proportional Gain 1, 2 / ASR Integral Time 1, 2 on page 173***.

■ C5-08: ASR Integral Limit

Sets the upper limit for ASR as a percentage of the rated load.

No.	Parameter Name	Setting Range	Default
C5-08	ASR Integral Limit	0 to 400%	400%

■ C5-12: Integral Operation during Accel/Decel (V/f w/PG)

Enables integral operation during acceleration and deceleration. Integral operation should be used when driving a heavy load or a high inertia load, but can cause problems with overshoot at the end of acceleration and deceleration. Refer to ***ASR Setup Problems and Corrective Actions on page 173*** to solve such problems.

No.	Parameter Name	Setting Range	Default
C5-12	Integral Operation during Accel/Decel	0, 1	0

上正科技有限公司
購買、維修 此手冊零組件
電話： 037-466333
Email: service@repairtw.com
Line id: @zzzz
www.repairtw.com

Setting 0: Disabled

Integral operation occurs only during constant speed and not during acceleration or deceleration.

Setting 1: Enabled

Integral operation is always enabled.

■ C5-17, C5-18: Motor Inertia, Load Inertia Ratio

C5-17 and C5-18 determine the ratio of the machine inertia and the inertia of the motor being used.

These parameters are set automatically when Inertia Tuning and ASR Tuning are performed in CLV and CLV/PM control modes. ***Refer to Auto-Tuning on page 109*** for details on Auto-Tuning or enter the data manually.

No.	Parameter Name	Setting Range	Default
C5-17	Motor Inertia	0.0001 to 600.00 kgm^2	Determined by C6-01, E5-01 and o2-04
C5-18	Load Inertia Ratio	0.0 to 6000.0	1.0

■ C5-21, C5-23 / C5-22, C5-24: Motor 2 ASR Proportional Gain 1, 2 / Integral Time 1, 2

These parameters function for motor 2 in the same way that C5-01 through C5-04 function for motor 1. For more details, see ***C5-01, C5-03 / C5-02, C5-04: ASR Proportional Gain 1, 2 / ASR Integral Time 1, 2 on page 173***.

No.	Parameter Name	Setting Range	Default
C5-21	Motor 2 ASR Proportional Gain 1	0.00 to 300.00	Determined by E3-01
C5-22	Motor 2 ASR Integral Time 1	0.000 to 10.000 s	Determined by E3-01
C5-23	Motor 2 ASR Proportional Gain 2	0.00 to 300.00	Determined by E3-01
C5-24	Motor 2 ASR Integral Time 2	0.000 to 10.000 s	Determined by E3-01

■ C5-25: Motor 2 ASR Limit

Functions for motor 2 in the same way that C5-05 functions for motor 1. Sets the ASR output limit for motor 2 as a percentage of the maximum output frequency (E4-04). For more details, see ***C5-05: ASR Limit on page 174***.

No.	Parameter Name	Setting Range	Default
C5-25	Motor 2 ASR Limit	0.0 to 20.0%	5.0%

■ C5-26: Motor 2 ASR Primary Delay Time Constant

Functions for motor 2 in the same way that C5-06 functions for motor 1.

Sets the filter time constant for the time from the speed loop to the torque command output. For more details, see ***C5-06: ASR Primary Delay Time Constant on page 174***.

Note: This parameter rarely requires adjustment.

No.	Parameter Name	Setting Range	Default
C5-26	Motor 2 ASR Primary Delay Time Constant	0.000 to 0.500 s	0.004 s

■ C5-27: Motor 2 ASR Gain Switching Frequency

Functions for motor 2 in the same way that C5-07 functions for motor 1.

Sets the frequency for motor 2 to change ASR proportional gain 1 and 2 (C5-21, C5-23) as well as the integral time 1 and 2 (C5-22, C5-24). For more details, see ***C5-01, C5-03 / C5-02, C5-04: ASR Proportional Gain 1, 2 / ASR Integral Time 1, 2 on page 173***.

No.	Parameter Name	Setting Range	Default
C5-27	Motor 2 ASR Gain Switching Frequency	0.0 to 400.0 Hz	0.0 Hz

Note: A multi-function input set for the ASR gain switch (H1-□□ = 77) takes priority over the ASR gain switching frequency.

正科技有限公司
購買、維修 此手冊零組件
電話： 037-466333
Email: service@repairtw.com
Line id: @zzzz
www.repairtw.com

■ C5-28: Motor 2 ASR Integral Limit

Functions for motor 2 in the same way that C5-08 functions for motor 1.

Sets the upper limit for ASR as a percentage of the rated load. For more details, see ***C5-08: ASR Integral Limit on page 175***.

No.	Parameter Name	Setting Range	Default
C5-28	Motor 2 ASR Integral Limit	0 to 400%	400%

■ C5-32: Integral Operation during Accel/Decel for Motor 2

Functions for motor 2 in the same way that C5-12 functions for motor 1.

Enables integral operation during acceleration and deceleration. For more details, see ***C5-12: Integral Operation during Accel/Decel (V/f w/PG) on page 175***.

No.	Parameter Name	Setting Range	Default
C5-32	Integral Operation during Accel/Decel for Motor 2	0, 1	0

Setting 0: Disabled

Integral operation occurs only during constant speed and not during acceleration or deceleration.

Setting 1: Enabled

Integral operation is always enabled.

■ C5-37, C5-38: Motor 2 Inertia, Motor 2 Load Inertia Ratio

These parameters function for motor 2 in the same way that C5-17 and C5-18 function for motor 1.

These parameters are set automatically when Inertia Tuning and ASR Tuning are performed for motor 2 in CLV and CLV/PM control modes. *Refer to Auto-Tuning on page 109* for details on Auto-Tuning or enter the data manually.

No.	Parameter Name	Setting Range	Default
C5-37	Motor 2 Inertia	0.0001 to 600.00 kgm^2	Determined by C6-01 and o2-04
C5-38	Motor 2 Load Inertia Ratio	0.0 to 6000.0	1.0

◆ C6: Carrier Frequency

■ C6-01: Drive Duty Mode Selection

The drive has two different “duty modes” to select from based on the load characteristics. The drive rated current, overload capacity, and maximum output frequency will change depending upon the duty mode selection. Use parameter C6-01 to select Heavy Duty (HD) or Normal Duty (ND) for the application. The default setting is ND. Refer to *Heavy Duty and Normal Duty Ratings on page 388* for details about the rated current.

No.	Parameter Name	Setting Range	Default
C6-01	Duty Mode Selection	0 or 1	0 (HD)

Table 5.15 Differences between Heavy and Normal Duty

Characteristics	Heavy Duty Rating (HD)	Normal Duty Rating (ND)
C6-01	0	1
Performance	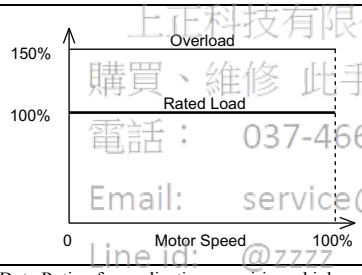	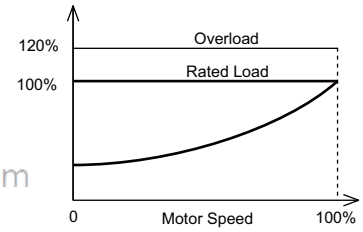
Application	Use Heavy Duty Rating for applications requiring a high overload tolerance with constant load torque. Such applications include extruders and conveyors.	Use Normal Duty Rating for applications in which the torque requirements drop along with the speed. Examples include fans and pumps where a high overload tolerance is not required.
Over load capability (oL2)	150% of drive rated Heavy Duty current for 60 s	120% of drive rated Normal Duty current for 60 s
Stall Prevention during Acceleration (L3-02)	150%	120%
Stall Prevention during Run (L3-06)	150%	120%
Default Carrier Frequency	2 kHz	2 kHz Swing PWM

上正科技有限公司
購買、維修 此手冊零組件
電話： 037-466333
Email: service@repairtw.com
Line id: @zzzz
www.repairtw.com

Note: By changing the Duty Mode selection, the maximum size motor the drive can run changes, and the E2-☐☐ parameters are automatically set to appropriate values (E4-☐☐ for motor 2). Parameters settings determined by motor capacity are recalculated automatically when the Duty Mode selection is changed. This includes b8-04, L2-03, n5-02, L3-24, C5-17, and C5-37.

■ C6-02: Carrier Frequency Selection

Parameter C6-02 sets the switching frequency of the drive’s output transistors. Changes to the switching frequency helps lower audible noise and also reduces leakage current.

Note: Increasing the carrier frequency above the default value automatically lowers the drive’s current rating. *Refer to Rated Current Depending on Carrier Frequency on page 179*.

No.	Parameter Name	Setting Range	Default
C6-02	Carrier Frequency Selection	1 to F	Determined by A1-02, o2-04. Reset when C6-01 is changed.

Note: The default setting for the carrier frequency differs based on the type of motor and the Duty Mode selection. The default is 2 kHz when the drive is set for Heavy Duty performance, and defaulted to “Swing PWM1” when set for Normal Duty performance. When using a PM motor, the default carrier frequency is 5.0 Hz.

Settings:

C6-02	Carrier Frequency	C6-02	Carrier Frequency	C6-02	Carrier Frequency
1	2.0 kHz	5	12.5 kHz (10.0 kHz)	9	Swing PWM 3
2	5.0 kHz (4.0 kHz)	6	15.0 kHz (12.0 kHz)	A	Swing PWM 4
3	8.0 kHz (6.0 kHz)	7	Swing PWM 1	F	User defined (C6-03 to C6-05)
4	10.0 kHz (8.0 kHz)	8	Swing PWM 2		

Note: **1.** Swing PWM uses a carrier frequency of 2.0 kHz as a base, then applies a special PWM pattern to reduce the audible noise.
2. The value in parenthesis indicates the carrier frequency for AOLV/PM.

Guidelines for Carrier Frequency Parameter Setup

Symptom	Remedy
Speed and torque are unstable at low speeds	Lower the carrier frequency.
Noise from the drive affects peripheral devices	
Excessive leakage current from the drive	
Wiring between the drive and motor is too long <1>	
Audible motor noise is too loud	Increase the carrier frequency or use Swing PWM. <2>

<1> The carrier frequency may need to be lowered if the motor cable is too long. Refer to the table below.
<2> In Normal Duty, the carrier frequency default is for Swing PWM (C6-02 = 7), the same as setting 2 kHz. Increasing the carrier frequency is fine when the drive is set for Normal Duty, but remember that the drive rated current falls when the carrier frequency is increased.

Wiring Distance	Up to 50 m	Up to 100 m	Greater than 100 m
Recommended setting value for C6-02	1 to F (up to 15 kHz)	1 to 2 (up to 5 kHz), 7 (Swing PWM)	1 (up to 2 kHz), 7 (Swing PWM)

■ C6-03, C6-04, C6-05: Carrier Frequency Upper Limit, Lower Limit, Proportional Gain

Use these parameters to set a user defined or a variable carrier frequency. To set the upper and lower limits and the carrier frequency proportional gain, first set C6-02 to F.

正科技有限公司
購買、維修 此手冊零組件
電話：037-466333
Email：service@repairtw.com
@zzzz
www.repairtw.com

No.	Parameter Name	Setting Range	Default
C6-03	Carrier Frequency Upper Limit	1.0 to 15.0 kHz	Determined by C6-02
C6-04	Carrier Frequency Lower Limit (V/f Control only)	1.0 to 15.0 kHz	
C6-05	Carrier Frequency Proportional Gain (V/f Control only)	0 to 99	

Setting a Fixed User Defined Carrier Frequency

A carrier frequency between the fixed selectable values can be entered in parameter C6-03 when C6-02 is set to F. In V/f Control, parameter C6-04 must also be adjusted to the same value as C6-03.

Setting a Variable Carrier Frequency (V/f Control)

In V/f Control, the carrier frequency can be set up to change linearly with the output frequency. To do this, set the upper and lower limits for the carrier frequency and the carrier frequency proportional gain (C6-03, C6-04, C6-05) as shown in *Figure 5.40*.

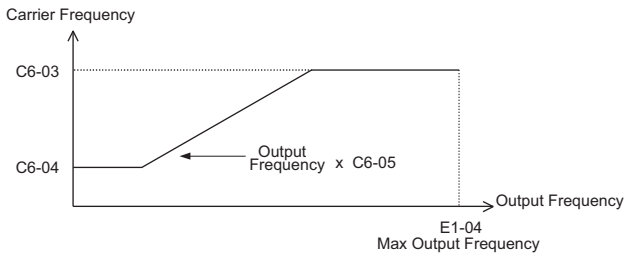

Figure 5.40 Carrier Frequency Changes Relative to Output Frequency

Note: **1.** C6-03 takes priority when the carrier frequency proportional gain C6-05 > 27 and C6-03 < C6-04.
2. When C6-05 is set lower than 7, C6-04 is disabled and the carrier frequency will be fixed to the value set in C6-03.

■ C6-09: Carrier Frequency during Rotational Auto-Tuning

C6-09 determines what the carrier frequency should be while Rotational Auto-Tuning is performed.

This parameter rarely requires adjustment, but can be helpful solving problems with overcurrent when Auto-Tuning a high frequency motor or a low impedance motor. In such cases, first set C6-03 to high value, then set C6-09 = 1.

No.	Parameter Name	Setting Range	Default
C6-09	Carrier Frequency during Rotational Auto-Tuning	0, 1	0

Setting 0: 5 kHz
Setting 1: Same value set to C6-03

■ Rated Current Depending on Carrier Frequency

The tables below show the drive output current depending on the carrier frequency settings.

The 2 kHz value is equal to the Normal Duty rated current. If the carrier frequency is increased above 2 kHz in ND, the rated output current is reduced.

The 8 kHz and 5 kHz values are equal to the Heavy Duty rated current. They define the value up to which the carrier frequency can be increased in HD without a current derating (default HD carrier frequency is 2 kHz). Increasing the carrier frequency above 8 kHz or 5 kHz reduces the rated output current.

Use the data in *Table 5.16* to linearly calculate output current values for carrier frequencies not listed in the tables.

Table 5.16 Carrier Frequency and Current Derating

Three-Phase 200 V Class							Three-Phase 400 V Class						
Model CIMR-A□	Rated Current (A)						Model CIMR-A□	Rated Current (A)					
	Heavy Duty Rating (HD)			Normal Duty Rating (ND)				Heavy Duty Rating (HD)			Normal Duty Rating (ND)		
	2 kHz	8 kHz	15 kHz	2 kHz	8 kHz	15 kHz		2 kHz	8 kHz	15 kHz	2 kHz	8 kHz	15 kHz
2A0004	3.2	3.2	2.56	3.5	3.2	2.56	4A0002	1.8	1.8	1.1	2.1	1.8	1.1
2A0006	5	5	4	6	5	4	4A0004	3.4	3.4	2	4.1	3.4	2
2A0010	8	8	6.4	9.6	8	6.4	4A0005	4.8	4.8	2.9	5.4	4.8	2.9
2A0012	11	11	8.8	12	11	8.8	4A0007	5.5	5.5	3.3	6.9	5.5	3.3
2A0021	17.5	17.5	14	21	17.5	14	4A0009	7.2	7.2	4.3	8.8	7.2	4.3
2A0030	25	25	20	30	25	20	4A0011	9.2	9.2	5.5	11.1	9.2	5.5
2A0040	33	33	26.4	40	33	26.4	4A0018	14.8	14.8	8.9	17.5	14.8	8.9
2A0056	47	47	37.6	56	47	37.6	4A0023	18	18	10.8	23	18	10.8
2A0069	60	60	48	69	60	48	4A0031	24	24	14.4	31	24	14.4
2A0081	75	75	53	81	75	53	4A0038	31	31	18.6	38	31	18.6
2A0110	85	85	60	110	85	60	4A0044	39	39	23.4	44	39	23.4
2A0138	115	115	81	138	115	81	4A0058	45	45	27	58	45	27
							4A0072	60	60	36	72	60	36
							4A0088	75	75	45	88	75	45
							4A0103	91	91	55	103	91	55

Three-Phase 200 V Class							Three-Phase 400 V Class						
Model CIMR-A□	Rated Current (A)						Model CIMR-A□	Rated Current (A)					
	Heavy Duty Rating (HD)			Normal Duty Rating (ND)				Heavy Duty Rating (HD)			Normal Duty Rating (ND)		
	2 kHz	5 kHz	10 kHz	2 kHz	5 kHz	10 kHz		2 kHz	5 kHz	10 kHz	2 kHz	5 kHz	10 kHz
2A0169	145	145	116	169	145	116	4A0139	112	112	78	139	112	78
2A0211	180	180	144	211	180	144	4A0165	150	150	105	165	150	105
2A0250	215	215	172	250	215	172	4A0208	180	180	126	208	180	126
2A0312	283	283	226	312	283	226	4A0250	216	216	151	250	216	151
2A0360	346	346	277	360	346	277	4A0296	160	260	182	296	260	182
2A0415	415	415	332	415	415	332	4A0362	304	304	213	362	304	213
							4A0414	370	370	–	414	370	–
							4A0515	450	375	–	515	397	–
							4A0675	605	504	–	675	528	–

上正科技有限公司 維修報價 手冊零組件 電話 037-463343 email: service@repairtw.com line id: @zzzz www.repairtw.com

5.4 d: Reference Settings

The figure below gives an overview of the reference input, selections, and priorities.

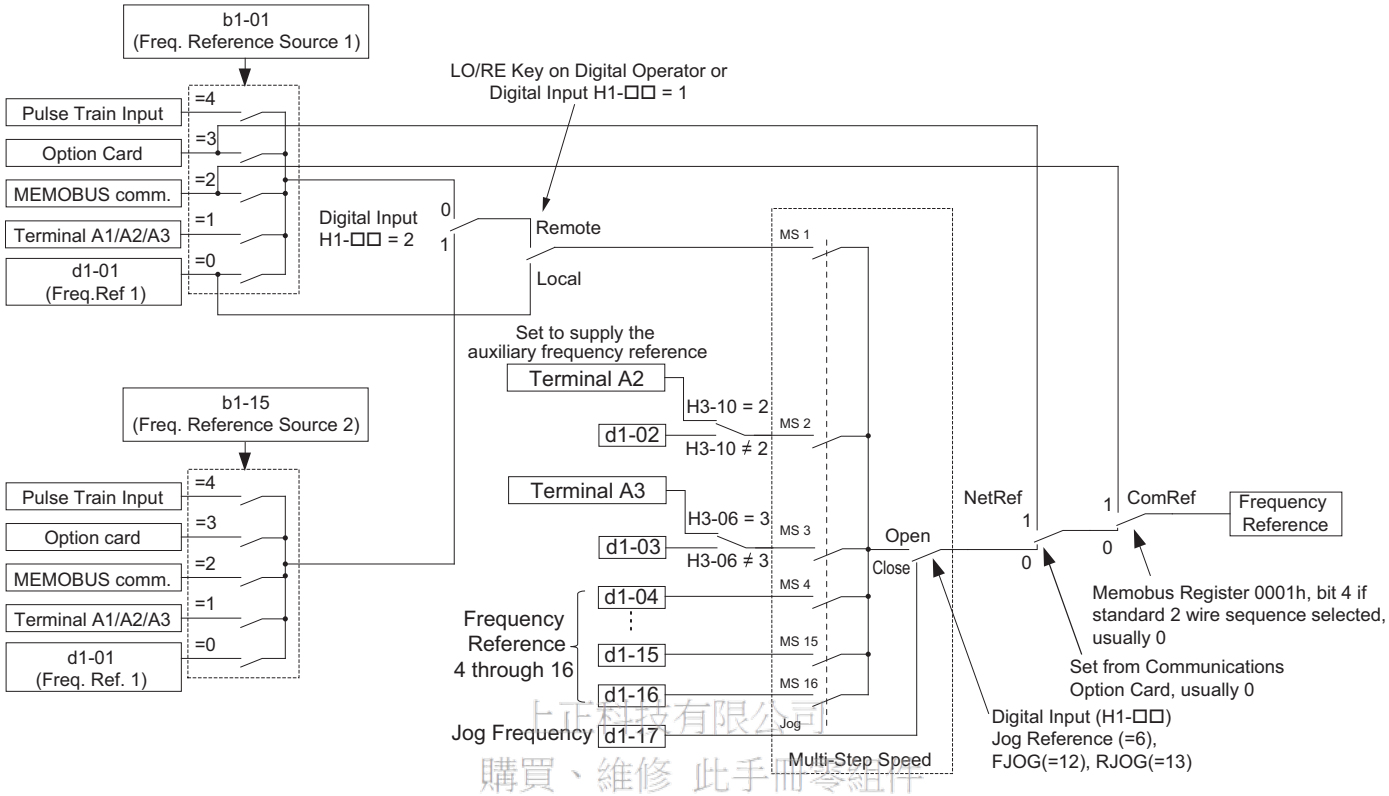

Figure 5.41 Frequency Reference Setting Hierarchy

上正科技有限公司
購買、維修 此手冊零組件
電話： 037-466333
Email: service@repairtw.com
Line Id: @zzzz
www.repairtw.com

◆ d1: Frequency Reference

■ d1-01 to d1-17: Frequency Reference 1 to 16 and Jog Frequency Reference

Up to 17 preset frequency references (including the Jog reference) can be programmed in the drive. The drive lets the user switch between these frequency references during run by using the digital input terminals. The drive uses the acceleration and deceleration times that have been selected when switching between each frequency reference.

The Jog frequency must be selected by a separate digital input and overrides all other frequency references.

The multi-speed references 1, 2, and 3 can be provided by analog inputs.

No.	Parameter Name	Setting Range	Default
d1-01 to d1-16	Frequency Reference 1 to 16	0.00 to 400.00 Hz <1> <2>	0.00 Hz <2>
d1-17	Jog Frequency Reference	0.00 to 400.00 Hz <1> <2>	6.00 Hz <2>

<1> The upper limit is determined by the maximum output frequency (E1-04) and upper limit for the frequency reference (d2-01).
<2> Setting units are determined by parameter o1-03. The default is “Hz” (o1-03 = 0) in V/f, V/f w/PG, OLV, CLV, and OLV/PM control modes. The default for AOLV/PM and CLV/PM control modes expresses the frequency reference as a percentage (o1-03 = 1).

Multi-Step Speed Selection

To use several speed references for a multi-step speed sequence, set the H1-□□ parameters to 3, 4, 5, and 32. To assign the Jog reference to a digital input, set H1-□□ to 6.

Notes on using analog inputs as Multi-Speed 1, 2, and 3:

- The first frequency reference (Multi-Speed 1) comes from the source specified in b1-01. When using an analog input terminal to supply the frequency reference, the frequency reference source must be assigned to the control terminals (b1-01 = 1).
- When an analog input is set to “Auxiliary frequency 1” (H3-02, H2-06, or H2-10 = 2), then the value set to this input will be used as the Multi-Step Speed 2 instead of the value set to parameter d1-02. If no analog inputs are set for “Auxiliary frequency 1”, then d1-02 becomes the reference for Multi-Step Speed 2.

- When the an analog input is set to “Auxiliary frequency 2” (H3-02, H2-06, or H2-10 = 3), then the value set to this input will be used as the Multi-Step Speed 3 instead of the value set to parameter d1-03. If no analog inputs are set for “Auxiliary frequency 2”, then d1-03 becomes the reference for Multi-Step Speed 3.

The different speed references can be selected as shown in ***Table 5.17***. ***Figure 5.42*** illustrates the multi-step speed selection.

Table 5.17 Multi-Step Speed Reference and Terminal Switch Combinations

Reference	Multi-Step Speed H1-□□=3	Multi-Step Speed 2 H1-□□=4	Multi-Step Speed 3 H1-□□=5	Multi-Step Speed 4 H1-□□=32	Jog Reference H1-□□=6
Frequency Reference 1 (set in b1-01)	OFF	OFF	OFF	OFF	OFF
Frequency Reference 2 (d1-02 or input terminal A1, A2, A3)	ON	OFF	OFF	OFF	OFF
Frequency Reference 3 (d1-03 or input terminal A1, A2, A3)	OFF	ON	OFF	OFF	OFF
Frequency Reference 4 (d1-04)	ON	ON	OFF	OFF	OFF
Frequency Reference 5 (d1-05)	OFF	OFF	ON	OFF	OFF
Frequency Reference 6 (d1-06)	ON	OFF	ON	OFF	OFF
Frequency Reference 7 (d1-07)	OFF	ON	ON	OFF	OFF
Frequency Reference 8 (d1-08)	ON	ON	ON	OFF	OFF
Frequency Reference 9 (d1-09)	OFF	OFF	OFF	ON	OFF
Frequency Reference 10 (d1-10)	ON	OFF	OFF	ON	OFF
Frequency Reference 11 (d1-11)	OFF	ON	OFF	ON	OFF
Frequency Reference 12 (d1-12)	ON	ON	OFF	ON	OFF
Frequency Reference 13 (d1-13)	OFF	OFF	ON	ON	OFF
Frequency Reference 14 (d1-14)	ON	OFF	ON	ON	OFF
Frequency Reference 15 (d1-15)	OFF	ON	ON	ON	OFF
Frequency Reference 16 (d1-16)	ON	ON	ON	ON	OFF
Jog Frequency Reference (d1-17) <1>	–	–	–	–	ON

<1> The Jog frequency overrides whatever frequency reference is being used.

上正科技有限公司
購買、維修 此手冊零組件
電話： 037-466333
Email: service@repairtw.com
Line id: @zzzz
www.repairtw.com

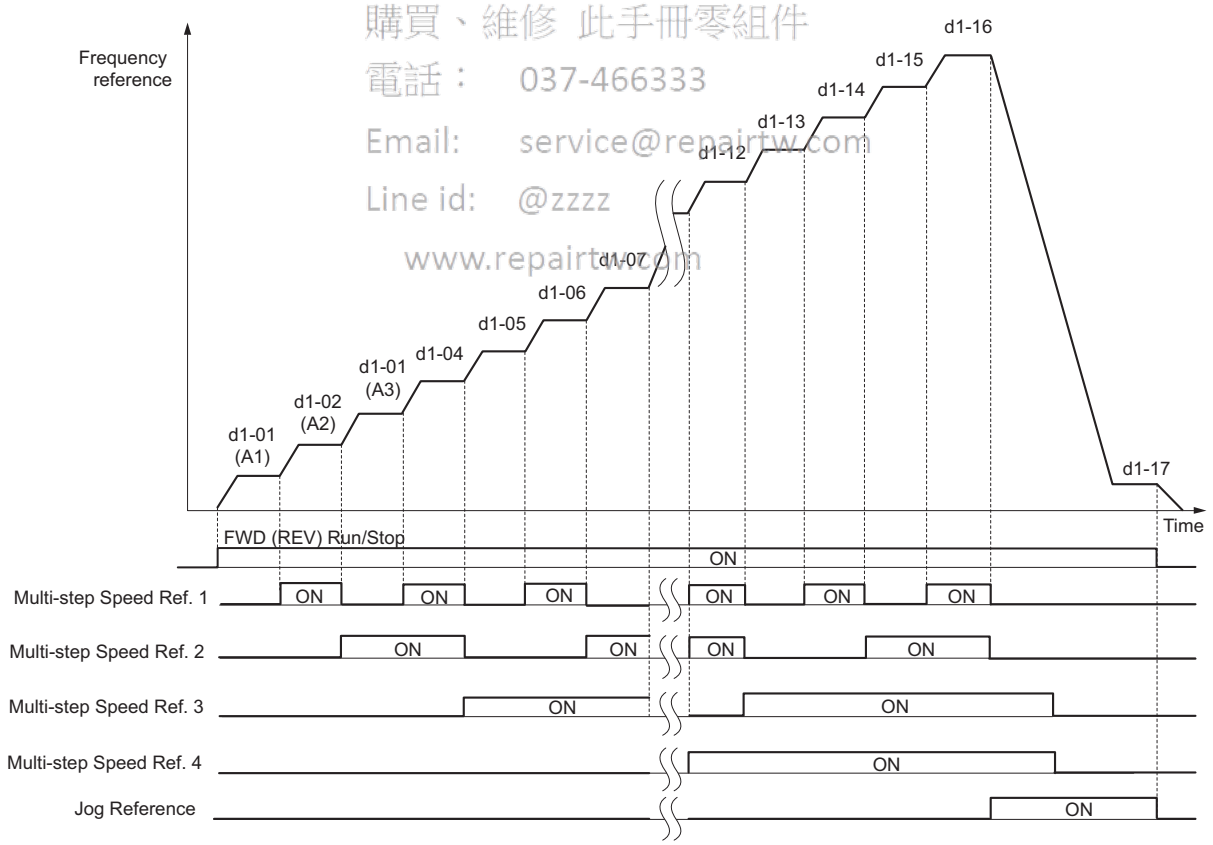

Figure 5.42 Preset Reference Timing Diagram

◆ d2: Frequency Upper/Lower Limits

By entering upper or lower frequency limits, the user can keep motor speed from going above or below levels that may cause resonance or equipment damage.

■ d2-01: Frequency Reference Upper Limit

Sets the maximum frequency reference as a percentage of the maximum output frequency. This limit applies to all frequency references.

Even if the frequency reference is set to a higher value, the drive internal frequency reference will not exceed this value.

No.	Parameter Name	Setting Range	Default
d2-01	Frequency Reference Upper Limit	0.0 to 110.0%	100.0%

■ d2-02: Frequency Reference Lower Limit

Sets the minimum frequency reference as a percentage of the maximum output frequency. This limit applies to all frequency references.

If a lower reference than this value is entered, the drive will run at the limit set to d2-02. If the drive is started with a lower reference than d2-02, it will accelerate up to d2-02.

No.	Parameter Name	Setting Range	Default
d2-02	Frequency Reference Lower Limit	0.0 to 110.0%	0.0%

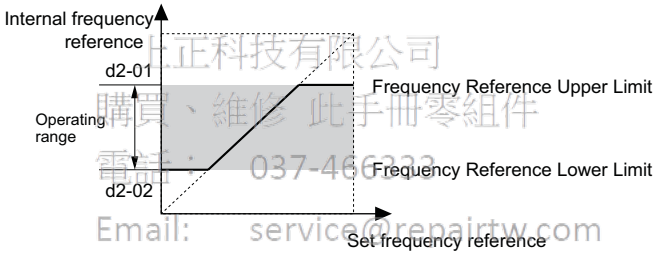

上正科技有限公司
購買、維修 此手冊零組件
電話： 037-466233
Email: service@repairtw.com
Line Id: @2222
www.repairtw.com

Figure 5.43 Frequency Reference: Upper and Lower Limits

■ d2-03: Master Speed Reference Lower Limit

Unlike frequency reference lower limit (d2-02) that affects the all frequency references wherever they are sourced from (i.e., analog input, preset speed, Jog speed, etc.), the master speed lower limit (d2-03) sets a lower limit that will only affect a frequency reference entered from the analog input terminals (A1, A2, or A3).

Set as a percentage of the maximum output frequency.

Note: When lower limits are set to both parameters d2-02 and d2-03, the drive uses the greater of those two values as the lower limit.

No.	Parameter Name	Setting Range	Default
d2-03	Master Speed Reference Lower Limit	0.0 to 110.0%	0.0%

◆ d3: Jump Frequency

■ d3-01 to d3-04: Jump Frequencies 1, 2, 3 and Jump Frequency Width

To avoid operating at a speed that causes resonance in driven machinery, the drive can be programmed with three separate Jump frequencies. The Jump frequencies are frequency ranges that the drive will not operate at. If the speed reference falls within a Jump frequency dead band, the drive will clamp the frequency reference just below the dead band and only accelerate past it when the frequency reference rises above the upper end of the dead band.

Setting parameters d3-01 through d3-03 to 0.0 Hz disables the Jump frequency function.

No.	Parameter Name	Setting Range	Default
d3-01	Jump Frequency 1	0.0 to 400.0 Hz <I>	0.0 Hz <I>
d3-02	Jump Frequency 2	0.0 to 400.0 Hz <I>	0.0 Hz <I>
d3-03	Jump Frequency 3	0.0 to 400.0 Hz <I>	0.0 Hz <I>

No.	Parameter Name	Setting Range	Default
d3-04	Jump Frequency Width	0.0 to 20.0 Hz <1>	1.0 Hz <1>

<1> In AOLV/PM and CLV/PM control modes, the setting units and range are expressed as a percent instead of in Hz.

Figure 5.44 shows the relationship between the Jump frequency and the output frequency.

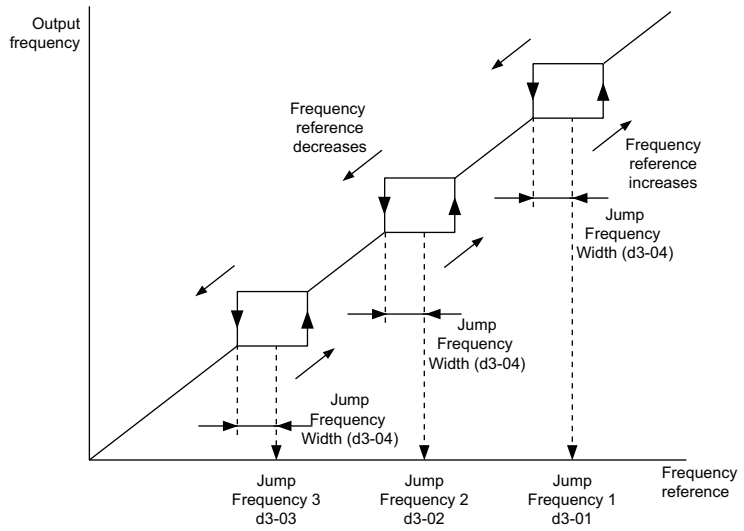

Figure 5.44 Jump Frequency Operation

Note: **1.** The drive will use the active accel/decel time to pass through the specified dead band range, but will not allow continuous operation in that range.

2. When setting more than one Jump frequency, make sure that d3-01 ≥ d3-02 ≥ d3-03.

上正科技有限公司
購買、維修 此手冊零組件
電話： 037-466333
Email: service@repairtw.com
Line id: @zzzz
www.repairtw.com

◆ d4: Frequency Reference Hold and Up/Down 2 Function

■ d4-01: Frequency Reference Hold Function Selection

This parameter is effective when either of the digital input functions listed below is used.

- Accel/decel ramp hold function (H1-□□= A)
- Up/Down function (H1-□□ = 10 and 11)
- Up/Down 2 function (H1-□□ = 75 and 76)

Parameter d4-01 determines whether the frequency reference or the frequency bias (Up/Down 2) value is saved when the Stop command is entered or the power supply is shut down.

No.	Parameter Name	Setting Range	Default
d4-01	Frequency Reference Hold Function Selection	0 or 1	0

The operation depends on the function used with parameter d4-01.

Setting 0: Disabled

- Acceleration hold

  The hold value will be reset to 0 Hz when the Stop command is entered or the drive power is switched off. The active frequency reference will be the value the drive uses when it restarts.
- Up/Down

  The frequency reference value will be reset to 0 Hz when the Stop command is entered or the drive power is switched off. The drive will start from 0 Hz when it is turned back on again.
- Up/Down 2

  The frequency bias is not saved when the Stop command is entered, or 5 s after the Up/Down 2 command has been released. The Up/Down 2 function will start with a bias of 0% when the drive is restarted.

Setting 1: Enabled

- Acceleration hold

  The last hold value will be saved when the Run command or the drive power is switched off. The drive will use the value that was saved as the frequency reference when it restarts. The multi-function input terminal set for “Accel/decel

ramp hold" (H1-☐☐ = A) must be enabled the entire time, or else the hold value will be cleared when the power is switched on.

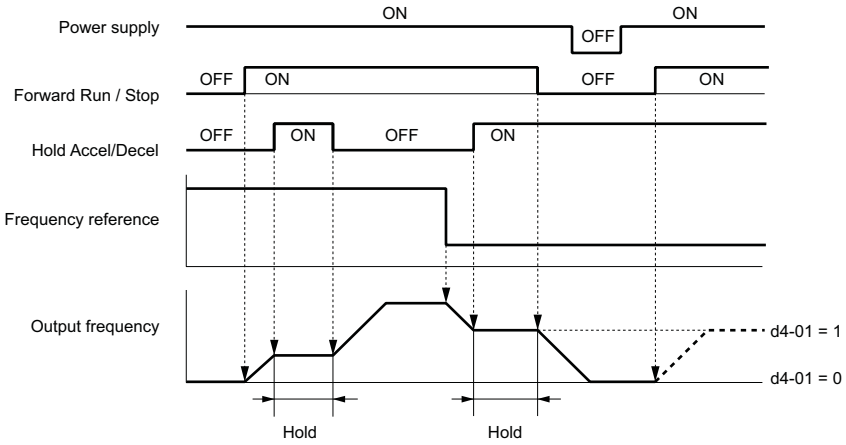

Figure 5.45 Frequency Reference Hold with Accel/Decel Hold Function

- Up/Down
  The frequency reference value will be saved when the Run command or the drive power is switched off. The drive will use the frequency reference that was saved when it restarts.
- Up/Down 2 with frequency reference from digital operator
  When a Run command is active and the Up/Down 2 command is released for longer than 5 s, the Up/Down 2 bias value is added to the frequency reference and then reset to 0. This new frequency reference is saved and will also be used to restart the drive after the power is cycled.

上正科技有限公司
購買、維修 此手冊零組件
電話： 037-466333
Email: service@repairtw.com
Line id: @zzzz
www.repairtw.com

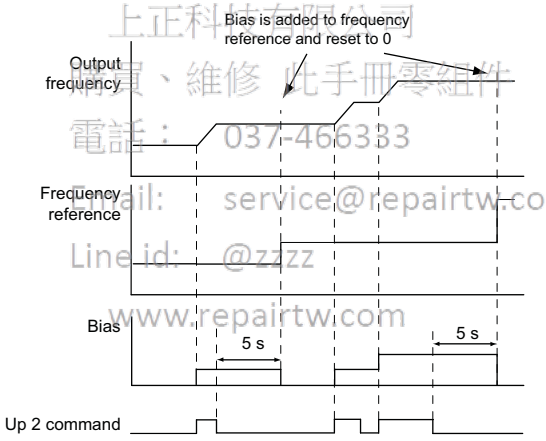

Figure 5.46 Up/Down 2 Example with Reference from Digital Operator and d4-01 = 1

- Up/Down 2 with frequency reference from input sources other than the digital operator
  When a Run command is active and the Up/Down 2 command is released for longer than 5 s, the bias value will be saved in parameter d4-06. When restarting after the power is switched off, the drive will add the value saved in d4-06 as a bias to the frequency reference.

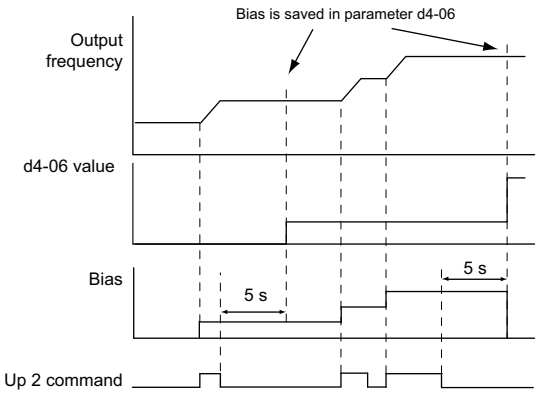

Figure 5.47 Up/Down 2 Example with Other Reference than Digital Operator and d4-01 = 1

Note: Make sure to set the limits for Up/Down 2 properly when using d4-01 = 1 in combination with the Up/Down 2 function. *Refer to*

d4-08: Frequency Reference Bias Upper Limit (Up/Down 2) on page 187 and *Refer to d4-09: Frequency Reference Bias Lower Limit (Up/Down 2) on page 187* for details on the limit settings.

Clearing the Value that was Saved

Depending on which function is used, the frequency reference value that was saved can be cleared by:

- Releasing the input programmed for Acceleration hold.
- Setting an Up or Down command while no Run command is active.
- Parameter d4-06 is reset to zero. Refer to *d4-06: Frequency Reference Bias (Up/Down 2) on page 186* for details.

■ d4-03: Frequency Reference Bias Step (Up/Down 2)

Sets the bias that is added to or subtracted from the frequency reference by the Up/Down 2 function.

No.	Parameter Name	Setting Range	Default
d4-03	Frequency Reference Bias Step (Up/Down 2)	0.00 to 99.99 Hz	0.00 Hz

The operation depends on the set value:

Setting d4-03 = 0.0 Hz

While the Up 2 or Down 2 command is enabled, the bias value is increased or decreased using the accel/decel time determined by parameter d4-04.

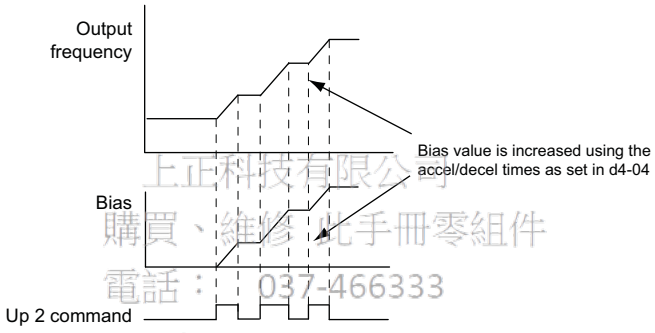

上正科技有限公司
購買、維修此手冊零組件
電話： 037-466333
Email: service@repairtw.com
Line id: @zzzz
www.repairtw.com

Figure 5.48 Up/Down 2 Bias when d4-03 = 0.0 Hz

Setting d4-03 ≠ 0.0 Hz

When an Up 2 or Down 2 command is enabled, the bias is increased or decreased in steps for the value set in d4-03. The frequency reference changes with the accel/decel times determined by parameter d4-04.

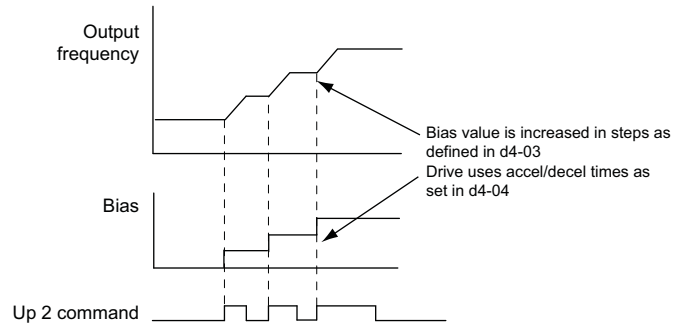

Figure 5.49 Up/Down 2 Bias when d4-03 > 0.0 Hz

■ d4-04: Frequency Reference Bias Accel/Decel (Up/Down 2)

Parameter d4-04 determines the accel/decel times that are used for increasing/decreasing the frequency reference or bias when the Up/Down 2 function is used.

No.	Parameter Name	Setting Range	Default
d4-04	Frequency Reference Bias Accel/Decel (Up/Down 2)	0 or 1	0

Setting 0: Current Accel/Decel Time

The drive uses the currently active accel/decel time.

Setting 1: Accel/Decel Time 4

The drive uses accel/decel time 4 set to parameters C1-07 and C1-08.

■ d4-05: Frequency Reference Bias Operation Mode Selection (Up/Down 2)

Determines if the bias value is held or not when the Up/Down 2 inputs are both released or both enabled. The parameter is effective only when parameter d4-03 is set to 0.00.

No.	Parameter Name	Setting Range	Default
d4-05	Frequency Reference Bias Operation Mode Selection (Up/Down 2)	0 or 1	0

Setting 0: Hold Bias Value

The bias value will be held if no input Up 2 or Down 2 is active.

Setting 1: Reset Bias Value

The bias is reset to 0% when both inputs Up 2 and Down 2 are either on or off. The drive will use the accel/decel time as selected in d4-04 to accelerate or decelerate to the frequency reference value.

■ d4-06: Frequency Reference Bias (Up/Down 2)

This parameter is used to save the frequency reference bias value set by the Up/Down 2 function. It is set as a percentage of the maximum output frequency. The function of d4-06 depends on how the Up/Down 2 function is configured.

- This parameter is normally not used when the frequency reference is set by the digital operator. The user can set d4-06 to a certain value that will be applied during run, but this value will be reset when the frequency reference changes (including multi-step references) or will be disabled when d4-01 = 0 and the Run command is removed.
- When d4-01 = 0 and the frequency reference is set by a source other than the digital operator, the value set in d4-06 is generally added to or subtracted from the frequency reference.
- When d4-01 = 1 and the frequency reference is set by a source other than the digital operator, the bias value adjusted with the Up/Down 2 inputs is stored in d4-06 once 5 s have passed after the Up 2 or Down 2 command is released. The frequency reference will then return to what it was without the Up/Down 2 command.

上正科技有限公司
維修、維修 IC 手冊參詢店
電話：03-7468033
service@repairtw.com
line id: @zzzz
www.repairtw.com

No.	Parameter Name	Setting Range	Default
d4-06	Frequency Reference Bias (Up/Down 2)	-99.9 to 100.0%	0.0%

Conditions that Generally Reset or Disable Parameter d4-06

- When the Up/Down 2 function has not been assigned to the multi-function terminals
- When the frequency reference source has been changed (including LOCAL/REMOTE or External reference 1/2 switch over by digital inputs)
- If d4-03 = 0 Hz, d4-05 = 1 and the Up/Down 2 commands are both open or both closed
- Any changes to the maximum frequency set to E1-04

■ d4-07: Analog Frequency Reference Fluctuation Limit (Up/Down 2)

This parameter is for handling changes in the frequency reference while the terminal set for Up 2 or Down 2 is enabled. If the frequency reference changes for more than the level set to d4-07, then the bias value will be held, and the drive will accelerate or decelerate following the frequency reference. When the frequency reference is reached, the bias hold is released and the bias follows the Up/Down 2 input commands.

Parameter d4-07 is applicable only if the frequency reference is set by an analog or pulse input.

No.	Parameter Name	Setting Range	Default
d4-07	Analog Frequency Reference Fluctuation Limit (Up/Down 2)	0.1 to 100.0%	1.0%

■ d4-08: Frequency Reference Bias Upper Limit (Up/Down 2)

Parameter d4-08 sets the upper limit of the Up/Down 2 bias (monitor U6-20) and the value that can be saved in parameter d4-06. Set this parameter to an appropriate value before using the Up/Down 2 function.

Note: When the frequency reference is set by the digital operator (b1-01 = 0) and d4-01 = 1, the bias value will be added to the frequency reference if no Up/Down 2 command is received for 5 s, and will be reset to 0 afterwards. From that point, the bias can be increased up to the limit set in d4-08 again.

No.	Parameter Name	Setting Range	Default
d4-08	Frequency Reference Bias Upper Limit (Up/Down 2)	0.0 to 100.0%	100.0%

■ d4-09: Frequency Reference Bias Lower Limit (Up/Down 2)

Parameter d4-09 sets the lower limit of the Up/Down 2 bias (monitor U6-20) and the value that can be saved in parameter d4-06. Set this parameter to an appropriate value before using the Up/Down 2 function.

Note: When the frequency reference is set by the digital operator (b1-01 = 0) and d4-01 = 1, the bias value will be added to the frequency reference if no Up/Down 2 command is received for 5 s, and will be reset to 0 afterwards. If the bias is increased using the Up 2 command, it cannot be reduced with a Down 2 command when the limit set in d4-09 is 0. To allow speed reduction in this situation, set a negative lower limit in d4-09.

No.	Parameter Name	Setting Range	Default
d4-09	Frequency Reference Bias Lower Limit (Up/Down 2)	-99.9 to 0.0%	0.0%

■ d4-10: Up/Down Frequency Reference Limit Selection

Selects how the lower frequency limit is set when the Up/Down function is used. Refer to ***Setting 10, 11: Up, Down command on page 217*** for details on the Up/Down function in combination with frequency reference limits.

上正科技有限公司
購買、維修 此手冊零組件
電話： 037-466333
Email: service@repairtw.com
Line id: @zzzz
www.repairtw.com

No.	Parameter Name	Setting Range	Default
d4-10	Up/Down Frequency Reference Limit Selection	0 or 1	0

Setting 0: Lower Limit is Determined by d2-02 or Analog Input

The lower frequency reference limit is determined by the higher value of either parameter d2-02 or an analog input (A1, A2, A3) that is programmed for “Frequency bias”.

Note: For example, if the command to switch the external reference (H1-□□ = 2) is used to switch between the Up/Down function and an analog input as the reference source, then the analog value would become the lower reference limit when the Up/Down command is active. Change d4-10 to 1 to make the Up/Down function independent of the analog input value.

Setting 1: Lower Limit is Determined by Parameter d2-02

Only parameter d2-02 sets the lower frequency reference limit.

■ d4-11: Bi-Directional Output Selection

Selects if the frequency reference or PID output value is converted into bi-directional internal frequency reference. Refer also to the PID block diagram in ***Figure 5.23*** to see how bi-directional output works.

Note: When used in combination with PID control, the bi-directional output function can be enabled or disabled using a digital input (H1-□□ = 7F)

No.	Parameter Name	Setting Range	Default
d4-11	Bi-Directional Output Selection	0 or 1	0

Setting 0: No Conversion

The frequency reference or PID output value is used as it is without being converted. The drive will operate in the direction selected from 0 to 100% of the maximum output frequency.

Setting 1: Bi-Directional Output Conversion

When the frequency reference or PID output is below 50%, the drive reverses the selected direction. When it is above 50% the drive works in the selected direction.

■ d4-12: Stop Position Gain

Sets the gain for adjusting the stopping accuracy when simple positioning is selected as the stopping method (b1-03 = 9).

No.	Parameter Name	Setting Range	Default
d4-12	Stop Position Gain	0.50 to 2.55	1.00

Increase the value if the motor stops before the desired stop position is reached. Decrease it if the motor stops too late. Also refer to *b1-03: Stopping Method Selection on page 138* for details on simple positioning.

◆ d5: Torque Control

Torque Control is available for CLV and CLV/PM (A1-02 = 3, 7). It allows to define a setpoint for the torque produced by the motor.

■ Torque Control Operation

Torque control can be enabled either by setting parameter d5-01 to 1 or by a digital input (H1-☐☐ = 71). *Figure 5.50* illustrates the working principle.

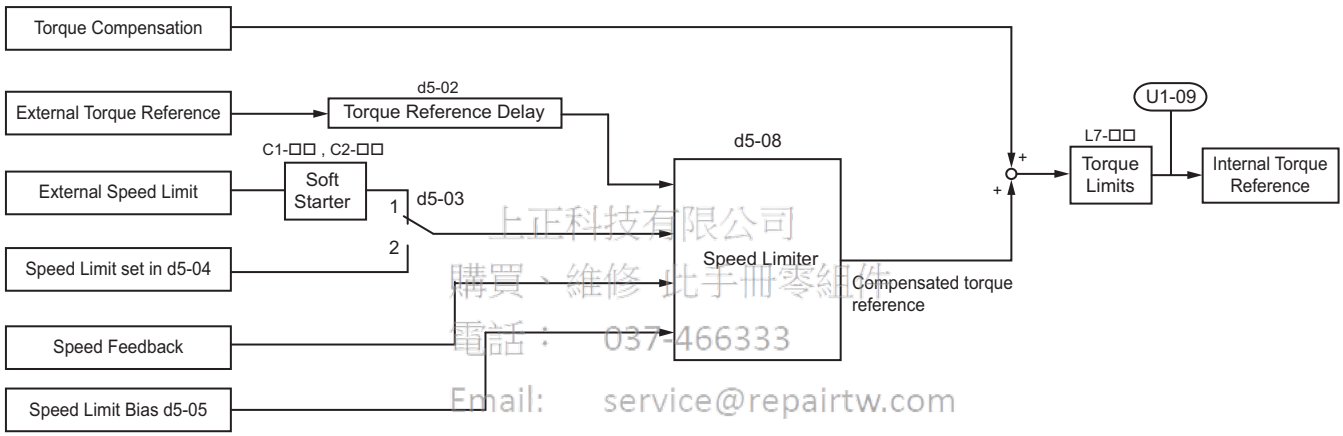

Figure 5.50 Torque Control Block Diagram

The externally input torque reference is used as the target value for the motor output torque. If the motor torque reference and the load torque are not in balance when in Torque Control, the motor accelerates or decelerates. An operation beyond the speed limit is prevented by compensating the external torque reference value if the motor speed reaches the limit. The compensation value is calculated using the speed limit, speed feedback, and the speed limit bias.

If an external torque compensation value is input, it is added to the speed limit compensated torque reference value. The value calculated is limited by the L7-☐☐ settings, and is then used as the internal torque reference, which can be monitored in U1-09. The L7-☐☐ settings have highest priority, i.e., the motor cannot be operated with a higher torque than the L7-☐☐ settings, even if the external torque reference value is increased.

■ Setting the Torque Reference, Speed Limit, and Torque Compensation Values

Torque Control Reference Sources

Input values for Torque Control can be set like explained in *Table 5.18*.

Table 5.18 Torque Control Input Value Selection

Input Value	Signal Source	Settings	Remarks
Torque Reference	Analog inputs A1/A2/A3	H3-02, H3-06, or H3-10 = 13 <I>	Make sure the signal level settings for the input terminal selected match the signal used. Refer to *H3: Multi-Function Analog Inputs on page 234* for details on adjusting analog input signals.
	Analog Option Card	• F2-01 = 0 • H3-02, H3-06, or H3-10 = 13 <I>	The F3-☐☐ settings become effective for the option board input terminals. Make sure the signal level settings for the input terminal selected match the signal used. Refer to *H3: Multi-Function Analog Inputs on page 234* for details on adjusting analog input signals.
	MEMOBUS Register 0004h	Set Register 000Fh, Bit 2 = 1 to enable Torque reference from register 0004h	–
	Communication Option Card	F6-06 = 1 Refer to the option card manual for details about setting the torque compensation value.	–

Input Value	Signal Source	Settings	Remarks
Speed Limit	Signal selected as frequency reference source	d5-03 = 1 The speed limit is taken from the input selected as frequency reference source in parameter b1-01 or b1-15. <1>	The settings in C1-☐☐ for accel/decel times and in C2-☐☐ for S-curves are applied to the speed limit value.
	Parameter d5-04	d5-03 = 2	–
Torque Compensation	Analog inputs A1/A2/A3	H3-02, H3-06, or H3-10 = 14 <1>	Make sure the signal level settings for the input terminal selected match the signal used. Refer to *H3: Multi-Function Analog Inputs on page 234* for details on adjusting analog input signals.
	Analog Option Card	• F2-01 = 0 • H3-02, H3-06, or H3-10 = 14 <1>	The H3-☐☐ settings become effective for the option card input terminals. Make sure the signal level settings for the input terminal selected match the signal used.
	MEMOBUS Register 0005h	Set Register 000Fh, bit 3 = 1 to enable the torque reference setting by register 0005h	–
	Communication Option Card	F6-06 = 1 Refer to the option card manual for details about setting the torque compensation value.	–

<1> Sets analog input terminals A1, A2, and A3 to supply the speed limit, torque reference, or torque compensation. An oPE error will occur if two analog inputs are set for the same function.

Input Value Polarity

The direction of the input values described above depends on the polarity of the Run command and the input value.

Table 5.19 Torque Control Signal Polarity

Run Command Direction	Input Value Polarity	Input Value Direction
Forward	+ (positive)	Forward direction
	- (negative)	Reverse direction
Reverse	+ (positive)	Reverse direction
	- (negative)	Forward direction

Example:

- With a Forward run command and a positive torque reference signal the internal torque reference will be positive, i.e., in the forward direction.
- With a Forward run command and a negative torque reference signal the internal torque reference will be negative, i.e., in the reverse direction.

上正科技有限公司
購買、維修 此手冊零組件
電話： 037-466333
Email: service@repairtw.com
Line id: @zzzz
www.repairtw.com

When analog inputs are used, negative input values can be generated by

- applying negative voltage input signals.
- using positive analog input signals but setting the analog input bias to negative values so that the input value can be negative.

When MEMOBUS communication or a communication option card is used, only positive input values can be set.

Independent of its input source, the polarity of the torque reference signal can be inverted using a digital input that is programmed for H1-☐☐ = 78. Use this function to input negative torque reference values when using MEMOBUS or a communication option card.

■ Speed Limitation and Speed Limit Bias

The speed limit setting is read from the input selected in parameter d5-03. A bias can be added to this speed limit using parameter d5-05 while parameter b5-08 determines how the speed limit bias is applied. *Table 5.20* explains the relation between these settings.

Table 5.20 Speed Limit, Speed Bias and Speed Limit Priority Selection

	Operating Conditions			
Run Command	Forward	Forward	Forward	Forward
Torque Reference Direction	Positive (Forward)	Negative (Reverse)	Negative (Reverse)	Positive (Forward)
Speed Limit Direction	Positive (Forward)	Negative (Reverse)	Positive (Forward)	Negative (Reverse)
Normal Operation Direction	Forward	Reverse	Forward	Reverse
Generated Torque (d5-08 = 0) <1>	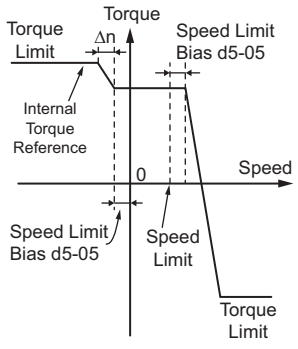	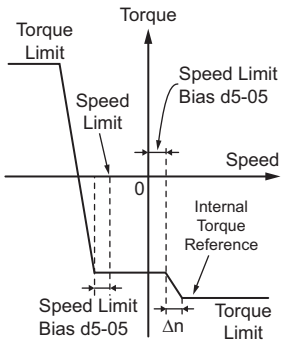	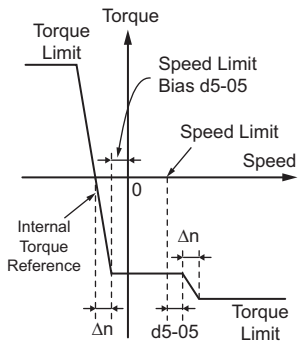	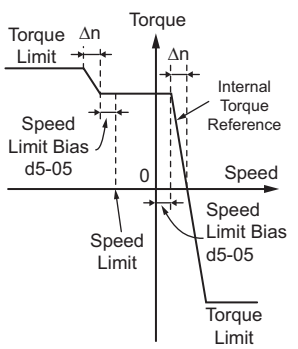
Generated Torque (d5-08 = 1) <1>	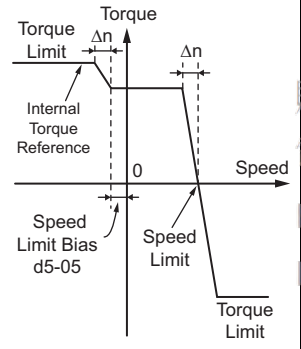	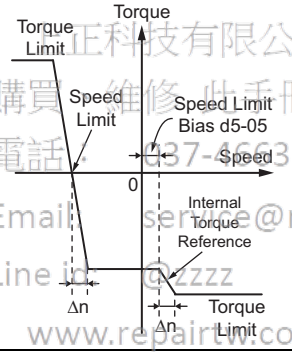	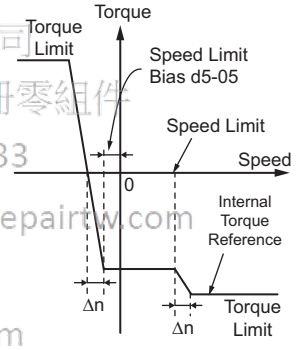	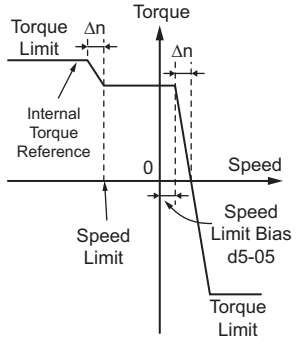
Application Example	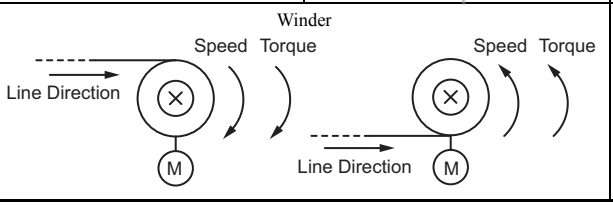		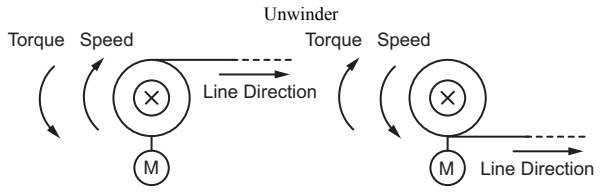	

<1> The value of delta n in the drawings depends on the ASR setting in parameters C5-☐☐.

■ Indicating Operation at the Speed Limit

A digital output can be programmed to close when the drives is operating at or beyond the speed limit (H2-☐☐ = 32). Use this output to notify a PLC or some other control device of abnormal operating conditions.

■ Switching Between Torque and Speed Control

A digital output can be used to switch Torque Control and Speed Control (H1-☐☐ = 71). When switching from Speed Control to Torque Control, the torque limit becomes the torque reference and the speed reference becomes the speed limit. This change is reversed when switching back to Speed Control.

If required by the application, a delay time can be set up using parameter d5-06. The reference values (torque reference/speed limit in Torque Control or speed reference/torque limit in Speed Control) are held during this switch delay time. Be sure to change the reference values from the controller within this delay time.

Note: 1. The switching delay time d5-06 is not applied when the Stop command is entered. Here the operation switches immediately to speed control and the drive decelerates to stop at the torque limit.

正科技有限公司
購買 維修 此手冊零組件
電話: 037-466333
Email: service@repairtw.com
Line id: @zzzz
www.repairtw.com

2. Set d5-01 to 0 when switching between Torque Control and Speed Control. An oPE15 alarm will be triggered if parameter d5-01 is set to 1 while H1-☐☐ is set to 71 at the same time.

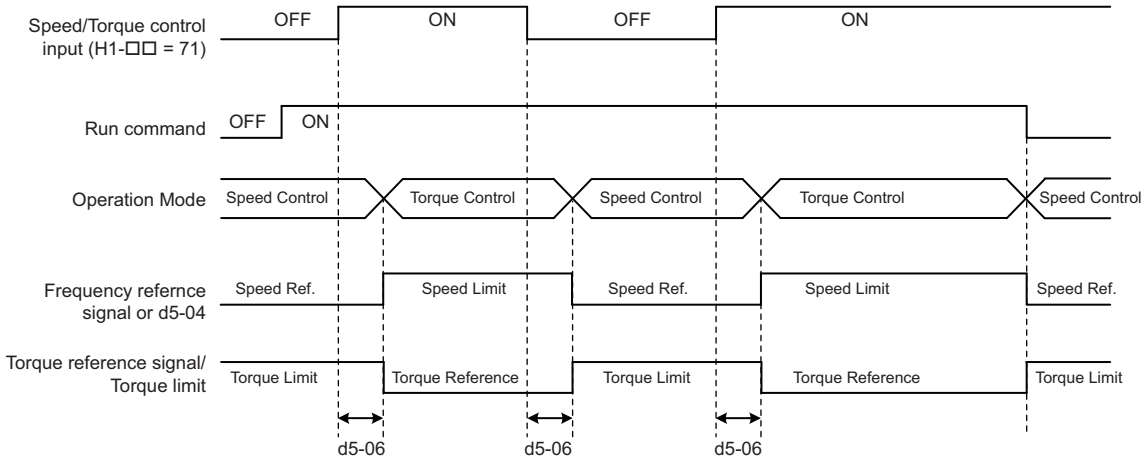

Figure 5.51 Speed/Torque Control Switching Time

■ d5-01: Torque Control Selection

No.	Parameter Name	Setting Range	Default
d5-01	Torque Control Selection	0 or 1	0

Setting 0: Disabled

Speed Control will be active. Also use this setting when H1-☐☐ = 71 (Speed/Torque Control Switch).

Setting 1: Enabled

Torque Control is always enabled.

上正科技有限公司
購買、維修 此手冊零組件
電話: 037-466333
Email: service@repairtw.com
Line id: @zzzz
www.repairtw.com

■ d5-02: Torque Reference Delay Time

A filter with the time constant set in parameter d5-02 can be applied to the torque reference signal in order to eliminate oscillation that results from an unstable torque reference signal. A higher filter time will stabilize control, but also reduce the responsiveness.

No.	Parameter Name	Setting Range	Default
d5-02	Torque Reference Delay Time	0 to 1000 ms	0 ms

■ d5-03: Speed Limit Selection

Parameter d5-03 determines how the speed limit is set.

No.	Parameter Name	Setting Range	Default
d5-03	Speed Limit Selection	1 or 2	1

Setting 1: Frequency Reference Input

The frequency reference value at the active reference source (digital operator, External reference 1 or External reference 2) will be used as speed limit. Note that in this case all settings for accel/decel times (C1-01 to C1-08) and S-curves (C2-01 to C2-04) will apply for the speed limit.

Setting 2: Parameter d5-04

The speed limit is set by parameter d5-04.

■ d5-04: Speed Limit

Sets the speed limit during torque control if parameter d5-03 is set to 2. Refer to *Speed Limitation and Speed Limit Bias on page 190*.

No.	Parameter Name	Setting Range	Default
d5-04	Speed Limit	-120 to 120%	0%

■ d5-05: Speed Limit Bias

Using d5-05 a bias can be applied to the speed limit value. The bias is set as a percentage of the maximum output frequency. Refer to *Speed Limitation and Speed Limit Bias on page 190*.

No.	Parameter Name	Setting Range	Default
d5-05	Speed Limit Bias	0 to 120%	10%

■ d5-06: Speed/Torque Control Switchover Time

Sets the delay time for switching from Speed Control to Torque Control and vice versa.

No.	Parameter Name	Setting Range	Default
d5-06	Speed/Torque Control Switchover Time	0 to 1000 ms	0 ms

■ d5-08: Unidirectional Speed Limit Bias

Parameter d5-08 selects how the speed limit bias is applied.

No.	Parameter Name	Setting Range	Default
d5-08	Unidirectional Speed Limit Bias	0 or 1	1

Setting 0: Disabled

The speed limit bias is applied in both directions, the speed limit and the opposite direction.

Setting 1: Enabled

The speed limit bias is applied in the opposite direction of the speed limit only.

上正科技有限公司
購買、維修 此手冊零組件
電話： 037-466333
Email: service@repairtw.com
Line id: @zzzz
www.repairtw.com

◆ d6: Field Weakening and Field Forcing

Field Weakening

The Field Weakening function reduces the output voltage to a pre-defined level in order to reduce the energy consumption of the motor. It can be activated using a digital input programmed for H1-☐☐ = 63. Field Weakening should only be used with a known and unchanging light load condition. Use the Energy Saving function (b8-☐☐ parameters) when Energy Saving for various different load conditions is required.

Field Forcing

The Field Forcing function compensates the delaying influence of the motor time constant when changing the excitation current reference. Field Forcing can improve the motor responsiveness. It is ineffective during DC Injection Braking.

■ d6-01: Field Weakening Level

Sets the level to what the output voltage is reduced when Field Weakening is activated. Set as percentage of the maximum output voltage.

No.	Parameter Name	Setting Range	Default
d6-01	Field Weakening Level	0 to 100%	80%

■ d6-02: Field Weakening Frequency Limit

Sets the minimum output frequency for that field weakening can be activated. For frequencies below d6-02, Field Weakening cannot be activated.

No.	Parameter Name	Setting Range	Default
d6-02	Field Weakening Frequency Limit	0 to 400.0 Hz	0.0 Hz

■ d6-03: Field Forcing Selection

Enables or disables the Field Forcing function.

No.	Parameter Name	Setting Range	Default
d6-03	Field Forcing Selection	0 or 1	0

Setting 0: Disabled
Setting 1: Enabled

■ d6-06: Field Forcing Limit

Sets the maximum level to what the Field Forcing function can boost the excitation current reference. The value is set as a percentage of the motor no load current.

No.	Parameter Name	Setting Range	Default
d6-06	Field Forcing Limit	100 to 400%	400%

Note: Adjustment is not normally required.

◆ d7: Offset Frequency

■ d7-01 to d7-03: Offset Frequency 1 to 3

Three different offset values can be added to the frequency reference. They can be selected using digital inputs programmed for Offset frequency 1, 2, and 3 (H1-□□ = 44, 45, 46). The selected offset values are added together if multiple inputs are closed at the same time.

Note: This function can be used to replace the "Trim Control" function (H1-□□ = 1C, 1D) of earlier Yaskawa drives.

No.	Parameter Name	Setting Range	Default
d7-01	Offset Frequency 1	-100.0 to 100.0%	0%
d7-02	Offset Frequency 2	-100.0 to 100.0%	0%
d7-03	Offset Frequency 3	-100.0 to 100.0%	0%

Figure 5.52 illustrates the Offset frequency function.

上正科技有限公司
購買、維修 此手冊零組件
電話： 037-466333
Email: service@repairtw.com
Line id: @zzzz
www.repairtw.com

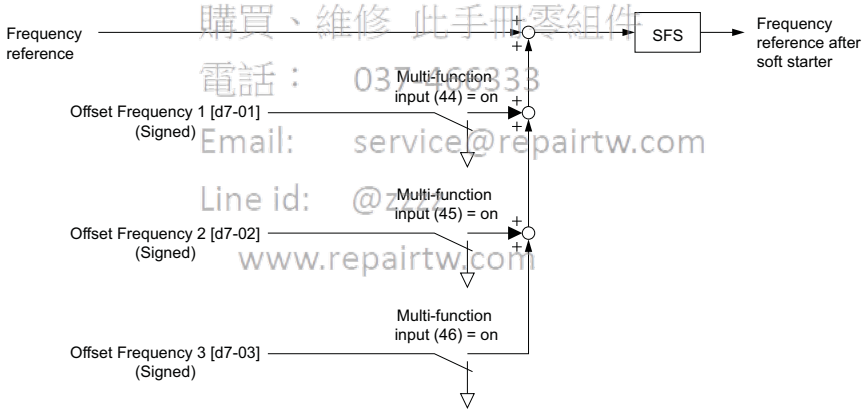

Figure 5.52 Offset Frequency Operation

5.5 E: Motor Parameters

E parameters cover V/f pattern and motor data settings.

◆ E1: V/f Pattern for Motor 1

■ E1-01: Input Voltage Setting

Set the input voltage parameter to the nominal voltage of the AC power supply. This parameter adjusts the levels of some protective features of the drive (overvoltage, Stall Prevention, etc.).

NOTICE: *Set parameter E1-01 to match the input voltage of the drive. Drive input voltage (not motor voltage) must be set in E1-01 for the protective features to function properly. Failure to set the correct drive input voltage will result in improper drive operation.*

No.	Parameter Name	Setting Range	Default
E1-01 <1>	Input Voltage Setting	155 to 255 V	200 V

<1> The setting range and default value shown here are for 200 V class drives. Double this for 400 V class units.

E1-01 Related Values

The input voltage setting determines the undervoltage detection level as well as DC bus levels used by the KEB function and the overvoltage suppression function.

Voltage	Setting Value of E1-01	(Approximate Values)		
		Uv Detection Level (L2-05)	Desired DC Bus Voltage during KEB (L2-11)	ov Suppression / Stall Prevention Level (L3-17)
200 V Class	All settings	190 V	260 V	375 V
400 V Class	setting ≥ 400 V	380 V	500 V	750 V
	setting < 400 V	350 V	460 V	750 V

Note: The braking transistor operation levels are valid for the drive internal braking transistor. If an external CDBR braking chopper is used, refer to the instruction manual of that unit.

上正機技有限公司
購買、維修 此手冊零組件
電話： 037-466333
Email: service@repairtw.com
Line id: @222
www.repairtw.com

■ V/f Pattern Settings (E1-03)

The drive uses the V/f pattern that has been set to adjust the output voltage relative to the frequency reference. There are 15 different preset V/f patterns (setting 0 to E) to select from, each with varying voltage profiles, saturation levels (frequency at which maximum voltage is reached), and maximum frequencies. Additionally, one custom V/f pattern is available (setting F). The custom V/f pattern requires the user to create the pattern using parameters E1-04 through E1-10.

■ E1-03: V/f Pattern Selection

The user can select the V/f pattern for the drive and motor from 15 predefined patterns, or create a custom V/f pattern.

No.	Parameter Name	Setting Range	Default
E1-03	V/f Pattern Selection	0 to F <1>	F <2>

<1> Parameter setting value is not reset to the default value during drive initialization (A1-03).
<2> Settings 0 through E are not available when using any of the vector control modes.

Setting a Predefined V/f Pattern (Setting 0 to E)

Choose the V/f pattern that best meets the application demands from the table below. These settings are available only in V/f Control modes. Set the correct value to E1-03. Parameters E1-04 to E1-13 can only be monitored, not changed.

Note: **1.** Setting an improper V/f pattern may result in low motor torque or increased current due to overexcitation.
2. Parameter E1-03 is not reset when the drive is initialized.

Table 5.21 Predefined V/f Patterns

Setting	Specification	Characteristic	Application
0	50 Hz	Constant torque	For general purpose applications. Torque remains constant regardless of changes to speed.
1	60 Hz		
2	60 Hz (with 50 Hz base)		
3	72 Hz (with 60 Hz base)		

Setting	Specification	Characteristic	Application
4	50 Hz, Heavy Duty 2	Derated torque	For fans, pumps, and other applications that require torque derating relative to the load.
5	50 Hz, Heavy Duty 1		
6	50 Hz, Heavy Duty 1		
7	50 Hz, Heavy Duty 2		
8	50 Hz, mid starting torque	High starting torque	Select high starting torque when: • Wiring between the drive and motor exceeds 150 m • A large amount of starting torque is required • An AC reactor is installed
9	50 Hz, high starting torque		
A	60 Hz, mid starting torque		
B	60 Hz, high starting torque		
C	90 Hz (with 60 Hz base)	Constant output	Output voltage is constant when operating at greater than 60 Hz.
D	120 Hz (with 60 Hz base)		
E	180 Hz (with 60 Hz base)		

The following tables show details on predefined V/f patterns.

The following graphs are for 200 V class drives. Double the values when using a 400 V class drive.

Predefined V/f Patterns for models CIMR-A□2A0004 to 0021 and CIMR-A□4A0002 to 0011

Table 5.22 Constant Torque Characteristics, Settings 0 to 3

Setting = 0	50 Hz	Setting = 1	60 Hz	Setting = 2	60 Hz	Setting = 3	72 Hz
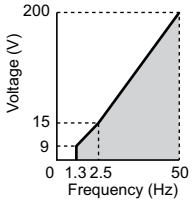		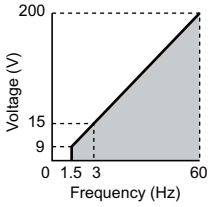		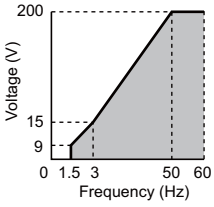		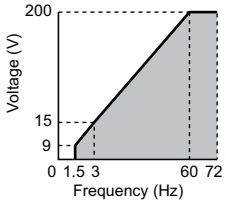	

上正科技有限公司
購買、維修 此手冊零組件
電話： 037-466338
Email: service@repairtw.com
Line id: @zzzz
www.repairtw.com

Table 5.23 Derated Torque Characteristics, Settings 4 to 7

Setting = 4	50 Hz	Setting = 5	50 Hz	Setting = 6	60 Hz	Setting = 7	60 Hz
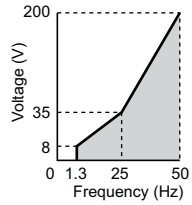		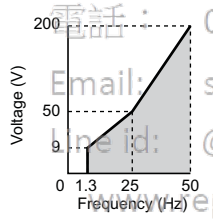		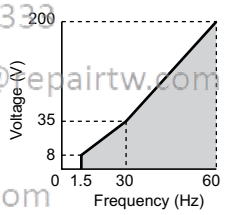		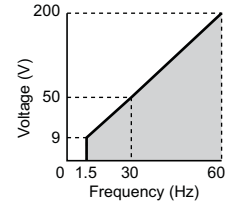	

Table 5.24 High Starting Torque, Settings 8 to B

Setting = 8	50 Hz	Setting = 9	50 Hz	Setting = A	60 Hz	Setting = B	60 Hz
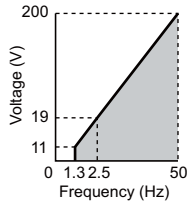		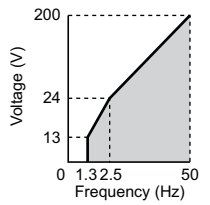		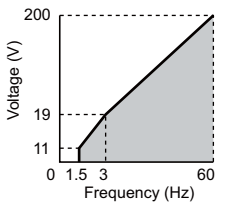		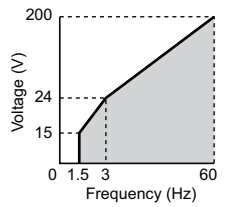	

Table 5.25 Rated Output Operation, Settings C to F

Setting = C	90 Hz	Setting = D	120 Hz	Setting = E	180 Hz	Setting = F	60 Hz
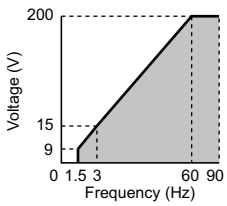		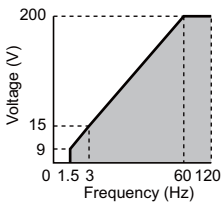		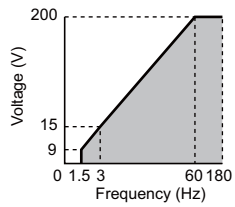		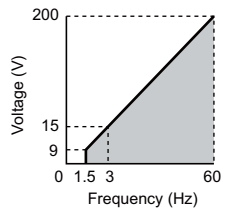	

Predefined V/f Patterns for Models CIMR-A□2A0030 to 0211 and CIMR-A□4A0018 to 0103

The following graphs are for 200 V class drives. Double values when using a 400 V class drive.

Table 5.26 Rated Torque Characteristics, Settings 0 to 3

Setting = 0	50 Hz	Setting = 1	60 Hz	Setting = 2	60 Hz	Setting = 3	72 Hz
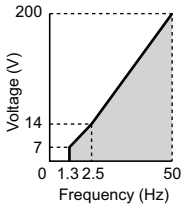		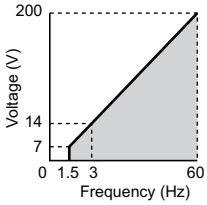		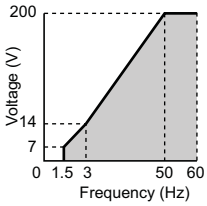		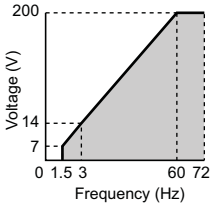	

Table 5.27 Derated Torque Characteristics, Settings 4 to 7

Setting = 4	50 Hz	Setting = 5	50 Hz	Setting = 6	60 Hz	Setting = 7	60 Hz
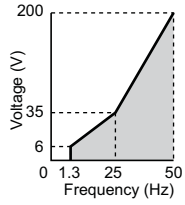		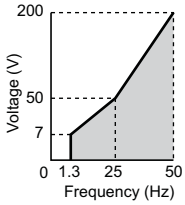		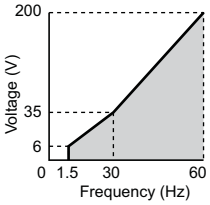		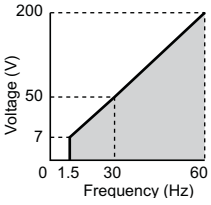	

Table 5.28 High Starting Torque, Settings 8 to B

Setting = 8	50 Hz	Setting = 9	50 Hz	Setting = A	60 Hz	Setting = B	60 Hz
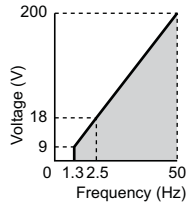		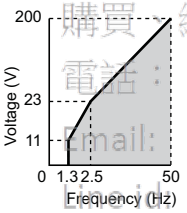		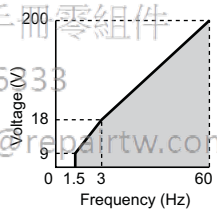		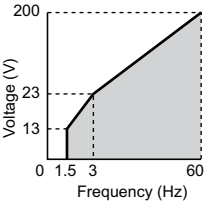	

上正國技有限公司
購買、維修 此手冊零組件
電話： 037-466233
Email: service@repairtw.com
Line id: @zzzz
www.repairtw.com

Table 5.29 Constant Output, Settings C to F

Setting = C	90 Hz	Setting = D	120 Hz	Setting = E	180 Hz	Setting = F	60 Hz
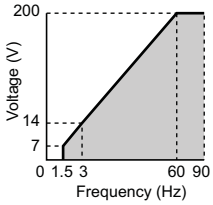		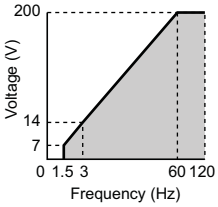		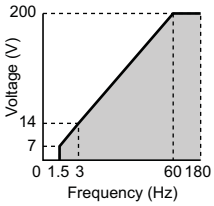		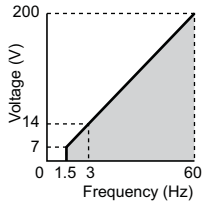	

Predefined V/f Patterns for Models CIMR-A□2A0250 to 0415 and CIMR-A□4A0139 to 0675

The following graphs are for 200 V class drives. Double values when using a 400 V class drive.

Table 5.30 Rated Torque Characteristics, Settings 0 to 3

Setting = 0	50 Hz	Setting = 1	60 Hz	Setting = 2	60 Hz	Setting = 3	72 Hz
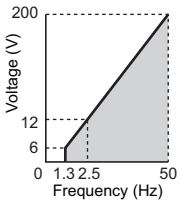		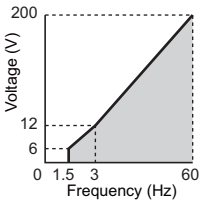		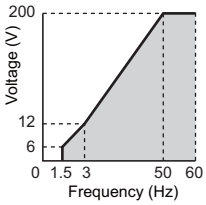		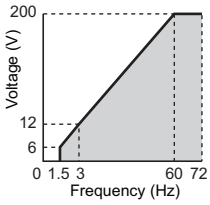	

Table 5.31 Derated Torque Characteristics, Settings 4 to 7

Setting = 4	50 Hz	Setting = 5	50 Hz	Setting = 6	60 Hz	Setting = 7	60 Hz
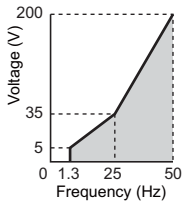		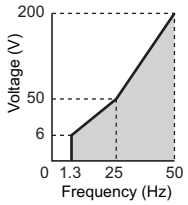		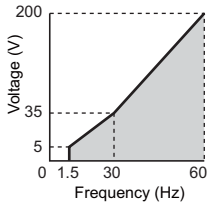		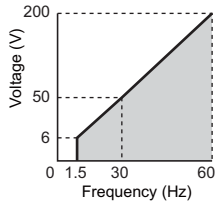	

Table 5.32 High Starting Torque, Settings 8 to B

Setting = 8	50 Hz	Setting = 9	50 Hz	Setting = A	60 Hz	Setting = B	60 Hz
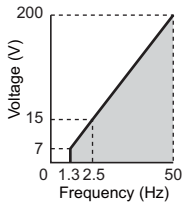		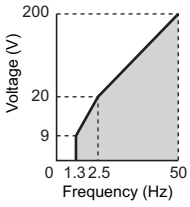		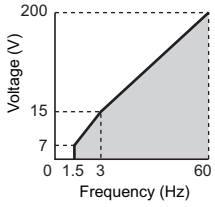		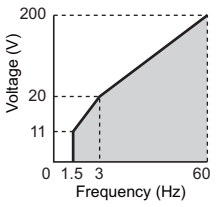	

Table 5.33 Constant Output, Settings C to F

Setting = C	90 Hz	Setting = D	120 Hz	Setting = E	180 Hz	Setting = F	60 Hz
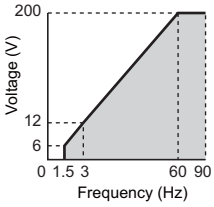		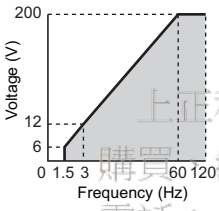		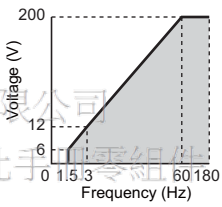		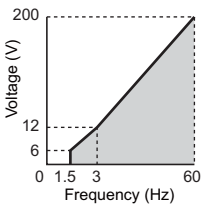	

上能科技有限公司
購買、維修 此手冊零組件
電話： 037-466333
Email: service@repairtw.com
Line id: @zzz
www.repairtw.com

Setting a Custom V/f Pattern (Setting F: Default)

Setting parameter E1-03 to F allows to set up a custom V/f pattern by changing parameters E1-04 to E1-13.

When initialized, the default values for parameters E1-04 to E1-13 will be equal to V/f pattern 0 of the predefined patterns.

■ V/f Pattern Settings E1-04 to E1-13

If E1-03 is set to a preset V/f pattern (i.e., set to any value besides F), then the user can refer to parameters E1-04 through E1-13 to monitor the V/f pattern. To create a new V/f pattern, set E1-03 to F. Refer to ***Figure 5.53*** for an example custom V/f pattern.

Note: Certain E1-☐☐ parameters might not be visible depending on the selected control mode. ***Refer to Parameter Table on page 400*** for details.

No.	Parameter Name	Setting Range	Default
E1-04	Maximum Output Frequency	40.0 to 400.0 Hz	<1> <2>
E1-05	Maximum Voltage	0.0 to 255.0 V <3>	<1> <3>
E1-06	Base Frequency	0.0 to [E1-04]	<1> <2>
E1-07	Middle Output Frequency	0.0 to [E1-04]	<1>
E1-08	Middle Output Frequency Voltage	0.0 to 255.0 V <3>	<1> <3>
E1-09	Minimum Output Frequency	0.0 to [E1-04]	<1> <2>
E1-10	Minimum Output Frequency Voltage	0.0 to 255.0 V <3>	<1> <3>
E1-11	Middle Output Frequency 2	0.0 to [E1-04]	0.0 Hz <5>
E1-12	Middle Output Frequency Voltage 2	0.0 to 255.0 V <3>	0.0 V <3> <4> <5>
E1-13	Base Voltage	0.0 to 255.0 V <3>	0.0 V <3> <4>

<1> Default setting is determined by the control mode.
<2> When using PM motors, the default setting is determined by the motor code set to E5-01.
<3> Values shown here are for 200 V class drives. Double values when using a 400 V class unit.
<4> The drive changes these settings when Auto-Tuning is performed (Rotational Auto-Tuning, Stationary Auto-Tuning 1, 2).
<5> Parameter ignored when E1-11 and E1-12 are set to 0.0.

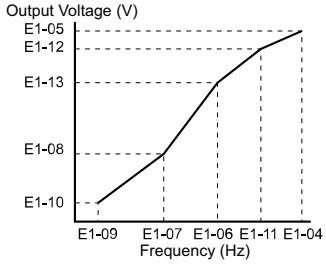

Figure 5.53 V/f Pattern

Note: **1.** The following condition must be true when setting up the V/f pattern: E1-09 ≤ E1-07 < E1-06 ≤ E1-11 ≤ E1-04
2. To make the V/f pattern a straight line below E1-06, set E1-09 = E1-07. In this case the E1-08 setting is disregarded.
3. E1-03 is unaffected when the parameters are initialized using parameter A1-03, but the settings for E1-04 through E1-13 are returned to their default values.
4. Parameters E1-11, E1-12, and E1-13 should only be used to fine-tune the V/f pattern in the constant output range. These parameters rarely need to be changed.

◆ E2: Motor 1 Parameters

These parameters contain the motor data needed for motor 1. They are set automatically when Auto-Tuning is performed (this includes Rotational Auto-Tuning, Stationary Auto-Tuning 1 and 2). If Auto-Tuning cannot be performed, then manually enter the motor data directly to these parameters.

Note: As the motor parameters for a PM motor are set up in the E5-□□ parameters, parameters for induction motors (E2-□□) are hidden when a PM motor control mode is selected for motor 1 (i.e., parameter A1-02 is set to 5, 6, or 7).

■ E2-01: Motor Rated Current

Set E2-01 to the full load amps (FLA) stamped on the motor nameplate. This value is used for motor protection and to calculate torque limits. If Auto-Tuning completes successfully, the value entered to T1-04 will automatically be saved to E2-01.

上正科技有限公司
購買、維修 此手冊零組件
電話： 037-466333
Email: service@repairtw.com
Line id: @zzzz
www.repairtw.com

No.	Parameter Name	Setting Range	Default
E2-01	Motor Rated Current	10% to 200% of the drive rated current.	Determined by C6-01 and o2-04

Note: This value's number of decimal places depends on the drive model and the Heavy/Normal duty selection in parameter C6-01. The value will have two decimal places (0.01 A) if the drive is set for a Maximum Applicable Motor Capacity up to 11 kW (refer to ***Table A.2*** and ***Table A.3***) and one decimal place (0.1 A) if the set Maximum Applicable Motor Capacity is higher than 11 kW.

Note: If the motor rated current in E2-01 is set lower than the motor no-load current in E2-03, than a parameter setting error will occur (oPE02). E2-03 must be set correctly to prevent this error.

■ E2-02: Motor Rated Slip

Sets the motor rated slip in Hz. The setting in E2-02 is used for motor protection and to calculate torque limits. This value is automatically set during Auto-Tuning (Rotational Auto-Tuning, Stationary Auto-Tuning 1 and 2).

No.	Parameter Name	Setting Range	Default
E2-02	Motor Rated Slip	0.00 to 20.00 Hz	Determined by C6-01 and o2-04

If Auto-Tuning cannot be performed, calculate the motor rated slip using the information written on the motor nameplate and the formula below:

$E2\text{-}02 = f - (n \times p)/120$

(f: rated frequency (Hz), n: rated motor speed (r/min), p: number of motor poles)

■ E2-03: Motor No-Load Current

Set the no-load current for the motor in amperes when operating at the rated frequency and the no-load voltage. The drive sets E2-03 during the Auto-Tuning process (Rotational Auto-Tuning and Stationary Auto-Tuning 1, 2). The motor no-load current listed in the motor test report can also be entered to E2-03 manually. Contact the motor manufacturer to receive a copy of the motor test report.

No.	Parameter Name	Setting Range	Default
E2-03	Motor No-Load Current	0 to [E2-01] (unit: 0.01 A)	Determined by C6-01 and o2-04

Note: This value's number of decimal places depends on the drive model and the Heavy/Normal duty selection in parameter C6-01. The value will have two decimal places (0.01 A) if the drive is set for a Maximum Applicable Motor Capacity up to 11 kW (refer to ***Table A.2*** and ***Table A.3***) and one decimal place (0.1 A) if the set Maximum Applicable Motor Capacity is higher than 11 kW

■ E2-04: Number of Motor Poles

Set the number of motor poles to E2-04. If Auto-Tuning completes successfully, the value entered to T1-06 will automatically be saved to E2-04.

No.	Parameter Name	Setting Range	Default
E2-04	Number of Motor Poles	2 to 48	4

■ E2-05: Motor Line-to-Line Resistance

Sets the line-to-line resistance of the motor stator winding. If Auto-Tuning completes successfully, this value is automatically calculated. Remember that this value must be entered as line-to-line and not for each motor phase.

If Auto-Tuning is not possible, then contact the motor manufacturer to find out the line-to-line resistance or measure it manually. When using the manufacturer motor test report, calculate E2-05 by the formulas below.

- E-type insulation: Multiply 0.92 times the resistance value (Ω) listed on the test report at 75°C
- B-type insulation: Multiply 0.92 times the resistance value (Ω) listed on the test report at 75°C.
- F-type insulation: Multiply 0.87 times the resistance value (Ω) listed on the test report at 115°C.

上正科技有限公司
購買、維修 此手冊零組件
電話： 037-466333
Email: service@repairtw.com
Line id: @zzzz
www.repairtw.com

No.	Parameter Name	Setting Range	Default
E2-05	Motor Line-to-Line Resistance	0.000 to 65.000 Ω	Determined by C6-01 and o2-04

■ E2-06: Motor Leakage Inductance

Sets the voltage drop due to motor leakage inductance as a percentage of motor rated voltage. This value is automatically set during Auto-Tuning (Rotational Auto-Tuning, Stationary Auto-Tuning 1, 2).

No.	Parameter Name	Setting Range	Default
E2-06	Motor Leakage Inductance	0.0 to 40.0%	Determined by C6-01 and o2-04

■ E2-07: Motor Iron-Core Saturation Coefficient 1

Sets the motor iron saturation coefficient at 50% of the magnetic flux. If Rotational Auto-Tuning completes successfully, then this value is automatically calculated and set to E2-07. This coefficient is used when operating with constant output.

No.	Parameter Name	Setting Range	Default
E2-07	Motor Iron-Core Saturation Coefficient 1	0.00 to 0.50	0.50

■ E2-08: Motor Iron-Core Saturation Coefficient 2

Sets the motor iron saturation coefficient at 75% of the magnetic flux. If Rotational Auto-Tuning completes successfully, then this value is automatically and set to E2-08. This coefficient is used when operating with constant output.

No.	Parameter Name	Setting Range	Default
E2-08	Motor Iron-Core Saturation Coefficient 2	E2-07 to 0.75	0.75

■ E2-09: Motor Mechanical Loss

This parameter sets to the motor mechanical loss as a percentage of motor rated power (kW) capacity.

Adjust this setting in the following circumstances:

- When there is a large amount of torque loss due to motor bearing friction.
- When there is a large amount of torque loss in a fan or pump application.

The setting for the mechanical loss is added to the torque.

No.	Parameter Name	Setting Range	Default
E2-09	Motor Mechanical Loss	0.0 to 10.0%	0.0%

■ E2-10: Motor Iron Loss for Torque Compensation

This parameter sets the motor iron loss in watts.

No.	Parameter Name	Setting Range	Default
E2-10	Motor Iron Loss for Torque Compensation	0 to 65535 W	Determined by C6-01 and o2-04

■ E2-11: Motor Rated Power

This parameter sets the motor rated power in kW. If Auto-Tuning completes successfully, the value entered to T1-02 will automatically be saved to E2-11.

No.	Parameter Name	Setting Range	Default
E2-11	Motor Rated Power	0.00 to 650.00 kW	Determined by o2-04

上正科技有限公司
購買、維修 此手冊零組件
電話： 037-466333
Email: service@repairtw.com
Line id: @zzzz
www.repairtw.com

■ Setting Motor Parameters Manually

Follow the instructions below when setting motor-related parameters manually instead of using the Auto-Tuning feature. Refer to the motor test report included with the motor to make sure the correct data is entered into the drive.

Setting the Motor Rated Current

Enter the motor rated current listed on the nameplate of the motor to E2-01.

Setting the Motor Rated Slip

Use the base speed listed on the motor nameplate to calculate the rated slip. Refer to the formula below, then enter that value to E2-02.

Motor rated slip = rated frequency [Hz] –base speed [r/min] × (no. of motor poles) / 120

Setting the No-Load Current

Enter the no-load current at rated frequency and rated voltage to E2-03. The no-load current is not usually listed on the nameplate. Contact the motor manufacturer if the data cannot be found.

The default setting of the no-load current is for performance with a 4-pole Yaskawa motor.

Setting the Number of Motor Poles

Only required in V/f Control with PG and Closed Loop Vector Control. Enter the number of motor poles as indicated on motor nameplate.

Setting the Line-to-Line Resistance

E2-05 is normally set during Auto-Tuning. If Auto-Tuning cannot be performed, contact the manufacturer of the motor to find out what the correct resistance is between motor lines. The motor test report can also be used to calculate this value:

- E-type insulation: Multiply 0.92 times the resistance value (Ω) listed on the test report at 75°C.
- B-type insulation: Multiply 0.92 times the resistance value (Ω) listed on the test report at 75°C.
- F-type insulation: Multiply 0.87 times the resistance value (Ω) listed on the test report at 115°C.

Setting the Motor Leakage Inductance

The motor leakage inductance set to E2-06 determines the amount of voltage drop relative to the motor rated voltage. This value should be entered particularly for motors with a low degree of inductance, such as high-speed motors. As this

information is not listed on the motor nameplate, contact the motor manufacturer to find out the correct value for the motor leakage inductance.

Setting the Motor Iron-Core Saturation Coefficient 1, 2

E2-07 and E2-08 are set when Auto-Tuning is performed.

Setting the Motor Mechanical Loss

The drive only requires this information when using Closed Loop Vector Control. The drive compensates for the degree of mechanical loss with torque compensation. Although E2-09 rarely needs to be changed, adjustment may benefit the following circumstances:

- When there is a large amount of torque loss due to motor bearing friction.
- When there is a large amount of torque loss in a fan or pump application.

Setting the Motor Iron Loss for Torque Compensation

This value only needs to be set when using V/f Control. Enter this value in watts to E2-10. The drive uses this setting to improve the precision of torque compensation.

◆ E3: V/f Pattern for Motor 2

These parameters set the V/f pattern used for motor 2. *Refer to Setting 16: Motor 2 selection on page 219* for details on switching motors.

Note: As the function for switching between two motors cannot be used with a PM motor, the E3-☐☐ parameters will be hidden when a PM motor control mode is selected (A1-02 = 5, 6, or 7).

■ E3-01: Motor 2 Control Mode Selection

Selects the control mode for motor 2. A control mode for PM motors cannot be selected for motor 2.

上正科技有限公司
購買、維修 此手冊零組件
電話: 037-466333
Email: service@repairtw.com
Line id: @zzzz
www.repairtw.com

No.	Parameter Name	Setting Range	Default
E3-01	Motor 2 Control Mode Selection	0 to 3	0

Setting 0: V/f Control
Setting 1: V/f Control with PG
Setting 2: Open Loop Vector Control
Setting 3: Closed Loop Vector Control

Note: Protection from motor overload (oL1) is determined by L1-01, just as it is for motor 1.

■ E3-04 to E3-13

Parameters E3-04 through E3-13 set up the V/f pattern used for motor 2 as shown in *Figure 5.54*.

Note: Certain E3-☐☐ parameters might not be visible depending on the control mode. *Refer to Parameter Table on page 400*.

No.	Parameter Name	Setting Range	Default
E3-04	Motor 2 Max Output Frequency	40.0 to 400.0 Hz	<2>
E3-05	Motor 2 Max Voltage	0.0 to 255.0 <1>	<1> <2>
E3-06	Motor 2 Base Frequency	0.0 to [E3-04]	<2>
E3-07	Motor 2 Mid Output Frequency	0.0 to [E3-04]	<2>
E3-08	Motor 2 Mid Output Frequency Voltage	0.0 to 255.0 <1>	<1> <2>
E3-09	Motor 2 Minimum Output Frequency	0.0 to [E3-04]	<2>
E3-10	Motor 2 Minimum Output Frequency Voltage	0.0 to 255.0 <1>	<1> <2>
E3-11	Motor 2 Mid Output Frequency 2	0.0 to [E3-04]	0.0 Hz <4>
E3-12	Motor 2 Mid Output Frequency Voltage 2	0.0 to 255.0 <1>	0.0 V <1> <3> <4>
E3-13	Motor 2 Base Voltage	0.0 to 255.0 <1>	0.0 V <1> <3>

<1> Values shown here are for 200 V class drives. Double the value when using a 400 V class drive.
<2> Default setting is determined by the control mode selected for motor 2 (E3-01).
<3> The drive sets this value when Auto-Tuning is performed (Rotational Auto-Tuning and Stationary Auto-Tuning 1, 2).
<4> Parameter ignored when E3-11 and E3-12 are set to 0.0.

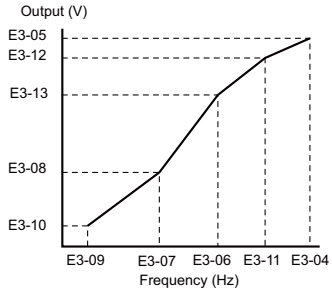

Figure 5.54 V/f Pattern for Motor 2

Note:
1. The following conditions must be true when setting up the V/f pattern: E3-09 ≤ E3-07 < E3-06 ≤ E3-11 ≤ E3-04
2. To make the V/f pattern a straight line at a frequency lower than E3-07, set E3-09 = E3-07. With this setting, E3-08 is disregarded.
3. Parameters E3-04 through E3-13 are reset to their default values when the drive is initialized.
4. E3-11, E3-12, and E3-13 rarely need to be changed, and should only be used to fine-tune the V/f pattern in the constant output range.

◆ E4: Motor 2 Parameters

E4 parameters contain the motor data for motor 2. These parameters are usually set automatically during the Auto-Tuning process for vector control modes (Rotational Auto-Tuning, Stationary Auto-Tuning 1 and 2). They may need to be set manually if there is a problem performing Auto-Tuning.

Note: As the function for switching between two motors cannot be used with a PM motor, the E5-□□ parameters will be hidden when a PM motor control mode is selected (A1-02 = 5, 6, or 7).

■ E4-01: Motor 2 Rated Current

Set E4-01 to the full load amps (FLA) stamped on the nameplate of motor 2. This value is used for motor protection and to calculate torque limits. If Auto-Tuning completes successfully, the value entered to T1-04 will automatically be saved to E4-01.

巨匠科技股份有限公司
購買、維修 此手冊零組件
電話： 037-466333
Email: service@repairtw.com
www.repairtw.com

No.	Parameter Name	Setting Range	Default
E4-01	Motor 2 Rated Current	10 to 200% of the drive rated current.	Determined by C6-01 and o2-04

Note:
1. This value's number of decimal places depends on the drive model and the Heavy/Normal duty selection in parameter C6-01. The value will have two decimal places (0.01 A) if the drive is set for a Maximum Applicable Motor Capacity up to 11 kW (refer to ***Table A.2*** and ***Table A.3***) and one decimal place (0.1 A) if the set Maximum Applicable Motor Capacity is higher than 11 kW
2. If the motor rated current in E4-01 is set lower than the motor no-load current in E4-03, then a parameter setting error will occur (oPE02). E4-03 must be set correctly to prevent this error.

■ E4-02: Motor 2 Rated Slip

This parameter sets the motor 2 rated slip frequency. Slip compensation is based on this value. The drive calculates this value automatically during Auto-Tuning (Rotational Auto-Tuning and Stationary Auto-Tuning 1, 2).

For information on calculating the motor rated slip, refer to ***E2-02: Motor Rated Slip on page 198***.

No.	Parameter Name	Setting Range	Default
E4-02	Motor 2 Rated Slip	0.00 to 20.00 Hz	Determined by C6-01 and o2-04

■ E4-03: Motor 2 Rated No-Load Current

Set the no-load current for motor 2 in amperes when operating at the rated frequency and the no-load voltage. The drive sets E2-03 during the Auto-Tuning process (Rotational Auto-Tuning and Stationary Auto-Tuning 1, 2). The motor no-load current listed in the motor test report can also be entered to E2-03 manually. Contact the motor manufacturer to receive a copy of the motor test report.

No.	Parameter Name	Setting Range	Default
E4-03	Motor 2 Rated No-Load Current	0 to [E4-01]	Determined by C6-01 and o2-04

Note: This value's number of decimal places depends on the drive model and the Heavy/Normal duty selection in parameter C6-01. The value will have two decimal places (0.01 A) if the drive is set for a Maximum Applicable Motor Capacity up to 11 kW (refer to ***Table A.2*** and ***Table A.3***) and one decimal place (0.1 A) if the set Maximum Applicable Motor Capacity is higher than 11 kW.

■ E4-04: Motor 2 Motor Poles

Set the pole number of motor 2 to E4-04. If Auto-Tuning completes successfully, the entered value to T1-06 will be automatically saved to E4-04.

No.	Parameter Name	Setting Range	Default
E4-04	Motor 2 Motor Poles	2 to 48	4

■ E4-05: Motor 2 Line-to-Line Resistance

Sets the line-to-line resistance for the motor 2 stator winding. If Auto-Tuning completes successfully, this value is automatically calculated. Remember this value must be entered as line-to-line and not for each motor phase. *Refer to E2-05: Motor Line-to-Line Resistance on page 199* to manually enter this parameter setting.

No.	Parameter Name	Setting Range	Default
E4-05	Motor 2 Line-to-Line Resistance	0.000 to 65.000 Ω	Determined by C6-01 and o2-04

■ E4-06: Motor 2 Leakage Inductance

Sets the voltage drop due to motor leakage inductance as a percentage of rated voltage of motor 2. This value is automatically set during Auto-Tuning (Rotational Auto-Tuning and Stationary Auto-Tuning 1, 2).

No.	Parameter Name	Setting Range	Default
E4-06	Motor 2 Leakage Inductance	0.0 to 40.0%	Determined by C6-01 and o2-04

■ E4-07: Motor 2 Motor Iron-Core Saturation Coefficient 1

Sets the motor 2 iron saturation coefficient at 50% of magnetic flux. This value is automatically set during Rotational Auto-Tuning. Adjust this parameter when operating in the constant output range.

上正科技有限公司
購買、維修此手冊零組件
電話： 037-466333
Email: service@repairtw.com
Line id: @zzzz

No.	Parameter Name	Setting Range	Default
E4-07	Motor 2 Motor Iron-Core Saturation Coefficient 1	0.00 to 0.50	0.50

■ E4-08: Motor 2 Motor Iron-Core Saturation Coefficient 2

Sets the motor iron saturation coefficient at 75% of magnetic flux. This value is automatically set during Rotational Auto-Tuning. Adjust this parameter when operating in the constant output range.

No.	Parameter Name	Setting Range	Default
E4-08	Motor 2 Motor Iron-Core Saturation Coefficient 2	[E4-07] to 0.75	0.75

■ E4-09: Motor 2 Mechanical Loss

Sets the motor mechanical loss as a percentage of motor rated power (kW).

This parameter seldom needs to be changed, but may need to be adjusted in the following circumstances:

- When there is a large amount of torque loss due to motor bearing friction.
- When there is a large amount of torque loss in a fan or pump application.

The setting for the mechanical loss is added to the torque.

No.	Parameter Name	Setting Range	Default
E4-09	Motor 2 Mechanical Loss	0.0 to 10.0%	0.0%

■ E4-10: Motor 2 Iron Loss

Sets the motor 2 iron loss in watts.

No.	Parameter Name	Setting Range	Default
E4-10	Motor 2 Iron Loss	0 to 65535 W	Determined by C6-01 and o2-04

■ E4-11: Motor 2 Rated Power

Sets the motor 2 rated power. If Auto-Tuning completes successfully, the value entered to T1-02 will automatically be saved to E4-11.

No.	Parameter Name	Setting Range	Default
E4-11	Motor 2 Rated Power	0.00 to 650.00 kW	Determined by o2-04

◆ E5: PM Motor Settings

These parameters set the motor data of a PM motor.

When Yaskawa motors are used, entering the motor code written on the motor nameplate will set up the E5-☐☐ parameters.

For all other PM motors, Auto-Tuning can be performed. If motor data is known, it can also be entered manually.

Note: **1.** E5-☐☐ parameters are visible only when a PM motor control mode is selected (A1-02 = 5, 6, or 7).
2. E5-☐☐ parameters are not reset when the drive is initialized using parameter A1-03.

■ E5-01: Motor Code Selection

When Yaskawa motors are used, set the motor code for the PM motor being used. Depending on the motor code entered, the drive automatically sets several parameters to appropriate values. *Refer to Parameters that Change with the Motor Code Selection on page 463* for details on the supported motor codes and their parameter settings.

Setting parameter E5-01 to FFFF will allow to set the motor data manually using the E5-☐☐ parameters.

No.	Parameter Name	Setting Range	Default
E5-01	Motor Code Selection	0000 to FFFF	Determined by A1-02, C6-01 and o2-04

[illegible]科技有限公司
購買、維修 此手冊零組件
電話： 037 466333
Email: service@repairtw.com
Line id: @zzzz
www.repairtw.com

Note: **1.** If E5-01 was set a value besides FFFF and is then changed to FFFF, the value of parameters E5-02 through E5-24 will not change.
2. If using a different motor other than Yaskawa's SMRA, SSR1, or SST4 series, then E5-01 should be set to FFFF.
3. The default setting is below:
• OLV/PM, AOLV/PM: Yaskawa SSR1 Series (1750 r/min)
• CLV/PM: Yaskawa SSR4 Series (1750 r/min)

■ E5-02: Motor Rated Power

Sets the rated power of the motor. Determined by the value set to T2-04 during Stationary Auto-Tuning for PM motors or by entering the motor code to E5-01.

No.	Parameter Name	Setting Range	Default
E5-02	Motor Rated Power	0.10 to 650.00 kW	Determined by E5-01

■ E5-03: Motor Rated Current

Sets the motor rated current in amps. This parameter is automatically set when the value is entered to T2-06 during the Auto-Tuning process.

No.	Parameter Name	Setting Range	Default
E5-03	Motor Rated Current	10 to 200% of drive rated current	Determined by E5-01

Note: This value's number of decimal places depends on the drive model and the Heavy/Normal duty selection in parameter C6-01. The value will have two decimal places (0.01 A) if the drive is set for a Maximum Applicable Motor Capacity up to 11 kW (refer to *Table A.2* and *Table A.3*) and one decimal place (0.1 A) if the set Maximum Applicable Motor Capacity is higher than 11 kW.

■ E5-04: Number of Motor Poles

Sets the number of motor poles. This parameter is automatically set when the value is entered to T2-08 during the Auto-Tuning process.

No.	Parameter Name	Setting Range	Default
E5-04	Number of Motor Poles	2 to 48	Determined by E5-01

■ E5-05: Motor Stator Resistance (r1)

Set the resistance for one motor phase. When measuring the resistance manually, make sure not to enter the line-to-line resistance into E5-05.

No.	Parameter Name	Setting Range	Default
E5-05	Motor Stator Resistance	0.000 to 65.000 Ω	Determined by E5-01

■ E5-06: Motor d-Axis Inductance (Ld)

Sets the d-axis inductance in 0.01 mH units. This parameter is set during the Auto-Tuning process.

No.	Parameter Name	Setting Range	Default
E5-06	Motor d-Axis Inductance	0.00 to 300.00 mH	Determined by E5-01

■ E5-07: Motor q-Axis Inductance (Lq)

Sets the q-axis inductance in 0.01 mH units. This parameter is set during the Auto-Tuning process.

No.	Parameter Name	Setting Range	Default
E5-07	Motor q-Axis Inductance	0.00 to 600.00 mH	Determined by E5-01

■ E5-09: Motor Induction Voltage Constant 1 (Ke)

Set the induced peak voltage per phase in units of 0.1 mV/(rad/s) [electrical angle]. Set this parameter when using an SSR1 series IPM motor with derated torque or an SST4 series IPM motor with constant torque.

When E5-01 is set to FFFF, use either E5-09 or E5-24 for setting the voltage constant. This parameter is set during Parameter Auto-Tuning for PM motors.

上正科技有限公司
購買、維修 此手冊零組件
電話：037-466333
Email: service@epairtw.com
Line ID: @zzzz
www.repairtw.com

No.	Parameter Name	Setting Range	Default
E5-09	Motor Induction Voltage Constant 1	0.0 to 2000.0 mV/(rad/s)	Determined by E5-01

Note: Ensure that E5-24 = 0 when setting parameter E5-09. An alarm will be triggered, however, if both E5-09 and E5-24 are set 0, or if neither parameter is set to 0. When E5-01 = FFFF, then E5-09 = 0.0.

■ E5-11 Encoder Z-Pulse Offset (Δθ)

Sets the offset between the rotor magnetic axis and the Z-pulse of the encoder connected. This parameter is set during Parameter Auto-Tuning for PM motors and during Z Pulse Tuning.

No.	Parameter Name	Setting Range	Default
E5-11	Encoder Z-Pulse Offset	-180.0 to 180.0 deg	0.0 deg

■ E5-24: Motor Induction Voltage Constant 2 (Ke)

Set the induced phase-to-phase rms voltage in units of 0.1 mV/(r/min) [mechanical angle]. Set this parameter when using an SMRA Series SPM Motor.

When E5-01 is set to FFFF, use either E5-09 or E5-24 for setting the voltage constant. This parameter is set during Parameter Auto-Tuning for PM motors.

No.	Parameter Name	Setting Range	Default
E5-24	Motor Induction Voltage Constant 2	0.0 to 6500.0 mV/(r/min)	Determined by E5-01

Note: Ensure that E5-09 = 0 when setting parameter E5-24. An alarm will be triggered, however, if both E5-09 and E5-24 are set 0, or if neither parameter is set to 0. When E5-01 = FFFF, then E5-09 = 0.0.

5.6 F: Option Settings

◆ F1: PG Speed Control Card Settings

Yaskawa offers two motor encoder PG option cards: PG-B3 and PG-X3. When using only one PG option card, use the CN5-C port. For two PG option cards, use ports CN5-C and CN5-B. When one of the multi-function input terminals has been programmed to act as a switch between two motors (H1-□□ = 16), then the card connected to port CN5-C is to be used for motor 1 while the card connected to CN5-B is for motor 2.

Table 5.34 lists the parameters that must be set for each option card port.

Table 5.34 Option Card Ports and Corresponding Parameters

Port	Parameters
CN5-C and CN5-B (common)	F1-02 to F1-04, F1-08 to F1-11, F1-14
CN5-C only	F1-01, F1-05, F1-06, F1-12, F1-13, F1-18 to F1-21
CN5-B only	F1-31 to F1-37

■ F1-01, F1-31: PG 1 and PG 2 Pulses Per Revolution

Sets the number encoder number of pulses per revolution.

No.	Parameter Name	Option Port	Setting Range	Default
F1-01	PG 1 Pulses Per Revolution	CN5-C	0 to 60000 ppr	Determined by A1-02
F1-31	PG 2 Pulses Per Revolution	CN5-B	0 to 60000 ppr	1024 ppr

■ F1-02, F1-14: PG Open (PGo) Circuit Operation Selection, Detection Time

A PGo fault is triggered if the drive receives no pulse signal for longer than the time set in F1-14. The stopping method when PGo occurs should be set to parameter F1-02.

上正科技有限公司
購買、維修 此手冊零組件
電話： 037-466333
Email: service@repairtw.com
Line id: @zzzz
www.repairtw.com

No.	Parameter Name	Option Port	Setting Range	Default
F1-02	Operation Selection at PG Open Circuit (PGo)	CN5-B, CN5-C	0 to 3	1
F1-14	PG Open-Circuit Detection Time	CN5-B, CN5-C	0.0 to 10.0 s	2.0 s

Parameter F1-02 Settings:
Setting 0: Ramp to stop (uses the deceleration time set to C1-02)
Setting 1: Coast to stop
Setting 2: Fast Stop (uses the Fast Stop time set to C1-09)
Setting 3: Alarm only
Setting 4: No alarm display

Note: Due to potential damage to motor and machinery, the “Alarm only” and “No alarm display” setting should be used only under special circumstances.

■ F1-03, F1-08, F1-09: Overspeed (oS) Operation Selection, Detection Level, Delay Time

An overspeed error (oS) is triggered when the speed feedback exceeds the value set in F1-08 for longer than the time set in F1-09. The stopping method when an overspeed fault occurs can be selected in parameter F1-03.

No.	Parameter Name	Option Port	Setting Range	Default
F1-03	Operation Selection at Overspeed (oS)	CN5-B, CN5-C	0 to 3	1
F1-08	Overspeed Detection Level	CN5-B, CN5-C	0 to 120%	115%
F1-09	Overspeed Detection Delay Time	CN5-B, CN5-C	0.0 to 2.0 s	Determined by A1-02

Parameter F1-03 Settings:
Setting 0: Ramp to stop (uses the deceleration time set to C1-02)
Setting 1: Coast to stop
Setting 2: Fast Stop (uses the Fast Stop time set to C1-09)
Setting 3: Alarm only

Note: Due to potential damage to motor and machinery, the “Alarm only” setting should be used only under special circumstances.

■ F1-04, F1-10, F1-11: Operation at Speed Deviation (dEv), Detection Level, Delay Time

A speed deviation error (dEv) is triggered when the difference between the frequency reference and the speed feedback exceeds the value set in F1-10 for longer than the time set in F1-1. The stopping method when a speed deviation fault occurs can be selected in parameter F1-04.

No.	Parameter Name	Option Port	Setting Range	Default
F1-04	Operation Selection at Deviation (dEv)	CN5-B, CN5-C	0 to 3	3
F1-10	Excessive Speed Deviation Detection Level	CN5-B, CN5-C	0 to 50%	10%
F1-11	Excessive Speed Deviation Detection Delay Time	CN5-B, CN5-C	0.0 to 10.0 s	0.5 s

Settings for Parameter F1-04:
Setting 0: Ramp to stop (uses the deceleration time set to C1-02)
Setting 1: Coast to stop
Setting 2: Fast Stop (uses the Fast Stop time set to C1-09)
Setting 3: Alarm only (drive continues operating while "dEv" flashes on the screen)

■ F1-05, F1-32: PG 1, PG 2 Rotation Selection

Determines the direction indicated by the pulses from the PG feedback encoder for motor 1 and motor 2.

See PG option card instruction manual for details on how to set the direction for the PG encoder and the motor.

No.	Parameter Name	Option Port	Setting Range	Default
F1-05	PG 1 Rotation Selection	CN5-C	0, 1	Determined by A1-02
F1-32	PG 2 Rotation Selection	CN5-B	0, 1	0

Setting 0: A pulse leads with Forward run command.
Setting 1: B pulse leads with Forward run command.

上正科技有限公司
購買、維修 此手冊零組件
電話： 037-466333
Email: service@repairtw.com
Line id: @zzzz
www.repairtw.com

■ F1-06, F1-35: PG 1, PG 2 Division Rate for PG Pulse Monitor

Sets the ratio between the pulse input and the pulse output of a PG option card as a three digit number, where the first digit (n) sets the numerator and the second and third digit (m) set the denominator as shown below:

$$f_{Pulse\ Input} = f_{Pulse\ Output} \cdot \frac{(1 + n)}{m}$$

Example: To have a ratio of 1/32 between the PG card pulse input and output, set F1-06 = 032.

No.	Parameter Name	Option Port	Setting Range	Default
F1-06	PG 1 Division Rate for PG Pulse Monitor	CN5-C	1 to 132 (1 to $\frac{1}{32}$)	1
F1-35	PG 2 Division Rate for PG Pulse Monitor	CN5-B	1 to 132 (1 to $\frac{1}{32}$)	1

■ F1-12, F1-13, F1-33, F1-34: PG 1, PG 2 Gear Teeth 1, 2 (V/f w/PG only)

Sets the gear ratio between the motor shaft and the PG encoder. F1-12 and F1-33 set the number of gear teeth on the motor side, while F1-13 and F-34 set the number of gear teeth for the load side. The drive uses the formula below to calculate the motor speed.

$$r/min = \frac{\text{Input pulses from PG} \times 60}{\text{Pulses per Rev (F1-01/31)}} \cdot \frac{\text{Load-side PG gear teeth (F1-12/33)}}{\text{Motor-side PG gear teeth (F1-13/34)}}$$

No.	Parameter Name	Option Port	Setting Range	Default
F1-12	PG 1 Gear Teeth 1	CN5-C	0 to 1000	0
F1-13	PG 1 Gear Teeth 2	CN5-C	0 to 1000	0
F1-33	PG 2 Gear Teeth 1	CN5-B	0 to 1000	0
F1-34	PG 2 Gear Teeth 2	CN5-B	0 to 1000	0

Note: A gear ratio of 1 will be used if any of these parameters is set to 0.

■ F1-18: dv3 Detection Selection (CLV/PM)

A dv3 situation is detected when the torque reference and speed reference are in opposite directions while the difference between the actual motor speed and the speed reference is greater than 30%. Parameter F1-18 sets the number of times such a situation must occur before a dv3 fault is triggered. Setting F1-18 to 0 disables dv3 detection.

No.	Parameter Name	Option Port	Setting Range	Default
F1-18	dv3 Detection Selection	CN5-B, CN5-C	0 to 10	10

Note: A common cause for a dv3 fault is the incorrect setting of E5-11. Make sure the correct Z pulse offset has been entered to E5-11.

■ F1-19: dv4 Detection Selection (CLV/PM)

A dv4 fault is triggered when there is a motor speed deviation opposite to the frequency reference and larger than the number of pulses set in F1-19. Setting F1-19 to 0 disables dv4 detection.

No.	Parameter Name	Option Port	Setting Range	Default
F1-19	dv4 Detection Selection	CN5-B, CN5-C	0 to 5000	128

Note: **1.** A common cause for a dv4 fault is the incorrect setting of E5-11. Make sure the correct Z pulse offset is set to E5-11.
2. Set F1-19 to 0 for applications where the direction of the load is the opposite of the speed reference.

■ F1-20, F1-36: PG Option Card Disconnect Detection

Sets whether the drive detects a fault or not when a PG-X3 card is disconnected.

No.	Parameter Name	Option Port	Setting Range	Default
F1-20	PG Option Card Disconnection Detection 1	CN5-C	0, 1	1
F1-36	PG Option Card Disconnection Detection 2	CN5-B	0, 1	1

[illegible]科技有限公司
購買、維修 此手冊零組件
電話： 037-466333
Email: service@repairtw.com
Line id: @zzzz
www.repairtw.com

Setting 0: Disabled
Setting 1: Enabled

■ F1-21, F1-37: PG 1, PG 2 Signal Selection (V/f w/PG only)

Determines whether the signal to the PG option card is single track or two track.

No.	Parameter Name	Option Port	Setting Range	Default
F1-21	PG 1 Signal Selection	CN5-C	0, 1	0
F1-37	PG 2 Signal Selection	CN5-B	0, 1	0

Setting 0: Single track (A track only)
Setting 1: Two track (tracks A and B)

■ F1-30: PG Option Card Port for Motor 2 Selection

Specifies the drive port for the PG option card used for motor 2. This parameter should be set when switching between motor 1 and motor 2, where both motors supply a speed feedback signal to the drive. If the same PG card is being used for feedback signals from both motors, then set F1-30 to 0. If each motor has its own PG card connected to the drive, then set F1-30 to 1.

Note: The motor 2 selection function cannot be used when PM motor is used.

No.	Parameter Name	Setting Range	Default
F1-30	PG Option Card Port for Motor 2 Selection	0, 1	1

Setting 0: CN5-C
Setting 1: CN5-B

◆ F2: Analog Input Card Settings

These parameters are used to setup the drive for operation with the analog input option card AI-A3. This section describes parameters that govern operation with an input option card. Refer to the instruction manual packaged with the option card for specific details on installation, wiring, input signal level selection, and parameter setup.

■ F2-01: Analog Input Option Card Operation Selection

Determines how the input terminals on the AI-A3 option card are to be used.

No.	Parameter Name	Setting Range	Default
F2-01	Analog Input Option Card Operation Selection	0, 1	0

Setting 0: Separate functions for each terminal (V1, V2, V3 replace terminals A1, A2, A3)

Apply this setting to replace the drive terminals A1, A2, and A3 by the option board terminals V1, V2, and V3. Functions, gain, and bias levels for an analog reference supplied by AI-A3 are set using the H3-☐☐ parameters as described in *H3-03, H3-04: Terminal A1 Gain and Bias Settings on page 234*.

Note: Parameter setting error oPE05 will occur if option card terminals are set for separate input functions (F2-01 = 0) while b1-01 = 3.

Setting 1: Combine input terminal values to create frequency reference

With this setting, all three input signals on the AI-A3 option card are added together to create the frequency reference. When the option card is the source of the frequency reference for the drive, parameter b1-01 must be set to 3. Gain and bias settings for the frequency reference supplied from AI-A3 can be set using parameters F2-02 and F2-03.

■ F2-02, F2-03: Analog Input Option Card Gain, Bias

Parameter F2-02 sets the gain and parameter F2-03 sets the bias for the AI-A3 input signal when the card is used in the combined input signals mode (F2-01 = 1). Both gain and bias are set as a percentage of the maximum output frequency.

巨匠科技有限公司
購買、維修 此手冊零組件
電話： 037-466333
Email: service@repairtw.com
Line id: @zzzz
www.repairtw.com

No.	Parameter Name	Setting Range	Default
F2-02	Analog Input Option Card Gain	-999.9 to 999.9%	100.0%
F2-03	Analog Input Option Card Bias	-999.9 to 999.9%	0.0%

Note: Enabled only when F2-01 = 1.

◆ F3: Digital Input Card Settings

These parameters set up the drive for operation with the option card DI-A3. This section describes parameters that govern operation with a digital input option card. Refer to the instruction manual packaged with the option card for specific details on installation, wiring, input signal level selection, and parameter setup.

■ F3-01: Digital Input Option Card Input Selection

Determines the type of input for digital option card DI-A3 when o1-03 is set to 0 or 1.

No.	Parameter Name	Setting Range	Default
F3-01	Digital Input Option Card Input Selection	0 to 7	0

Setting 0: BCD, 1% units
Setting 1: BCD, 0.1% units
Setting 2: BCD, 0.01% units
Setting 3: BCD, 1 Hz units
Setting 4: BCD, 0.1 Hz units
Setting 5: BCD, 0.01 Hz units
Setting 6: BCD, special setting (5 digit input), 0.02 Hz units
Setting 7: Binary

Note: BCD input when o1-03 = 2 or 3. Units are determined by o1-03.

■ F3-03: Digital Input Option DI-A3 Data Length Selection

Determines the number of bits for the option card input that sets the frequency reference.

No.	Parameter Name	Setting Range	Default
F3-03	Digital Input Option DI-A3 Data Length Selection	0 to 2	2

Setting 0: 8 bit
Setting 1: 12 bit
Setting 2: 16 bit

◆ F4: Analog Monitor Card Settings

These parameters set up the drive for operation with the analog output option card AO-A3. This section describes parameters that govern operation with an analog output option card. Refer to the instruction manual packaged with the option card for specific details on installation, wiring, input signal level selection, and parameter setup.

■ F4-01, F4-03: Terminal V1, V2 Monitor Selection

Selects the data to output from analog terminal V1. Enter the final three digits of U□-□□ to determine which monitor data is output from the option card. Some monitors are only available in certain control modes.

No.	Parameter Name	Setting Range	Default
F4-01	Terminal V1 Monitor Selection	000 to 999	102
F4-03	Terminal V2 Monitor Selection	000 to 999	103

■ F4-02, F4-04, F4-05, F4-06: Terminal V1, V2 Monitor Gain and Bias

上正科技有限公司
購買、維修 此手冊零組件
電話： 037-466333
Email: service@repairtw.com
Line id: @zzzz
www.repairtw.com

Parameters F4-02 and F4-04 determine the gain, while parameters F4-05 and F4-06 set the bias. These parameters are set as a percentage of the output signal from V1 and V2 where 100% equals 10 V output. The terminal output voltage is limited to 10 V.

No.	Parameter Name	Setting Range	Default
F4-02	Terminal V1 Monitor Gain	-999.9 to 999.9%	100.0%
F4-04	Terminal V2 Monitor Gain	-999.9 to 999.9%	50.0%
F4-05	Terminal V1 Monitor Bias	-999.9 to 999.9%	0.0%
F4-06	Terminal V2 Monitor Bias	-999.9 to 999.9%	0.0%

Using Gain and Bias to Adjust Output Signal Level

When viewing the values set to F4-02 or F4-05 on the digital operator, a voltage equal to 100% of the parameter being viewed (including current gain and bias settings) will be output from terminal V1 or V2. When viewing the value set to F4-05 or F4-06, terminal V1 or V2 will output a voltage equal to 0% of the parameter being viewed (including current gain and bias settings).

Example 1: F4-02 = 0%, F4-02 = 80%. When the parameter setting display for F4-02 is accessed using the digital operator, terminal V1 will output a voltage of 8 V, even when the drive is stopped.

Example 2: F4-03 = 5%. When the parameter setting display for F4-03 is accessed using the digital operator, terminal V1 will output a voltage of 0.5 V, even when the drive is stopped.

■ F4-07, F4-08: Terminal V1, V2 Signal Level

Sets the output signal level for terminals V1 and V2.

No.	Parameter Name	Setting Range	Default
F4-07	Terminal V1 Signal Level	0, 1	0
F4-08	Terminal V2 Signal Level	0, 1	0

Setting 0: 0 to 10 V
Setting 1: -10 to 10 V

◆ F5: Digital Output Card Settings

These parameters set up the drive for operation with the digital output option card DO-A3. This section describes parameters that govern operation with a digital output option card. Refer to the instruction manual packaged with the option card for specific details on installation, wiring, input signal level selection, and parameter setup.

■ F5-01 through F5-08: Digital Output Option Card Terminal Function Selection

When F5-09 = 2, the parameters listed in the table below are used to assign functions to the output terminals on the option card.

No.	Name	Setting Range	Default
F5-01	Terminal P1-PC Output Selection	0 to 192	2: Speed agree
F5-02	Terminal P2-PC Output Selection	0 to 192	4: Frequency detection 1
F5-03	Terminal P3-PC Output Selection	0 to 192	6: Drive ready
F5-04	Terminal P4-PC Output Selection	0 to 192	37: During frequency output
F5-05	Terminal P5-PC Output Selection	0 to 192	F: Not used
F5-06	Terminal P6-PC Output Selection	0 to 192	F: Not used
F5-07	Terminal M1-M2 Output Selection	0 to 192	0: During run
F5-08	Terminal M3-M4 Output Selection	0 to 192	1: Zero speed

■ F5-09: DO-A3 Output Mode Selection

Determines how the DO-A3 option card is to work with the drive.

No.	Parameter Name	Setting Range	Default
F5-09	DO-A3 Output Mode Selection	0 to 2	0

Setting 0: Separate output functions for each of 8 terminals
Setting 1: Binary output
Setting 2: Output functions assigned by F5-01 through F5-08

上正科技有限公司
購買、維修 此手冊零組件
電話： 037-466333
Email: service@repairtw.com
Line Id: @2222
www.repairtw.com

◆ F6: Communication Option Card

These parameters are to configure communication option cards and communication fault detection methods.

Some parameters apply to all communication option cards, while some parameters are used only for certain network options.

Parameter	Communication Protocol				
	CC-Link	MECHATROLINK-II	PROFIBUS-DP	CANopen	DeviceNet
F6-01 to F6-03, F6-06 to F6-08	○	○	○	○	○
F6-04, -10, -11, -14	○	–	–	–	–
F6-20 to F6-26	–	○	–	–	–
F6-30 to F6-32	–	–	○	–	–
F6-35 to F6-36	–	–	–	○	–
F6-50 to F6-63	–	–	–	–	○

■ F6-01: Communications Error Operation Selection

Determines drive operation if a communication error occurs.

No.	Parameter Name	Setting Range	Default
F6-01	Communications Error Operation Selection	0 to 3	1

Setting 0: Ramp to stop (uses the deceleration time set to C1-02)
Setting 1: Coast to stop
Setting 2: Fast Stop (uses the Fast Stop time set to C1-09)
Setting 3: Alarm only (continue operation)

■ F6-02: External Fault from Comm. Option Detection Selection

Determines the detection method of an external fault initiated by a communication option (EF0).

No.	Parameter Name	Setting Range	Default
F6-02	External Fault from Comm. Option Detection Selection	0 or 1	0

Setting 0: Always detected
Setting 1: Detection during run only

■ F6-03: External Fault from Comm. Option Operation Selection

Determines the operation when an external fault is initiated by a communication option (EF0).

No.	Parameter Name	Setting Range	Default
F6-03	External Fault from Comm. Option Operation Selection	0 to 3	1

Setting 0: Ramp to stop
Setting 1: Coast to stop
Setting 2: Fast Stop
Setting 3: Alarm only (continue operation)

■ F6-06: Torque Reference / Torque Limit Selection from Comm. Option

Used to select if torque reference and torque limit values are assigned to the drive from the network.

No.	Parameter Name	Setting Range	Default
F6-06	Torque Reference / Torque Limit Selection from Comm. Option	0, 1	0

Setting 0: Enabled
Setting 1: Disabled

原廠維修公司
購買、維修 此手冊零組件
電話： 037-466333
Email: service@repairtw.com
Line id: @zzzz
www.repairtw.com

■ F6-07: Multi-Step Speed Enable/Disable when NetRef/ComRef is Selected

Selects how multi-step speed inputs are treated when the NetRef command is set.

No.	Parameter Name	Setting Range	Default
F6-07	NetRef/ComRef Function Selection	0, 1	0

Setting 0: Multi-step speed operation disabled

If the NetRef command is selected, multi-step speed input frequency references are disabled.

Setting 1: Multi-step speed operation enabled

Even if the NetRef command is selected, multi-step speed inputs are still active and can override the frequency reference from the communications option .

■ F6-08: Reset Communication Parameters

Determines whether communication-related parameters (F6-☐☐) are reset when the drive is initialized using parameter A1-03.

No.	Parameter Name	Setting Range	Default
F6-08	Reset Communication Parameters	0, 1	0

Setting 0: Do not reset parameters F6-☐☐ when the drive is initialized with A1-03
Setting 1: Reset F6-☐☐ when the drive is initialized with A1-03

Note: F6-08 is not reset when the drive is initialized, but does determine whether initializing the drive with A1-03 resets the other communication parameters, F6-☐☐.

◆ CC-Link Parameters

Parameters F6-04, F6-10, F6-11, and F6-14 set up the drive to operate on a CC-Link network.

For details on parameter settings, refer to the YASKAWA AC Drive-Option Card CC-Link Installation Manual and Technical Manual.

◆ MECHATROLINK Parameters

Parameters F6-20 through F6-26 set up the drive to operate on a MECHATROLINK network.

For details on parameter settings, refer to the YASKAWA AC Drive-Option Card MECHATROLINK-II Installation Manual and Technical Manual.

◆ PROFIBUS-DP Parameters

Parameters F6-30 through F6-32 set up the drive to operate on a PROFIBUS-DP network.

For details on parameter settings, refer to the YASKAWA AC Drive-Option Card PROFIBUS-DP Installation Manual and Technical Manual.

◆ CANopen Parameters

Parameters F6-35 and F6-36 set up the drive to operate on a CANopen network.

For details on parameter settings, refer to the YASKAWA AC Drive-Option Card CANopen Installation Manual and Technical Manual.

上正科技有限公司
購買、維修 此手冊零組件
電話： 037-466333
Email: service@repairtw.com
Line id: @zzzz
www.repairtw.com

◆ DeviceNet Parameters

Parameters F6-50 through F6-63 set up the drive to operate on a DeviceNet network.

For details on parameter settings, refer to the YASKAWA AC Drive-Option Card DeviceNet Installation Manual and Technical Manual.

5.7 H: Terminal Functions

H parameters are used to assign functions to the external terminals.

◆ H1: Multi-Function Digital Inputs

■ H1-01 to H1-08: Functions for Terminals S1 to S8

These parameters assign functions to the multi-function digital inputs. The various functions and their settings are listed below in *Table 5.35*.

No.	Parameter Name	Setting Range	Default
H1-01	Multi-Function Digital Input Terminal S1 Function Selection	1 to 9F	40 (F) <1>: Forward Run Command (2-wire sequence)
H1-02	Multi-Function Digital Input Terminal S2 Function Selection	1 to 9F	41 (F) <1>: Reverse Run Command (2-wire sequence)
H1-03	Multi-Function Digital Input Terminal S3 Function Selection	0 to 9F	24: External Fault
H1-04	Multi-Function Digital Input Terminal S4 Function Selection	0 to 9F	14: Fault Reset
H1-05	Multi-Function Digital Input Terminal S5 Function Selection	0 to 9F	3 (0) <1>: Multi-Step Speed Reference 1
H1-06	Multi-Function Digital Input Terminal S6 Function Selection	0 to 9F	4 (3) <1>: Multi-Step Speed Reference 2
H1-07	Multi-Function Digital Input Terminal S7 Function Selection	0 to 9F	6 (4) <1>: Jog Reference Selection
H1-08	Multi-Function Digital Input Terminal S8 Function Selection	0 to 9F	8: External Baseblock Command

<1> Number appearing in parenthesis is the default value after performing a 3-Wire initialization.

Table 5.35 Multi-Function Digital Input Terminal Settings

Setting	Function	Page	Setting	Function	Page
0	3-wire sequence	215	34	PID soft starter cancel	221
1	Local/remote selection	215	35	PID input level selection	221
2	External reference 1/2 selection	216	40	Forward run command (2-wire sequence)	221
3	Multi-Step Speed Reference 1	216	41	Reverse run command (2-wire sequence)	
4	Multi-Step Speed Reference 2		42	Run command (2-wire sequence 2)	221
5	Multi-Step Speed Reference 3		43	FWD/REV command (2-wire sequence 2)	
6	Jog reference selection	216	44	Offset frequency 1	221
7	Accel/decel time selection 1	216	45	Offset frequency 2	
8	Baseblock command (N.O.)	216	46	Offset frequency 3	
9	Baseblock Command (N.C.)		47	Node setup	221
A	Accel/decel ramp hold	216	60	DC Injection Braking command	222
B	Drive overheat alarm (OH2)	217	61	External Speed Search command 1	222
C	Analog terminal input selection	217	62	External Speed Search command 2	222
D	PG encoder disable	217	63	Field Weakening	222
E	ASR integral reset	217	65	KEB Ride-Thru 1 (N.C.)	222
F	Through mode	217	66	KEB Ride-Thru 1 (N.O.)	
10	Up command	217	67	Communications test mode	222
11	Down command		68	High Slip Braking	222
12	Forward jog	218	6A	Drive enabled	222
13	Reverse jog		71	Speed/Torque Control switch	223
14	Fault reset	218	72	Zero Servo	223
15	Fast Stop (N.O.)	218	75	Up 2 command	223
16	Motor 2 selection	219	76	Down 2 command	
17	Fast Stop (N.C.)	218	77	ASR gain switch	223
18	Timer function input	219	78	External torque reference polarity inversion	223
19	PID disable	219	7A	KEB Ride-Thru 2 (N.C.)	224
1A	Accel/decel time selection 2	220	7B	KEB Ride-Thru 2 (N.O.)	
1B	Program lockout	220	7C	Short Circuit Braking (N.O.)	224
1E	Reference sample hold	220	7D	Short Circuit Braking (N.C.)	
20 to 2F	External fault	220	7E	Forward/reverse detection (V/f control with simple PG)	224
30	PID integral reset	221	7F	Bi-directional PID output enable	224
31	PID integral hold	221	90 to 97	DriveWorksEZ Digital input 1 to 8	224
32	Multi-step speed reference 4	221	9F	DriveWorksEZ disabled	224

上正科技有限公司
購買、維修 此手冊零組件
電話： 037-466333
Email: service@repairtw.com
Line id: @zzzz
www.repairtw.com

Setting 0: 3-Wire Sequence

When one of the digital inputs is programmed for 3-wire control, that input becomes a forward/reverse directional input, S1 becomes the Run command input, and S2 becomes the Stop command input.

The drive will start the motor when the input S1 set for the Run command is closed for longer than 2 ms. The drive will stop the operation when the Stop input S2 is released for a brief moment. Whenever the input programmed for 3 wire sequence is open, the drive will be set for forward direction. If the input is closed, the drive is set for reverse direction.

Note: When 3-wire sequence is selected, the Run and Stop commands must be input via S1 and S2.

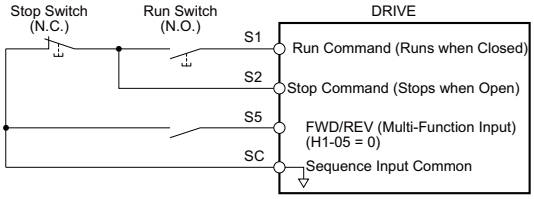

Figure 5.55 3-Wire Sequence Wiring Diagram

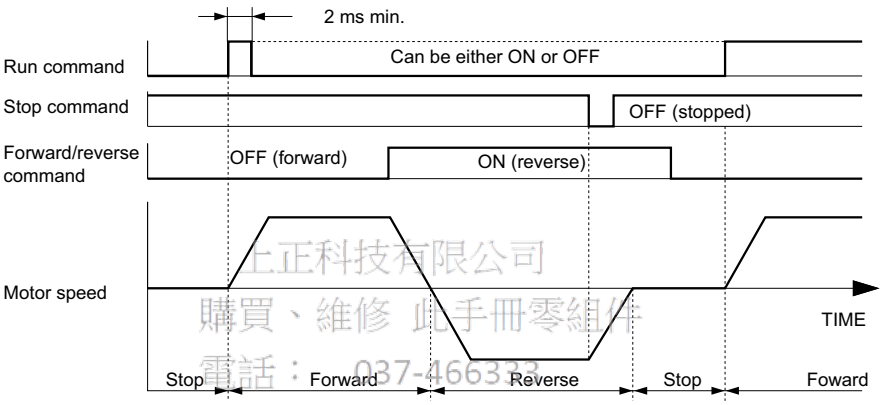

Figure 5.56 3-Wire Sequence

上正科技有限公司
購買、維修 此手冊零組件
電話：037-466333
Email: service@repairtw.com
Line id: @zzz
www.repairtw.com

Note: 1. The Run command must be closed for more than 2 ms.
2. If the Run command is active at power up and b1-17 = 0 (Run command at power up not accepted), the Run LED will flash to indicate that protective functions are operating. If required by the application, set b1-17 to 1 to have the Run command issued automatically as soon as the drive is powered up.

WARNING! *Sudden Movement Hazard. Ensure start/stop and safety circuits are wired properly and in the correct state before energizing the drive. Failure to comply could result in death or serious injury from moving equipment.*

WARNING! *The drive may start unexpectedly in reverse direction after power up if it is wired for 3-wire sequence but set up for 2-wire sequence (default). Make sure b1-17 is set to "0" (drive does not accept a Run command active at power up). When initializing the drive use 3-wire initialization. Failure to comply could result in death or serious injury from moving equipment.*

Setting 1: LOCAL/REMOTE selection

This setting allows the input terminal to determine if the drive will run in LOCAL mode or REMOTE mode.

Status	Description
Closed	LOCAL: Frequency reference and Run command are input from the digital operator.
Open	REMOTE: Frequency reference and Run command are input from the external reference that has been selected. If a digital input set to H1-□□ = 2 is active, they will be read from external reference source 2 (b1-15 and b1-16). Otherwise they will be read from external reference source 1 (b1-01 and b1-02).

Note: 1. If one of the multi-function input terminals is set to for LOCAL/REMOTE, then the LO/RE key on the operator will be disabled.
2. When the drive is set to LOCAL, the LO/RE LED will light.
3. The default setting of the drive is not to allow switching between LOCAL and REMOTE during run. To allow the drive to switch between LOCAL and REMOTE during run, ***Refer to b1-07: LOCAL/REMOTE Run Selection on page 142***.

Setting 2: External reference 1/2 selection

This function can be used to switch the Run command and frequency reference source between External reference 1 and 2 if the drive is in the REMOTE mode.

Status	Description
Open	External reference 1 is used (defined by parameters b1-01 and b1-02)
Closed	External reference 2 is used (defined by parameters b1-15 and b1-16)

Note: With default settings the drive is not to allow switching between External reference 1 and 2 during run. ***Refer to b1-07: LOCAL/ REMOTE Run Selection on page 142*** if this feature is required by the application.

Setting 3 to 5: Multi-Step Speed Reference 1 to 3

Used to switch multi-step speed frequency references d1-01 to d1-08 by digital inputs. Refer to ***d1: Frequency Reference on page 180*** for details.

Setting 6: Jog reference selection

The Jog frequency set in parameter d1-17 becomes the frequency reference when the input terminal closes. Refer to ***d1: Frequency Reference on page 180*** for details.

Setting 7: Accel/decel time selection 1

Used to switch between accel/decel times 1 (C1-01 and C1-02) and 2 (C1-03 and C1-04). ***Refer to C1-01 to C1-08: Accel, Decel Times 1 to 4 on page 165*** for details.

Setting 8, 9: Baseblock command (N.O., N.C.)

When the drive receives a Baseblock command, the output transistor stop switching and the motor coasts to stop. During this time, the alarm “bb” will flash on the digital operator to indicate baseblock. When baseblock ends and a Run command is active, the drive performs Speed Search to get the motor running again.

上正科技有限公司
購買、維修 此手冊零組件
電話： 037-466333
Email: service@repairtw.com
Line id: @szw
www.repairtw.com

DIgital Input Function	Drive Operation	
	Input Open	Input Closed
Setting 8 (N.C.)	Baseblock (Interrupt output)	Normal operation
Setting 9 (N.O.)	Normal operation	Baseblock (Interrupt output)

NOTICE: *If using baseblock in hoist applications, make sure the brake closes when the drive output is cut off by a Baseblock command triggered via one of the input terminals. Failure to do so will result in the motor suddenly coasting when the Baseblock command is entered, causing the load to slip.*

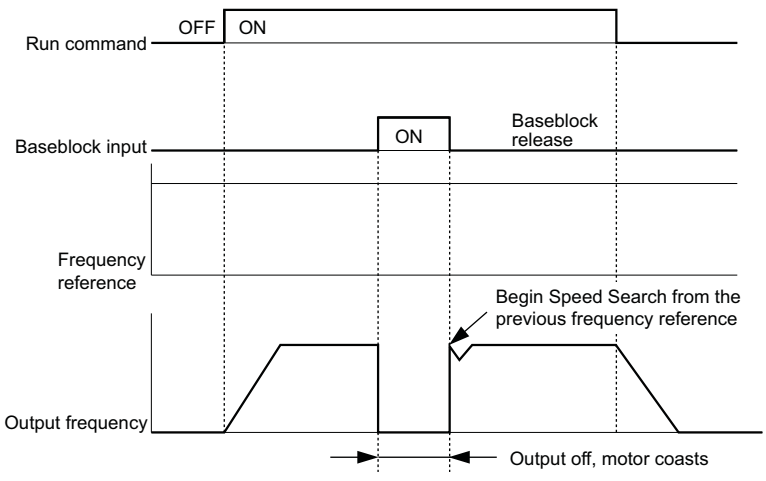

Figure 5.57 Baseblock Operation During Run

Setting A: Accel/decel ramp hold

When the digital input programmed for the Accel/decel ramp hold function closes, the drive will lock (“hold”) the output frequency. Acceleration or deceleration will resume once the input is opened again.

If the Accel/decel ramp hold function is enabled (d4-01 = 1), the drive will save the output frequency to memory whenever the Ramp Hold input is closed. When the drive is restarted after stop or after power supply interruption, the output frequency that was saved will become the frequency reference (provided that the Accel/decel ramp hold input is still closed). ***Refer to d4-01: Frequency Reference Hold Function Selection on page 183*** for details.

Setting B: Drive overheat alarm (oH2)

Triggers an oH2 alarm when the contact closes. Because this is an alarm, drive operation is not affected.

Setting C: Analog terminal input selection (terminal A1, A2, A3)

When closed, the terminals specified in H3-14 are enabled. When open, the drive disregards the input signal to the analog terminals.

Setting D: PG encoder disable

When closed the drive disregards PG feedback from the motor when using V/f Control with PG. When the terminal is opened again, the drive resumes using PG feedback to control motor speed.

Setting E: ASR integral reset

Switches between PI control or simply P control by resetting the integral value. As long as the terminal is closed, integral operation is disabled and the drive uses P control. When the terminal opens, PI control resumes.

Setting F: Through mode

Select this setting when using the terminal in a pass-through mode. When set to F, an input does not trigger any function in the drive. Setting F, however, still allows the input status to be read out by a PLC via a communication option or MEMOBUS/Modbus communications.

Setting 10, 11: Up, Down command

Using the Up/Down function allows the frequency reference to be set by two push buttons. One digital input must be programmed as the Up input (H1-☐☐= 10) to increase the frequency reference, and the other one must be programmed as the Down input (H1-☐☐= 11) to decrease the frequency reference.

The Up/Down function has priority over the frequency references from the digital operator, the analog inputs, and the pulse input (b1-01 = 0, 1, 4). If the Up/Down function is used, then references provided by these sources will be disregarded.

上豐科技有限公司
購買、維修 此手冊零組件
電話： 037-466333
Email: service@repairtw.com
Line id: @zzzz
www.repairtw.com

The inputs operate as shown in the table below.

Status		Drive Operation
Up (10)	Down (11)	
Open	Open	Hold current frequency reference
Closed	Open	Increase frequency reference
Open	Closed	Decrease frequency reference
Closed	Closed	Hold current frequency reference

Note:
1. An oPE03 alarm will occur when only one of the functions Up/Down is programmed for a digital input.
2. An oPE03 alarm will occur if the Up/Down function is assigned to the terminals while another input is programmed for the Accel/decel ramp hold function. For more information on alarms, *Refer to Drive Alarms, Faults, and Errors on page 300*.
3. The Up/Down function can only be used for External reference 1. Consider this when using Up/Down and the external reference switching command (H1-☐☐ = 2).

Using the Up/Down Function with Frequency Reference Hold (d4-01)

- When the frequency reference hold function is disabled (d4-01 = 0), the Up/Down frequency reference will be reset to 0 when the Run command is cleared or the power is cycled.
- When d4-01 = 1, the drive will save the frequency reference set by the Up/Down function. When the Run command or the power is cycled, the drive will restart with the reference value that was saved. The value that was saved can be reset by closing either the Up or Down input without having a Run command active. ***Refer to d4-01: Frequency Reference Hold Function Selection on page 183***.

Using the Up/Down Function with Frequency Reference Limits

The upper frequency reference limit is determined by parameter d2-01.

The value for the lower frequency reference limit depends on the setting of parameter d4-10, and can be set by an analog input or parameter d2-02. ***Refer to d4-10: Up/Down Frequency Reference Limit Selection on page 187*** for details. When a Run command is applied, the lower limits work as follows:

- If the lower limit is set by d2-02 only, the drive will accelerate to this limit as soon as a Run command is entered.
- If the lower limit is determined by an analog input only, the drive will accelerate to the limit as long as the Run command and an Up or Down command are active. It will not start running if only the Run command is on.

- If the lower limit is set by both an analog input and d2-02, and the analog limit is higher than the d2-02 value, then the drive will accelerate to the d2-02 value when a Run command is input. Once the d2-02 value is reached, it will continue acceleration to the analog limit only if an Up or Down command is set.

Figure 5.58 shows an Up/Down function example with a lower frequency reference limit set by d2-02, and the frequency reference hold function both enabled and disabled.

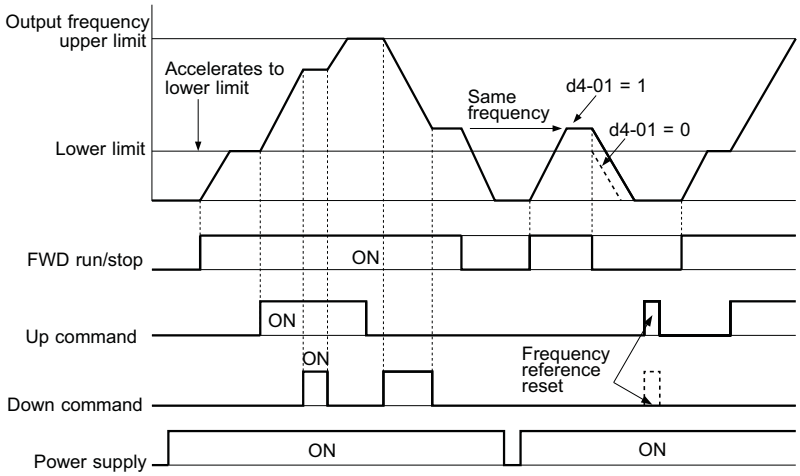

Figure 5.58 Up/Down Command Operation

Setting 12, 13: Forward Jog, Reverse Jog

Digital inputs programmed as Forward Jog (H1-□□ = 12) and Reverse Jog (H1-□□ = 13) will be Jog inputs that do not require a Run command. Closing the terminal set for Forward Jog input will cause the drive to ramp to the Jog frequency reference (d1-17) in the forward direction. The Reverse Jog will cause the same action in the reverse direction. The Forward Jog and Reverse Jog command can be set independently.

上正科技有限公司
購買、維修 此手冊零組件
電話： 037-466333
Email: service@repairtw.com
Line id: @zzzz
www.repairtw.com

Note: The Forward Jog and Reverse Jog commands override all other frequency references. However, if the drive is set to prohibit reverse rotation (b1-04 = 1), then activating Reverse Jog will have no effect. If both the Forward Jog and Reverse Jog are input simultaneously for 500 ms or more, an alarm will occur and the drive will ramp to stop.

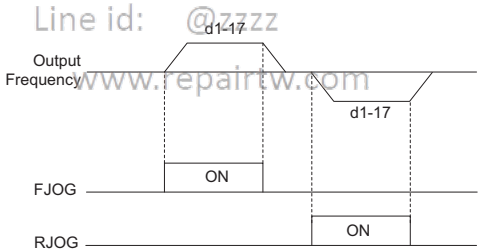

Figure 5.59 FJOG/RJOG Operation

Setting 14: Fault reset

Whenever the drive detects a fault condition, the fault output contact will close and the drive's output will shut off. The motor then coasts to stop (specific stopping methods can be selected for some faults such as L1-04 for motor overheat). Once the Run command is removed, the fault can be cleared by either the RESET key on the digital operator or by closing a digital input configured as a Fault Reset (H1-□□ = 14).

Note: Fault Reset commands are ignored as long as the Run command is present. To reset a fault, first remove the Run command.

Setting 15, 17: Fast Stop (N.O., N.C.)

The Fast Stop function operates much like an emergency stop input to the drive. If a Fast Stop command is input while the drive is running, the drive will decelerate to a stop by the deceleration time set to C1-09 (***Refer to C1-09: Fast Stop Time on page 166***). The drive can only be restarted after is has come to a complete stop, the Fast Stop input is off, and the Run command has been switched off.

- To trigger the Fast Stop function with a N.O. switch, set H1-□□ = 15.
- To trigger the Fast Stop function with a N.C. switch, set H1-□□ = 17.

Figure 5.60 shows an operation example of Fast Stop.

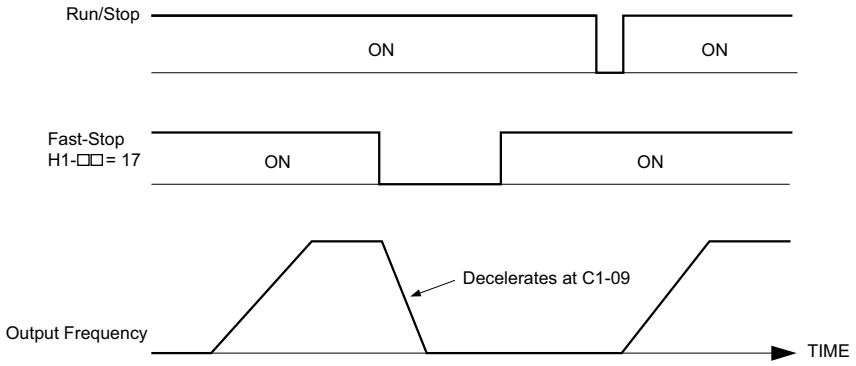

Figure 5.60 Fast Stop Sequence

NOTICE: *Rapid deceleration can trigger an overvoltage fault. When faulted, the drive output shuts off, and the motor coasts. To avoid this uncontrolled motor state and to ensure that the motor stops quickly and safely, set an appropriate Fast Stop time to C1-09.*

Setting 16: Motor 2 selection

The drive has the capability to control two induction motors independently. A second motor may be selected using a multi-function digital input as shown in *Figure 5.61*.

Note: The motor 2 selection function cannot be used when PM motor is used.

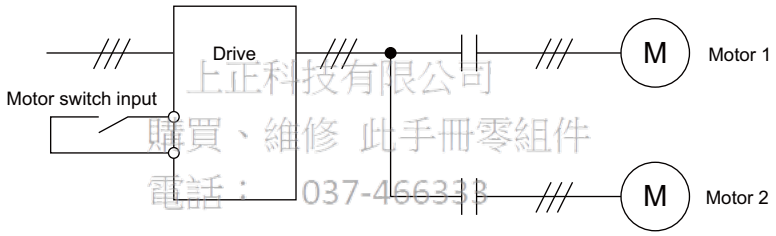

上正科技有限公司
購買、維修 此手冊零組件
電話： 037-466338
Email service@repairtw.com
Line id: @2222
www.repairtw.com

Figure 5.61 Motor Selection

When switching between motor 1 and motor 2, the parameters used to control those motors also change. Below, *Table 5.36* lists the parameters that correspond to each motor.

Table 5.36 Parameters for Switching Between Two Motors

No.	Setting 16 Open (Motor 1)	⇒	Setting 16 Closed (Motor 2)
C1-□□: Acceleration/Deceleration Time	C1-01 to C1-04	⇒	C1-05 to C1-08
C3-□□: Motor Slip Compensation	C3-01 to C3-04, C3-15	⇒	C3-21 to C3-25
C4-□□: Motor Torque Compensation	C4-01	⇒	C4-07
C5-□□: Speed Control (ASR)	C5-01 to C5-08, C5-12, C5-15, C5-17, C5-18	⇒	C5-21 to C5-28, C5-32, C5-35, C5-37, C5-38
E1-□□, E3-□□: V/f Pattern E2-□□, E4-□□: Motor Parameters	E1-□□, E2-□□	⇒	E3-□□ to E4-□□
F1-□□ (PG Constant)	F1-01 to F1-21	⇒	F1-02 to F1-04, F1-08 to F1-11, F1-14, F1-31 to F1-37

Note:
1. When using 2 motors, the motor overload protection selection (oL1) set to L1-01 applies to both motor 1 and motor 2.
2. It is not possible to switch between motor 1 and motor 2 during run. Doing so will trigger the “rUn” alarm.
3. There is a 500 ms delay when switching between motors equipped with a PG encoder for feedback.
4. The motor 2 selection function cannot be used when PM motor is used.

If a digital output is programmed for “Motor 2 selection” (H1-01, H1-02, or H1-03 = 1C), motor will be selected when the output is closed.

Setting 18: Timer function input

This setting configures a digital input terminal as the input for the timer function. Use this setting combination with the timer function output (H2-□□ = 12). *Refer to b4: Delay Timers on page 151* for details.

Setting 19: PID disable

When the PID function has been enabled by parameter b5-01, it can be indefinitely disabled by closing a digital input. When the input is released, the drive resumes PID operation. Also refer to *PID Block Diagram on page 154*.

Setting 1A: Accel/decel time selection 2

Used to select accel/decel times 1 to 4 in combination with the Accel/decel time selection 1 command. *Refer to C1-01 to C1-08: Accel, Decel Times 1 to 4 on page 165* for details.

Setting 1B: Program lockout

When an input is programmed for Program Lockout, parameters values cannot be changed as long as this input is open (it is still possible to view and monitor parameter settings).

Setting 1E: Reference sample hold

This function allows the user to sample an analog frequency reference signal being input to terminal A1, A2, or A3 and hold the frequency reference at the sampled level. Once the Analog Frequency Reference Sample/Hold function is held for at least 100 ms, the drive reads the analog input and changes the frequency reference to the newly sampled speed as illustrated in *Figure 5.62*.

When the power is shut off and the sampled analog frequency reference is cleared, the frequency reference is reset to 0.

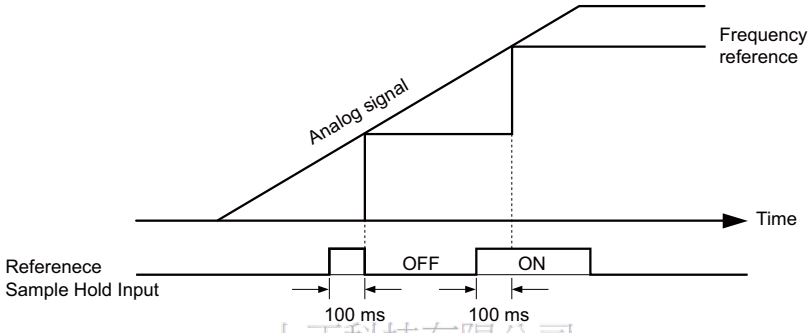

Figure 5.62 Analog Frequency Reference Sample/Hold

上正科技有限公司
購買、維修此手冊零組件
電話： 037-466333
Email: service@repairtw.com
Line id: @zzzz
www.repairtw.com

An oPE03 error will occur when one of the following functions is used simultaneously with the Analog frequency reference sample/hold command.

- Hold accel/decel stop (setting: A)
- Up command, Down command (setting: 10, 11)
- Offset frequency (setting: 44 to 46)
- Up or Down functions (setting: 75, 76)

Setting 20 to 2F: External fault

By using the External fault command, the drive can be stopped when problems occur with external devices.

To use the External fault command, set one of the multi-function digital inputs to any value between 20 to 2F. The digital operator will display EF☐ where ☐ is the number of the terminal to which the external fault signal is assigned.

For example, if an external fault signal is input to terminal S3, “EF3” will be displayed.

Select the value to be set in H1-☐☐ from a combination of any of the following three conditions:

- Signal input level from peripheral devices (N.O., N.C.)
- External fault detection method
- Operation after external fault detection

The following table shows the relationship between the conditions and the value set to H1-☐☐:

Setting	Terminal Status <1>		Detection Conditions <2>		Stopping Method			
	N.O.	N.C.	Always Detected	Detected during Run only	Ramp to Stop (fault)	Coast to Stop (fault)	Fast Stop (fault)	Alarm Only (continue running)
20	O		O		O			
21		O	O		O			
22	O			O	O			
23		O		O	O			
24	O		O			O		
25		O	O			O		
26	O			O		O		
27		O		O		O		
28	O		O				O	
29		O	O				O	

Setting	Terminal Status <1>		Detection Conditions <2>		Stopping Method			
	N.O.	N.C.	Always Detected	Detected during Run only	Ramp to Stop (fault)	Coast to Stop (fault)	Fast Stop (fault)	Alarm Only (continue running)
2A	O			O			O	
2B		O		O			O	
2C	O		O					O
2D		O	O					O
2E	O			O				O
2F		O		O				O

<1> Determine the terminal status for each fault, i.e., whether the terminal is normally open or normally closed.
<2> Determine whether detection for each fault should be enabled only during run or always detected.

Setting 30: PID integral reset

By configuring one of the digital inputs for PID integral reset (H1-☐☐ = 30), the value of the integral component in PID control will be reset to 0 whenever the terminal is closed. *Refer to PID Block Diagram on page 154* for more details.

Setting 31: PID integral hold

By configuring a digital input for Integral Hold (H1-0☐ = 31), the value of the integral component of the PID control is locked as long as the input is active. The PID controller resumes integral operation from the hold value as soon as the integral hold input is released. *Refer to PID Block Diagram on page 154* for more information on this function.

Setting 32: Multi-Step Speed Reference 4

Used to select the multi-step speeds d1-09 to d1-16 in combination with the input terminal set for Multi-Step Speed 1, 2 and 3. *Refer to d1-01 to d1-17: Frequency Reference 1 to 16 and Jog Frequency Reference on page 180*.

Setting 34: PID soft starter cancel

A digital input configured as a PID soft starter cancel input (H1-0☐ = 34) can be used to enable or disable the PID soft starter and thereby canceling the PID accel/decel time (b5-17). *Refer to PID Block Diagram on page 154*.

Setting 35: PID input level selection

Allows and input terminal to switch the sign of the PID input. *Refer to PID Block Diagram on page 154* for details.

Setting 40, 41: Forward run, Reverse run command for 2-wire sequence

Configures the drive for a 2-wire sequence.

When an input terminal set to 40 closes, the drive operates in the forward direction. When an input set for 41 closes, the drive will operate in reverse. Closing both inputs at the same time will result in an external fault.

Note: **1.** This function cannot be used simultaneously with settings 42 and 43.
2. The same functions are assigned to terminals S1 and S2 when the drive is initialized for 2-wire sequence.

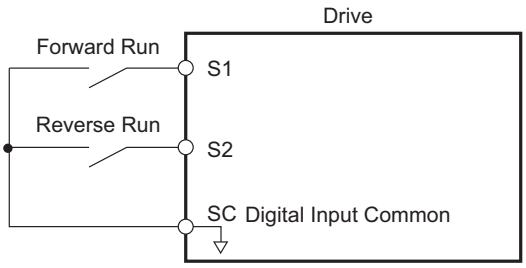

Figure 5.63 Example Wiring Diagram for 2-Wire Sequence

Setting 42, 43: Run and direction command for 2-wire sequence 2

Sets the drive for 2-wire sequence 2.

When an input terminal programmed for 42 is closed, the drive will operate in the direction selected. When the input opens, the drive will stop. The input programmed for 43 selects the direction. If it is open, forward direction is selected. If it is closed, reverse direction is selected.

Note: This function cannot be used simultaneously with settings 40 and 41.

Setting 44, 45, 46: Offset frequency 1, 2, 3

These inputs can be used to add offset frequencies d7-01, d7-02, and d7-03 to the frequency reference. *Refer to d7-01 to d7-03: Offset Frequency 1 to 3 on page 193* for details.

正正科技有限公司
購買、維修 此手冊零組件
電話： 037-466333
Email: service@repairtw.com
Line Id: @zzz
www.repairtw.com

Setting 47: Node setup

If the SI-S3 option card is connected, closing this terminal will set a node address for operation on a CANopen network.

Setting 60: DC Injection Braking command

When a DC Injection Braking command is input while the drive is stopped, DC Injection Braking operation is activated. When a Run command or a Jog command is input, DC Injection Braking is released. *Refer to b2: DC Injection Braking and Short Circuit Braking on page 144* for details on setting up the DC Injection Braking function.

The diagram below illustrates how the DC Injection Braking function works.

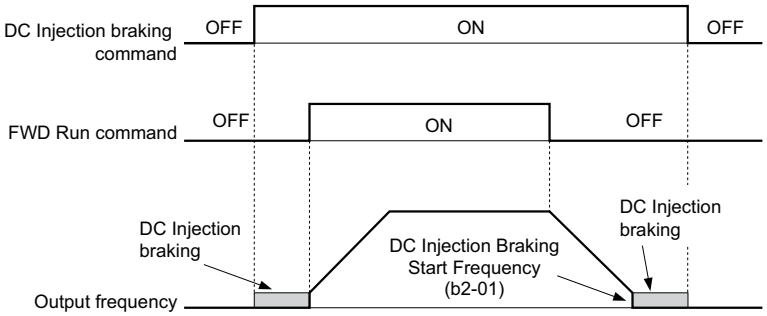

Figure 5.64 DC Injection Braking Input Timing Diagram

Setting 61, 62: External Speed Search command 1, 2

These input functions can be used to enable Speed Search even if parameter b3-01 = 0 (no Speed Search at start). *Refer to Activating of Speed Search on page 149* for details on how to use the input signals. *Refer to b3: Speed Search on page 146* for more about Speed Search.

上正科技有限公司
購買、維修 此手冊零組件
電話： 037-466333
Email: service@repairtw.com
Line id: @zzzz
www.repairtw.com

Note: Operator error oPE03 will result if both Speed Search 1 and Speed Search 2 are set to the input terminals at the same time.

Setting 63: Field Weakening

Enabled in V/f Control. When closed, Field Weakening is performed. For details, *Refer to d6: Field Weakening and Field Forcing on page 192*.

Setting 65, 66: KEB Ride-Thru 1 (N.C.), 2 (N.O.)

Used to enable the KEB Ride-Thru function selected in parameter L2-29. *Refer to KEB Ride-Thru Function on page 249* for more information on this function.

DIgital Input Function	Drive Operation	
	Input Open	Input Closed
Setting 65 (N.C.)	KEB Ride-Thru Deceleration	Normal operation
Setting 66 (N.O.)	Normal operation	KEB Ride-Thru Deceleration

Note: Both KEB Ride-Thru 1 and 2 cannot be assigned to the input terminals at the same time. This will trigger setting error oPE03.

Setting 67: Communication test mode

The drive has a built-in function for self-diagnosing serial communications operation. The test involves wiring the send and receive terminals of the RS-485/422 port together. The drive transmits data and then confirms that the communications are received normally. *Refer to Self-Diagnostics on page 505* for details on how to use this function.

Setting 68: High Slip Braking

Closing an input programmed for this function triggers High Slip Braking (available only in V/f and V/f w/PG control modes). Once HSB is started, the drive has to come to a complete stop and the HSB command must be removed before a restart can be performed. *Refer to n3: High Slip Braking (HSB) and Overexcitation Braking on page 276*.

Setting 6A: Drive enable

A digital input configured as a “Drive enable” (H1-☐☐ = 6A) will prevent the drive from executing a Run command until the input is closed. When the input is open, the digital operator will display “dnE” to indicate that the drive is disabled.

If a Run command is enabled before the terminal set for “Drive enable” closes, then the drive will not run until the Run command is cycled (i.e., a new Run command is required). If the input is opened while the drive is running, the drive will stop according to the stop method set to b1-03 (*Refer to b1-03: Stopping Method Selection on page 138*).

Setting 71: Speed/Torque Control switch

Switches the drive between Torque Control and Speed Control. Torque Control is enabled when the terminal is closed, and Speed Control is enabled when the terminal is open. Note that parameter d5-01 must be set to 0 when using this function. Refer to *d5: Torque Control on page 188* and *Switching Between Torque and Speed Control on page 190*.

Setting 72: Zero Servo

Used to activate the Zero Servo function that can be used to lock the rotor at a certain position. Refer to *b9: Zero Servo on page 164* for details.

Setting 75, 76: Up 2, Down 2 command

The Up 2 and Down 2 function can be used to add a bias to the frequency reference. The input programmed for 75 will increase the bias and the input programmed for 76 will decrease it. *Table 5.37* explains how the Up/Down 2 function works depending on the frequency reference source and parameters d4-01, d5-03, and d4-05. *Refer to d4: Frequency Reference Hold and Up/Down 2 Function on page 183* for detailed explanations of these and other Up/Down 2 related parameters.

Note: **1.** The Up 2 and Down 2 functions must be set as a pair.
2. When using the Up 2 and Down 2, set appropriate bias limit values to parameters d4-08 and d4-09.

Table 5.37 Up/Down 2 Operations

Condition	Freq. Ref. Source	d4-03	d4-05	d4-01	Operation	Frequency Saved
1	Multi-Step Speed Reference	0	0	0	• Accelerates (increases the bias) while the Up 2 terminal is closed. • Decelerates (decreases the bias) while Down 2 is closed. • Holds output frequency (holds the bias) when no Up 2 or Down 2 input or both active. • Resets the bias when the reference changes. • Operates with the frequency reference in all other situations.	Not saved
2				1		If the bias and frequency reference are constant for 5 s, the bias is added to the active frequency reference and reset afterwards.
3			1	--	• Accelerates (increases the bias) while the Up 2 terminal is closed. • Decelerates (decreases the bias) while Down 2 is closed. • Otherwise operates at the frequency reference.	Not saved
4	Multi-Step Speed Reference	Value other than 0	--	0	• When the Up 2 is enabled, drive accelerates up to the frequency reference plus d4-03 (bias is increased for d4-03). • When Down 2 is enabled, drive decelerates down to the frequency reference minus d4-03 (bias is decreased for d4-03). • Holds output frequency (holds the bias) when no Up 2 or Down 2 input or both active. • Resets the bias when the reference changes. • Operates with the frequency reference in all other situations.	Not saved
5				1		If the bias and frequency reference are constant for 5 s, the bias is added to the active frequency reference and reset afterwards.
6	Other (analog comm., etc.)	0	0	0	• Accelerates (increases the bias) while the Up 2 terminal is closed. • Decelerates (decreases the bias) while Down 2 is closed. • Holds output frequency (holds the bias) when no Up 2 or Down 2 input or both active. • If the frequency reference changes for more than d4-07 during accel/decel, bias value is held until the output frequency meets the reference (speed agree).	Not saved
7				1		If the bias is constant for 5 s, it is saved to parameter d4-06. The frequency reference cannot be overwritten, so only the bias is saved.
8	Other (analog comm, etc.)	0	1	--	• Accelerates (increases the bias) while the Up 2 terminal is closed. • Decelerates (decreases the bias) while Down 2 is closed. • Otherwise operates at the frequency reference	Not saved
9		Value other than 0	--	0	• When Up 2 is enabled, drive accelerates up to the frequency reference plus d4-03 (increases the bias for d4-03). • When Down 2 is enabled, drive decelerates down to the frequency reference minus d4-03 (decreases the bias for d4-03). • If the frequency reference changes for more then d4-07 during accel/decel, bias value is held until the output frequency meets the reference (speed agree).	Not saved
10				1		If the bias is constant for 5 s, it is saved to parameter d4-06. The frequency reference cannot be overwritten, so only the bias is saved.

Setting 77: ASR gain switch

Switches the ASR gain between the values set to C5-01 and C5-03. The gain set to C5-03 is enabled when the terminal is closed, and C5-01 is enabled when the terminal opens again. See *C5-01, C5-03 / C5-02, C5-04: ASR Proportional Gain 1, 2 / ASR Integral Time 1, 2 on page 173* for a more detailed description.

Setting 78: External torque reference polarity inversion

Reverses the direction of the torque reference when the terminal closes. Refer to *d5: Torque Control on page 188* and *Setting the Torque Reference, Speed Limit, and Torque Compensation Values on page 188* for details.

Setting 7A, 7B: KEB Ride-Thru 2 (N.C., N.O.)

An input terminal set to 7A or 7B can trigger Single Drive KEB Ride-Thru during deceleration. If enabled, L2-29 is disregarded. Refer to *KEB Ride-Thru Function on page 249* for details.

Digital Input Function	Drive Operation	
	Input Open	Input Closed
Setting 7A (N.C.)	Single Drive KEB Ride-Thru 2	Normal operation
Setting 7B (N.O.)	Normal operation	Single Drive KEB Ride-Thru 2

Note: KEB Ride-Thru 1 and 2 cannot both be assigned to the input terminals at the same time. Doing so will trigger an oPE3 error.

Setting 7C, 7D: Short Circuit Braking (N.O., N.C.) (OLV/PM, AOLV/PM)

An input programmed for this function can be used to activate Short Circuit Braking in Open Loop Vector control modes for PM motors. By linking all three phases of a PM motor, Short Circuit Braking creates a braking torque that can be used to stop a rotating motor or prevent a motor from coasting due to external forces (such as the windmill effect in fan applications). Parameter b2-18 can be used to limit the current during Short Circuit Braking.

DIgital Input Function	Drive Operation	
	Input Open	Input Closed
Setting 7C (N.O.)	Normal operation	Short Circuit Braking
Setting 7D (N.C.)	Short-Circuit Braking	Normal operation

Setting 7E: Forward/reverse detection (for V/f Control with Simple PG Feedback)

When a digital input is programmed for this function, the input determines the motor rotation direction for V/f Control with Simple PG feedback (A1-02 = 0 and H6-01 = 3). If the input is open, the speed feedback signal is considered to be forward. If the input is closed, it is considered to be in reverse. *Refer to H6: Pulse Train Input/Output on page 241*.

上正科技有限公司
購買、維修 此手冊零組件
電話 037-[illegible]
Email: service@repairtw.com
line id: @zzzz
www.repairtw.com

Setting 7F: Bi-Directional PID Output Selection

If PID output to bi-directional output conversion is enabled in parameter d4-11, a digital input programmed for 7F can be used to switch between normal output or bi-directional output. If the digital input is open, the PID output builds the output frequency reference.

If the input is closed, the PID output is converted to bi-directional output frequency reference. Refer to *d4-11: Bi-Directional Output Selection on page 187*.

Setting 90 to 97: DriveWorksEZ Digital Input 1 to 8

These settings are for digital inputs functions used in DriveWorksEZ. Normally there is no need to change these settings.

Setting 9F: DriveWorksEZ Disable

This function is used to enable or disable a DriveWorksEZ program in the drive. An input programmed for this function is effective only if A1-07 = 2.

Status	Description
Open	DriveWorksEZ enabled
Closed	DriveWorksEZ disabled

◆ H2: Multi-Function Digital Outputs

■ H2-01 to H2-03: Terminal M1-M2, M3-M4, and M5-M6 Function Selection

The drive has three multi-function output terminals. *Table 5.38* lists the functions available for theses terminals using H2-01, H2-02, and H2-03.

No.	Parameter Name	Setting Range	Default
H2-01	Terminal M1-M2 Function Selection	0 to 192	0: During run
H2-02	Terminal M3-M4 Function Selection	0 to 192	1: Zero Speed
H2-03	Terminal M5-M6 Function Selection	0 to 192	2: Speed agree 1

Table 5.38 Multi-Function Digital Output Terminal Settings

Setting	Function	Page	Setting	Function	Page
0	During run	225	1D	During regeneration	231
1	Zero Speed	225	1E	Restart enabled	231
2	Speed agree 1	226	1F	Motor overload alarm (oL1)	231
3	User-set speed agree 1	226	20	Drive overheat pre-alarm (oH)	231
4	Frequency detection 1	227	22	Mechanical Weakening detection	231
5	Frequency detection 2	227	2F	Maintenance period	232
6	Drive ready	227	30	During torque limit	232
7	DC bus undervoltage	228	31	During speed limit	232
8	During baseblock (N.O.)	228	32	During speed limit in Torque Control	232
9	Frequency reference source	228	33	Zero Servo complete	232
A	Run command source	228	37	During frequency output	232
B	Torque detection 1 (N.O.)	228	38	Drive enabled	232
C	Frequency reference loss	228	39	Watt hour pulse output	232
D	Braking resistor fault	228	3C	LOCAL/REMOTE Status	233
E	Fault	228	3D	During Speed Search	233
F	Through mode	229	3E	PID feedback low	233
10	Minor fault	229	3F	PID feedback high	233
11	Fault reset command active	229	4A	During KEB operation	233
12	Timer output	229	4B	During Short Circuit Braking	233
13	Speed agree 2	229	4C	During Fast Stop	233
14	User-set speed agree 2	229	4D	oH pre-alarm time limit	233
15	Frequency detection 3	230	4E	Braking transistor fault (rr)	233
16	Frequency detection 4	230	4F	Braking resistor overheat (rH)	233
17	Torque detection 1 (N.C.)	228	60	Internal cooling fan alarm	233
18	Torque detection 2 (N.O.)		61	Rotor Position Detection Completed	233
19	Torque detection 2 (N.C.)	228	90	DriveWorksEZ digital output 1	233
1A	During reverse	231	91	DriveWorksEZ digital output 2	
1B	During baseblock (N.C.)	231	92	DriveWorksEZ digital output 3	
1C	Motor 2 selection	231	100 to 192	Functions 0 to 92 with inverse output	233

上正科技有限公司
購買、維修 此手冊零組件
電話： 037-466333
Email: service@repairtw.com
Line id: @zzzz
www.repairtw.com

Setting 0: During Run

Output closes when the drive is outputting a voltage.

Status	Description
Open	Drive is stopped.
Closed	A Run command is input or the drive is during deceleration or during DC injection.

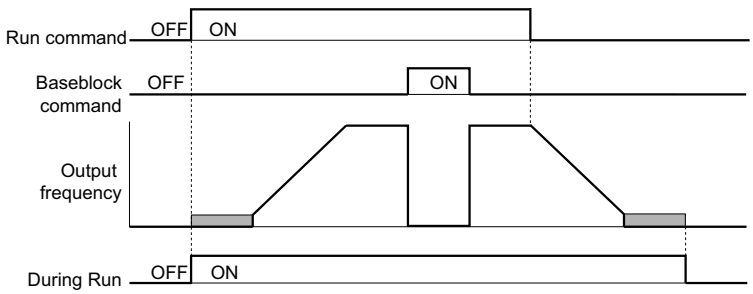

Figure 5.65 During Run Time Chart

Setting 1: Zero Speed

Terminal closes whenever the output frequency or motor speed (CLV, CLV/PM) falls below the minimum output frequency set to E1-09 or b2-01.

Status	Description
Open	Output frequency is above the minimum output frequency set to E1-09 or b2-01
Closed	Output frequency is less than the minimum output frequency set to E1-09 or b2-01

Note: When using CLV or CLV/PM control modes, the zero speed level is defined by b2-01. In all other control modes, the zero speed level is the minimum output frequency set to E1-09.

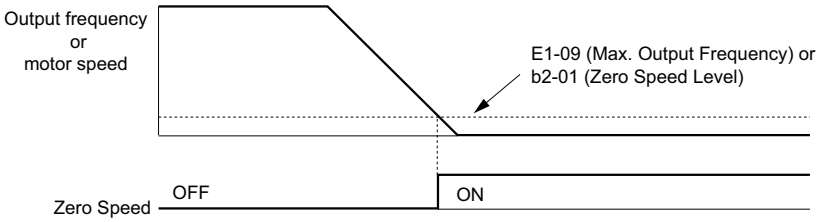

Figure 5.66 Zero-Speed Time Chart

Setting 2: Speed agree 1 (f_{ref}/f_{out} Agree 1)

Closes whenever the actual output frequency or motor speed (CLV, CLV/PM) is within the Speed Agree Width (L4-02) of the current frequency reference regardless of the direction.

Status	Description
Open	Output frequency or motor speed does not match the frequency reference while the drive is running.
Closed	Output frequency or motor speed is within the range of frequency reference ±L4-02.

Note: Detection works in both directions, forward and reverse.

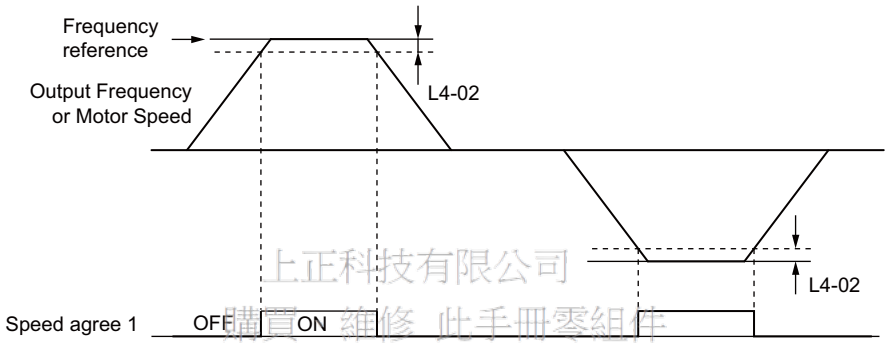

Figure 5.67 Speed Agree 1 Time Chart

上正科技有限公司
購買 維修 此手冊零組件
電話：037-466333
Email: service@repairtw.com
Line id: @222
www.repairtw.com

Refer to L4-01, L4-02: Speed Agreement Detection Level and Detection Width on page 262 for more details.

Setting 3: User-set speed agree 1 (f_{ref}/f_{set} Agree 1)

Closes whenever the actual output frequency or motor speed (CLV, CLV/PM) and the frequency reference are within the speed agree width (L4-02) of the programmed speed agree level (L4-01).

Status	Description
Open	Output frequency or motor speed and frequency reference are not both within the range of L4-01 ±L4-02.
Closed	Output frequency or motor speed and the frequency reference are both within the range of L4-01 ±L4-02.

Note: Frequency detection works in both forward and reverse. The value of L4-01 is used as the detection level for both directions.

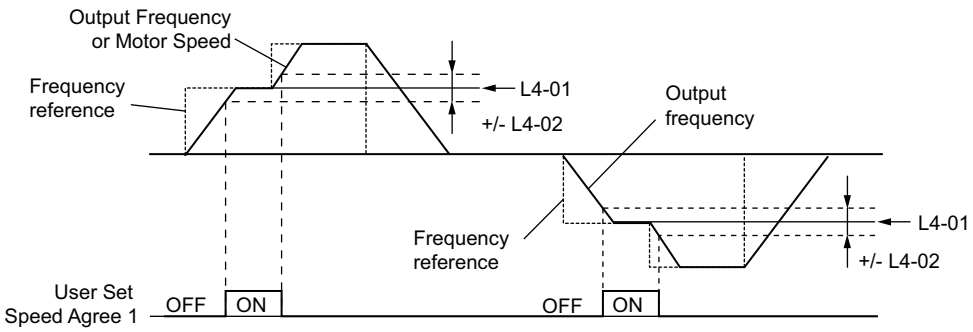

Figure 5.68 User Set Speed Agree 1 Time Chart

Refer to L4-01, L4-02: Speed Agreement Detection Level and Detection Width on page 262 for more instructions.

Setting 4: Frequency Detection 1

Output opens when the output frequency or motor speed (CLV, CLV/PM) rises above the detection level set in L4-01 plus the detection width set in L4-02. The terminal remains open until the output frequency or motor speed falls below the level set in L4-01.

Status	Description
Open	Output frequency or motor speed exceeded L4-01 + L4-02.
Closed	Output frequency or motor speed is below L4-01 or has not exceeded L4-01 + L4-02.

Note: Frequency detection works in both forward and reverse. The value of L4-01 is used as the detection level for both directions.

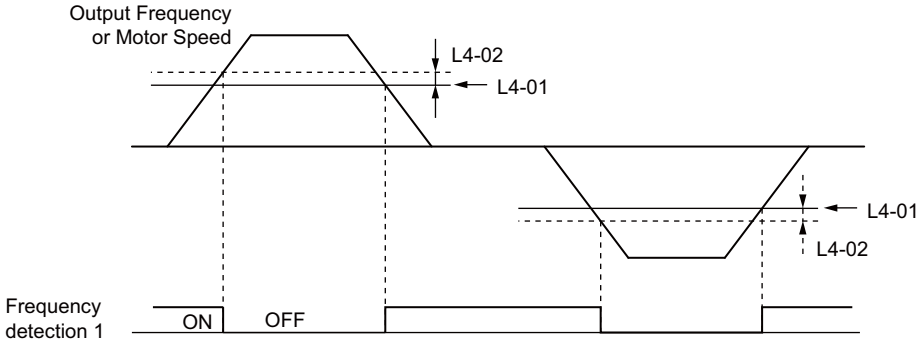

Figure 5.69 Frequency Detection 1 Time Chart

Refer to L4-01, L4-02: Speed Agreement Detection Level and Detection Width on page 262 for more details.

Setting 5: Frequency Detection 2

Output closes whenever the output frequency or motor speed (CLV, CLV/PM) is above the detection level set in L4-01. The terminal remains closed until the output frequency or motor speed falls below L4-01 minus the setting of L4-02.

上正科技有限公司
購買・維修 此手冊零組件
電話： 037-461
Email: service@repairtw.com
Line Id: @zzzz
www.repairtw.com

Status	Description
Open	Output frequency or motor speed is below L4-01 minus L4-02 or has not exceeded L4-01.
Closed	Output frequency or motor speed exceeded L4-01.

Note: Frequency detection works in both forward and reverse. The value of L4-01 is used as the detection level for both directions.

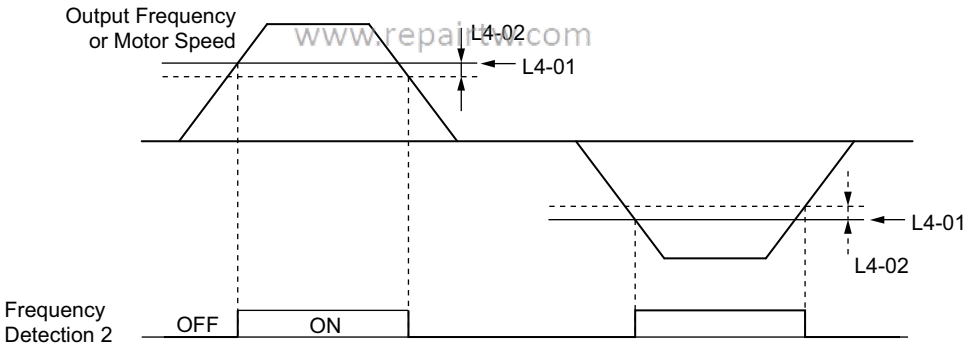

Figure 5.70 Frequency Detection 2 Time Chart

Refer to L4-01, L4-02: Speed Agreement Detection Level and Detection Width on page 262 for more details.

Setting 6: Drive ready

Output closes whenever the drive is ready to operate the motor. The terminal will not close under the conditions listed below, and any Run commands will be disregarded.

- When the power is shut off
- During a fault
- When the drive's internal power supply has malfunctioned
- When a parameter setting error makes it impossible to run
- Although stopped, an overvoltage or undervoltage situation occurs
- While editing a parameter in the Programming Mode (when b1-08 = 0)

Setting 7: DC bus undervoltage

Output closes whenever the DC bus voltage or control circuit power supply drops below the trip level set in L2-05. A fault in the DC bus circuit will also cause the terminal to set for “DC bus undervoltage” to close.

Status	Description
Open	DC bus voltage is above the level set to L2-05
Closed	DC bus voltage has fallen below the trip level set to L2-05.

Setting 8: During baseblock (N.O.)

Output closes to indicate that the drive is in a baseblock state. While in baseblock, output transistors do not switch and no main circuit voltage is output.

Status	Description
Open	Drive is not in a baseblock state.
Closed	Baseblock is being executed.

Setting 9: Frequency reference source

A digital output programmed for this function shows the frequency reference source that is currently selected.

Status	Description
Open	Frequency reference is provided from External reference 1 (b1-01) or External reference 2 (b1-15)
Closed	Frequency reference is being sourced from the digital operator.

Setting A: Run command source

A digital output programmed for this function shows the Run command source that is currently selected.

上正科技有限公司
購買、維修、元手冊零組件
電話： 037-466333
Email: service@repairtw.com
Line id: @222
www.repairtw.com

Status	Description
Open	Run command is provided from External reference 1 (b1-02) or 2 (b1-16).
Closed	Run command is being sourced from the digital operator.

Setting B, 17, 18, 19: Torque detection 1 (N.O., N.C.), Torque detection 2 (N.O., N.C.)

These digital output functions can be used to signal an overtorque or undertorque situation to an external device.

Set up the torque detection levels and select the output function from the table below. *Refer to L6: Torque Detection on page 264* for details.

Setting	Status	Description
B	Closed	Torque detection 1 (N.O.): Output current/torque exceeds (overtorque detection) or is below (undertorque detection) the torque value set in parameter L6-02 for longer than the time specified in parameter L6-03.
17	Open	Torque detection 1 (N.C.): Output current/torque exceeds (overtorque detection) or is below (undertorque detection) the torque value set in parameter L6-02 for longer than the time specified in parameter L6-03.
18	Closed	Torque detection 2 (N.O.): Output current/torque exceeds (overtorque detection) or is below (undertorque detection) the torque value set in parameter L6-05 for longer than the time specified in parameter L6-06.
19	Open	Torque detection 2 (N.C.): Output current/torque exceeds (overtorque detection) or is below (undertorque detection) the torque value set in parameter L6-05 for longer than the time specified in parameter L6-06.

Setting C: Frequency reference loss

An output set for this function will be closed if frequency reference loss is detected. *Refer to L4-05: Frequency Reference Loss Detection Selection on page 262* for details.

Setting D: Braking resistor fault

An output programmed for this function will close when the dynamic braking resistor (DB) overheats or the braking transistor is in a fault condition.

Setting E: Fault

The digital output will close whenever the drive experiences a fault (this excludes faults CPF00 and CPF01).

Setting F: Through mode

Select this setting when using the terminal in a pass-through mode. When set to F, an output does not trigger any function in the drive. Setting F, however, still allows the output status to be read by a PLC via a communication option or MEMOBUS/Modbus communications.

Setting 10: Minor fault

Output closes when a minor fault condition is present.

Setting 11: Fault reset command active

Output closes whenever there is an attempt to reset a fault situation from the control circuit terminals, via serial communications, or using a communications option card.

Setting 12: Timer output

This setting configures a digital output terminal as output for the timer function. *Refer to b4: Delay Timers on page 151* for details.

Setting 13: Speed agree 2 (f_{ref} /f_{out} agree 2)

Closes whenever the actual output frequency or motor speed (CLV, CLV/PM) is within the speed agree width (L4-04) of the current frequency reference, regardless of the direction.

Status	Description
Open	Output frequency or motor speed does not match the frequency reference while the drive is running.
Closed	Output frequency or motor speed is within the range of frequency reference ±L4-04.

Note: Detection works in both forward and reverse.



上正科技有限公司
購買、維修 此手冊零組件
電話： 037-466333
Email: service@repairtw.com
Line id: @zzzz
www.repairtw.com

Figure 5.71 Speed Agree 2 Time Chart

Refer to L4-03, L4-04: Speed Agreement Detection Level and Detection Width (+/-) on page 262 for more details.

Setting 14: User-set speed agree 2 (f_{ref} /f_{set} agree 2)

Closes whenever the actual output frequency or motor speed (CLV, CLV/PM) and the frequency reference are within the speed agree width (L4-04) of the programmed speed agree level (L4-03). As the detection level L4-03 is a signed value, detection works in the specified direction only.

Status	Description
Open	Output frequency or motor speed and frequency reference are both outside the range of L4-03 ±L4-04
Closed	Output frequency or motor speed and the frequency reference are both with in the range of L4-03 ±L4-04

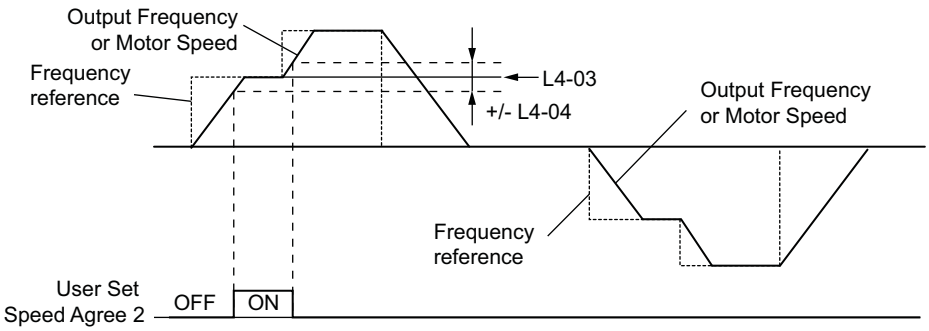

Figure 5.72 User Set Speed Agree 2 Example with a Positive L3-04 Value

Refer to L4-03, L4-04: Speed Agreement Detection Level and Detection Width (+/-) on page 262 for more details.

Setting 15: Frequency detection 3

Output opens when the output frequency or motor speed (CLV, CLV/PM) rises above the detection level set in L4-03 plus the detection with set in L4-04. The terminal remains open until the output frequency or motor speed falls below the level set in L4-03. As the detection level L4-03 is a signed value, the detection works in the specified direction only.

Status	Description
Open	Output frequency or motor speed exceeded L4-03 plus L4-04.
Closed	Output frequency or motor speed is below L4-03 or has not exceeded L4-03 plus L4-04 yet.

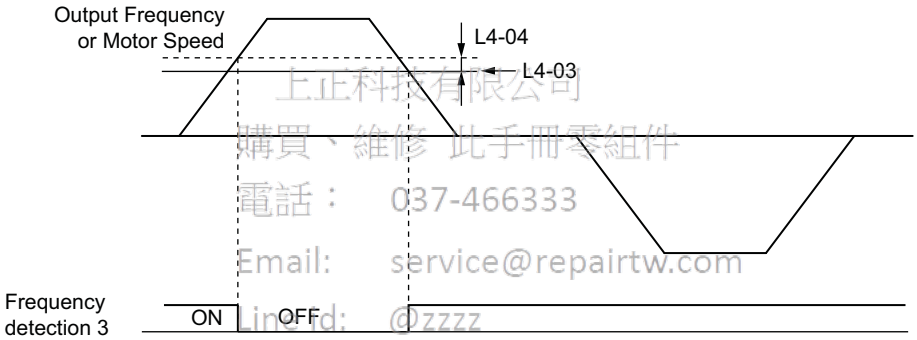

上正科技有限公司
購買、維修 此手冊零組件
電話： 037-466333
Email: service@repairtw.com
Line Id: @zzzz
www.repairtw.com

Figure 5.73 Frequency Detection 3 Example with a Positive L3-04 Value

Refer to L4-03, L4-04: Speed Agreement Detection Level and Detection Width (+/-) on page 262 for more details.

Setting 16: Frequency detection 4

Output closes whenever the output frequency or motor speed (CLV, CLV/PM) is above the detection level set in L4-03. The terminal remains closed until the output frequency or motor speed falls below L4-03 minus the setting of L4-04. As the detection level L4-03 is a signed value, frequency detection works in the specified direction only.

Status	Description
Open	Output frequency or motor speed is below L4-03 minus L4-04 or has not exceeded L4-03 yet.
Closed	Output frequency or motor speed exceeded L4-03.

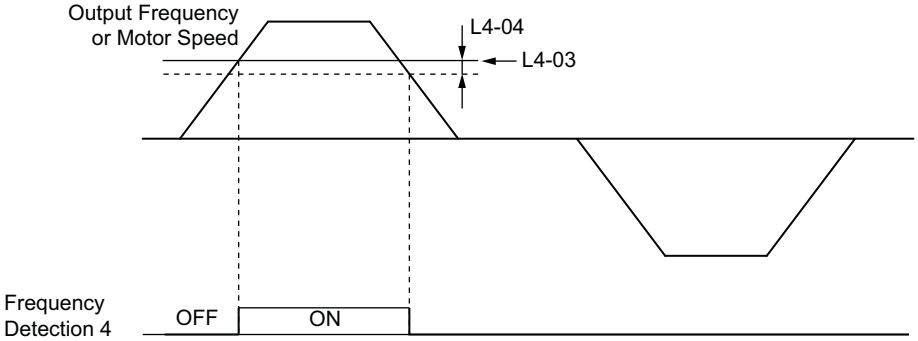

Figure 5.74 Frequency Detection 4 Example with Positive L3-04 Value

Refer to L4-03, L4-04: Speed Agreement Detection Level and Detection Width (+/-) on page 262 for more details.

Setting 1A: During reverse

A digital output set for “During reverse” will close whenever the drive is running the motor in the reverse direction.

Status	Description
Open	Motor is being driven in the forward direction or stopped.
Closed	Motor is being driven in reverse.

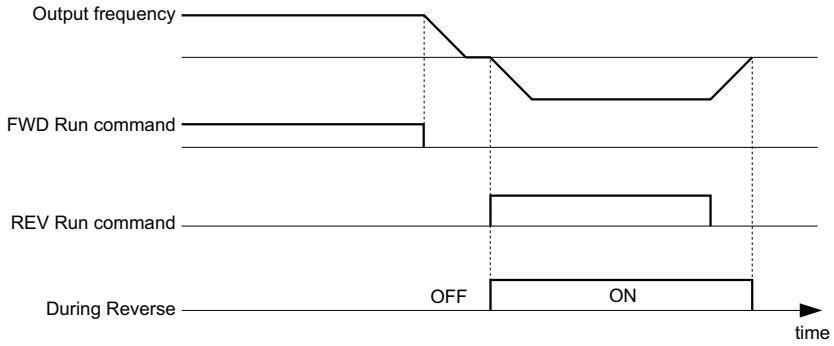

Figure 5.75 Reverse Direction Output Example Time Chart

Setting 1B: During baseblock (N.C.)

Output opens to indicate that the drive is in a baseblock state. While Baseblock is executed, output transistors do not switch and no main circuit voltage is output.

Status	Description
Open	Baseblock is being executed.
Closed	Drive is not in a baseblock state.

上正科技有限公司
購買、維修 此手冊零組件
電話： 037-461333
Email: service@repairtw.com
Line id: @zzzz
www.repairtw.com

Setting 1C: Motor 2 selection

Indicates which motor is selected when another output terminal is set up to switch drive operation between two motors (H1-☐☐ = 16). *Refer to Setting 16: Motor 2 selection on page 219* for details on switching motors.

Status	Description
Open	Motor 1 is selected.
Closed	Motor 2 is selected.

Setting 1D: During regeneration

Terminal closes when the motor is driven in the regenerative mode.

Setting 1E: Restart enabled

An output set for “Restart enabled” closes once the drive begins attempting to restart after a fault has occurred.

The fault restart function allows the drive to automatically clear a fault. The terminal set to 1E will close after the fault is cleared and the drive has begun attempting to restart. If the drive cannot successfully restart within the number of attempts permitted by L5-01, then a fault will be triggered and the terminal set to 1E will open. *Refer to L5: Fault Restart on page 263* for details on automatic restart.

Setting 1F: Motor overload alarm (oL1)

An output programmed for this function will close when the motor overload level estimated by the oL1 fault detection exceeds 90% of the oL1 detection level. *Refer to L1-01: Motor Overload Protection Selection on page 244*.

Setting 20: Drive overheat pre-alarm (oH)

Output closes whenever the drive heatsink temperature reaches the level specified by parameter L8-02. *Refer to L8-02: Overheat Alarm Level on page 269* for details on drive overheat detection.

Setting 22: Mechanical weakening detection

Output closes when a mechanical weakening situation is detected. *Refer to Mechanical Weakening Detection on page 266* for details.

Setting 2F: Maintenance period

Output closes when the cooling fan, DC bus capacitors, or DC bus pre-charge relay may require maintenance as determined by the estimated performance life span of those components. Components performance life is displayed as a percentage on the digital operator screen. *Refer to Periodic Maintenance on page 349*.

Setting 30: During torque limit

Output closes when the motor is operating at the torque limit specified by the L7-☐☐ parameters or an analog input. This setting can only be used in OLV, CLV, AOLV/PM and CLV/PM control modes. *Refer to L7-01 to L7-04: Torque Limits on page 268* for details.

Setting 31: During speed limit

Output closes when the speed limit has been reached. This function can be used in CLV and CLV/PM control modes.

Status	Description
Open	The conditions described below are not present.
Closed	1. The frequency reference has reached the upper limit set in d2-01. 2. The frequency reference has fallen to the lower limit set in d2-02 or d2-03. 3. Parameter b1-05 is set to 1, 2, or 3, and the frequency reference has fallen below the minimum output frequency (E1-09).

Setting 32: During speed limit in Torque Control

The motor torque and load torque are not in balance, causing the motor to accelerate. An output terminal set to 32 closes when the motor reaches the speed limit. Refer to *d5: Torque Control on page 188* and *Indicating Operation at the Speed Limit on page 190* for details.

Setting 33: Zero Servo complete

Output closes when Zero Servo is enabled and the load is locked into position within the allowable deviation (b9-02). For how Zero Servo operates, see *b9: Zero Servo on page 164*.

亞正科技有限公司
購買、維修 此手冊零組件
電話： 037-466333
Email: service@repairtw.com
Line id: @zzzz
www.repairtw.com

Setting 37: During frequency output

Output closes when the drive is outputting a frequency.

Status	Description
Open	Drive is stopped or one of the following functions is being performed: baseblock, DC Injection Braking, Short Circuit Braking.
Closed	Drive is outputting frequency.

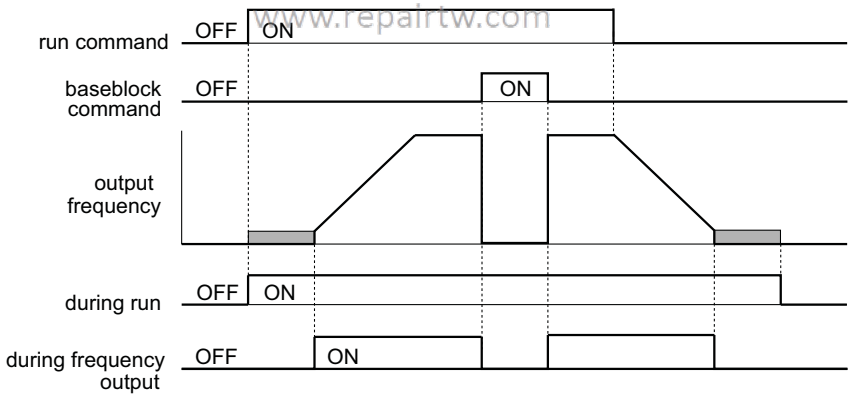

Figure 5.76 During Frequency Output Time Chart

Setting 38: Drive enable

A digital output set for “Drive enable” will reflect the status of a digital input configured as a “Drive enable” input (H1-☐☐ = 6A). If that digital input closes, then the digital output set for “Drive enable” will also close.

Setting 39: Watt hour pulse output

Outputs a pulse to indicate the watt hours. *Refer to H2-06: Watt Hour Output Unit Selection on page 234* for details.

Setting 3C: LOCAL/REMOTE status

Output terminal closes while the drive is set for LOCAL and opens when in REMOTE.

Status	Description
Open	REMOTE: The external reference that has been selected (either b1-01 and b1-02 or b1-15 and b1-16) is used as frequency reference and Run command source
Closed	LOCAL: The digital operator is used as frequency reference and Run command source

Setting 3D: During Speed Search

Output terminal closes while Speed Search is being performed. ***Refer to b3: Speed Search on page 146*** for details.

Setting 3E: PID feedback low

Output terminal closes when a PID feedback loss is detected. The feedback is considered to be lost if it falls below the level set to b5-13 for longer than the time set to b5-14. ***Refer to PID Feedback Loss Detection on page 156*** for details.

Setting 3F: PID feedback high

Output terminal closes when a PID feedback loss is detected. The feedback is considered to be lost if it rises beyond the level set to b5-36 for longer than the time set to b5-37. ***Refer to PID Feedback Loss Detection on page 156*** for details.

Setting 4A: During KEB operation

Output terminal closes while KEB is being performed. ***Refer to KEB Ride-Thru Function on page 249*** for a KEB function description.

Setting 4B: During Short Circuit Braking

Output terminal closes while Short Circuit Braking is being executed.

Setting 4C: During Fast Stop

Output terminal closes when a Fast Stop is being executed. ***Setting 15, 17: Fast Stop (N.O., N.C.) on page 218***.

上正科技有限公司
購買、維修 此手冊零組件
電話： 097-466333
Email: service@repairtw.com
Line id: @zzzz
www.repairtw.com

Setting 4D: oH pre-alarm time limit

Output terminal closes when the drive is reducing the speed due to a drive overheat alarm (L8-03 = 4) and the overheat alarm has not disappeared after ten frequency reduction operation cycles. ***Refer to L8-03: Overheat Pre-Alarm Operation Selection on page 269*** for a more detailed description.

Setting 4E: Braking transistor fault (rr)

Output closes if the drive's internal braking transistor reaches the overheat level.

Setting 4F: Braking resistor overheat (rH)

The braking resistor may overheat due to motor regeneration or too short of a deceleration time setting. The output terminal closes when the braking resistor exceeds the overheat level.

Setting 60: Internal cooling fan alarm

Output closes when the drive's internal cooling fan has failed.

Setting 61: Rotor position detection complete

After the Run command is given, the output terminal signals that the drive has detected the rotor position (PM motors).

Setting 90 to 92: DriveWorksEZ digital output 1 to 3

These settings are for output functions used in DriveWorksEZ. Normally there is no need to change these settings.

Setting 100 to 192: Functions 0 to 92 with inverse output

These settings have the same function as settings 0 to 92 but with inverse output. Set as 1□□, where the "1" indicates inverse output and the last two digits specify the setting number of the function.

Examples:

- For inverse output of "8: During baseblock", set 108.
- For inverse output of "4A: During KEB" set 14A.

■ H2-06: Watt Hour Output Unit Selection

When one of the multi-function terminals is set to output the number of watt hours (H2-01, H2-02, or H2-03 = 39), parameter H2-06 determines the units for the output signal.

This output function provides a watt hour meter or a PLC input by a 200 ms pulse signal. H2-06 determines the frequency that pulses are issued to keep track of the kWh for the drive.

No.	Parameter Name	Setting Range	Default
H2-06	Watt Hour Output Unit Selection	0: 0.1 kWh units 1: 1 kWh units 2: 10 kWh units 3: 100 kWh units 4: 1000 kWh units	0

Note: **1.** A negative power output (i.e., regeneration) does not subtract from the total watt hours.
2. The drive keeps track of the watt hours as long as the control circuit has power. The value is reset when the power supply is shut off.

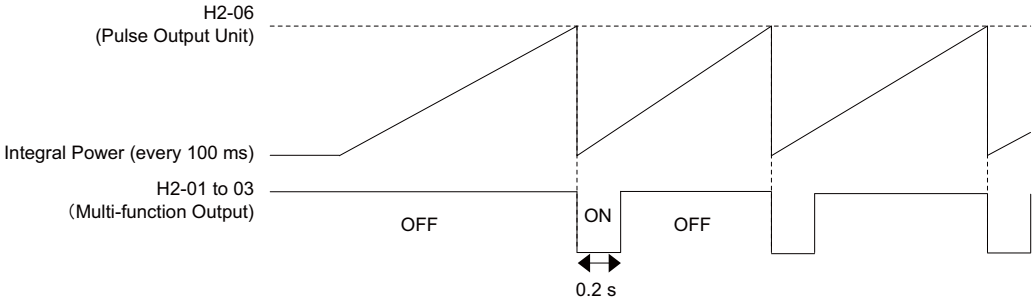

Figure 5.77 Watt Hour Output Example

上正科技有限公司
購買、維修 此手冊零組件
電話： 037-466333
Email: service@repairtw.com
Line id: @zzzz
www.repairtw.com

◆ H3: Multi-Function Analog Inputs

The drive is equipped with three multi-function analog input terminals: A1, A2, and A3. See *Table 5.39* for a listing of the functions that can be set to these terminals.

■ H3-01: Terminal A1 Signal Level Selection

Selects the input signal level for analog input A1.

No.	Name	Setting Range	Default
H3-01	Terminal A1 Signal Level Selection	0 to 1	0

Setting 0: 0 to 10 Vdc

The input level is 0 to 10 Vdc. The minimum input level is limited to 0%, so that a negative input signal due to gain and bias settings will be simply read as 0%.

Setting 1: –10 to 10 Vdc

The input level is –10 to 10 Vdc. If the resulting voltage is negative after being adjusted by gain and bias settings, then the motor will rotate in reverse.

■ H3-02: Terminal A1 Function Selection

Determines the function assigned to analog input terminal A1. *Refer to Multi-Function Analog Input Terminal Settings on page 237* for instructions on how to adjust the signal level.

No.	Name	Setting Range	Default
H3-02	Terminal A1 Function Selection	0 to 31	0

■ H3-03, H3-04: Terminal A1 Gain and Bias Settings

Parameter H3-03 sets the level of the selected input value that is equal to 10 Vdc input at terminal A1 (gain).

Parameter H3-04 sets the level of the selected input value that is equal to 0 V input at terminal A1 (bias).

Both can be used to adjust the characteristics of the analog input signal to terminal A1.

No.	Name	Setting Range	Default
H3-03	Terminal A1 Gain Setting	-999.9 to 999.9%	100.0%
H3-04	Terminal A1 Bias Setting	-999.9 to 999.9%	0.0%

Setting Examples

- Gain H3-03 = 200%, bias H3-04 = 0, terminal A1 as frequency reference input (H3-02 = 0):
  An input 10 Vdc will be equivalent to a 200% frequency reference and 5 Vdc will be equivalent to a 100% frequency reference. Since the drive output is limited by the maximum frequency parameter (E1-04), the frequency reference will be equal to E1-04 above 5 Vdc.

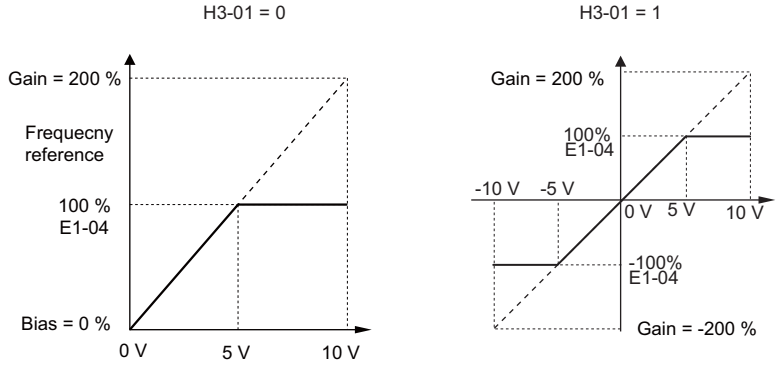

Figure 5.78 Frequency Reference Setting by Analog Input with Increased Gain

- Gain H3-03 = 100%, bias H3-04 = -25%, terminal A1 as frequency reference input:
  An input of 0 Vdc will be equivalent to a -25% frequency reference.
  When parameter H3-01 = 0, the frequency reference is 0% between 0 and 2 Vdc input.
  When parameter H3-01 = 1, the motor will rotate in reverse between -10 and 2 Vdc input.

上正科技有限公司
購買、維修 此手冊零組件
電話： 037-466333
Email: service@repairtw.com
Line id: @zzzz
www.repairtw.com

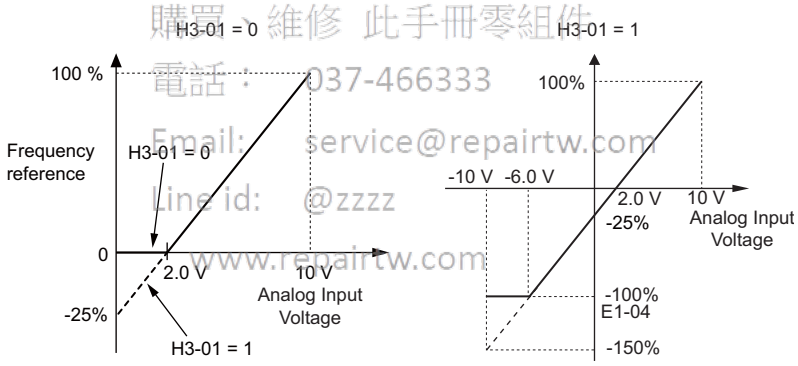

Figure 5.79 Frequency Reference Setting by Analog Input with Negative Bias

■ H3-05: Terminal A3 Signal Level Selection

Selects the input signal level for analog input A3. *Refer to Multi-Function Analog Input Terminal Settings on page 237* for a list of functions and descriptions.

No.	Name	Setting Range	Default
H3-05	Terminal A3 Signal Level Selection	0, 1	0

Setting 0: 0 to 10 Vdc

The input level is 0 to 10 Vdc. See the explanation provided for H3-01. *Refer to Setting 0: 0 to 10 Vdc on page 234*.

Setting 1: –10 V to 10 Vdc

The input level is –10 to 10 Vdc. See the explanation provided for H3-01. *Refer to Setting 1: –10 to 10 Vdc on page 234*.

■ H3-06: Terminal A3 Function Selection

Determines the function assigned to analog input terminal A3. *Refer to Multi-Function Analog Input Terminal Settings on page 237* for a list of functions and descriptions.

When analog input A3 is used as PTC input set H3-06 = E and make sure switch S4 on the terminal board is set for PTC input. Also refer to *Terminal A3 Analog/PTC Input Selection on page 79*.

No.	Name	Setting Range	Default
H3-06	Terminal A3 Function Selection	0 to 31	2

■ H3-07, H3-08: Terminal A3 Gain and Bias Setting

Parameter H3-07 sets the level of the selected input value that is equal to 10 Vdc input at terminal A3 (gain).

Parameter H3-08 sets the level of the selected input value that is equal to 0 V input at terminal A3 (bias).

No.	Name	Setting Range	Default
H3-07	Terminal A3 Gain Setting	-999.9 to 999.9%	100.0%
H3-08	Terminal A3 Bias Setting	-999.9 to 999.9%	0.0%

■ H3-09: Terminal A2 Signal Level Selection

Selects the input signal level for analog input A2. Be sure to also set DIP switch S1 on the terminal board accordingly for a voltage input or current input.

No.	Name	Setting Range	Default
H3-09	Terminal A2 Signal Level Selection	0 to 3	2

Setting 0: 0 to 10 Vdc

The input level is 0 to 10 Vdc. *Refer to Setting 0: 0 to 10 Vdc on page 234*

Setting 1: –10 to 10 Vdc

The input level is –10 to 10 Vdc. *Refer to Setting 1: –10 to 10 Vdc on page 234*.

Setting 2: 4 to 20 mA Current Input

The input level is 4 to 20 mA. Negative input values by negative bias or gain settings will be limited to 0%.

Setting 3: 0 to 20 mA Current Input

The input level is 0 to 20 mA. Negative input values by negative bias or gain settings will be limited to 0%.

上正科技有限公司
購買、維修 此手冊零組件
電話： 037-466333
Email: service@repairtw.com
Line Id: @2222
www.repairtw.com

■ H3-10: Terminal A2 Function Selection

Determines the function assigned to analog input terminal A2. *Refer to Multi-Function Analog Input Terminal Settings on page 237* for a list of functions and descriptions.

No.	Name	Setting Range	Default
H3-10	Terminal A2 Function Selection	0 to 31	0

■ H3-11, H3-12: Terminal A2 Gain and Bias Setting

Parameter H3-11 sets the level of the input value selected that is equal to 10 Vdc input or 20 mA input to terminal A2.

Parameter H3-12 sets the level of the input value selected that is equal to 0 V, 4 mA or 0 mA input at terminal A2.

Both can be used to adjust the characteristics of the analog input signal to terminal A2. The setting works in the same way as parameters H3-03 and H3-04 for analog input A1.

No.	Name	Setting Range	Default
H3-11	Terminal A2 Gain Setting	-999.9 to 999.9%	100.0%
H3-12	Terminal A2 Bias Setting	-999.9 to 999.9%	0.0%

■ H3-13: Analog Input Filter Time Constant

Parameter H3-13 sets the time constant for a first order filter that will be applied to the analog inputs.

An analog input filter can be used to prevent erratic drive control when a “noisy” analog reference is used. The drive operation becomes more stable the longer the time programmed, but it becomes less responsive to rapidly changing analog signals.

No.	Name	Setting Range	Default
H3-13	Analog Input Filter Time Constant	0.00 to 2.00 s	0.03 s

■ H3-14: Analog Input Terminal Enable Selection

When one of the multi-function digital input parameters is set for "Analog input enable" (H1-☐☐ = C), the value set to H3-14 determines which analog input terminals are enabled and which terminals are disabled when the input is closed. All analog input terminals will be enabled all of the time if H1-☐☐ is not set to C.

No.	Name	Setting Range	Default
H3-14	Analog Input Terminal Enable Selection	1 to 7	7

Setting 1: A1 only enabled
Setting 2: A2 only enabled
Setting 3: A1 and A2 only enabled
Setting 4: A3 only enabled
Setting 5: A1 and A3 only enabled
Setting 6: A2 and A3 only enabled
Setting 7: All analog input terminals enabled

■ Multi-Function Analog Input Terminal Settings

See *Table 5.39* for information on how H3-02, H3-10, and H3-06 determine functions for terminals A1, A2, and A3.

Note: The scaling of all input functions depends on the gain and bias settings for the analog inputs. Set these to appropriate values when selecting and adjusting analog input functions.

Table 5.39 Multi-Function Analog Input Terminal Settings

Setting	Function	Page	Setting	Function	Page
0	Frequency bias	*237*	E	Motor temperature (PTC input)	*239*
1	Frequency gain	*237*	F	Through mode	*239*
2	Auxiliary frequency reference 1	*237*	10	Forward torque limit	*239*
3	Auxiliary frequency reference 2	*238*	11	Reverse Torque Limit	
4	Output voltage bias	*238*	12	Regenerative torque limit	
5	Accel/decel time gain	*238*	13	Torque limit using torque reference/speed limit	*239*
6	DC Injection Braking current	*238*	14	Torque compensation	*239*
7	Torque detection level	*238*	15	General torque limit	*239*
8	Stall Prevention level during run	*238*	16	Differential PID feedback	*239*
9	Output frequency lower limit level	*239*	1F	Through mode	*239*
B	PID feedback	*239*	30	DriveWorksEZ analog input 1	*239*
C	PID setpoint	*239*	31	DriveWorksEZ analog input 2	
D	Frequency bias	*239*	32	DriveWorksEZ analog input 3	

上正科技有限公司
購買、維修此手冊零組件
電話：037-466333
Email: service@repairtw.com
Line id: @zzzz
www.repairtw.com

Setting 0: Frequency bias

The input value of an analog input set to this function will be added to the analog frequency reference value. When the frequency reference is supplied by a different source other than the analog inputs, this function will have no effect. Use this setting also when only one of the analog inputs is used to supply the frequency reference.

By default, analog inputs A1 and A2 are set for this function. Using A1 and A2 at the same time increases the frequency reference by the total of all inputs.

Example: If the analog frequency reference from analog input terminal A1 is 50% and a bias of 20% is applied by analog input terminal A2, the resulting frequency reference will be 70% of the maximum output frequency.

Setting 1: Frequency gain

The input value of an analog input set to this function will be multiplied with the analog frequency reference value.

Example: If the analog frequency reference from analog input terminal A1 is 80% and a gain of 50% is applied from analog input terminal A2, the resulting frequency reference will be 40% of the maximum output frequency.

Setting 2: Auxiliary reference 1

Sets the auxiliary frequency reference 1 when multi-step speed operation is selected. *Refer to Multi-Step Speed Selection on page 180* for details.

Setting 3: Auxiliary reference 2

Sets the auxiliary frequency reference 2 when multi-step speed operation is selected. *Refer to Multi-Step Speed Selection on page 180* for details.

Setting 4: Output voltage bias

Voltage bias boosts the output voltage of the V/f curve as a percentage of the maximum output voltage (E1-05). Available only when using V/f Control.

Setting 5: Accel/decel time gain

Adjusts the gain level for the acceleration and deceleration times set to parameters C1-01 through C1-08.

The acceleration time used by the drive is calculated by multiplying the this gain level to C1-☐☐ as follows:

C1-☐☐ × Accel/decel time gain = Drive accel/decel time

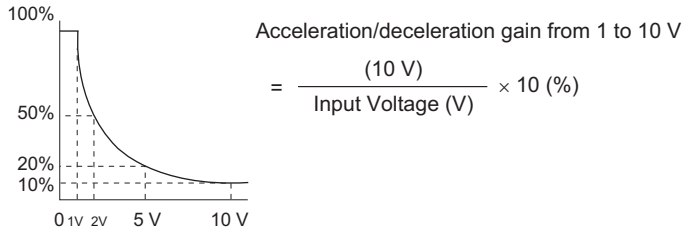

Figure 5.80 Accel/Decel Time Gain with Analog Input Terminal

Setting 6: DC Injection Braking current

The current level used for DC Injection Braking. Set as a percentage of the maximum output current using.

上正科技有限公司
購買、維修 此手冊零組件
電話： 037-466333
Email: service@repairtw.com
Line id: @zzzz
www.repairtw.com

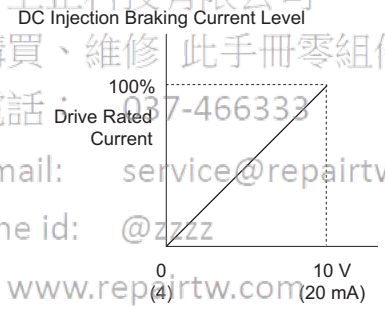

Figure 5.81 DC Injection Braking Current Using an Analog Input Terminal

Setting 7: Torque Detection level

Using this setting, the overtorque/undertorque detection level for torque detection 1 (L6-01) can be set by an analog input. The analog input will replace the level set to L6-02. An analog input of 100% (10 V or 20 mA) will set a torque detection level equal to 100% drive rated current / motor rated torque. Adjust the analog input gain if higher detection level settings are required. *Refer to L6: Torque Detection on page 264* for details on torque detection.

Setting 8: Stall Prevention level

This setting allows an analog input signal to adjust the Stall Prevention level. ***Figure 5.82*** shows the setting characteristics. The drive will use either the Stall Prevention level set to L3-06 or the level coming from the analog input terminal that has been selected, whichever value is lower.

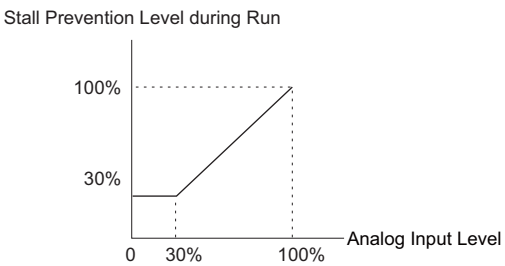

Figure 5.82 Stall Prevention During Run Using an Analog Input Terminal

Setting 9: Output frequency lower limit level

The user can adjust the lower limit of the output frequency using an analog input signal.

Setting B: PID feedback

An input set for this function supplies the PID feedback value. This setting requires PID operation to be enabled in b5-01. ***Refer to PID Feedback Input Methods on page 153***.

Setting C: PID setpoint

An input set for this function supplies the PID setpoint value, and the frequency reference selected in parameter b1-01 is no longer the PID setpoint. PID operation to be enabled in b5-01 to use this setting. ***Refer to PID Setpoint Input Methods on page 153***.

Setting D: Frequency bias

The input value of an analog input set to this function will be added to the frequency reference. This function can be used with any frequency reference source.

Setting E: Motor temperature

In addition to motor overload fault detection oL1, it is possible to use a PTC (Positive Temperature Coefficient) thermistor for motor insulation protection. Connect the PTC to analog input terminal A3, and set switch S4 on the terminal board to PTC. Refer to ***Terminal A3 Analog/PTC Input Selection on page 79*** for details on setting S4. Refer to ***Motor Protection Using a Positive Temperature Coefficient (PTC) on page 247*** for further explanation.

Setting F, 1F: Through mode

When set to F or 1F, an input does not affect any drive function, but the input level can still be read out by a PLC via a communication option or MEMOBUS/Modbus communications.

Setting 10, 11, 12, 15: Forward, Reverse, Regenerative, General torque limit (OLV, CLV, AOLV/PM, CLV/PM)

These functions can be used to set a torque limit using analog inputs for different operating conditions. Refer to ***L7: Torque Limit on page 267*** for details.

上正科技有限公司
購買、維修 此手冊零組件
電話： 037-466333
Email: service@repairtw.com
Line id: @zzzz
www.repairtw.com

Setting 13: Torque Limit Using Torque Reference/Speed Limit

When using Torque Control, an analog input programmed to this function can set the torque reference (when in Torque Control) or the torque limit (when in Speed Control). Refer to ***Setting the Torque Reference, Speed Limit, and Torque Compensation Values on page 188*** for details.

Setting 14: Torque compensation

Used to set a torque compensation value when using Torque Control. Refer to ***Setting the Torque Reference, Speed Limit, and Torque Compensation Values on page 188*** for details.

Setting 16: Differential PID Feedback

If an analog value is set for this function, the PID controller is set for differential feedback. The subtraction of the PID feedback input value and the differential feedback input value builds the feedback value that is used to calculate the PID input. ***Refer to PID Feedback Input Methods on page 153***.

Setting 30, 31, 32: DriveWorksEZ Analog Input 1, 2, 3

These settings are for functions used in DriveWorksEZ. Normally there is no need to change or apply these settings.

◆ H4: Multi-Function Analog Outputs

These parameters assign functions to analog output terminals FM and AM for monitoring a specific aspect of drive performance.

■ H4-01, H4-04: Multi-Function Analog Output Terminal FM, AM Monitor Selection

Sets the desired drive monitor parameter U□-□□ to output as an analog value via terminal FM and AM. ***Refer to U: Monitor Parameters on page 291*** for a list of all monitors. The “Analog Output Level” column indicates if a monitor can be used for analog output.

Example: Enter “103” for U1-03.

No.	Name	Setting Range	Default
H4-01	Multi-Function Analog Output Terminal FM Monitor Selection	000 to 999	102
H4-04	Multi-Function Analog Output Terminal AM Monitor Selection	000 to 999	103

A setting of 031 or 000 applies no drive monitor to the analog output. With this setting, terminal functions as well as FM and AM output levels can be set by a PLC via a communication option or MEMOBUS/Modbus (through mode).

■ H4-02, H4-03: Multi-Function Analog Output Terminal FM Gain and Bias H4-05, H4-06: Multi-Function Analog Output Terminal AM Gain and Bias

Parameter H4-02 and H4-05 set the terminal FM and AM output signal level when the value of the selected monitor is at 100%. Parameter H4-03 and H4-06 set the terminal FM and AM output signal level when the value of the selected monitor is at 0%. Both are set as a percentage, where 100% equals 10 Vdc or 20 mA analog output and 0% equals 0 V or 4 mA. The output voltage of both terminals is limited to +/-10 Vdc.

The output signal range can be selected between 0 to +10 Vdc, -10 to +10 Vdc, or 4 to 20 mA using parameter H4-07 and H4-08. ***Figure 5.83*** illustrates how gain and bias settings work.

No.	Name	Setting Range	Default
H4-02	Multi-Function Analog Output Terminal FM Gain	-999.9 to 999.9%	100.0%
H4-03	Multi-Function Analog Output Terminal FM Bias	-999.9 to 999.9%	0.0%
H4-05	Multi-Function Analog Output Terminal AM Gain	-999.9 to 999.9%	50.0%
H4-06	Multi-Function Analog Output Terminal AM Bias	-999.9 to 999.9%	0.0%

Using Gain and Bias to Adjust Output Signal Level

When viewing a gain setting parameter (H4-02 or H4-05) on the digital operator, the analog output will supply a voltage signal equal to 100% of the monitor value (including changes made from bias and gain settings). When viewing a bias setting parameter (H4-03 or H4-06), the analog output voltage will supply a signal equal to 0% monitor value.

Example 1: To have an output signal of 5 V at terminal FM when the monitored value is at 100%, set H4-02 to 50%.

Example 2: To have an output signal of 10 V at terminal FM when the monitored value is at 76.7%, set H4-02 to 150%.

上正科技有限公司
購買 維修 此手冊零組件
電話： 037-466333
Email: service@repairtw.com
Line id: @zzzz
www.repairtw.com

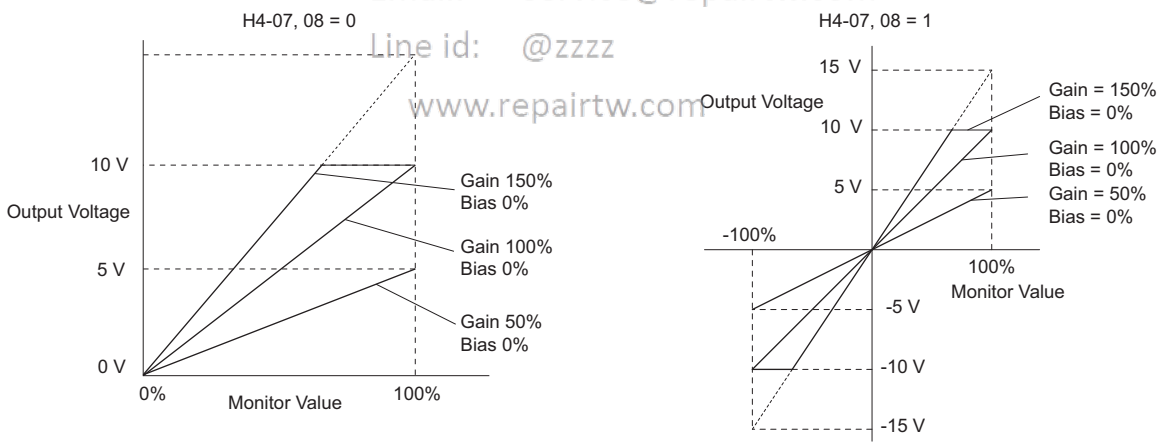

Figure 5.83 Analog Output Gain and Bias Setting Example 1 and 2

Example 3: To have an output signal of 3 V at terminal FM when the monitored value is at 0%, set H4-03 to 30%.

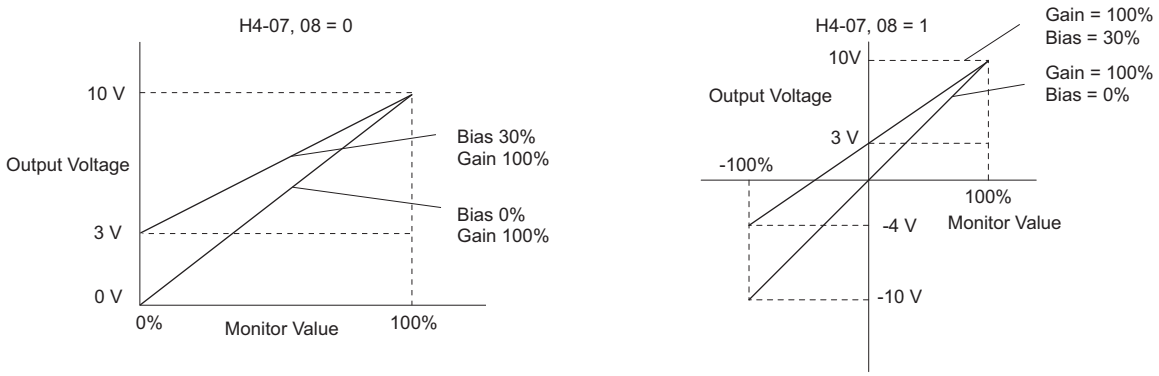

Figure 5.84 Analog Output Gain and Bias Setting Example 3

■ H4-07, H4-08: Multi-Function Analog Output Terminal FM, AM Signal Level Selection

Sets the voltage output level of U parameter (monitor parameter) data to terminal FM and terminal AM using parameters H4-07 and H4-08.

When changing the setting of these parameters make sure jumper S5 on the terminal board is set accordingly. Refer to *Terminal AM/FM Signal Selection on page 79* for details on setting S5.

No.	Name	Setting Range	Default
H4-07	Multi-Function Analog Output Terminal FM Signal Level Selection	0 to 2	0
H4-08	Multi-Function Analog Output Terminal AM Signal Level Selection	0 to 2	0

Setting 0: 0 to 10 V
Setting 1: -10 V to 10 V
Setting 2: 4 to 20 mA

上正科技有限公司
購買、維修 此手冊零組件
電話： 037-466333
Email: service@repairtw.com
Line id: @zzzz
www.repairtw.com

◆ H5: MEMOBUS/Modbus Serial Communication

Through the drives built in RS-422/485 port (terminals R+, R-, S+, S-), serial communication is possible using programmable logic controllers (PLCs) or similar devices running the MEMOBUS/Modbus protocol.

The H5-☐☐ parameters are used to set up the drive for MEMOBUS/Modbus Communications. *Refer to MEMOBUS/Modbus Serial Communication on page 482* for detailed descriptions of the H5-☐☐ parameters.

◆ H6: Pulse Train Input/Output

A one track pulse train signal with a maximum frequency of 32 kHz can be input to the drive at terminal RP. This pulse train signal can be used as the frequency reference, for PID functions, or as the speed feedback signal in V/f Control.

The pulse output monitor terminal MP can output drive monitor values as a pulse train signal with a maximum frequency of 32 kHz. It can be used in sinking or sourcing mode. *Refer to Using the Pulse Train Output on page 78* for details.

Use parameters H6-☐☐ to set the scale and other aspects of the pulse input terminal RP and pulse output terminal MP.

■ H6-01: Pulse Train Input Terminal RP Function Selection

Selects the function of pulse train input terminal RP.

No.	Name	Setting Range	Default
H6-01	Pulse Train Input Terminal RP Function Selection	0 to 3	0

Setting 0: Frequency reference

If the pulse input is set for this function and the frequency reference source is set to pulse input (b1-01, b1-15 = 4), the drive reads the frequency value from terminal RP.

Setting 1: PID feedback value

Using this setting, the feedback value for PID control can be supplied as a pulse signal at terminal RP. *Refer to b5: PID Control on page 152* for details on PID control.

Setting 2: PID setpoint value

Using this setting, the setpoint value for PID control can be supplied as a pulse signal at terminal RP. *Refer to b5: PID Control on page 152* for details on PID control.

Setting 3: Speed feedback (V/f Control with Simple Speed Feedback)

This setting can be used in V/f control to increase the speed control precision by using a motor speed feedback signal. The drive reads the speed feedback from terminal RP, compares it to the frequency reference and compensates the motor slip using a speed regulator (ASR, setup in the C5-☐☐ parameters) like shown in *Figure 5.82*. Because input terminal RP is incapable of detecting motor direction, a separate way of determining motor direction still needs to be set up:

1. **Using a Digital Input**
   If a digital input programmed for “Forward/reverse detection” (H1-☐☐ = 7E) is closed, the drive assumes reverse rotation. If open, then the drive assumes that the motor is rotating forwards.
2. **Using the Frequency Reference Direction**
   If no digital input is set to “Forward/reverse detection” (H1-☐☐ = 7E), the drive uses the direction of the frequency reference as the direction for the speed feedback detected at the pulse input.

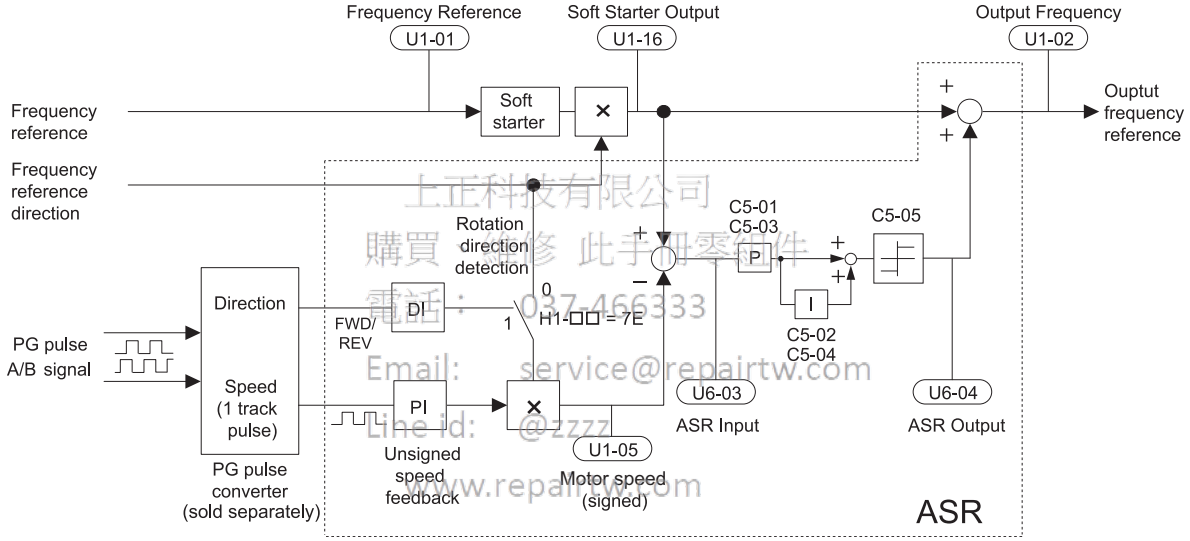

Figure 5.85 Speed Control with ASR in V/f with Simple Speed Feedback

Enabling V/f Control with Simple Speed Feedback:

1. Set the drive to V/f Control (A1-02 = 0).
2. Connect the motor speed pulse signal to the pulse input RP, set H6-01 = 3, and set the pulse signal frequency that is equal to the maximum speed to H6-02 (pulse input scaling). Make sure the pulse input bias (H6-04) is 0% and the gain (H6-03) is 100%.
3. Decide the signal used for detecting the direction. If a digital input is used, set H1-☐☐ = 7F.
4. Use the ASR gain and integral time parameters described in *C5: Automatic Speed Regulator (ASR) on page 171* for adjusting the responsiveness.

Note: 1. C5 parameters will appear when using V/f Control (A1-02 = 0) and when the pulse input RP function is set for simple PG feedback in V/f Control (H6-01 = 3).
2. If running two motors from the same drive, note that the V/f Control with simple PG feedback can be used for motor 1 only.

■ H6-02: Pulse Train Input Scaling

This parameter sets the pulse signal frequency that is equal to 100% of the input value selected in parameter H6-01.

No.	Name	Setting Range	Default
H6-02	Pulse Train Input Scaling	100 to 32000 Hz	1440 Hz

■ H6-03: Pulse Train Input Gain

Sets the level of the input value selected in H6-01 when a pulse train signal with the frequency set in H6-02 is input to terminal RP.

No.	Name	Setting Range	Default
H6-03	Pulse Train Input Gain	0.0 to 1000.0%	100.0%

■ H6-04: Pulse Train Input Bias

Sets the level of the input value selected in H6-01 when no signal (0 Hz) is input to terminal RP.

No.	Name	Setting Range	Default
H6-04	Pulse Train Input Bias	-100.0 to 100.0%	0.0%

■ H6-05: Pulse Train Input Filter Time

Sets the pulse train input filter time constant in seconds.

No.	Name	Setting Range	Default
H6-05	Pulse Train Input Filter Time	0.00 to 2.00 s	0.10 s

■ H6-06: Pulse Train Monitor Selection

Selects the monitor to output as a pulse train signal via terminal MP. Indicate which monitor to output entering the three digits in U☐-☐☐. *Refer to U: Monitor Parameters on page 291* for a complete list of monitors. Monitors that can be selected by H6-06 appear in the table below.

上正科技有限公司
購買、維修 此手冊零組件
電話： 037 466333
Email: service@repairtw.com
Line Id: @22222
www.repairtw.com

No.	Name	Setting Range	Default
H6-06	Pulse Train Monitor Selection	000 <1>, 031, 101, 102, 105, 116, 501, 502, 702 to 711, 801 to 809	102

<1> Set “000” when the terminal is not used, or when using the terminal in the through mode.

■ H6-07: Pulse Train Monitor Scaling

Pulse train monitor scaling sets the output frequency at terminal MP when the specified monitor item is at 100%. Set H6-06 to 102 and H6-07 to 0 to make the pulse train monitor output synchronous to the output frequency.

No.	Name	Setting Range	Default
H6-07	Pulse Train Monitor Scaling	0 to 32000 Hz	1440 Hz

■ H6-08: Pulse Train Input Minimum Frequency

Sets the minimum output frequency that can be detected by the pulse train input. Decreasing this setting reduces the time the drive needs to react to changes in the input signal.

- If the pulse input frequency falls below this level, the pulse input value will be 0.
- Enabled when H6-01 = 0, 1, or 2.
- When simple speed feedback in V/f Control is set as the function for terminal RP (H6-01 = 3), the minimum frequency becomes the detection time for PG disconnect (F1-14).

No.	Name	Setting Range	Default
H6-08	Pulse Train Input Minimum Frequency	0.1 to 1000.0 Hz	0.5 Hz

5.8 L: Protection Functions

◆ L1: Motor Protection

■ L1-01: Motor Overload Protection Selection

The drive has an electronic overload protection function that estimates the motor overload level based on output current, output frequency, thermal motor characteristics, and time. An oL1 fault will be triggered when motor overload is detected and drive output will be shut off.

L1-01 sets the overload protection function characteristics according to the motor being used.

No.	Name	Setting Range	Default
L1-01	Motor Overload Protection Selection	0 to 6	Determined by A1-02

Note: 1. When the motor protection function is enabled (L1-01≠ 0), an oL1 alarm can be output through one of the multi-function outputs by setting H2-01 to 1F. The output will close when the motor overload level reaches 90% of the oL1 detection level.
2. Select a method to protect the motor from overheat by setting L1-01 between 1 and 5 when running a single motor from the drive. An external thermal relay is not needed.

Setting 0: Disabled (motor overload protection is not provided)

This setting should be used if no motor overheat protection is desired or if multiple motors are connected to a single drive. In this case it is recommended that you install a thermal relay for each motor as shown in *Figure 5.86*

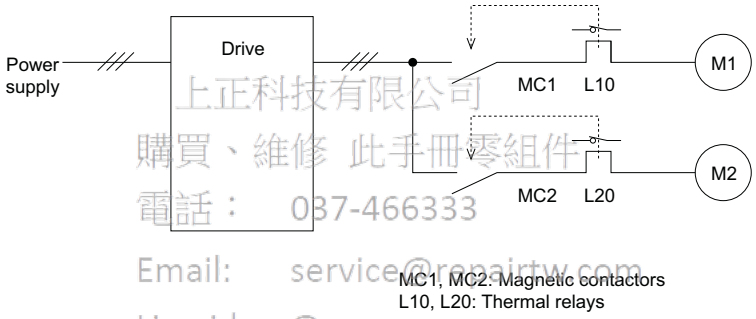

上正科技有限公司
購買、維修 此手冊零組件
電話： 037-466333
Email: service@repairtw.com
Line id: @zzzz

Figure 5.86 Example of Protection Circuit Design for Multiple Motors

NOTICE: *Thermal protection cannot be provided when running multi-motors simultaneously with the same drive, or when using motors with a current rating that is relatively high when compared with other standard motors (such as a submersible motor). Failure to comply could result in motor damage. Disable the electronic overload protection of the drive (L1-01 = "0: Disabled") and protect each motor with individual motor thermal overloads.*

NOTICE: *Close MC1 and MC2 before operating the drive. (MC1 and MC2 cannot be switched off during run.)*

Setting 1: General-purpose motor (standard self-cooled)

Because the motor is self-cooled, the overload tolerance drops when the motor speed is lowered. The drive appropriately adjusts the electrothermal trigger point according to the motor overload characteristics, protecting the motor from overheat throughout the entire speed range.

Overload Tolerance	Cooling Ability	Overload Characteristics
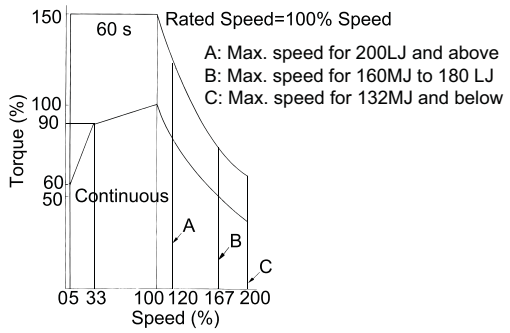	Motor designed to operate from line power. Motor cooling is most effective when running at rated base frequency (check the motor nameplate or specifications).	Continuous operation at less than line power frequency with 100% load can trigger motor overload protection (oL1). A fault is output and the motor will coast to stop.

Setting 2: Drive dedicated motor (speed range for constant torque: 1:10)

Use this setting when operating a drive duty motor that allows constant torque in a speed range of 1:10. The drive will allow the motor to run with 100% load from 10% up to 100% speed. Running at slower speeds with full load can trigger an overload fault.

Overload Tolerance	Cooling Ability	Overload Characteristics
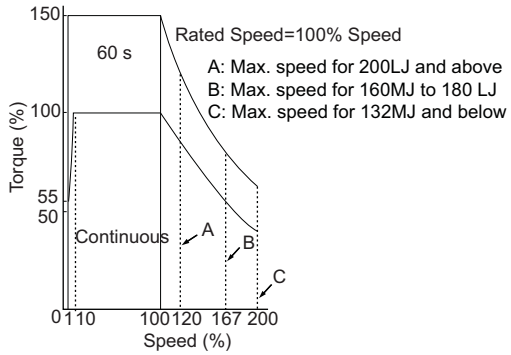	Motor is designed to effectively cool itself even at low speeds.	Continuous operation with 100% load from 5 Hz to 50 Hz.

Setting 3: Vector motor (speed range for constant torque: 1:100)

Use this setting when operating a drive-dedicated motor that allows constant torque in a speed range of 1:100. This motor type is allowed to run with 100% load from 1% up to 100% speed. Running slower speeds with full load can trigger an overload fault.

上正科技有限公司
購買、維修 此手冊零組件
電話： 037-466333
Email: service@repairtw.com
Line id: @zzzz
www.repairtw.com

Overload Tolerance	Cooling Ability	Overload Characteristics
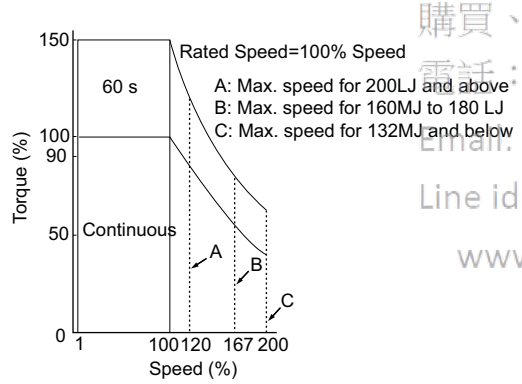	Motor is designed to effectively cool itself at ultra-low speeds.	Continuous operation with 100% load from 0.5 Hz to 50 Hz.

Setting 4: PM derated torque motor

This setting is for operating a PM motor. PM motors for derated torque have a self-cooling design, so the overload tolerance drops as the motor slows. Electronic thermal overload is triggered in accordance with the motor overload characteristics, providing overheat protection across the entire speed range.

Overload Tolerance	Cooling Ability	Overload Characteristics
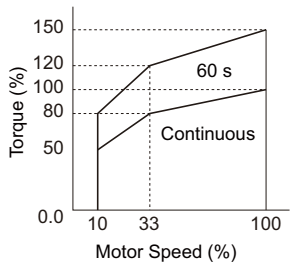	Motor is designed to produce 100% torque at base speed. Built with effective cooling capabilities.	Reaching 100% when operating at below the base frequency will cause a motor overload fault (oL1). The drive fault output closes and the motor coasts to stop.

Setting 5: Constant torque PM motors (constant torque range of 1:500)

Sets protection characteristics needed when driving a PM with constant torque. These motors allow for a speed control from 0.2% to 100% when operating with 100% load. Slower speeds with 100% load will trigger overload.

Overload Tolerance	Cooling Ability	Overload Characteristics
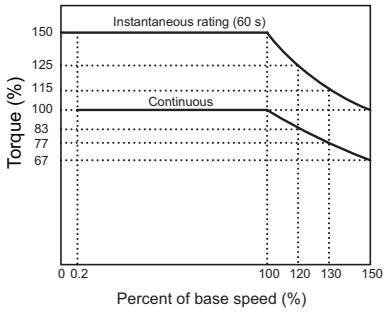	Motor is designed to effectively cool itself at ultra-low speeds (about 0.2% of base speed).	Continuous operation with 100% load from 0.2% to 100% of base speed.

Setting 6: General-purpose motor (50 Hz)

Because the motor (50 Hz) is self-cooled, the overload tolerance drops when the motor speed is lowered. The drive appropriately adjusts the electrothermal trigger point according to the motor overload characteristics, protecting the motor from overheat throughout the entire speed range.

Overload Tolerance	Cooling Ability	Overload Characteristics
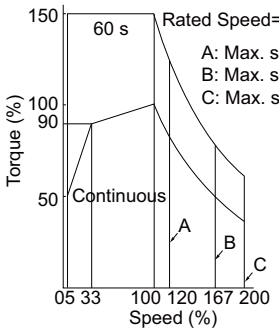	Motor designed to operate from line power. Motor cooling is most effective when running at rated base frequency (check the motor nameplate or specifications).	Continuous operation at less than line power frequency with 100% load can trigger motor overload protection (oL1). A fault is output and the motor will coast to stop.

上正科技有限公司
購買、維修 此手冊零組件
電話：
Email: service@repairtw.com
Line id: @zzzz
www.repairtw.com

■ L1-02: Motor Overload Protection Time

Sets the time it takes the drive to detect motor overheat due to overload. This setting rarely requires adjustment, but should correlate with the motor overload tolerance protection time for performing a hot start.

No.	Name	Setting Range	Default
L1-02	Motor Overload Protection Time	0.1 to 5.0 minutes	1.0 minutes

Defaulted to operate with an allowance of 150% overload operation for one minute in a hot start.

- *Figure 5.87* shows an example of the electrothermal protection operation time using a general-purpose motor operating at 50 Hz with L1-02 set to one minute.
  During normal operation, motor overload protection operates in the area between a cold start and a hot start.
  - Cold start: Motor protection operation time in response to an overload situation that was suddenly reached when starting a stationary motor.
  - Hot start: Motor protection operation time in response to an overload situation that occurred during sustained operation at rated current.

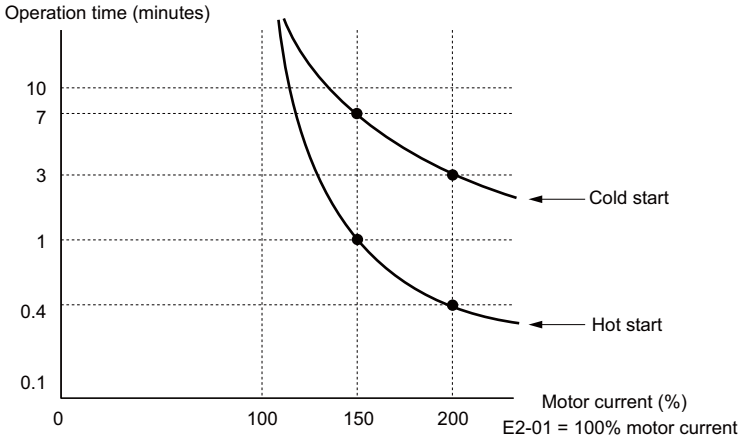

Figure 5.87 Motor Protection Operation Time

■ Motor Protection Using a Positive Temperature Coefficient (PTC)

A motor PTC can be connected to an analog input of the drive. This input is used by the drive for motor overheat protection.

When the motor overheat alarm level is reached, an oH3 alarm will be triggered and the drive will continue operation as selected in L1-03. When the overheat fault level is reached, an oH4 fault will be triggered, a fault signal will be output, and the drive will stop the motor using the stop method determined in L1-04.

Connect the PTC between terminals AC and A3 and set jumper S4 on the terminal board to “PTC” like shown in ***Figure 5.88***. Set parameter H3-05 to 0 and parameter H3-06 to E.

上正科技有限公司
購買、維修 此手冊零組件
電話： 037-466333
Email: service@repairtw.com
Line id: @xxzz
www.repairtw.com

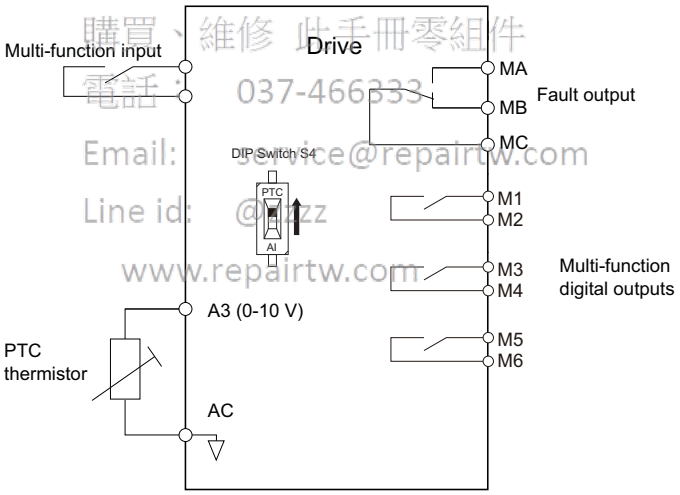

Figure 5.88 Connection of a Motor PTC

The PTC must have the following characteristics for one motor phase. The drives motor overload detection expects 3 of these PTCs to be connected in series.

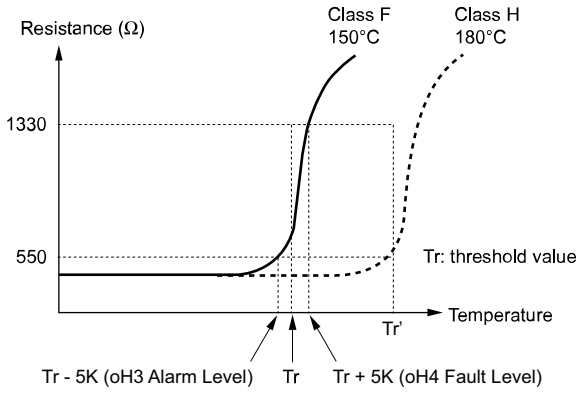

Figure 5.89 Motor PTC Characteristics

Overheat detection using a PTC can be set up by parameters L1-03, L1-04, and L1-05 as explained below.

■ L1-03: Motor Overheat Alarm Operation Selection (PTC input)

Sets the drive operation when the PTC input signal reaches the motor overheat alarm level (oH3).

No.	Name	Setting Range	Default
L1-03	Motor Overheat Alarm Operation Selection (PTC input)	0 to 3	3

Setting 0: Ramp to stop

The drive stops the motor using the deceleration time 1 set in parameter C1-02.

Setting 1: Coast to stop

The drive output is switched off and the motor coasts to stop.

Setting 2: Fast Stop

The drive stops the motor using the Fast Stop time set in parameter C1-09.

Setting 3: Alarm only

The operation is continued and an oH3 alarm is displayed on the digital operator.

■ L1-04: Motor Overheat Fault Operation Selection (PTC input)

Sets the drive operation when the PTC input signal reaches the motor overheat fault level (oH4).

No.	Name	Setting Range	Default
L1-04	Motor Overheat Fault Operation Selection (PTC input)	0 to 2	1

Setting 0: Ramp to stop

The drive stops the motor using the deceleration time 1 set in parameter C1-02.

Setting 1: Coast to Stop

The drive output is switched off and the motor coasts to stop.

Setting 2: Fast Stop

The drive stops the motor using the Fast Stop time set in parameter C1-09.

上正科技有限公司
購買 維修 找手冊 零組件
電話： 037-466333
Email: service@repairtw.com
Line id: @zzzz
www.repairtw.com

■ L1-05: Motor Temperature Input Filter Time (PTC input)

Used to set a filter on the PTC input signal in order to prevent a motor overheat fault from being mistakenly detected.

No.	Name	Setting Range	Default
L1-05	Motor Temperature Input Filter Time (PTC input)	0.00 to 10.00 s	0.20 s

■ L1-13: Continuous Electrothermal Operation Selection

Determines whether or not to hold the current value of the electrothermal motor protection (L1-01) when the power supply is interrupted.

No.	Name	Setting Range	Default
L1-13	Continuous Electrothermal Operation Selection	0 or 1	1

Setting 0: Disabled

Setting 1: Enabled

◆ L2: Momentary Power Loss Ride-Thru

■ L2-01: Momentary Power Loss Operation Selection

When a momentary power loss occurs (DC bus voltage falls below the level set in L2-05), the drive can be set to automatically return to the operation it was performing when the power went out based on certain conditions.

No.	Name	Setting Range	Default
L2-01	Momentary Power Loss Operation Selection	0 to 5	0

Setting 0: Disabled (default)

If power is not restored within 15 ms, a Uv1 fault will result and the drive will stop the motor. The motor coasts to stop.

Setting 1: Recover within L2-02

When a momentary power loss occurs, the drive output will be shut off. Should the power return within the time set to parameter L2-02, the drive will perform Speed Search and attempt to resume operation. If power is not restored within this time (i.e., DC bus voltage level remains below Uv1 detection level L2-05), then a Uv1 fault is triggered.

Setting 2: Recover as long as CPU has power

When a momentary power loss occurs, the drive output will be shut off. Should the power return as long as the drive control circuit has power, the drive will attempt to perform Speed Search and resume the operation. A Uv1 fault is not triggered.

Setting 3: KEB Ride-Thru operation within L2-02

The drive decelerates using regenerative energy from the motor until the time set in L2-02 has expired. It then tries to accelerate back to the frequency reference. If the power does not returned within the time set in L2-02, an Uv1 fault is triggered and the drive output shuts off. The type of KEB operation is determined by the setting of L2-29.

Setting 4: KEB Ride-Thru as long as CPU has power

The drive decelerates using regenerative energy from the motor until the power returns and then restarts. If the motor has come to a stop before, the power returns. If the drive control power gets lost, the drive output will shut off. A Uv1 fault is not triggered. The type of KEB operation is determined by the setting of L2-29.

Setting 5: Ramp to stop with KEB deceleration

The drive ramps to stop using the regenerative energy from the motor. Even if the power is restored, the drive will continue decelerating until it brings the motor to a complete stop. The type of KEB operation is determined by the setting of parameter L2-29. Note that if an input terminal set for KEB 1 (H1-☐☐ = 65, 66) is triggered while the drive is decelerating, then it will accelerate back up to speed when the input is released.

Notes on Settings 1 through 5

- "Uv" will flash on the operator while the drive is attempting to recover from a momentary power loss. A fault signal is not output at this time.
- A Momentary Power Loss Unit is available to allow for a longer momentary power loss ride through time in the drive model CIMR-A☐2A0004 through 2A0056 and CIMR-A☐4A0002 through 4A0031. This option makes it possible to continue running after up to two seconds of power loss.
- When a magnetic contactor between motor and drive is used, be sure that the magnetic contactor remains closed as long as the drive performs KEB operation or attempts to restart with Speed Search.
- Make sure the Run command is kept active during KEB operation. Otherwise the drive cannot accelerate back to the frequency reference when the power returns.
- When L2-01 is set to 3, 4, or 5, KEB Ride-Thru will be executed as specified in L2-29.

■ KEB Ride-Thru Function

When power loss is detected, the Kinetic Energy Backup Ride-Thru function (KEB Ride-Thru) decelerates the motor and uses regenerative energy to keep the main circuit operating. Despite power loss, the drive output is not interrupted.

For applications driven by a single drive, choose between Single Drive KEB Ride-Thru 1 and 2 (L2-29 = 0 or 1).

For applications where multiple drives have to perform KEB operation while keeping a certain speed ratio (such as textile machinery), select between System KEB Ride-Thru 1 and 2, (L2-29 = 2 or 3).

上非科技有限公司
購買、維修 此手冊零組件
電話： 037-486333
Email: service@repairtw.com
Line Id: @zzzz
www.repairtw.com

Single Drive KEB Ride-Thru 1 (L2-29 = 0)

Once KEB Ride-Thru begins, the drive uses regenerative energy from the motor to keep the DC bus voltage at the level set to L2-11 while adjusting the rate of deceleration based on the time set to L2-06.

Note: If undervoltage occurs in the DC bus (Uv1), shorten the KEB deceleration time (L2-06). If overvoltage occurs (oV), increase the KEB deceleration time.

Single Drive KEB Ride-Thru 2 (L2-29 = 1)

The drive uses information about the inertia of the connected machinery to determine the deceleration rate necessary to keep the DC bus voltage at the level set in parameter L2-11. The resulting deceleration time is calculated based on the system inertia and cannot be adjusted.

System KEB Ride-Thru 1 (L2-29 = 2)

Drive decelerates at the KEB deceleration time set to L2-06. L2-06 is the time required decelerate from the current frequency reference to 0. Using this setting, multiple drives can decelerate while still keeping the speed ratio between those drives constant. The voltage level in the DC bus is disregarded when using this function. Braking resistor option required.

System KEB Ride-Thru 2 (L2-29 = 3)

Drive decelerates based on the KEB deceleration time set to L2-06 while monitoring the DC bus voltage. If the voltage level rises, the drive briefly holds the frequency before continuing to decelerate again.

■ KEB Ride-Thru Start

KEB operation is always triggered in the same way, independent of the selected KEB operation mode. When the KEB function is selected as the function to be executed when power loss operation occurs (L2-01 = 3, 4, or 5), then KEB Ride-Thru will be activated if one of the following conditions becomes true:

- A digital input programmed for H1-□□ = 65 or 66 is activated. This will start KEB operation using the mode selected in parameter L2-29.
- A digital input programmed for H1-□□ = 7A or 7B is activated. This will automatically select Single KEB Ride-Thru 2, disregarding the setting of L2-29.
- The DC bus voltage fell below the level specified in L2-05. The KEB operation will start as specified in L2-29.

Note: KEB Ride-Thru 1 and 2 cannot both be assigned to input terminals at the same time. Attempting this will trigger an oPE3 error.

工正科技有限公司
購買、維修 此手冊零組件
電話： 037-466395
Email: service@gpictw.com
Line id: @zzzz
www.gpictw.com

If a digital input is used for triggering the KEB operation and the device that controls the input acts relatively slow, parameter L2-10 can be used to set a minimum KEB operation time. In the example below, KEB operation is triggered by the DC bus voltage and the Hold command is triggered by a digital input.

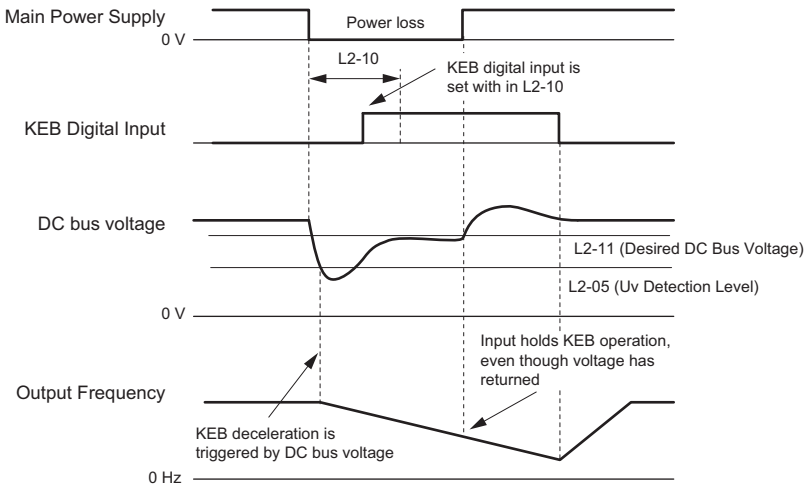

Figure 5.90 KEB Operation Using a KEB Input

■ KEB Ride-Thru End Detection

The KEB function end detection depends on the setting of parameter L2-01 and if a digital input programmed for KEB (H1-□□ = 65, 66, 7A, 7B) is used or not.

KEB Ride-Thru Operation in L2-02, Input Terminals Not Used

Here, L2-01 = 3 and the input terminals have not been set for KEB Ride-Thru (H1-□□ does not equal 65, 66, 7A, 7B). After decelerating for the time set in parameter L2-02, the drive ends KEB operation and attempts to accelerate back to the frequency reference. If the power has not returned within L2-02, an Uv1 fault occurs and the drive output shuts off.

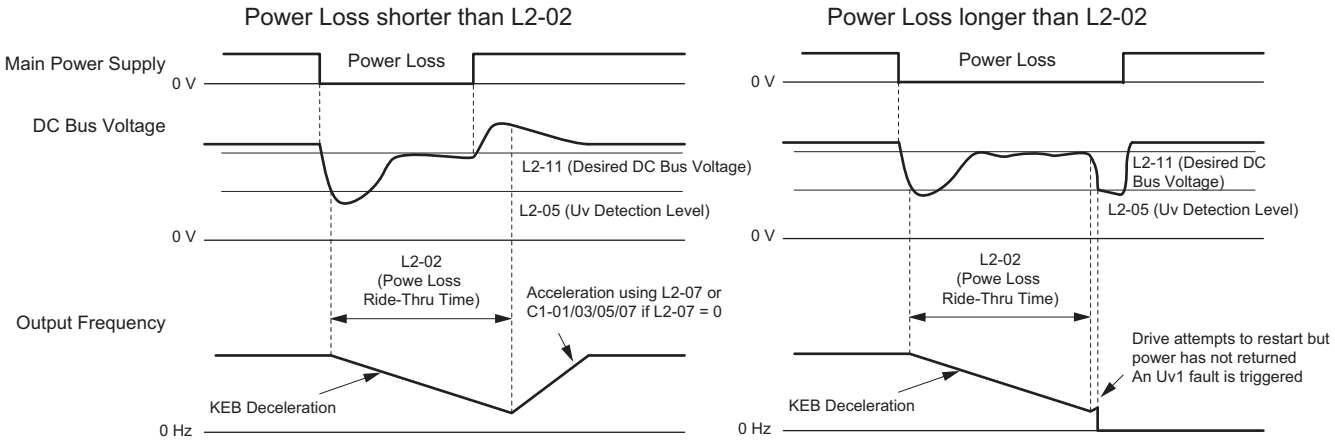

Figure 5.91 KEB Operation Using L2-02, Without KEB Input

KEB Ride-Thru Operation Within L2-02, Input Terminals Used

Here, L2-01 = 3 and an input terminal is set to issue KEB Ride-Thru (H1-□□ = 65, 66, 7A, 7B). After decelerating for the time set in parameter L2-02, the drive checks the DC bus voltage and the status of the digital input. If the DC bus voltage is still below the level set in L2-11 or if the KEB digital input is still active, KEB deceleration continues. If the voltage level has risen above the value set to L2-11, then normal operation is resumed.

Note: The time set in L2-02 has priority over L2-10. Even if L2-10 is set to a longer time than L2-02, once the time in L2-02 passes, the drive will check the DC bus voltage level and the status of the terminal assigned to KEB Ride-Thru, then try to restart.

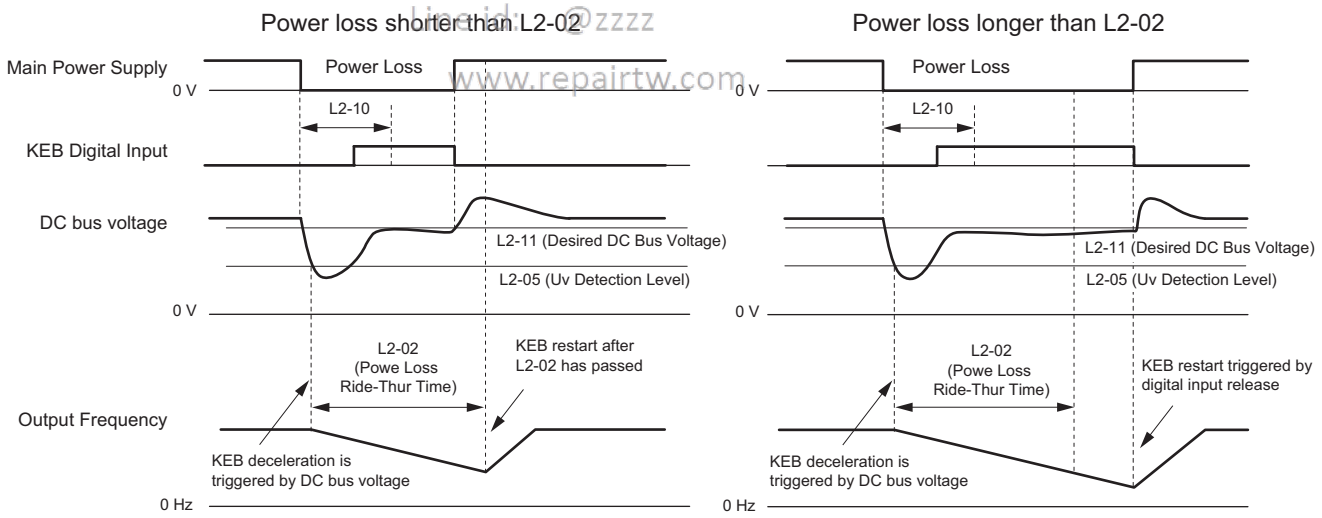

Figure 5.92 KEB Operation Using L2-02 and KEB Input

KEB Ride-Thru Operation as Long as CPU Has Power, KEB Input Not Used

Here, L2-01 = 4 and the input terminals have not been set for KEB Ride-Thru (H1-□□ does not equal 65, 66, 7A, 7B). After decelerating for the time set in parameter L2-10, the drive checks the DC bus voltage level. If the DC bus voltage is lower than the level set in L2-11, then deceleration continues. Once the DC bus voltage rises above the value of L2-11, normal operation is resumed.

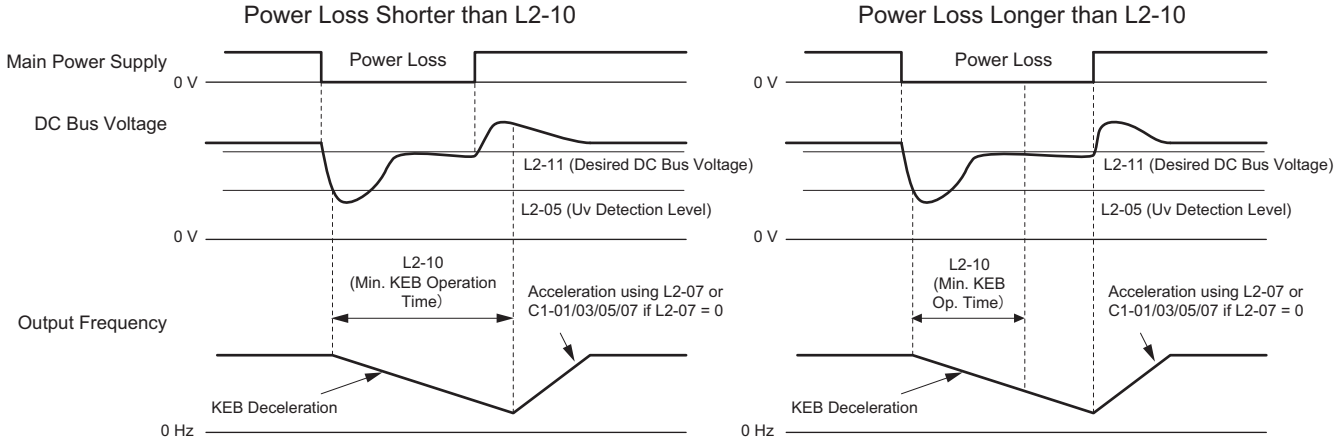

Figure 5.93 KEB Operation Using L2-10, Without KEB Input

KEB Ride-Thru Operation as Long as CPU Has Power, KEB Input Used

Here, L2-01 = 3 and an input terminal is set to issue KEB Ride-Thru (H1-□□ = 65, 66, 7A, 7B). After decelerating for the time set in parameter L2-10, the drive checks the DC bus voltage and the status of the digital input. If the DC bus voltage is still below the level set in L2-11 or if the digital input assigned to KEB Ride-Thru is still active, then the drive continues to decelerate. If the DC bus voltage has risen above L2-11 and the terminal that initiated KEB Rid-Thru is released, then operation resumes.

止旺科技有限公司
購買、維修 此手冊零組件
電話： 037-466333
Email: service@repairtw.com
Line id: @zzzz
www.repairtw.com

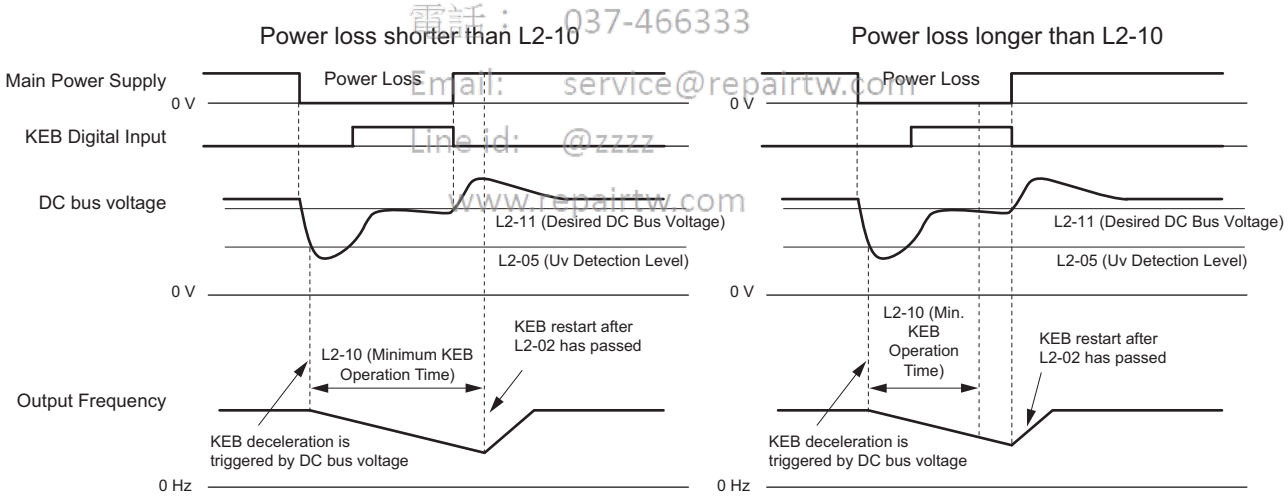

Figure 5.94 KEB Operation Using L2-10 and KEB Input

L2-01 = 5

KEB operation ends when the motor has come to a stop, even if the power returns and the digital input terminal that initiated KEB Ride-Thru is cleared.

■ KEB Operation Wiring Example

Figure 5.95 shows a wiring example for triggering the KEB Ride-Thru at power loss using an undervoltage relay. If power loss occurs, the undervoltage relay triggers KEB Ride-Thru at terminal S6 (H1-06 = 65, 66, 7A, 7B). Note that an additional dynamic braking option is required if System KEB Ride-Thru 1 is used.

Note: **1.** Make sure the Run command is not switched off during momentary power loss. If the Run command is shut off, the drive will not accelerate back to speed when the power is restored.
2. A dynamic braking option is required in order to use System KEB 1 (L2-29 = 2).

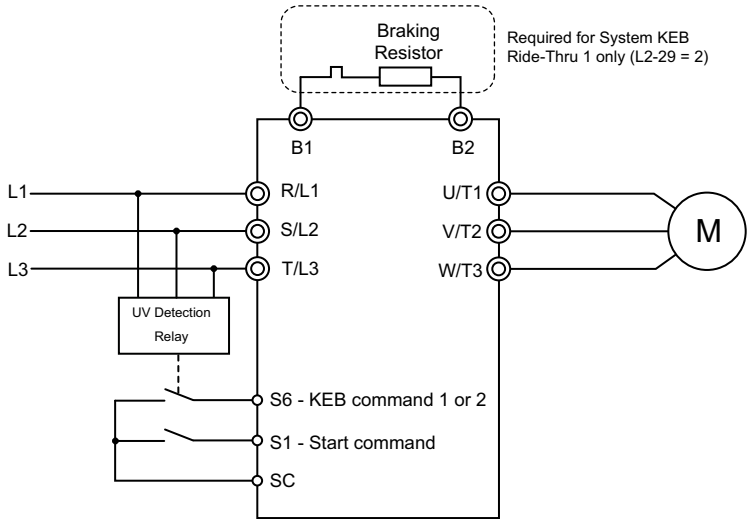

Figure 5.95 KEB Function Wiring Example

■ Parameters for KEB Ride-Thru

上正科技有限公司
購買、維修、此手冊零組件
電話：037-466333
Email: service@repairtw.com
Line id: @zzzz
www.repairtw.com

Table 5.40 lists parameters needed to set up KEB Ride-Thru depending the type of KEB Ride-Thru selected in L2-29.

Table 5.40 KEB Function Related Adjustments

Parameter	Name	Setting Instructions	KEB Mode (L2-29)			
			0	1	2	3
C1-09	Fast Stop Time	• Increase if an overvoltage fault (ov) occur during KEB deceleration. • Decrease if an undervoltage fault (Uv1) occurs during KEB deceleration.	YES	NO	NO	NO
C2-03	S-Curve at Deceleration Start	• Shorten if undervoltage (Uv1) occurs right after KEB Ride-Thru is triggered. • Lengthen this setting if overvoltage occurs right after KEB operation starts.	YES	NO	YES	YES
L2-05	Undervoltage Detection Level	Increase if an undervoltage fault (Uv1) fault occurs at KEB operation start in order to let the drive detect power loss more quickly.	YES	YES	YES	YES
L2-06	KEB Deceleration Time	• Increase if an overvoltage fault (ov) occur during KEB deceleration • Decrease if an undervoltage fault (Uv1) occurs during KEB deceleration	NO	NO	YES	YES
L2-07	KEB Acceleration Time	Adjust to the desired acceleration time. If set to 0, standard acceleration times are used (C1-01, C1-03, C1-05, C1-07).	YES	YES	YES	YES
L2-08	Frequency Gain at KEB Start	• Increase if an undervoltage fault occurs right after KEB operation starts. • Decrease if an overvoltage fault occurs right after KEB operation starts.	YES	NO	YES	YES
L2-10	KEB Detection Time	• Increase when a digital input is set for KEB Ride-Thru and an undervoltage fault occurs after power was lost because the device that controls the input does not react quickly enough. • If the DC bus voltage overshoots after KEB Ride-Thru begins (and no input terminal is set to KEB Ride-Thru), increase L2-10 to longer than the overshoot.	YES	YES	YES	YES
L2-11	Desired DC Bus Voltage during KEB	• Set to around 1.22 times the input voltage for Single Drive KEB Ride-Thru 2. • Set to around 1.4 times the input voltage for Single Drive KEB Ride-Thru 1 and System KEB Ride-Thru modes.	YES	YES	YES	YES
L3-20	Main Circuit Adjustment Gain	• Increase this setting slowly in steps of 0.1 if overvoltage (ov) or undervoltage (Uv1) occurs at the beginning of deceleration • Reduce if torque ripple occurs during deceleration while executing KEB Ride-Thru.	NO	YES	NO	NO
L3-21	Accel/Decel Rate Calculation Gain	• Reduce L3-21 in steps of 0.05 if there is a fairly large speed or current ripple. • Decreasing this setting too much can result in a slow DC bus voltage control response, and may lead to problems with overvoltage or undervoltage.	NO	YES	NO	NO
L3-24	Motor Acceleration Time	Set the motor acceleration time as described on page *261*.	NO	YES	NO	NO
L3-25	Load Inertia Ratio	Set the load/inertia ratio as described on page *261*.	NO	YES	NO	NO

■ L2-02: Momentary Power Loss Ride-Thru Time

Sets the maximum time allowed to ride through a power loss. If power loss operation exceeds this time, the drive will attempt to accelerate back to frequency reference. This parameter is valid if L2-01 = 1 or 3.

Note: **1.** The amount of time the drive is capable of recovering after a power loss is determined by the capacity of the drive. Drive capacity determines the upper limit for L2-02.

No.	Name	Setting Range	Default
L2-02	Momentary Power Loss Ride-Thru Time	0.0 to 25.5 s	Determined by C6-01 and o2-04

■ L2-03: Momentary Power Loss Minimum Baseblock Time

Sets the minimum baseblock time when power is restored following a momentary power loss. This determines the time the drive waits for the residual voltage in the motor to dissipate. Increase this setting if overcurrent or overvoltage occurs at the beginning of Speed Search, after a power loss, or during DC Injection Braking.

No.	Name	Setting Range	Default
L2-03	Momentary Power Loss Minimum Baseblock Time	0.1 to 5.0 s	Determined by C6-01 and o2-04

■ L2-04: Momentary Power Loss Voltage Recovery Ramp Time

Sets the time for the drive to restore the output voltage to the level specified by the V/f pattern after Speed Search. The setting value determines the time for the voltage to go from 0 V to the maximum voltage.

No.	Name	Setting Range	Default
L2-04	Momentary Power Loss Voltage Recovery Ramp Time	0.0 to 5.0 s	Determined by C6-01 and o2-04

上正科技有限公司
購買 維修 此手冊零組件
電話： 037-466333
Email: service@repairtw.com
Line id: @zzzz
www.repairtw.com

■ L2-05: Undervoltage Detection Level (Uv)

Determines the voltage at which a Uv1 fault is triggered or at which the KEB function is activated. This setting rarely needs to be changed.

No.	Name	Setting Range	Default
L2-05 <1>	Undervoltage Detection Level	150 to 210 Vdc	Determined by A1-02, C6-01, E1-01 and o2-04 <2>

<1> Values are for 200 V class drives and must be doubled for 400 V class drives.
<2> The default setting for 400 V class drives will vary depending on if the drive input voltage is over or under 400 V.

Note: **1.** When setting L2-05 below the default value, an AC reactor option should be installed to the input side of the power supply to prevent damage to drive circuitry.
2. If using KEB Ride-Thru and L2-05 is set too low, then undervoltage in the DC bus (uv1) will be triggered before KEB Ride-Thru can be executed. Take caution not to set this value too low.

■ L2-06: KEB Deceleration Time

Sets the time to decelerate from the frequency reference at the time KEB Ride-Thru was initiated down to zero speed. This setting can be used for System KEB Ride-Thru only.

No.	Name	Setting Range	Default
L2-06	KEB Deceleration Time	0.00 to 6000.0 s <1>	0.00 s

<1> Setting range is determined by the accel/decel time units set in C1-10. If the time is set in units of 0.01 s (C1-10 = 0), the setting range becomes 0.00 to 600.00 s.

■ L2-07: KEB Acceleration Time

Sets the time to reaccelerate from the speed when KEB was deactivated to the frequency reference.

When set to 0.0 s, the drive will accelerate back up to speed according to the active deceleration time set by C1-01, C1-03, C1-05, or C1-07.

No.	Name	Setting Range	Default
L2-07	KEB Acceleration Time	0.00 to 6000.0 s <1>	0.00 s

<1> Setting range is determined by the accel/decel time units set in C1-10. If the time is set in units of 0.01 s (C1-10 = 0), the setting range becomes 0.00 to 600.00 s.

■ L2-08: Frequency Gain at KEB Start

When the KEB Ride-Thru command is input, the output frequency is reduced in a single step in order to quickly get the motor into a regenerative state. The amount of this frequency reduction can be calculated using the formula below. Note that L2-08 can only be used with induction motors.

Amount of reduction = Slip frequency prior to KEB × (L2-08) × 2

No.	Name	Setting Range	Default
L2-08	Frequency Gain at KEB Start	0 to 300%	100%

■ L2-10: KEB Detection Time (Minimum KEB Time)

Parameter L2-10 determines how long KEB Ride-Thru must operate once it is triggered. Also refer to *KEB Ride-Thru End Detection on page 251*.

No.	Name	Setting Range	Default
L2-10	KEB Detection Time	0 to 2000 ms	50 ms

■ L2-11: DC Bus Voltage Setpoint during KEB

Determines the setpoint (target value) for the DC bus voltage during Single KEB Ride-Thru 2. For Single KEB Ride-Thru 1 and System KEB Ride-Thru, parameter L2-11 defines the voltage level to end KEB Ride-Thru.

No.	Name	Setting Range	Default
L2-11	DC Bus Voltage Setpoint during KEB	150 to 400 Vdc <1>	<2>

<1> Values are for 200 V class drives and must be doubled for 400 V class drives.
<2> Default setting is determined by E1-01.

[illegible]科技有限公司
購買、維修 此手冊零組件
電話： 037-466333
Email: service@repairtw.com
Line id: @zzzz
www.repairtw.com

■ L2-29: KEB Method Selection

Selects the way the Kinetic Energy Buffering function operates.

Note: If a multi function input is set for Single KEB Ride-Thru 2 (H1-☐☐ = 7A, 7B) the setting of L2-29 is disregarded and the KEB mode equal to L2-29 = 1 is automatically selected.

No.	Name	Setting Range	Default
L2-29	KEB Method Selection	0 to 3	0

Setting 0: Single Drive KEB Ride-Thru 1
Setting 1: Single Drive KEB Ride-Thru 2
Setting 2: System KEB Ride-Thru 1
Setting 3: System KEB Ride-Thru 2

Refer to *KEB Ride-Thru Function on page 249* for detailed explanations.

◆ L3: Stall Prevention

When the load is too high or acceleration and deceleration times are too short, the motor may be unable to keep up with the frequency reference, resulting in excessive slip. During acceleration, this usually causes an overcurrent fault (oC), drive overload (oL2), or motor overload (oL1). During deceleration, it can cause excessive regenerative power to flow back into the DC bus capacitors, eventually causing the drive to fault out from overvoltage (oV). The drive can prevent the motor from stalling and still reach the desired speed without the user needing to change the acceleration or deceleration time settings. The Stall Prevention function can be set separately for acceleration, operating at constant speeds, and deceleration.

■ L3-01: Stall Prevention Selection during Acceleration

Stall Prevention during acceleration (L3-01) prevents tripping with overcurrent (oC), motor overload (oL1), or drive overload (oL2) faults common when accelerating with heavy loads.
L3-01 determines the type of Stall Prevention the drive should used during acceleration.

No.	Name	Setting Range	Default
L3-01	Stall Prevention Selection during Acceleration	0 to 2 <1>	1

<1> Setting 2 is not available for PM OLV.

Setting 0: Disabled

No Stall Prevention is provided. If the acceleration time is too short, the drive may not be able to get the motor up to speed fast enough, thus tripping an overload fault.

Setting 1: Enabled

Enables Stall Prevention during acceleration. Operation varies, depending on the control mode.

- V/f Control, V/f Control with PG, and Open Loop Vector Control:
  If the output current rises above the Stall Prevention level set in L3-02, then the drive stops accelerating. Acceleration will not resume until the output current falls 15% below the setting in L3-02.
  The Stall Prevention level is automatically reduced in the constant power range. *Refer to L3-03: Stall Prevention Limit during Acceleration on page 257*.

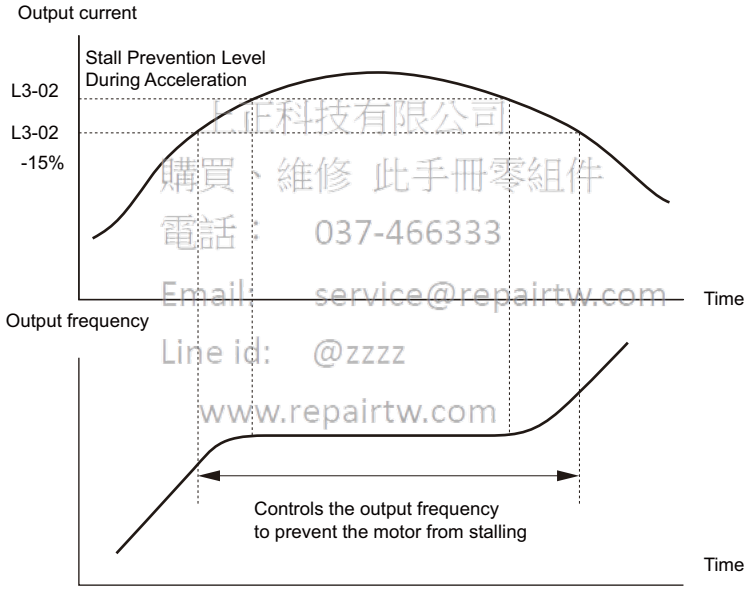

Figure 5.96 Stall Prevention During Acceleration for Induction Motors

- Open Loop Vector Control for PM:
  If the output current remains above the Stall Prevention level set in L3-02 for the time set in L3-27, then the drive will begin to decelerate using the deceleration time set in L3-22. (*Refer to L3-22: Deceleration Time at Stall Prevention during Acceleration on page 257*.) Acceleration will not resume until the output current falls 15% below the setting in L3-02.

此手冊科技有限公司
購買、維修 此手冊零組件
電話： 037-466333
Email: service@repairtw.com
Line id: @zzzz
www.repairtw.com

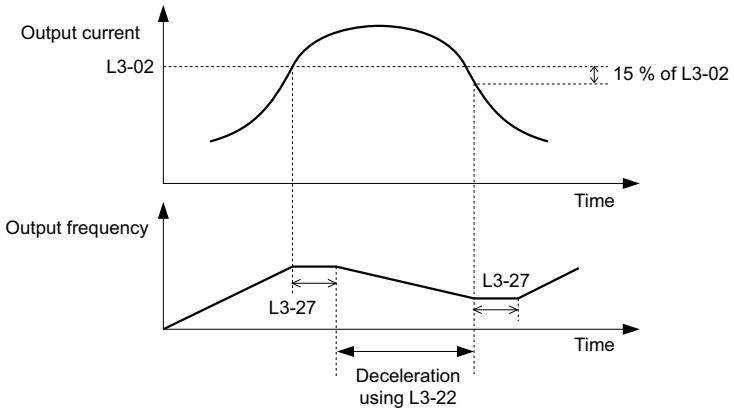

Figure 5.97 Stall Prevention During Acceleration for Permanent Magnet Motors

Setting 2: Intelligent Stall Prevention

When L3-02 = 2, the drive will disregard the selected acceleration time and try to accelerate in the minimum time. The acceleration rate is adjusted so that the current does not exceed the value set in parameter L3-02.

■ L3-02: Stall Prevention Level during Acceleration

Sets the output current level at which the Stall Prevention during acceleration is activated.

No.	Name	Setting Range	Default
L3-02	Stall Prevention Level during Acceleration	0 to 150% <1>	<1>

<1> The upper limit and default value is determined by the duty rating and the carrier frequency derating selection (C6-01 and L8-38 respectively).

上正科技有限公司
購買、維修 此手冊零組件
電話：0277xxxxxx
Email: service@repairtw.com
Line id: @2zzz
www.repairtw.com

- Stalling may occur when the motor is rated at a smaller capacity than the drive and the Stall Prevention default settings are used. Set L3-02 as appropriate if stalling occurs.
- When operating the motor in the constant power range, also set parameter L3-03.

■ L3-03: Stall Prevention Limit during Acceleration

The Stall Prevention level is automatically reduced when the motor is operated in the constant power range. L3-03 sets the lower limit for this reduction as a percentage of the drive rated current.

No.	Name	Setting Range	Default
L3-03	Stall Prevention Limit during Acceleration	0 to 100%	50%

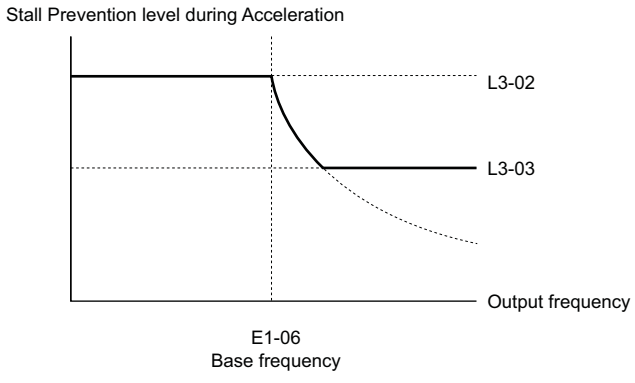

Figure 5.98 Stall Prevention Level and Limit During Acceleration

■ L3-22: Deceleration Time at Stall Prevention during Acceleration

Sets the brief deceleration time used when stalling occurs while accelerating a PM motor. When set to 0, this function is disabled and the drive will decelerate at the selected deceleration time when stalling occurs.

The function is effective only in Open Loop Vector Control for PM motors and if parameter L3-01 is set to 1.

No.	Name	Setting Range	Default
L3-22	Deceleration Time at Stall Prevention During Acceleration	0 to 6000.0 s	0.0 s

■ L3-04: Stall Prevention Selection during Deceleration

Stall Prevention during deceleration can control the deceleration based on the DC bus voltage and prevent an overvoltage fault caused by high inertia or rapid deceleration.

No.	Name	Setting Range	Default
L3-04	Stall Prevention Selection During Deceleration	0 to 5 <1>	1

<1> Settings 3 through 5 are not available in OLV/PM. Settings 2 through 5 are not available in AOLV/PM and CLV/PM.

Setting 0: Disabled

When this setting is used, the drive decelerates according to the set deceleration time. With high inertia loads or rapid deceleration, an overvoltage (ov) fault may occur. In this case use dynamic braking options or switch to another L3-04 selection.

Setting 1: General-purpose Stall Prevention

With this setting the drive tries to decelerate within the set deceleration time. When the DC bus voltage exceeds the Stall Prevention level, the drive pauses deceleration. Deceleration continues as soon as the DC bus voltage drops below that level. Stall Prevention may be triggered repeatedly to avoid an overvoltage fault. The DC bus voltage level for Stall Prevention depends on the input voltage setting E1-01.

Drive Input Voltage	Stall Prevention Level during Deceleration
200 V Class	377 Vdc
400 V Class	754 Vdc

Note: **1.** This setting should not be used in combination with a Dynamic Braking Resistor or other dynamic braking options. If Stall Prevention during deceleration is enabled, it will be triggered before the braking resistor option can operate.

2. This method may lengthen the total deceleration time compared to the set value. If this is not appropriate for the application consider using a dynamic braking option.

上正科技有限公司
購買、維修此手冊零組件
電話： 037-466333
Email: service@repairtw.com
Line id: @zzz
www.repairtw.com

Figure 5.99 illustrates the function of Stall Prevention during deceleration.

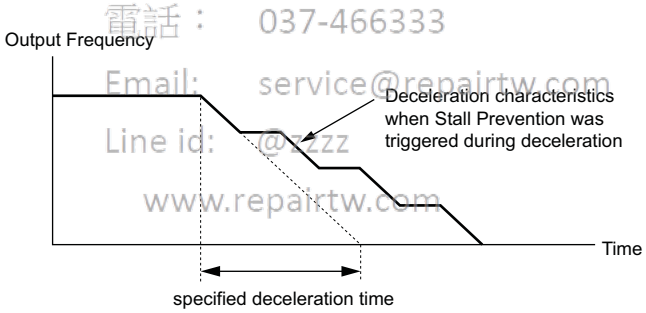

Figure 5.99 Stall Prevention During Deceleration

Setting 2: Intelligent Stall Prevention

With this setting, the drive adjusts the deceleration rate so that the DC bus voltage is kept at the level set in parameter L3-17. This way the shortest possible deceleration time is achieved while the motor is protected from stalling. The deceleration time that has been selected is disregarded, but the achievable deceleration time cannot be smaller than 1/10 of the set deceleration time.

This function uses the following parameters for adjusting the deceleration rate:

- DC bus voltage gain (L3-20)
- Deceleration rate calculations gain (L3-21)
- Inertia calculations for motor acceleration time (L3-24)
- Load inertia ratio (L3-25)

Note: As the deceleration time is not constant, Intelligent Stall Prevention should not be used in applications where stopping accuracy is a concern. Use dynamic braking options instead.

Setting 3: Stall Prevention with dynamic braking option

Enables the Stall Prevention function while using a dynamic braking resistor. Overvoltage problems in the DC bus can occur if Stall Prevention during deceleration is disabled (L3-04) in OLV and a dynamic braking option is installed. Set L3-04 to 3 to remedy this situation.

Setting 4: Overexcitation Deceleration 1

Overexcitation Deceleration 1 (increasing the motor flux) is faster than deceleration with no Stall Prevention (L3-04 = 0). Refer to *Overexcitation Deceleration (Induction Motors) on page 277* for details.

Setting 5: Overexcitation Deceleration 2

Overexcitation Deceleration 2 slows down the motor while trying to maintain the DC bus voltage at the level set in parameter L3-17. By doing this, the achievable deceleration time can even be shorter than with Overexcitation Deceleration 1. Refer to *Overexcitation Deceleration (Induction Motors) on page 277* for details.

■ L3-05: Stall Prevention Selection during Run

Stall Prevention during run can prevent a motor from stalling by automatically reducing the speed when a transient overload occurs while the motor is running at constant speed.

This parameter determines how Stall Prevention works during run.

No.	Name	Setting Range	Default
L3-05	Stall Prevention Selection During Run	0 to 2	1

Note: **1.** This function is available in V/f, V/f w/PG, and OLV/PM.
2. When output frequency is 6 Hz or less, Stall Prevention during run is disabled regardless of the setting in L3-05 and L3-06.

Setting 0: Disabled

Drive runs at the set frequency reference. A heavy load may cause the motor to stall and trip the drive with an oC or oL fault.

Setting 1: Decelerate using C1-02

If the current exceeds the Stall Prevention level set in parameter L3-06, then the drive will decelerate at decel time 1 (C1-02). Once the current level drops below the value of L3-06 minus 2% for 100 ms, the drive accelerates back to the frequency reference at the active acceleration time.

Setting 2: Decelerate using C1-04

Same as setting 1 except the drive decelerates at decel time 2 (C1-04).

上位科技有限公司
購買 維修 此手冊零組件
電話： 037-466333
Email: service@repairtw.com
Line id: @zzzz

■ L3-06: Stall Prevention Level during Run

Sets the current level to trigger Stall Prevention during run. Depending on the setting of parameter L3-23, the level is automatically reduced in the constant power range (speed beyond base speed).

The Stall Prevention level can be adjusted using an analog input. Refer to *Multi-Function Analog Input Terminal Settings on page 237* for details.

No.	Name	Setting Range	Default
L3-06	Stall Prevention Level During Run	30 to 150 <1>	<1>

<1> The upper limit and default for this setting is determined by C6-01 and L8-38.

■ L3-23: Automatic Reduction Selection for Stall Prevention during Run

This function reduces the Stall Prevention during run level in the constant power range.

No.	Name	Setting Range	Default
L3-23	Automatic Reduction Selection for Stall Prevention During Run	0 or 1	0

Setting 0: Disabled

The level set in L3-06 is used throughout the entire speed range.

Setting 1: Enabled

The Stall Prevention level during run is reduced in the constant power range. The lower limit will be 40% of L3-06.

■ Overvoltage Suppression Function

This function suppresses overvoltage faults by decreasing the regenerative torque limit and slightly increasing the output frequency when the DC bus voltage rises. It can be used to drive loads with cyclic regenerative operation, such as a punch press or other applications that involve repetitive crank movements.

The regenerative torque limit and the output frequency are adjusted during ov suppression so that the DC bus voltage does not exceed the level set in parameter L3-17. In addition to the parameters explained below, ov suppression also uses these settings for frequency adjustment:

- DC bus voltage gain (L3-20)
- Deceleration rate calculations gain (L3-21)
- Inertia calculations for motor acceleration time (L3-24)
- Load inertia ratio (L3-25)

Note:
1. The motor speed will exceed the frequency reference when overvoltage suppression is triggered. Consequently, overvoltage suppression is not appropriate in applications that require a perfect match between the frequency reference and the motor speed.
2. Disable overvoltage suppression when using a braking resistor.
3. Overvoltage may still occur if there is a sudden increase to a regenerative load.
4. This function is enabled only when operating just below the maximum frequency. Overvoltage suppression does not increase the output frequency beyond the maximum frequency. If this is required by the application, increase the maximum frequency and change the base frequency setting.

■ L3-11: Overvoltage Suppression Function Selection

Enables or disables the overvoltage suppression function.

No.	Name	Setting Range	Default
L3-11	Overvoltage Suppression Function Selection	0 or 1	0

上正科技有限公司
購買、維修 此手冊零組件
電話： 037-466333
Email: service@repairtw.com
Line Id: @2222
www.repairtw.com

Setting 0: Disabled

The regenerative torque limit and the output frequency are not adjusted. A regenerative load may trip the drive with an overvoltage fault. Use this setting if dynamic braking options are installed.

Setting 1: Enabled

When the DC bus voltage rises due to regenerative load, an overvoltage fault is prevented by decreasing the regenerative torque limit and increasing the output frequency.

■ L3-17: Target DC Bus Voltage for Overvoltage Suppression and Stall Prevention

Sets the target DC bus voltage target level used by the overvoltage suppression function (L3-11 = 1), Intelligent Stall Prevention during deceleration (L3-04 = 2).

No.	Name	Setting Range	Default
L3-17	Target DC Bus Voltage for Overvoltage Suppression and Stall Prevention	150 to 400 Vdc <1>	370 Vdc <1> <2>

<1> Values are for 200 V class drives and must be doubled for 400 V class drives.
<2> This value is initialized when E1-01 is changed.

■ L3-20: DC Bus Voltage Adjustment Gain

Determines the proportional gain used by overvoltage suppression (L3-11 = 1), Single Drive KEB 2 (L2-29 = 1), KEB Ride Thru 2 (H1-□□ = 7A or 7B) and Intelligent Stall Prevention during deceleration (L3-04 = 2) in order to control the DC bus voltage.

No.	Name	Setting Range	Default
L3-20	DC Bus Voltage Adjustment Gain	0.00 to 5.00	Determined by A1-02

Adjustment for Single Drive KEB 2 (L2-29 = 1) and Intelligent Stall Prevention During Deceleration

- Increase this setting slowly in steps of 0.1 if overvoltage or undervoltage occurs at the beginning of deceleration.
- If this setting is too high, then a fair amount of speed or torque ripple can result.

Adjustment for Overvoltage Suppression

- Increase this setting slowly in steps of 0.1 if overvoltage suppression is enabled (L3-11 = 1) and a sudden increase in a regenerative load results in an overvoltage (ov) fault.

• If this setting is too high, excessive speed or torque ripple can result.

■ L3-21: Accel/Decel Rate Calculation Gain

Determines the proportional gain used by overvoltage suppression (L3-11 = 1), Single Drive KEB 2 (L2-29 = 1), and Intelligent Stall Prevention during deceleration (L3-04 = 2) in order to calculate acceleration and deceleration rates.

No.	Name	Setting Range	Default
L3-21	Accel/Decel Rate Calculation Gain	0.10 to 10.00	<1>

<1> This value is reset to its default value when the control mode is changed (A1-02). The value shown here is for Open Loop Vector Control.

Adjustment for Single Drive KEB 2 (L2-29 = 1) and Intelligent Stall Prevention During Deceleration

• Reduce L3-21 in steps of 0.05 if there is a fairly large speed or current ripple.
• Small reductions of L3-21can also help solve problems with overvoltage and overcurrent.
• Decreasing this setting too much can result in a slow DC bus voltage control response and may also lengthen deceleration times beyond optimal levels.

Adjustment for Overvoltage Suppression

• Increase this setting in steps of 0.1 if overvoltage occurs as a result of a regenerative load when overvoltage suppression is enabled (L3-11 = 1).
• If there is a fairly large speed ripple when overvoltage suppression is enabled, then decrease L3-21 in steps of 0.05.

■ L3-24: Motor Acceleration Time for Inertia Calculations

Sets the time it takes to accelerate the motor from stop to the maximum speed at motor rated torque. This parameter should be set when using Single Drive KEB 2 (L2-29 = 1), Intelligent Stall Prevention during deceleration (L2-04 = 2), or the overvoltage suppression function (L3-11 = 1).

上正科技有限公司
購買、維修 此手冊零組件
電話：037-246333
Email: service@repairtw.com
Line id: @rrr7
www.repairtw.com

No.	Name	Setting Range	Default
L3-24	Motor Acceleration Time for Inertia Calculations	0.001 to 10.000 s	Determined by o2-04, C6-01, E2-11, and E5-01 <1>

<1> Parameter L3-24 is defaulted for a Yaskawa standard 4-pole motor. During Auto-Tuning, L3-24 will be initialized to a Yaskawa standard 4-pole motor if parameter E2-11 is changed. This value also changes based on the motor code set to E5-01 when using the Open Loop Vector Control Mode for PM motors.

Automatic Parameter Setup

In Closed Loop Vector Control for induction motors or PM motors, the Inertia Auto-Tuning function can be used to let the drive automatically adjust this parameter. *Refer to Auto-Tuning on page 109*.

Manual Parameter Setup

Calculations are made as follows:

$$\text{L3-24} = \frac{2 \cdot \pi \cdot J\ [kgm^2] \cdot n_{rated}[r/min]}{60 \cdot T_{rated}[Nm]}$$

The rated torque can be calculated as follows:

$$T_{rated}[Nm] = \frac{60 \cdot P_{Motor}[kW] \cdot 10^3}{2 \cdot \pi \cdot n_{rated}[r/min]}$$

■ L3-25: Load Inertia Ratio

Determines the ratio between the rotor inertia and the load. Set this parameter when using Single Drive KEB 2 (L2-29 = 1), Intelligent Stall Prevention during deceleration (L3-04 = 2), or the overvoltage suppression function (L3-11 = 1).

No.	Name	Setting Range	Default
L3-25	Load Inertia Ratio	1.0 to 1000.0	1.0

When set incorrectly, a fairly large current ripple can result during Single Drive KEB 2 (L2-29 = 1) and overvoltage suppression (L3-11 = 1) or other faults such as ov, Uv1, and oC may occur.

Automatic Parameter Setup

In Closed Loop Vector Control for induction motors or PM motors the Inertia Auto-Tuning function can be used to let the drive automatically adjust this parameter. *Refer to Auto-Tuning on page 109*.

Manual Parameter Setup

Parameter L3-25 can be calculated by:

$$\text{L3-25} = \frac{\text{Machine Inertia}}{\text{Motor Inertia}}$$

■ L3-26: Additional DC Bus Capacitors

Sets the capacity of any additional DC bus capacitors that have been installed. This data is used in calculations for Single Drive KEB Ride-Thru 2. This setting needs to be adjusted only if external capacity is connected to the drives DC bus and Single Drive KEB 2 is used.

No.	Name	Setting Range	Default
L3-26	Additional DC Bus Capacitors	0 to 65000 µF	0 µF

■ L3-27: Stall Prevention Detection Time

Sets a delay time from when the Stall Prevention level is reached and the actual Stall Prevention function is activated.

No.	Name	Setting Range	Default
L3-27	Stall Prevention Detection Time	0 to 5000 ms	50 ms

◆ L4: Speed Detection

上正科技有限公司
購買、維修 此手冊零組件
電話： 037-466333
Email: service@repairtw.com
Line id: @zzzz
www.repairtw.com

These parameters set up the speed agree and speed detection functions which can be assigned to the multi-function output terminals.

■ L4-01, L4-02: Speed Agreement Detection Level and Detection Width

Parameter L4-01 sets the detection level for the digital output functions “Speed agree 1,” “User-set speed agree 1,” “Frequency detection 1,” and “Frequency detection 2.”

Parameter L4-02 sets the hysteresis level for these functions.

No.	Name	Setting Range	Default
L4-01	Speed Agreement Detection Level	0.0 to 400.0 Hz	0.0 Hz
L4-02	Speed Agreement Detection Width	0.0 to 20.0 Hz	Determined by A1-02

Refer to H2-01 to H2-03: Terminal M1-M2, M3-M4, and M5-M6 Function Selection on page 224, Settings 2, 3, 4, and 5.

■ L4-03, L4-04: Speed Agreement Detection Level and Detection Width (+/-)

Parameter L4-03 sets the detection level for the digital output functions “Speed agree 2,” “User-set speed agree 2,” “Frequency detection 3,” and “Frequency detection 4.”

Parameter L4-04 sets the hysteresis level for these functions.

No.	Name	Setting Range	Default
L4-03	Speed Agreement Detection Level (+/-)	-400.0 to 400.0 Hz	0.0 Hz
L4-04	Speed Agreement Detection Width (+/-)	0.0 to 20.0 Hz	Determined by A1-02

Refer to H2-01 to H2-03: Terminal M1-M2, M3-M4, and M5-M6 Function Selection on page 224, Settings 13, 14, 15, and 16.

■ L4-05: Frequency Reference Loss Detection Selection

The drive can detect a loss of an analog frequency reference from input A1, A2, or A3. Frequency reference loss is detected when the frequency reference drops below 10% of the reference before or below 5% of the maximum output frequency within 400 ms.

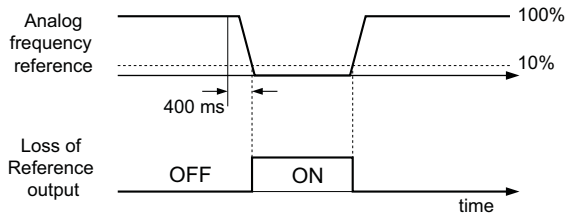

Figure 5.100 Loss of Reference Function

To have a digital output trigger when frequency reference loss occurs, set H2-01, H2-02, or H2-03 to C. *Refer to Setting C: Frequency reference loss on page 228* for details on setting the output function.

Parameter L4-05 selects the operation when a frequency reference loss is detected.

No.	Name	Setting Range	Default
L4-05	Frequency Reference Loss Detection Selection	0 or 1	0

Setting 0: Stop

Drive follows the frequency reference (which is no longer present) and simply stops the motor.

Setting 1: Continue operation with reduced frequency reference

The drive will continue operation at the frequency reference value set in parameter L4-06. When the external frequency reference value is restored, the operation is continued with the frequency reference.

■ L4-06: Frequency Reference at Reference Loss

Sets the frequency reference level the drive runs with when L4-05 = 1 and a reference loss was detected. The value is set as a percentage of the frequency reference before the loss was detected.

上亞科技有限公司
購買、維修 此手冊零組件
電話： 057-466333
Email: service@repairtw.com
Line id: @zzzz
www.repairtw.com

No.	Name	Setting Range	Default
L4-06	Frequency Reference at Reference Loss	0.0 to 100.0%	80.0%

■ L4-07: Speed Agreement Detection Selection

Determines when frequency detection is active using parameters L4-01 through L4-04.

No.	Name	Setting Range	Default
L4-07	Speed Agreement Detection Selection	0 or 1	0

Setting 0: No detection during baseblock
Setting 1: Detection always enabled

◆ L5: Fault Restart

After a fault has occurred, this function attempts to automatically restart the motor and continue operation instead of stopping.

The drive can be set up to perform a self-diagnostic check and resume the operation after a fault has occurred. If the self-check is successful and the cause of the fault has disappeared, the drive restarts by first performing Speed Search (*Refer to b3: Speed Search on page 146* for details).

DANGER! *Never use the fault restart function in hoist-type applications.*

The drive can attempt to restart itself following the faults listed below.

Fault	Name	Fault	Name
GF	Ground Fault	oL4	Overtorque 2
LF	Output Open Phase	ov	DC Bus Overvoltage
oC	Overcurrent	PF	Input Phase Loss
oH1	Drive Overheat	rH	Braking Resistor Fault
oL1	Motor Overload	rr	Braking Transistor Fault
oL2	Drive Overload	Uv1	DC Bus Undervoltage <1>
oL3	Overtorque 1	Sto	Pull-Out Detection

<1> When L2-01 is set to 1 through 4 (continue operation during momentary power loss)

Use parameters L5-01 to L5-05 to set up automatic fault restart.

To output a signal during fault restart, set H2-01, H2-02, or H2-03 to 1E.

■ L5-01: Number of Auto Restart Attempts

Sets the number of times that the drive may attempt to restart itself.

The method of incrementing the restart counter is determined by the setting of parameter L5-05. When the counter reaches the number set in L5-01, the operation stops and the fault has to be reset manually after correcting the cause.

The restart counter is incremented at each restart attempt, regardless of whether the attempt was successful. When the counter reaches the number set in L5-01, the operation stops and the fault has to be reset manually after correcting the cause.

The number of fault restarts is reset back to zero when:

- The drive operates normally for ten minutes following a fault restart.
- A fault is cleared manually after protective functions are triggered.
- The power supply is cycled.

No.	Name	Setting Range	Default
L5-01	Number of Auto Restart Attempts	0 to 10 Times	0 Time

■ L5-02: Auto Restart Fault Output Operation Selection

Determines if a fault output is triggered (H2-☐☐ = E) when the drive attempts to restart.

No.	Name	Setting Range	Default
L5-02	Auto Restart Fault Output Operation Selection	0 or 1	0

Setting 0: No fault output
Setting 1: Fault output is set

上亞科技有限公司
購買、維修 此手冊零組件
電話： 037-466333
Email: service@repairtw.com
Line id: @zzzz
www.repairtw.com

■ L5-04: Fault Reset Interval Time

Determines the amount of time to wait between restart attempts when parameter L5-05 is set to 1.

No.	Name	Setting Range	Default
L5-04	Fault Reset Interval Time	0.5 to 600.0 s	10.0 s

■ L5-05: Fault Reset Operation Selection

No.	Name	Setting Range	Default
L5-05	Fault Reset Operation Selection	0 or 1	0

Setting 0: Count successful restarts

The drive will continuously attempt to restart. If it restarts successfully, the restart counter is increased. This operation is repeated each time a fault occurs until the counter reaches the value set in L5-01.

Setting 1: Count restart attempts

The drive will try to restart using the time interval set in parameter L5-04. A record is kept of the number of attempts to restart to the drive, regardless of whether or not those attempts were successful. When the number of attempted restarts exceeds the value set to L5-01, the drive gives up trying to restart.

◆ L6: Torque Detection

The drive provides two independent torque detection functions that trigger an alarm or fault signal when the load is too heavy (oL), or suddenly drops (UL). They are set up using the L6-☐☐ parameters. To indicate the underload or overload condition to an external device, digital outputs should be programmed as shown below.

Note: When overtorque occurs in the application, the drive may stop due to overcurrent (oC) or overload (oL1). To prevent this, an overload situation should be indicated to the controller before oC or oL1 occur in the drive. Use the torque detection for this purpose. Use undertorque detection to discover application problems like a torn belt, a pump shutting off, or other similar trouble.

H2-01, H2-02, H2-03 Setting	Description
B	Torque detection 1, N.O. (output closes when overload or underload is detected)
17	Torque detection 1, N.C. (output opens when overload or underload is detected
18	Torque detection 2, N.O. (output close when overload or underload is detected)
19	Torque detection 2, N.C. (output opens when overload or underload is detected)

Figure 5.101 and *Figure 5.102* show the function of overtorque and undertorque detection.

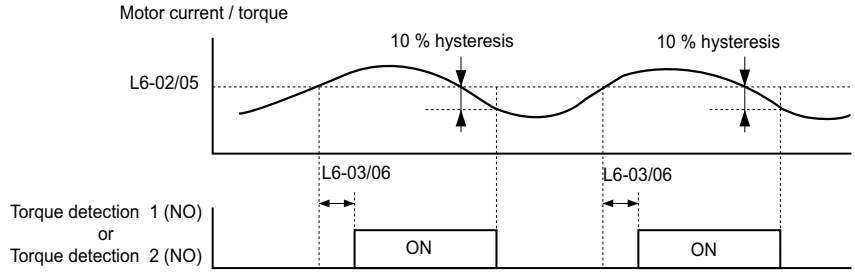

Figure 5.101 Overtorque Detection Operation

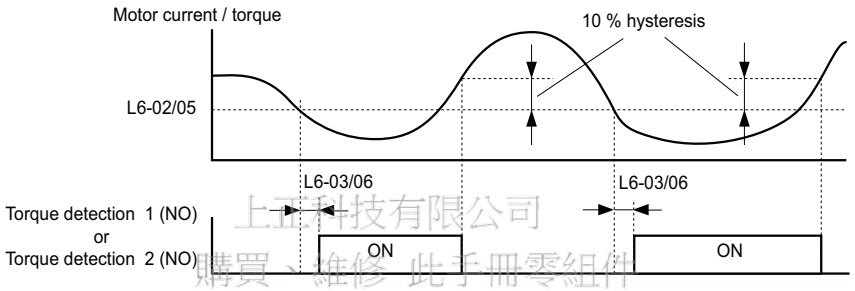

Figure 5.102 Undertorque Detection Operation

上正科技有限公司
購買、維修 此手冊零組件
電話： 037-466333
Email: service@repairtw.com
Line id: @zzzz
www.repairtw.com

Note: **1.** The torque detection function uses a hysteresis of 10% of the drive rated output current and motor rated torque.
2. In V/f, V/f w/PG and OLV/PM, the level is set as a percentage of the drive rated output current. In OLV, CLV, AOLV/PM and CLV/PM, it is set as a percentage of the motor rated torque.

■ L6-01, L6-04: Torque Detection Selection 1, 2

The torque detection function is triggered when the current or torque exceeds the levels set in L6-02 and L6-05 for longer than the time set in L6-03 and L6-06. L6-01 and L6-04 select the conditions for detection and the operation that follows.

No.	Name	Setting Range	Default
L6-01	Torque Detection Selection 1	0 to 8	0
L6-04	Torque Detection Selection 2	0 to 8	0

Setting 0: Disabled

Setting 1: oL3, oL4 at speed agree (alarm)

Overtorque detection is active only when the output speed is equal to the frequency reference, i.e., no detection during acceleration and deceleration. The operation continues after detection and an oL3/oL4 alarm is triggered.

Setting 2: oL3, oL4 at run (alarm)

Overtorque detection works as long as the Run command is active. The operation continues after detection and an oL3 or oL4 alarm is triggered.

Setting 3: oL3, oL4 at speed agree (fault)

Overtorque detection is active only when the output speed is equal to the frequency reference, i.e., no detection during acceleration and deceleration. The operation is stopped and an oL3 or oL4 fault is triggered.

Setting 4: oL3, oL4 at run - (fault)

Overtorque detection works as long as a Run command is active. Operation stops and an oL3 or oL4 fault is triggered.

Setting 5: UL3, UL4 at speed agree (alarm)

Undertorque detection is active only when the output speed is equal to the frequency reference, i.e., no detection during acceleration and deceleration. The operation continues after detection and an oL3 or oL4 alarm is triggered.

Setting 6: UL3, UL4 at Run - Alarm

Undertorque detection works as long as the Run command is active. The operation continues after detection and an oL3 or oL4 alarm is triggered.

Setting 7: UL3, UL4 at Speed Agree - Fault

Undertorque detection is active only when the output speed is equal to the frequency reference, i.e., no detection during acceleration and deceleration. The operation is stopped and an oL3 or oL4 fault is triggered.

Setting 8: UL3, UL4 at run - fault

Undertorque detection works as long as a Run command is active. Operation stops and an oL3 or oL4 fault is triggered.

■ L6-02, L6-05: Torque Detection Level 1, 2

These parameters set the detection levels for the torque detection functions 1 and 2. In V/f and OLV/PM control modes these levels are set as a percentage of the drive rated output current, while in vector control modes these levels are set as a percentage of the motor rated torque.

No.	Name	Setting Range	Default
L6-02	Torque Detection Level 1	0 to 300%	150%
L6-05	Torque Detection Level 2	0 to 300%	150%

Note: The torque detection level 1 (L6-02) can also be supplied by an analog input terminal set to H3-☐☐ = 7. Here, the analog value has priority and the setting in L6-02 is disregarded. Torque detection level 2 (L6-05) cannot be set by an analog input.

上正科技有限公司
購買、維修 此手冊零組件
電話： 037-466333
Email: service@repairtw.com
Line Id: @zzzz
www.repairtw.com

■ L6-03, L6-06: Torque Detection Time 1, 2

These parameters determine the time required to trigger an alarm or fault after exceeding the levels in L6-02 and L6-05.

No.	Name	Setting Range	Default
L6-03	Torque Detection Time 1	0.0 to 10.0 s	0.1 s
L6-06	Torque Detection Time 2	0.0 to 10.0 s	0.1 s

■ Mechanical Weakening Detection

This function can be used to detect mechanical weakening of a machine that leads to overtorque or undertorque situations after a certain machine operation time has elapsed.

The function is activated in the drive when the cumulative operation counter U4-01 exceeds the time set in parameter L6-11. Mechanical Weakening Detection uses the torque detection 1 settings (L6-01, L6-02, L6-03) and triggers an oL5 fault when overtorque or undertorque occurs in the speed range determined by parameter L6-08 and L6-09. The oL5 operation is set by parameter L6-08.

To output a signal for Mechanical Weakening Detection, set H2-☐☐ to 22.

■ L6-08: Mechanical Weakening Detection Operation

Sets the speed range to detect mechanical weakening and the action to take when mechanical weakening is detected.

No.	Name	Setting Range	Default
L6-08	Mechanical Weakening Detection Operation	0 to 8	0

Setting 0: Disabled

Setting 1: Continue running if the speed is greater than L6-09 (signed) (alarm)

Detection when the speed is above L6-09 (signed). Upon detection operation continues, but an oL5 alarm is output.

Setting 2: Continue running if the speed is greater than L6-09 (alarm)

Detection when the speed is above L6-09 (unsigned). Upon detection operation continues, but an oL5 alarm is output.

Setting 3: Stop when motor speed is greater than L6-09 (signed)

Detection when the speed is above L6-09 (signed). Upon detection operation is stopped and an oL5 fault is output.

Setting 4: Stop when Motor Speed is Greater than L6-09

Detection when the speed is above L6-09 (unsigned). Upon detection operation is stopped and a fault is output.

Setting 5: Continue running if the speed is less than L6-09 (signed) (alarm)

Detection when the speed is below L6-09 (signed). Upon detection operation continues, but an oL5 alarm is output.

Setting 6: Continue running if the speed is less than L6-09 (alarm)

Detection when the speed is below L6-09 (unsigned). Upon detection operation continues, but an oL5 alarm is output.

Setting 7: Stop when Motor Speed is less than L6-09 (signed)

Detection when the speed is below L6-09 (signed). Upon detection operation is stopped and an oL5 fault is output.

Setting 8: Stop when motor speed is less than L6-09

Detection when the speed is below L6-09 (unsigned). Upon detection the operation is stopped and an oL5 fault is output.

■ L6-09: Mechanical Weakening Detection Speed Level

Sets the speed level for Mechanical Weakening Detection.

No.	Name	Setting Range	Default
L6-09	Mechanical Weakening Detection Speed Level	-110.0 to 110.0%	110%

The value is set as a percentage of the maximum frequency. If L6-08 is set for unsigned speed detection (L6-08 = 2, 4, 6, 8) then the absolute value of L6-09 is used (negative settings are treated as positive values).

上正科技有限公司
購買、維修 此手冊零組件
電話： 037-466333
Email: service@repairtw.com
www.repairtw.com

■ L6-10: Mechanical Weakening Detection Time

Sets the time permitted for the situation selected in parameter L6-08 to arise before mechanical weakening is detected.

No.	Name	Setting Range	Default
L6-10	Mechanical Weakening Detection Time	0.0 to 10.0 s	0.1 s

■ L6-11: Mechanical Weakening Detection Start Time

Sets the drives cumulative operation time at which Mechanical Weakening Detection is activated. If U4-01 reaches the L6-11 value, the function is activated.

No.	Name	Setting Range	Default
L6-11	Mechanical Weakening Detection Start Time	0 to 65535 (Hex)	0 (Hex)

◆ L7: Torque Limit

The torque limit function can be used to limit the torque in each of the four quadrants individually and thereby protect the machinery. It can be used in OLV, CLV, AOLV/PM, and CLV/PM control modes. The limit can be either set by parameters or by analog inputs. A digital output programmed for “During torque limit” (H2-01, H2-02, H2-03 = 30) can be switched when the drive is operating at the torque limit.

■ Setting Torque Limits

The torque limits are defined by parameters L7-01 to L7-04 for each of the four operation quadrants. Analog inputs can also be used to either define a general limit for all operation conditions (H3-02, H3-06, H3-10 = 15) or for setting separate limits for each operation condition (H3-02, H3-06, H3-10 = 10, 11, or 12). ***Figure 5.103*** shows which of the limit settings is applied in each quadrant.

If two limit values are defined for the same operation conditions, the drive will use the lower value.

Note: The maximum output torque is ultimately limited by the drive output current (max. 150% of drive rated current in HD, 120% in ND). Output torque will not exceed the limit set for the drive rated current, even if the torque limits are set to higher values.

Example: If parameter L7-01 = 130%, L7-02 to L7-04 = 200%, and a general torque limit of 150% is set by an analog input (H2-02, H2-06, H2-10 = 15), then the torque limit in quadrant 1 will be 130%, but 150% in all other quadrants.

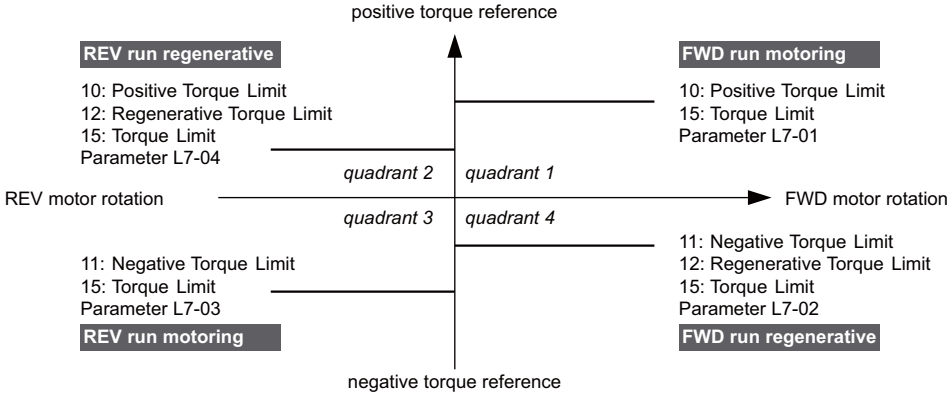

Figure 5.103 Torque Limit Parameters and Analog Input Settings

■ L7-01 to L7-04: Torque Limits

These parameters set the torque limits in each operation mode.

No.	Name	Setting Range	Default
L7-01	Forward Torque Limit	0 to 300%	200%
L7-02	Reverse Torque Limit	0 to 300%	200%
L7-03	Forward Regenerative Torque Limit	0 to 300%	200%
L7-04	Reverse Regenerative Torque Limit	0 to 300%	200%

Note: If the multi-function analog input is programmed for "10: Forward torque limit", "11: Reverse torque limit", "12: Regenerative torque limit", or "15: General torque limit", the drive uses the lower value in L7-01 through L7-04, or analog input torque limit.

上昇科技有限公司
聯昌：維修代客調參程序
電話： 037-466333
Email: service@xpsintw.com
Line id: @zzzz
www.repairtw.com

■ L7-06: Torque Limit Integral Time Constant

Sets the integral time constant for the torque limit function. Decrease this setting for faster torque limit response. Increase it if oscillation occur when operating at the torque limit.

No.	Name	Setting Range	Default
L7-06	Torque Limit Integral Time Constant	5 to 10000 ms	200 ms

■ L7-07: Torque Limit Control Method Selection during Accel/Decel

Selects the function of torque limit during acceleration and deceleration.

No.	Name	Setting Range	Default
L7-07	Torque Limit Control Method Selection during Accel/Decel	0 or 1	0

Setting 0: Proportional control

The torque limit function works with P control during accel and decel, and switches to I control at constant speed. Use this setting when accelerating or decelerating to the desired speed has priority over the torque limit during speed changes.

Setting 1: Integral control

The torque limit function always uses I control. Use this setting when a highly accurate torque limit is required, even during speed changes. Using this function may increase the acceleration time, or may prevent the motor speed from reaching the frequency reference if the torque limit is reached first.

■ L7-16: Torque Limit Process at Start

Assigns a time filter to allow the torque limit to build at start.

No.	Name	Setting Range	Default
L7-16	Torque Limit Process at Start	0 to 1	1

Setting 0: Disabled

Toque limit is created at start without a delay time. Disable L7-16 to maximize response time when the application requires sudden acceleration or deceleration at start.

Setting 1: Enabled

A time filter is added to allow the torque limit to build at start.

◆ L8: Drive Protection

■ L8-01: Internal Dynamic Braking Resistor Protection Selection (ERF type)

This parameter selects the dynamic braking resistor protection when using an optional heatsink mounted braking resistor (ERF type, 3% ED).

No.	Name	Setting Range	Default
L8-01	Internal Dynamic Braking Resistor Protection Selection (ERF type)	0 or 1	0

Setting 0: Disabled

Disables braking resistor protection. Use this setting for any dynamic braking option other than the Yaskawa ERF type resistor.

Setting 1: Enabled

Enables protection for ERF type resistors.

■ L8-02: Overheat Alarm Level

Sets the overheat alarm (oH) detection level.

上正科技有限公司
專業：維修 工手加零組件
電話：037 466333
Email: service@repairtw.com
Line id: @zzzz
www.repairtw.com

The drive will output an alarm when the heatsink temperature exceeds the alarm level set in parameter L8-02. If the operation when this alarm occurs is set for continued operation (L8-03 = 4) and the temperature reaches the overheat fault level, the drive will trigger an oH1 fault and stop operation.

When an output terminal is set for the oH pre-alarm (H2-☐☐ = 20), the switch will close when the heatsink temperature rises above L8-02.

No.	Name	Setting Range	Default
L8-02	Overheat Alarm Level	50 to 150 °C	Determined by C6-01 and o2-04

■ L8-03: Overheat Pre-Alarm Operation Selection

Sets the operation when an overheat pre-alarm is detected.

No.	Name	Setting Range	Default
L8-03	Overheat Pre-Alarm Operation Selection	0 to 4	3

Setting 0: Ramp to stop

If an overheat alarm occurs, the drive decelerates to stop using the deceleration time currently selected. If a digital output is programmed for "fault" (H2-☐☐ = E), this output will be triggered.

Setting 1: Coast to stop

If heatsink overheat (oH) occurs, the drive switches off the output and the motor coasts to stop. If a digital output is programmed for "fault" (H2-☐☐ = E), this output will be triggered.

Setting 2: Fast Stop

If an overheat alarm occurs, the drive decelerates to stop using the Fast Stop time (C1-09). If a digital output is programmed for "fault" (H2-☐☐ = E), this output will be triggered.

Setting 3: Alarm only

If an overheat alarm occurs, an alarm is output and the drive continues operation.

Setting 4: Operation with reduced speed

If an overheat alarm occurs, the operation is continued but the speed is reduced to the level set in parameter L8-19. If after 10 s the oH alarm is still present, the speed is reduced once more. The amount of reduction depends on how often the alarm repeats. If the oH alarm disappears while the drive is operating at a reduced speed, then the drive will switch back to the previous speed it was reduced to before. ***Figure 5.104*** explains the operation with reduced speed during an oH alarm. A digital output programmed for 4D is switched when the oH alarm is still active after ten reduction cycles.

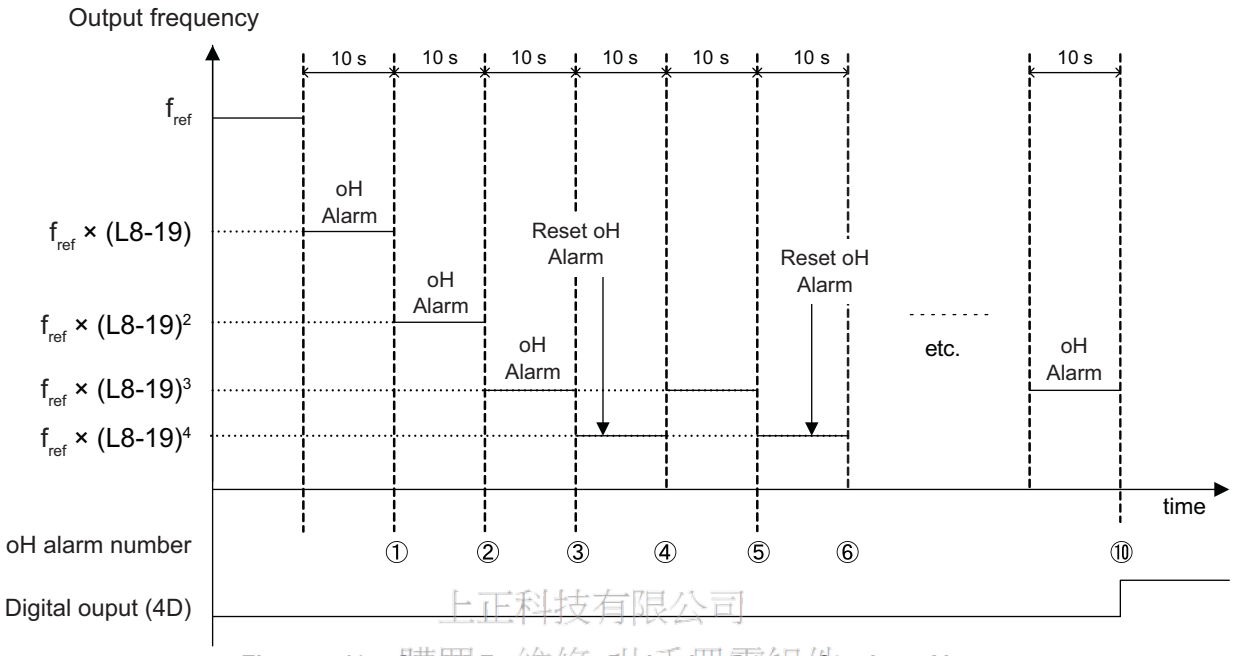

Figure 5.104 Output Frequency Reduction During Overheat Alarm

上正科技有限公司
購買、維修 此手冊零組件
電話： 037-460333
Email: service@repairtw.com
Line id: @zzzz
www.repairtw.com

■ L8-19: Frequency Reduction Rate during Overheat Pre-Alarm

Specifies how much the output frequency is reduced when L8-03 is set to 4 and an oH alarm is present. Set as a factor of the maximum output frequency.

No.	Name	Setting Range	Default
L8-19	Frequency Reduction Rate During Overheat Pre-Alarm	0.1 to 0.9	0.8

■ L8-05: Input Phase Loss Protection Selection

Enables or disables the input phase loss detection.

No.	Name	Setting Range	Default
L8-05	Input Phase Loss Protection Selection	0 or 1	1

Setting 0: Disabled
Setting 1: Enabled

Enables input phase loss detection. As detection is performed by measuring the DC bus ripple, a phase loss fault (PF) can also be triggered by a power supply voltage imbalance or main circuit capacitor deterioration. Detection is disabled if:

- The drive is decelerating.
- No Run command is active.
- Output current is less than or equal to 30% of the drive rated current.

■ L8-07: Output Phase Loss Protection Selection

Enables or disables the output phase loss detection, which is triggered when the output current falls below 5% of the drive rated current.

Note: **1.** Output phase loss detection can mistakenly be triggered if the motor rated current is very small compared to the drive rating. Disable this parameter in such cases.
2. Output phase loss detection is not possible when the drive is running a PM motor with light load.

No.	Name	Setting Range	Default
L8-07	Output Phase Loss Protection Selection	0 to 2	0

Setting 0: Disabled

Setting 1: Fault when one phase is lost

An output phase loss fault (LF) is triggered when one output phase is lost. The output shuts off and the motor coasts to stop.

Setting 2: Fault when two phases are lost

An output phase loss fault (LF) is triggered when two output phases are lost. The output shuts off and the motor coasts to stop.

■ L8-09: Output Ground Fault Detection Selection

Enables or disables the output ground fault detection.

No.	Name	Setting Range	Default
L8-09	Output Ground Fault Detection Selection	0 or 1	1

Setting 0: Disabled

Ground faults are not detected.

Setting 1: Enabled

A ground fault (GF) is triggered when high leakage current or a ground short circuit occurs in one or two output phases.

■ L8-10: Heatsink Cooling Fan Operation Selection

上正科技有限公司
購買、維修 此手冊零組件
電話: 037-466333
Email: service@repairtw.com
Line id: @zzzz
www.repairtw.com

Selects the heatsink cooling fan operation.

No.	Name	Setting Range	Default
L8-10	Heatsink Cooling Fan Operation Selection	0 or 1	0

Setting 0: Run with timer

The fan is switched on when a Run command is active. It is switched off with the delay set in parameter L8-11 after the Run command has been released. Using this setting extends the fan lifetime.

Setting 1: Run always

The fan runs whenever power is supplied to the drive.

■ L8-11: Heatsink Cooling Fan Off-Delay Time

Sets the cooling fan switch off-delay time if parameter L8-10 is set to 0.

No.	Name	Setting Range	Default
L8-11	Heatsink Cooling Fan Off-Delay Time	0 to 300 s	60 s

■ L8-12: Ambient Temperature Setting

If the temperature where the drive is mounted is above the specified values, the drive rated current must be reduced for optimal performance life. By setting the ambient temperature to parameter L8-12 and adjusting the installation method setting in L8-35, the drive rating automatically adapts to safe values.

No.	Name	Setting Range	Default
L8-12	Ambient Temperature Setting	-10 to 50 °C	40 °C

■ L8-15: oL2 Characteristics Selection at Low Speeds

Selects whether the drive overload capability (oL fault detection level) is reduced at low speeds in order to prevent premature output transistor failures.

Note: Contact Yaskawa for consultation first before disabling this setting.

No.	Name	Setting Range	Default
L8-15	oL2 Characteristics Selection at Low Speed	0 or 1	1

Setting 0: Protection disabled at low speed

The overload protection level is not reduced. Frequently operating the drive with high output current at low speed can lead to premature drive faults.

Setting 1: protection enabled at low speed

The overload protection level (oL2 fault detection level) is automatically reduced at speeds below 6 Hz.

■ L8-18: Software Current Limit Selection

The Software Current Limit (CLA) is a drive protection function that prevents main circuit transistor failures caused by high current. Parameter L8-18 enables or disables this function.

Note: This setting should not be changed unless absolutely necessary. For proper drive protection and operation leave the Software CLA function enabled.

No.	Name	Setting Range	Default
L8-18	Software Current Limit Selection	0 or 1	0

Setting 0: Software CLA disabled (gain = 0)

The drive may trip on an oC fault if the load is too heavy or the acceleration is too short.

上正科技有限公司
購買、維修 此手冊零組件
電話： 037-486938
Email: service@repairtw.com
Line id: @zzzz
www.repairtw.com

Setting 1: Software CLA enabled

When the soft CLA current level is reached, the drive reduces the output voltage in order to reduce the current. If the current level drops below the Software CLA level, then normal operation will continue.

■ L8-27: Overcurrent Detection Gain

Adjusts the overcurrent detection level when running in OLV/PM, AOLV/PM, or CLV/PM. A setting of 100% is equal to the motor rated current. When the drive rated current is considerably higher than the motor rated current, use this parameter to decrease the overcurrent level in order to prevent motor demagnetization by too high current.

Overcurrent detection will use whichever value is the lowest: the overcurrent level for the drive, or the motor rated current multiplied by L8-27.

No.	Name	Setting Range	Default
L8-27	Overcurrent Detection Gain	0.0 to 300.0%	300.0%

■ L8-29: Current Unbalance Detection (LF2)

Enables or disables output current imbalance detection when running in OLV/PM, AOLV/PM, or CLV/PM. Current unbalance can heat up a PM motor and lead to demagnetization of the magnets. The current imbalance detection function prevents such motor damage by monitoring output current and triggering the LF2 fault when current unbalance occurs.

No.	Name	Setting Range	Default
L8-29	Current Unbalance Detection (LF2)	0 or 1	1

Setting 0: Disabled

No current unbalance protection is provided to the motor.

Setting 1: Enabled

The LF2 fault is triggered if an output current imbalance is detected. Drive output shuts off and the motor coasts to stop.

■ L8-35: Installation Method Selection

Selects the type of installation for the drive and changes the drive overload (oL2) limits accordingly.

Note: **1.** This parameter is not reset when the drive is initialized.
2. The value is preset to the appropriate value when the drive is shipped. Change the value only when using Side-by-Side installation or when mounting a standard drive with the heatsink outside the cabinet.

No.	Name	Setting Range	Default
L8-35	Installation Method Selection	0 to 3	Determined by o2-04

Setting 0: IP00 enclosure

For an IP00 enclosure drive installed with at a minimum of 30 mm space to the next drive or a cabinet wall.

Setting 1: Side-by-Side mounting

For drives mounted according to Yaskawa's Side-by-Side specifications (requires 2 mm between drives).

Setting 2: IP20 or NEMA Type 1 enclosure

For drives compliant with IP20 or NEMA Type 1 enclosure specifications.

Setting 3: Finless drive or external heatsink Installation

For finless drives or a standard drive mounted with the heatsink outside the cabinet or enclosure panel.

■ L8-38: Carrier Frequency Reduction Selection

Lets the drive reduce the carrier frequency when the output current exceeds a certain level. This temporarily increases the overload capability (oL2 detection), allowing the drive to run through transient load peaks without tripping.

L8-38 selects the operation of the carrier frequency reduction function.

Note: This function cannot be used in Advanced Open Loop Vector for PM motors.

上正科技有限公司
購買、維修 此手冊零組件
電話： 037-466333
Email: service@repairtw.com
Line id: @zzzz
www.repairtw.com

No.	Name	Setting Range	Default
L8-38	Carrier Frequency Reduction Selection	0 to 2	Determined by A1-02, C6-01 and o2-04

Setting 0: Disabled

No carrier frequency reduction at high current.

Setting 1: Enabled for output frequencies below 6 Hz

The carrier frequency is reduced at speeds below 6 Hz when the current exceeds 100% of the drive rated current. The drive returns to its normal carrier frequency when the current falls below 88% or the output frequency exceeds 7 Hz.

Setting 2: Enabled for entire frequency range

The carrier frequency is reduced at the following speeds:

- Below 6 Hz when the current exceeds 100% of the drive rated current.
- Above 7 Hz when the current exceeds 112% of the drive rated current.

The drive uses the delay time set in parameter L8-40 and a hysteresis of 12% when switching the carrier frequency back to the set value.

■ L8-40: Carrier Frequency Reduction Off-Delay Time

Sets a hold time before returning to the original carrier frequency setting after the carrier frequency has been temporarily derated as determined by L8-38. The carrier frequency reduction function is disabled if this value is 0.00 s.

No.	Name	Setting Range	Default
L8-40	Carrier Frequency Reduction Off-Delay Time	0.00 to 2.00 s	Determined by A1-02

■ L8-41: High Current Alarm Selection

Triggers a high current alarm (HCA) when the output current rises too much.

No.	Name	Setting Range	Default
L8-41	High Current Alarm Selection	0 or 1	0

Setting 0: Disabled

No alarm is detected.

Setting 1: Enabled

An alarm is triggered when the output current exceeds 150% of the drive rated current. A digital output set for an alarm (H2-☐☐ = 10) will close.

■ L8-55: Internal Braking Transistor Protection

Enables or disables protection for the internal braking transistor.

No.	Name	Setting Range	Default
L8-55	Internal Braking Transistor Protection	0 or 1	1

Setting 0: Disabled

Braking transistor protection should be disabled whenever the internal braking transistor is not used. This includes,

- when using a regen converter such as DC5.
- when using a regen unit such as RC5.
- when using external braking transistor options like CDBR units.
- when the drive is used in common DC bus applications and the internal braking chopper is not installed.

Enabling this L8-55 under such conditions can incorrectly trigger a braking transistor fault (rF).

Setting 1: Enabled

The following models come with a built-in braking transistor:

- CIMR-A☐2A0004 to 0138
- CIMR-A☐4A0002 to 0072

Enable L8-55 when connecting a braking resistor or a braking resistor unit to the drive built-in braking transistor.

上正科技有限公司
購買、維修 此手冊零組件
電話： 037-466333
Email: service@repairtw.com
Line id: @zzzz
www.repairtw.com

5.9 n: Special Adjustments

These parameters handle a variety of specialized adjustments and functions, including Hunting Prevention, AFR Control, High Slip Braking, resistance between motor lines, and PM motor control functions.

◆ n1: Hunting Prevention

Hunting Prevention keeps the drive from hunting as a result of low inertia and operating with light load. Hunting often occurs with a high carrier frequency and an output frequency below 30 Hz.

■ n1-01: Hunting Prevention Selection

Enables or disables the Hunting Prevention function.

Note: This function is available only when using V/f Control. Hunting Prevention should be disabled when drive response is more important than suppressing motor oscillation. This function can also be disabled without any problems in applications with high inertia loads or relatively heavy loads.

No.	Name	Setting Range	Default
n1-01	Hunting Prevention Selection	0 or 1	1

Setting 0: Disabled
Setting 1: Enabled

■ n1-02: Hunting Prevention Gain Setting

Sets the gain for the Hunting Prevention Function.

大正科技有限公司
購買、維修 此手冊零組件
電話： 037-466333
Email: service@repairtw.com
Line Id: @zzzz
www.repairtw.com

No.	Name	Setting Range	Default
n1-02	Hunting Prevention Gain Setting	0.00 to 2.50	1.00

Normally, n1-02 does not need to be changed, but adjustment may help under the following conditions:

- If the motor vibrates while lightly loaded and n1-01 = 1, increase the gain by 0.1 until vibration ceases.
- If the motor stalls while n1-01 = 1, decrease the gain by 0.1 until the stalling ceases.

■ n1-03: Hunting Prevention Time Constant

Determines how responsive the Hunting Prevention function is (affects the primary delay time for Hunting Prevention).

No.	Name	Setting Range	Default
n1-03	Hunting Prevention Time Constant	0 to 500 ms	Determined by o2-04

Normally, n1-03 does not need to be changed, but adjustment may help under the following conditions:

- Increase this value for applications with a large load inertia. A higher setting leads to slower response, though, which can result in oscillation at lower frequencies.
- Lower this setting if oscillation occurs at low speed.

■ n1-05: Hunting Prevention Gain while in Reverse

This parameter is the same as n1-02, except that it is used when rotating in reverse. See the explanation for n1-02.

Note: When set to 0 ms, n1-02 is enabled even when the drive is operating in reverse.

No.	Name	Setting Range	Default
n1-05	Hunting Prevention Gain while in Reverse	0.00 to 2.50	0.00

◆ n2: Speed Feedback Detection Control (AFR) Tuning

These parameters are used to achieve speed stability when a load is suddenly applied or removed.

Note: Before making changes to the AFR parameters, make sure all motor parameters are set properly or perform Auto-Tuning.

■ n2-01: Speed Feedback Detection Control (AFR) Gain

Sets the internal speed feedback detection control gain in the AFR.

No.	Name	Setting Range	Default
n2-01	Speed Feedback Detection Control (AFR) Gain	0.00 to 10.00	1.00

Normally there is no need to adjust n2-01 from the default setting. Make adjustments in the following cases:

- If hunting occurs, increase the setting value in steps of 0.05 while checking the response.
- If response is low, decrease the setting value in steps of 0.05 while checking the response.

■ n2-02, n2-03: Speed Feedback Detection Control (AFR) Time Constant 1, 2

Parameter n2-02 sets the time constant normally used by AFR.

Parameter n2-03 sets the time constant during Speed Search or regenerative operation.

No.	Name	Setting Range	Default
n2-02	Speed Feedback Detection Control (AFR) Time Constant 1	0 to 2000 ms	50 ms
n2-03	Speed Feedback Detection Control (AFR) Time Constant 2	0 to 2000 ms	750 ms

Note: Parameter n2-02 cannot be set higher than n2-03 or an oPE08 error will result.

上正科技有限公司
購買、維修 此手冊零組件
電話： 037-466333
Email: service@repairtw.com
Line id: @zzzz
www.repairtw.com

These parameters rarely need to be changed. Adjust settings only under the following conditions:

- If hunting occurs, increase n2-02. If response is low, decrease it.
- Increase n2-03 if overvoltage occurs with high inertia loads at the end of acceleration or with sudden load changes.
- If setting n2-02 to a higher value, also increase C4-02 (Torque Compensation Delay Time Constant 1) proportionally.
- If setting n2-02 to a higher value, also increase C4-06 (Torque Compensation Delay Time Constant 2) proportionally.

◆ n3: High Slip Braking (HSB) and Overexcitation Braking

■ High Slip Braking (V/f)

HSB works in V/f Control only and is used to decrease the stopping time compared to normal deceleration without using dynamic braking options. HSB stops the motor by reducing the output frequency in large steps, thus producing a high slip. Regenerative energy created from decelerating the load is dissipated in the motor windings through increased motor slip. Because of the increased temperature of the motor windings, HSB should not be used for frequently stopping the motor. The duty cycle should be around 5% or less.

Notes on using High Slip Braking:

- The deceleration time that has been set is ignored during HSB. Use Overexcitation Deceleration 1 (L3-04 = 4) or a dynamic braking option if the motor has to be stopped in a defined time.
- Braking time varies based on the load inertia and motor characteristics.
- HSB and KEB Ride-Thru cannot be used simultaneously. If enabled at the same time, an oPE03 will occur.
- HSB must be triggered by a digital input set to H1-☐☐ = 68. Once the HSB command is given, it is not possible to restart the drive until the motor has stopped completely and the Run command is cycled.
- Use parameters n3-01 through n3-04 for adjusting HSB.

■ n3-01: High Slip Braking Deceleration Frequency Width

Sets the step width for frequency reduction during HSB. Increase n3-01 if DC bus overvoltage (ov) occurs during HSB.

No.	Name	Setting Range	Default
n3-01	High Slip Braking Deceleration Frequency Width	1 to 20%	5%

■ n3-02: High Slip Braking Current Limit

Sets the maximum current to be output during an HSB stop as a percentage of motor rated current (E2-01). Reducing the current limit increases the deceleration time. Make sure that this value does not exceed the drive's current rating.

- Lower this setting if overvoltage occurs during HSB.
- Lower this setting if motor current is too high during HSB. High current can damage the motor due to overheat.
- The default setting is 150% when the drive is set for Heavy Duty, and 120% when the drive is set for Normal Duty.

No.	Name	Setting Range	Default
n3-02	High Slip Braking Current Limit	100 to 200%	Determined by C6-01 and L8-38

■ n3-03: High Slip Braking Dwell Time at Stop

When the motor reaches a relatively low speed at the end of HSB, the output frequency is kept at the minimum output frequency E1-09 for the time set in n3-03. Increase this time if the inertia is very high and the motor is still coasting after HSB is complete.

No.	Name	Setting Range	Default
n3-03	High Slip Braking Dwell Time at Stop	0.0 to 10.0 s	1.0 s

■ n3-04: High Slip Braking Overload Time

Sets the time required for an HSB overload fault (oL7) to occur when the drive output frequency does not change for some reason during an HSB stop. This can be caused by the load rotating the motor or by excessive load inertia, resulting in a high current. To protect the motor from overheat, the drive trips with an oL7 fault if such these conditions lasts longer than the time set in n3-04.

上正科技有限公司
購買、維修 此手冊零組件
電話： 037 466833
Email: service@repairtw.com
Line id: @zzzz
www.repairtw.com

No.	Name	Setting Range	Default
n3-04	High Slip Braking Overload Time	30 to 1200 s	40 s

■ Overexcitation Deceleration (Induction Motors)

Overexcitation Deceleration increases the flux during deceleration and allows shorter deceleration time settings without the use of a braking resistor. Enabled by setting L3-04 to 4 or 5. See *L3-04: Stall Prevention Selection during Deceleration on page 258*.

Notes on Overexcitation Deceleration

- As regenerative energy is mainly dissipated as heat in the motor, the motor temperature will rise if Overexcitation Deceleration is applied frequently. In such cases, make sure the motor temperature does not exceed the maximum allowable value or consider using a braking resistor option instead.
- During Overexcitation Deceleration 2, Hunting Prevention in V/f Control and torque limits in Open Loop Vector Control are disabled.
- Do not use Overexcitation Deceleration in combination with a braking resistor option.
- Overexcitation Deceleration can be used in Open and Closed Loop Vector Control, but it lowers the accuracy of Torque Control, and thereby the braking efficiency. It can be most efficiently used in a V/f Control.
- Overexcitation Deceleration cannot be used with PM motors.

Parameter Adjustments

- Use parameters n3-13 through n3-23 for adjusting Overexcitation Deceleration.
- When repetitive or long Overexcitation Deceleration results in motor overheat, lower the overexcitation gain (n3-13) and reduce the overslip suppression current level (n3-21).
- During Overexcitation Deceleration 1 (L3-04 = 4), the drive decelerates at the active deceleration time (C1-02, C1-04, C1-06, or C1-08). Make sure to set this time so that no overvoltage (ov) fault occurs.
- During Overexcitation Deceleration 2 (L3-04 = 5), the drive decelerates using the active deceleration time while adjusting the deceleration rate in order to keep the DC bus voltage at the level set in L3-17. The actual stopping time will be longer or shorter than the set deceleration time, depending on the motor characteristics and the load inertia. If overvoltage occurs (ov), try increasing the deceleration time.
- When a Run command is entered during Overexcitation Deceleration, overexcitation operation is cancelled and the drive will reaccelerate to the specified speed.

■ n3-13: Overexcitation Deceleration Gain

Multiplies a gain to the V/f pattern output value during Overexcitation Deceleration, thereby determining the level of overexcitation. The drive returns to the normal V/f value after the motor has stopped or when it is accelerating to the frequency reference.

No.	Name	Setting Range	Default
n3-13	Overexcitation Deceleration Gain	1.00 to 1.40	1.10

The optimum setting for n3-13 depends on the motor flux saturation characteristics.

- Increase the gain gradually by 1.25 to 1.30 to improve the braking power of Overexcitation Deceleration.
- If flux saturation characteristics cause overcurrent, try lowering n3-13. A high setting sometimes causes overcurrent (oC), motor overload (oL1), or drive overload (oL2). Lowering n3-21 can also help remedy these problems.

■ n3-14: High Frequency Injection during Overexcitation Deceleration

Enables High Frequency Injection while Overexcitation Deceleration is executed. Injecting high frequency into the motor increases loss, which in turn shortens deceleration time. This function tends to increase audible noise from the motor, and might not be desirable in environments where motor noise is a concern.

No.	Name	Setting Range	Default
n3-14	High Frequency Injection During Overexcitation Deceleration	0 or 1	0

Setting 0: Disabled
Setting 1: Enabled

■ n3-21: High Slip Suppression Current Level

上正科技有限公司
購買、維修 此手冊零組件
電話： 037-456333
Email: service@repairtw.com
Line id: @zzzz
www.repairtw.com

If the motor current exceeds the value set to n3-21 during Overexcitation Deceleration due to flux saturation, the drive will automatically reduce the overexcitation gain. Parameter n3-21 is set as a percentage of the drive rated current.

This parameter should be set to a relatively low value to optimize deceleration. If overcurrent, oL1, or oL2 occur during Overexcitation Deceleration, reduce the overslip suppression current level.

No.	Name	Setting Range	Default
n3-21	High Slip Suppression Current Level	0 to 150%	100%

■ n3-23: Overexcitation Operation Selection

Limit the Overexcitation Deceleration operation selected in parameter L3-04 to forward only or reverse only.

No.	Name	Setting Range	Default
n3-23	Overexcitation Operation Selection	0 to 2	0

Setting 0: Overexcitation Operation as Selected in L3-04 in Forward and Reverse Direction
Setting 1: Overexcitation Operation as Selected in L3-04 in Forward Direction Only
Setting 2: Overexcitation Operation as Selected in L3-04 in Reverse Direction Only

◆ n5: Feed Forward Control

Enabling Feed Forward can improve the drives responsiveness to speed reference changes in applications where a high speed control proportional gain setting (ASR gain, C5-01, C5-03) would lead to problems with overshoot, undershoot, or oscillation. ***Figure 5.105*** gives an example of overshoot reduction by Feed Forward. Parameters related to this function and the function principle are illustrated in ***Figure 5.106***. Feed Forward can only be used in Closed Loop Vector Control for induction or PM motors (A1-02 = 4 or 7), or in Advanced Open Loop Vector Control for PM motors (A1-02 = 6).

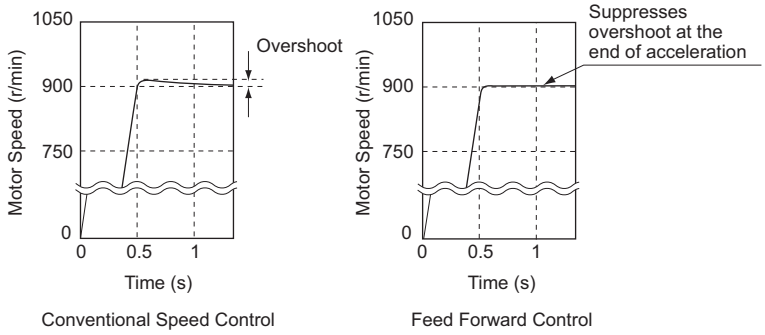

Figure 5.105 Overshoot Suppression by Feed Forward Control

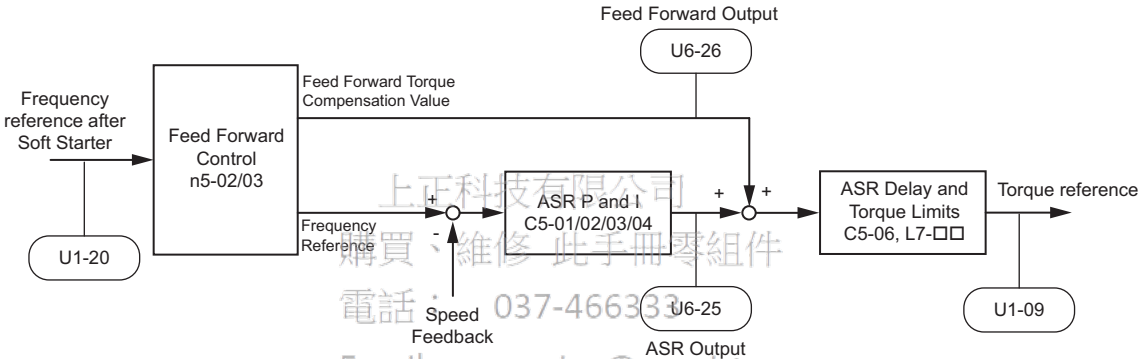

Figure 5.106 Feed Forward Control

Note: **1.** Feed Forward can only be used in CLV, AOLV/PM, and CLV/PM control modes.
2. Prior to using Feed Forward, always perform Auto-Tuning or set the correct motor data manually. Also perform ASR Auto-Tuning to set the speed loop gain (C5-01), or adjust it manually. Fine-tune the other speed control loop parameters (C5-□□) if required.
3. If not restricted by the application, use Inertia Auto Tuning (T1-01 = 8) to have the drive automatically optimize Feed Forward parameters. If Inertia Auto Tuning cannot be performed, parameters related to Feed Forward should be set manually.

■ n5-01: Feed Forward Control Selection

Enables to disables the Feed Forward function.

No.	Name	Setting Range	Default
n5-01	Feed Forward Control Selection	0 or 1	0

Setting 0: Disabled
Setting 1: Enabled

■ n5-02: Motor Acceleration Time

Sets the time required to accelerate the motor from a full stop up to the rated speed at the rated torque.

No.	Parameter Name	Setting Range	Default
n5-02	Motor Acceleration Time	0.001 to 10.000 s	Determined by C6-01, E5-01 and o2-04

This value can be set automatically by Inertia Auto-Tuning. If Inertia Auto-Tuning cannot be performed, use one of the methods below to determine the setting value for this parameter.

Calculation

The motor acceleration time can be calculated by,

$n5\text{-}02 = \frac{\pi \cdot J_{Motor} \cdot n_{rated}}{30 \cdot T_{rated}}$	Where: • J_{Motor} is the motor inertia in kgm/s^2. • n_{rated} is the rated speed of the motor in r/min • T_{rated} is the rated torque of the motor in N·m.

or

$n5\text{-}02 = \frac{4 \cdot \pi \cdot J_{Motor} \cdot f_{rated}}{p \cdot T_{rated}}$	Where: • J_{Motor} is the motor inertia in kgm/s^2. • f_{rated} is the rated frequency of the motor in Hz. • p is the number of motor poles (not pole pairs!). • T_{rated} is the rated torque of the motor in N·m.

Measuring Acceleration Time

Take the following steps when measuring the motor acceleration time.

1. Decouple motor and load.
2. Make sure Auto-Tuning has been performed or that the correct motor data has been entered manually.
3. Make sure that the speed loop (ASR) has been set up properly.
4. Set the acceleration time to zero.
5. Set the forward torque limit in parameter L7-01 to 100%.
6. Set the frequency reference equal to the motor rated speed.
7. While monitoring the motor speed in U1-05, start the motor in the forward direction and measure the time it takes to reach the rated speed.
8. Reverse the parameter settings above and set the measured time to parameter n5-02.

■ n5-03: Feed Forward Control Gain

Parameter n5-03 sets the inertia ratio of the load connected to the motor.

上正科技有限公司
購買、維修 此手冊零組件
電話： 037-466333
Email: service@repairtw.com
Line id: @zzzz
www.repairtw.com

No.	Parameter Name	Setting Range	Default
n5-03	Feed Forward Control Gain	0.00 or 100.00	1.00

This value can be set automatically by Inertia Auto-Tuning. If Inertia Auto Tuning cannot be performed, determine the value for parameter n5-03 using the following steps.

1. Setup parameter n5-02 correctly.
2. Couple motor and load.
3. Set the acceleration time C1-01 to 0.
4. Set the torque limits in the L7-☐☐ parameters to a value that will easily be reached during the test (T_{Lim_Test}).
5. Set the frequency reference equal to a value in the upper speed range of the machine (f_{ref_Test}).
6. While monitoring the motor speed in U1-05, start the motor in the forward direction and measure the time it takes to reach the rated speed (t_{accel}).
7. Reverse the parameter settings above and calculate the set value for parameter n5-03 using the formula below.

$n5\text{-}03 = \frac{t_{accel} \cdot T_{Lim\_Test} \cdot f_{rated}}{n5\text{-}02 \cdot f_{ref\_Test} \cdot 100} - 1$	Where: • t_{accel} is the measured acceleration time in s. • f_{rated} is the rated frequency of the motor in Hz. • T_{Lim_Test} is torque limit setting during the test. • f_{ref_Test} is the frequency reference during the test in N·m.

◆ n6: Online Tuning

Online Tuning prevents loss from insufficient torque and diminished speed control accuracy due to fluctuating motor temperature.

■ n6-01: Online Tuning Selection

Selects the type of motor data Online Tuning uses for Open Loop Vector Control.

No.	Name	Setting Range	Default
n6-01	Online Tuning Selection	0 to 2	0

Setting 0: Disabled
Setting 1: Line-to-line resistance tuning

This setting enables line-to-line resistance online tuning. This procedure is effective for speed values up to 6 Hz and improves the overload capacity in the low speed range by adjusting the value set for the motor resistance.

Setting 2: Voltage correction

The drive adjusts the output voltage during run to improve overload tolerance and minimize the effects of high temperatures on speed accuracy.

Note: This setting can only be selected if the Energy Saving function is disabled (b8-01 = 0).

■ n6-05: Online Tuning Gain

Sets the compensation gain for the voltage correction in the Online Tuning function (n6-01 = 2). Normally there is no need to adjust n6-05, but increase the set value in steps of 0.1 if an overload fault occurs during voltage correction.

No.	Name	Setting Range	Default
n6-05	Online Tuning Gain	0.10 to 5.00	1.00

◆ n8: PM Motor Control Tuning

These parameters are available in the vector control modes for permanent magnet motors and can be used to adjust the control performance.

■ n8-01: Initial Rotor Position Estimation Current (AOLV/PM)

Sets the current used for the initial rotor position estimation. The value is set as a percentage of the motor rated current.

上正科技有限公司
購買、維修 此手冊零組件
電話: 037-466333
E-mail: service@repairtw.com
Line id: @zzzz
www.repairtw.com

No.	Name	Setting Range	Default
n8-01	Initial Rotor Position Estimation Current	0 to 100%	50%

■ n8-02: Pole Attraction Current (AOLV/PM)

Sets the current applied to pull the rotor into position after the initial rotor position estimations are complete. The value is set as a percentage of the motor rated current. Increase this setting in order to increase the starting torque.

No.	Name	Setting Range	Default
n8-02	Pole Attraction Current	0 to 150%	80%

■ n8-35: Initial Rotor Position Detection Selection (AOLV/PM, CLV/PM)

Selects how the rotor position is detected at start.

Note: **1.** In CLV/PM, the drive performs a magnetic pole search the first time it starts the motor. After that, rotor position is calculated from the PG encoder signal and saved until the drive is switched off. Parameter n8-35 determines how this initial pole search operates.
2. High Frequency Injection and pulse injection for rotor position detection (n8-35 = 1 or 2) can be used with IPM motors only. When using a SPM motor, select the pull in method to find the initial position of the rotor (n8-35 = 0).

No.	Name	Setting Range	Default
n8-35	Initial Rotor Position Detection Selection	0 to 2	1

Setting 0: Pull in

Starts the rotor using pull-in current.

Setting 1: High Frequency Injection

High frequency is injected in order to detect the rotor position. Some noise may be generated from the motor at start.

Setting 2: Pulse injection

A pulse signal is injected into the motor in order to detect the rotor position.

■ n8-45: Speed Feedback Detection Control Gain (OLV/PM)

Sets the gain for internal speed feedback detection control. Although this setting rarely needs to be changed, adjustment may be necessary under the following conditions:

- Increase this setting if motor oscillation or hunting occurs.
- Decrease this setting in increments of 0.05 to decrease drive responsiveness.

No.	Name	Setting Range	Default
n8-45	Speed Feedback Detection Control Gain	0.00 to 10.00	0.80

■ n8-47: Pull-In Current Compensation Time Constant (OLV/PM)

Sets the time constant for the actual current and the pull-in current to match one another.

Although this setting rarely needs to be changed, adjustment may be necessary under the following conditions:

- Increase this setting when it takes too long for the reference value of the pull-in current to match the target value.
- Decrease this setting if motor oscillation occurs.

No.	Name	Setting Range	Default
n8-47	Pull-In Current Compensation Time Constant	0.0 to 100.0 s	5.0 s

■ n8-48: Pull-In Current (OLV/PM)

Sets the d-axis current during no-load operation at a constant speed. Set as a percentage of the motor rated current.

- Increase this setting when hunting occurs or the motor speed is unstable while running at a constant speed.
- If there is too much current when driving a light load at a constant speed, then slightly increasing this value.

上正科技有限公司
購買、維修 此手冊零組件
電話： 037-466333
Email: service@repairtw.com
Line id: @zzzz
www.repairtw.com

No.	Name	Setting Range	Default
n8-48	Pull-In Current	20 to 200%	30%

■ n8-49: d-Axis Current for High Efficiency Control (OLV/PM)

Sets the d-axis current reference when running with high load at constant speed. When using an IPM motor, setting this parameter will increase the efficiency by using the motors reluctance torque and thereby reduce the energy consumption. This parameter should be set to 0 when using an SPM motor.

Although this setting seldom needs to be changed, please note the following:

- If motor operation is unstable when driving heavy loads, try lowering this setting.
- If motor parameters (E5-□□) have been changed, this value will be reset to 0 and will need to be readjusted.

No.	Name	Setting Range	Default
n8-49	d Axis Current for High Efficiency Control	-200.0 to 0.0%	Determined by E5-01

■ n8-51: Acceleration/Deceleration Pull-In Current (OLV/PM)

Sets the pull-in current during acceleration and deceleration as a percentage of the motor rated current (E5-03).

Adjustments to this setting may help in the following situations:

- Increase this setting when a large amount of starting torque is required.
- Lower this setting if there is excessive current during acceleration.

No.	Name	Setting Range	Default
n8-51	Acceleration/Deceleration Pull-In Current	0 to 200%	50%

■ n8-54: Voltage Error Compensation Time Constant (OLV/PM)

Sets the time constant for voltage error compensation. Make changes to this parameter under the following conditions:

- Adjust the value when hunting occurs at low speed.
- Increase the value in steps of 0.1 when hunting occurs with sudden load changes. Try to disable the compensation by setting n8-51 = 0 if increasing n8-54 does not help.
- Increase the value when oscillations occur at start.

No.	Name	Setting Range	Default
n8-54	Voltage Error Compensation Time Constant	0.00 to 10.00	1.00

■ n8-55: Load Inertia (OLV/PM)

Sets the ratio between motor inertia and the inertia of the connected machinery. If this value is set too low, the motor may not start very smoothly, and the STo fault (Motor Step-Out) may occur.

For large inertia loads or to improve speed control response, increase this setting from 0. Oscillations may occur if this value is set too high with low inertia load.

No.	Name	Setting Range	Default
n8-55	Load Inertia	0 to 3	0

■ n8-57: High Frequency Injection (AOLV/PM)

Detects motor speed by injecting a high frequency into the motor.

No.	Name	Setting Range	Default
n8-57	High Frequency Injection	0 or 1	0

Setting 0: Disabled

Disable n8-57 with SPM motors. The speed control range will be limited to approximately 1:20.

Setting 1: Enabled

Enabling n8-57 with IPM motors allows precise speed detection in a speed control range of approximately 1:100.

Note: **1.** Be aware that using this function will generate some audible noise in the motor up to a certain speed.
2. Set E1-09 to 0.0 when using zero speed control.

上位科技有限公司
購買、維修 此手冊零組件
電話： 037-466333
Email: service@repairtw.com
Line id: @zzzz
www.repairtw.com

■ n8-62: Output Voltage Limit

Sets the output voltage limit to prevent voltage saturation. Never set this value higher than the actual input voltage.

No.	Name	Setting Range	Default
n8-62 <1>	Output Voltage Limit	0.0 to 230.0 Vac	200 Vac

<1> Values shown here are for 200 V class drives. Double values when using a 400 V class unit.

■ n8-65: Speed Feedback Detection Control Gain during ov Suppression (OLV/PM)

Sets the gain for internal speed feedback detection control when overvoltage suppression is active. Although this setting rarely needs to be changed, adjustment may be necessary under the following conditions:

- Increase this setting if motor oscillation or hunting occurs when OV suppression is active.
- Decrease this setting in increments of 0.05 to decrease the drive responsiveness during OV suppression.

No.	Name	Setting Range	Default
n8-65	Speed Feedback Detection Control Gain during ov Suppression (OLV/PM)	0.00 to 10.00	1.50

5.10 o: Operator Related Settings

These parameters are for controlling the various functions, features, and display of the digital operator.

◆ o1: Digital Operator Display Selection

These parameters determine how data appears on the operator display.

■ o1-01: Drive Mode Unit Monitor Selection

The frequency reference display appears when the drive is powered up. Pressing the up arrow key will display the following data: frequency reference → rotational direction → output frequency → output current → o1-01 selection.

Parameter o1-01 lets the user select the content of the last monitor in this sequence.

No.	Name	Setting Range	Default
o1-01	Drive Mode Unit Monitor Selection	104 to 813 U1-04 (Control Mode) to U8-13 (DWEZ Version Control Monitor 3) <1>	106 (U1-06)

<1> U2-☐☐ and U3-☐☐ parameters cannot be selected.

■ o1-02: User Monitor Selection after Power Up

Selects which monitor parameter is displayed upon power up. This is done by entering the 1☐☐ part of U1-☐☐. Certain monitors are not available in some control modes. *Refer to U: Monitor Parameters on page 291* for a list of monitors.

No.	Name	Setting Range	Default
o1-02	User Monitor Selection after Power Up	1 to 5	1

上正科技有限公司
購買、維修 此手冊零組件
電話： 037-466333
Email: service@repairtw.com
Line id: @zzzz
www.repairtw.com

Setting 1: Frequency reference (U1-01)
Setting 2: Motor direction
Setting 3: Output frequency (U1-02)
Setting 4: Output current (U1-03)
Setting 5: User-selected monitor (set by o1-01)

■ o1-03: Digital Operator Display Selection

Sets the units used to display the frequency reference and output frequency. Set o1-03 to 3 for user-set units, then set parameters o1-10 and o1-11.

No.	Name	Setting Range	Default
o1-03	Digital Operator Display Selection	0 to 3	Determined by A1-02

Setting 0: 0.01 Hz units
Setting 1: 0.01% units (100% = max. output frequency)
Setting 2: r/min units (calculated by the max output frequency and the no. of motor poles)
Setting 3: User-set units (use o1-10, o1-11)

Set the value use for the maximum frequency reference to o1-10. The placement of the decimal point in this number should be set to o1-11.

For example, to have the maximum output frequency displayed as “100.00”, set the o1-10 = 1000 and o1-11 = 2 (i.e., 1000 with 2 decimal points).

Note: **1.** Parameter o1-03 allows the programmer to change the units used in the following parameters and monitors:
- U1-01: frequency reference
- U1-02: output frequency
- U1-05: motor speed
- U1-16: output frequency after softstarter (accel/decel ramp generator)
- d1-01 to d1-17: frequency references

2. Setting o1-03 to 2 requires that the number of motor poles be entered to E2-04, E4-04, and E5-04.

■ o1-04: V/f Pattern Display Unit

Determines the units used for the frequency reference when setting parameters that create the V/f pattern: E1-04, E1-06, E1-09, E1-11, and E2-04. For motor 2, this includes parameters E3-04, E3-06, E3-07, E3-09, and E3-11.

Enabled only in vector control modes (CLV, AOLV/PM, CLV/PM).

No.	Name	Setting Range	Default
o1-04	V/f Pattern Display Unit	0 or 1	Determined by A1-02

Setting 0: Hertz
Setting 1: r/min
Note: For motor 2, o1-04 can only be set to 0 for Hertz.

■ o1-10: User-Set Display Units Maximum Value

Determines the display value that is equal to the maximum output frequency.

No.	Name	Setting Range	Default
o1-10	User-Set Display Units Maximum Value	1 to 60000	Determined by o1-03

■ o1-11: User-Set Display Units Decimal Display

Determines how many decimal points should be used to set and display the frequency reference.

No.	Name	Setting Range	Default
o1-11	User-Set Display Units Decimal Display	0 to 3	Determined by o1-03

Setting 0: No decimal point
Setting 1: One decimal point
Setting 2: Two decimal points
Setting 3: Three decimal points

上正科技有限公司
購買、維修 此手冊零組件
電話： 037-466333
Email: service@repairtw.com
Line id: @zzzz
www.repairtw.com

◆ o2: Digital Operator Keypad Functions

These parameters determine the functions assigned to the operator keys.

■ o2-01: LO/RE (LOCAL/REMOTE) Key Function Selection

Parameter o2-01 determines whether the LO/RE key on the digital operator will be enabled or not for switching between LOCAL and REMOTE.

No.	Name	Setting Range	Default
o2-01	LO/RE Key Function Selection	0 or 1	1

Setting 0: Disabled

The LO/RE key is disabled.

Setting 1: Enabled

The LO/RE switches between LOCAL and REMOTE operation. Switching is possible during stop only. When LOCAL is selected, the LED indicator on the LO/RE key will light up.

WARNING! *Sudden Movement Hazard. The drive may start unexpectedly if the Run command is already applied when switching from LOCAL mode to REMOTE mode when b1-07 = 1, resulting in death or serious injury. Check all mechanical or electrical connections thoroughly before making any setting changes to o2-01 and b1-07. Table 5.41 lists the setting combinations for o2-01 and b1-07.*

Table 5.41 LO/RE Key and b1-07

o2-01	b1-07	Switch from LOCAL to REMOTE	Switch from REMOTE to LOCAL
0	0	Not possible	Not possible
	1	Not possible	Not possible
1	0	Will not run until a new Run command is entered.	Run not possible
	1	If a Run command is entered, the drive will start running as soon as the LO/RE key is pushed to change from LOCAL to REMOTE.	Run not possible

■ o2-02: STOP Key Function Selection

Determines if the STOP key on the digital operator can still be used to stop drive operation when the drive is being controlled from a remote source (i.e., not from digital operator).

No.	Name	Setting Range	Default
o2-02	STOP Key Function Selection	0 or 1	1

Setting 0: Disabled
Setting 1: Enabled

The STOP key can be used to terminate drive operation, even if the Run command source is not assigned to the digital operator. If the drive is stopped by pressing the STOP key, the Run command must be cycled to restart the drive.

■ o2-03: User Parameter Default Value

Once drive parameters are set up completely, the values set can be saved as user-set default values using parameter o2-03. Once this has been done, the "Initialize Parameters" parameter (A1-03) will offer the choice of "1110: User Initialize". Choosing A1-03 = "1110: User Initialize" will reset all parameters to the values saved as user-set defaults. *Refer to A1-03: Initialize Parameters on page 131* for details on drive initialization.

No.	Name	Setting Range	Default
o2-03	User Parameter Default Value	0 to 2	0

Setting 0: No change (awaiting command)
Setting 1: Set User Initialize values

The current parameter settings are saved as user-set default for a later User Initialize. Once o2-03 is set to 1 and the ENTER key is pressed, the values are saved and the display returns to 0.

Setting 2: Clear User Initialize Values

All user-set defaults for "User Initialize" are cleared. Once o2-03 is set to 2 and the ENTER key is pressed, the values are erased and the display returns to 0.

上百科技有限公司
購買、維修 此手冊零組件
電話： 037-466333
Email: service@repairtw.com
Line id: @777
www.repairtw.com

■ o2-04: Drive Model Selection

This parameter must be set when replacing the control board or the terminal board for any reason. For information on the drive model selection, see *Defaults by Drive Model Selection (o2-04) and ND/HD (C6-01) on page 457*.

NOTICE: *Drive performance will suffer if the correct drive capacity is not set to o2-04, and protective functions will fail to operate properly.*

No.	Name	Setting Range	Default
o2-04	Drive Model Selection	-	Determined by drive capacity

■ o2-05: Frequency Reference Setting Method Selection

Determines if the ENTER key must be pressed after changing the frequency reference using the digital operator while in the Drive Mode.

No.	Name	Setting Range	Default
o2-05	Frequency Reference Setting Method Selection	0 or 1	0

Setting 0: ENTER key required

Every time the frequency reference is changed using the digital operator, the ENTER key must be pressed for the drive to accept the change.

Setting 1: ENTER key not required

The output frequency changes immediately when the reference is changed by the up or down arrow keys on the digital operator. The ENTER key does not need to be pressed. The frequency reference is saved for 5 s after it is changed.

■ o2-06: Operation Selection when Digital Operator is Disconnected

Determines if the drive will stop when the digital operator is removed in LOCAL mode or when b1-02 or b1-16 is set to 0. When the operator is reconnected, the display will indicate that it was disconnected.

No.	Name	Setting Range	Default
o2-06	Digital Operator Disconnection Operation	0 or 1	0

Setting 0: Continue operation

The operation is continued.

Setting 1: Trigger a fault

The operation is stopped and an “oPr” fault is triggered. The motor coasts to stop.

■ o2-07: Motor Direction at Power Up when Using Operator

Determines the direction the motor will rotate after the drive is powered up and the Run command is given from the digital operator.

Note: This parameter is effective only when the Run command is set to be given from the digital operator (b1-02, b1-16 = 0).

No.	Name	Setting Range	Default
o2-07	Motor Direction at Power Up when Using Operator	0 or 1	0

Setting 0: Forward
Setting 1: Reverse

◆ o3: Copy Function

上正科技有限公司
購買、維修 此手冊零組件
電話： 037-466333
Email: service@repairtw.com
Line id: @zzzz
www.repairtw.com

These parameters control the digital operator’s Copy function. The Copy function lets the user store all parameter settings into the memory of the digital operator, and easily transfer those settings to other drives (requires that the other drives be the same model, capacity, and have the same control mode setting). See ***Copy Function Related Displays on page 332*** for a description of errors and displays.

■ o3-01 Copy Function Selection

Setting o3-01 will instruct the drive to Read, Write, or Verify parameters settings.

No.	Name	Setting Range	Default
o3-01	Copy Function Selection	0 to 3	0

0: Copy Select (no function)
1: INV --> OP READ

All parameters are copied from the drive to the digital operator.

Note: The copy protection for the digital operator is enabled by default. To unlock copy protection, set o3-01 = 1.

2: OP --> INV WRITE

All parameters are copied from the digital operator to the drive.

3: OP<-->INV VERIFY

Parameters in the drive are compared with the parameter settings saved on the digital operator to see if they match.

■ o3-02 Copy Allowed Selection

Restricts or allows the use of the Copy function.

No.	Name	Setting Range	Default
o3-02	Copy Allowed Selection	0 or 1	0

0: Disabled
1: Enabled

◆ o4: Maintenance Monitor Settings

■ o4-01: Cumulative Operation Time Setting

Parameter o4-01 sets the cumulative operation time of the drive. The user can also manually set this parameter to begin keeping track of operation time from some desired value. Total operation time can be viewed in monitor U4-01.

Note: The value in o4-01 is set in 10 h units. For example, a setting of 30 will set the cumulative operation time counter to 300 h. 300 h will also be displayed in monitor U4-01.

No.	Name	Setting Range	Default
o4-01	Cumulative Operation Time Setting	0 to 9999 H	0 H

■ o4-02: Cumulative Operation Time Selection

Selects the conditions for how the drive keeps track of its total operation time. This time log can be viewed in U4-01.

No.	Name	Setting Range	Default
o4-02	Cumulative Operation Time Selection	0 or 1	0

Setting 0: Power on time

The drive logs the time it is connected to a power supply, regardless if the motor is running or not.

Setting 1: Run time

The drive logs the time that the output is active. This includes whenever the Run command is active (even if the motor is not rotating) and when there is voltage output.

■ o4-03: Cooling Fan Operation Time Setting

Sets the value for how long the cooling fan has been operating. This value can be viewed in monitor U4-03. Parameter o4-03 also sets the base value used for the cooling fan maintenance, which is displayed in U4-04. Be sure to reset this parameter back to 0 if the cooling fan is replaced.

上正科技有限公司
購買、維修、此手冊銷售
電話: 037-466333
E-mail: service@repairtw.com
Line id: @zzzz
www.repairtw.com

Note: 1. The value in o4-03 increases after every 10 hours of use. A setting of 30 will set the cooling fan operation time counter to 300 h. "300" will be displayed in monitor U4-03.
2. The cooling fan may require maintenance at an earlier date in harsher environments.

No.	Name	Setting Range	Default
o4-03	Cooling Fan Operation Time Setting	0 to 9999 H	0 H

■ o4-05: Capacitor Maintenance Setting

Sets value of the maintenance monitor for the DC bus capacitors displayed in U4-05 as a percentage of the total expected performance life. This value should be reset to 0 when the DC bus capacitors have been replaced.

Note: The actual maintenance time will depend on the environment where the drive is used.

No.	Name	Setting Range	Default
o4-05	Capacitor Maintenance Setting	0 to 150%	0%

■ o4-07: DC Bus Pre-Charge Relay Maintenance Setting

Sets the value of the softcharge bypass relay maintenance time displayed in U4-06 as a percentage of the total expected performance life. This value should be reset to 0 when the bypass relay has been replaced.

Note: The actual maintenance time will depend on the environment where the drive is used.

No.	Name	Setting Range	Default
o4-07	DC Bus Pre-charge Relay Maintenance Setting	0 to 150%	0%

■ o4-09: IGBT Maintenance Setting

Sets the value of the IGBT maintenance time displayed in U4-07 as a percentage of the total expected performance life. This value should be reset to 0 when the IGBTs have been replaced.

Note: The actual maintenance time will depend on the environment where the drive is used.

No.	Name	Setting Range	Default
o4-09	IGBT Maintenance Setting	0 to 150%	0%

■ o4-11: U2, U3 Initialization

When the drive is initialized, the fault trace and fault history monitors (U2-☐☐ and U3-☐☐) are not reset. Parameter o4-11 can be used to reset them.

No.	Name	Setting Range	Default
o4-11	U2, U3 Initialization	0 or 1	0

Setting 0: No action

The drive keeps the record already saved concerning fault trace and fault history.

Setting 1: Reset fault data

Resets the data for the U2-☐☐ and U3-☐☐ monitors. Once o4-11 is set to 1 and the ENTER key is pressed, fault data is erased and the display returns to 0.

■ o4-12: kWh Monitor Initialization

The kWh monitors U4-10 and U4-11 are not initialized when power is shut off or the drive is initialized. Use o4-12 to manually reset them.

上正科技有限公司
購買、維修 此手冊零組件
電話： 037-466333
Email: service@repairtw.com
Line id: @zzzz
www.repairtw.com

No.	Name	Setting Range	Default
o4-12	kWh Monitor Initialization	0 or 1	0

Setting 0: No Action

The kWh data are kept as they are.

Setting 1: Reset kWh Data

Resets the kWh counter. The monitors U4-10 and U4-11 will display “0” after they are initialized. Once o4-12 is set to 1 and the ENTER key is pressed, kWh data is erased and the display returns to 0.

■ o4-13: Number of Run Commands Counter Initialization

The Run command counter displayed in U4-02 is not reset when the power is cycled or the drive is initialized. Use o4-13 to reset U4-02.

No.	Name	Setting Range	Default
o4-13	Number of Run Commands Counter Initialization	0 or 1	0

Setting 0: No Action

The Run command data are kept as they are.

Setting 1: Number of Run Commands Counter

Resets the Run command counter. The monitor U4-02 will show 0. Once o4-13 is set to 1 and the ENTER key is pressed, the counter value is erased and the display returns to 0.

◆ q: DriveWorksEZ Parameters

These parameters are reserved for use with DriveWorksEZ. Refer to the DriveWorksEZ manual for more information.

◆ r: DriveWorksEZ Connection Parameters

These parameters are reserved for use with DriveWorksEZ. Refer to the DriveWorksEZ manual for more information.

◆ T: Motor Tuning

Auto-Tuning automatically sets and tunes parameters required for optimal motor performance.

Refer to Auto-Tuning on page 109 for details on Auto-Tuning parameters.

上正科技有限公司
購買、維修 此手冊零組件
電話： 037-466333
Email: service@repairtw.com
Line id: @zzzz
www.repairtw.com

5.11 U: Monitor Parameters

Monitor parameters let the user view various aspects of drive performance using the digital operator display. Some monitors can be output from terminals FM and AM by assigning the specific monitor parameter number (U□-□□) to H4-01 and H4-04. *Refer to H4-01, H4-04: Multi-Function Analog Output Terminal FM, AM Monitor Selection on page 239* for details on assigning functions to an analog output.

◆ U1: Operation Status Monitors

Status monitors display drive status data such as output frequency and output current. Refer to *U1: Operation Status Monitors on page 447* for a complete list of U1-□□ monitors and descriptions.

◆ U2: Fault Trace

These monitor parameters are used to view the status of various drive aspects when a fault occurs.

This information is helpful for finding out why a fault occurred. Refer to *U2: Fault Trace on page 449* for a complete list of U2-□□ monitors and descriptions.

U2-□□ monitors are not reset when the drive is initialized. *Refer to o4-11: U2, U3 Initialization on page 289* for instructions on how to reset these monitor values.

◆ U3: Fault History

These parameters display faults that have occurred during operation as well as the drive operation time when those faults occurred. Refer to *U3: Fault History on page 450* for a complete list of U3-□□ monitors and descriptions.

U3-□□ monitors are not reset when the drive is initialized. *Refer to o4-11: U2, U3 Initialization on page 289* for instructions on how to reset these monitor values.

王正科技有限公司
購買、維修 此手冊零組件
電話： 037-466333
Email: service@repairtw.com
Line id: @zzzz
www.repairtw.com

◆ U4: Maintenance Monitors

Maintenance monitors show:

- Runtime data of the drive and cooling fans, and number of Run commands issued
- Maintenance data and replacement information for various drive components
- kWh data
- Highest peak current that has occurred and output frequency at the time the peak current occurred
- Motor overload status information
- Detailed information about the present Run command and frequency reference source selection

Refer to U4: Maintenance Monitors on page 450 for a complete list of U4-□□ monitors and descriptions.

◆ U5: PID Monitors

These monitors display various aspects of PID control. *Refer to PID Block Diagram on page 154* for details on how these monitors display PID data.

U5: PID Monitors on page 451 has a complete list of U5-□□ monitors and descriptions.

◆ U6: Operation Status Monitors

Control monitors show:

- Reference data for the output voltage and vector control
- Data on PM motor rotor synchronization, forward phase compensation, and flux positioning
- Pulse data from the PG motor encoder
- Pulse data for Zero Servo control
- ASR and Feed Forward control monitors
  Refer to *Figure 5.35* on page *171* and *Figure 5.36* on page *172* for details and an illustration showing where monitors are located in the ASR block.

- The offset value added to the frequency reference by the frequency offset function. *Refer to Setting 44, 45, 46: Offset frequency 1, 2, 3 on page 221*.
- The bias value added to the frequency reference by the Up/Down 2 function (see *Setting 75, 76: Up 2, Down 2 command on page 223*)

Refer to *U6: Operation Status Monitors on page 452* for a complete list of U6-☐☐ monitors and descriptions.

◆ U8: DriveWorksEZ Monitors

These monitors are reserved for use with DriveWorksEZ.

A complete description of the U8-☐☐ monitors can be found in the DriveWorksEZ instruction manual.

上正科技有限公司
購買、維修 此手冊零組件
電話： 037-466333
Email: service@repairtw.com
Line id: @zzzz
www.repairtw.com

6

Troubleshooting

This chapter provides descriptions of the drive faults, alarms, errors, related displays, and guidance for troubleshooting. This chapter can also serve as a reference guide for tuning the drive during a trial run.

6.1 SECTION SAFETY 294
6.2 MOTOR PERFORMANCE FINE-TUNING 296
6.3 DRIVE ALARMS, FAULTS, AND ERRORS 300
6.4 FAULT DETECTION 306
6.5 ALARM DETECTION 319
6.6 OPERATOR PROGRAMMING ERRORS 325
6.7 AUTO-TUNING FAULT DETECTION 328
6.8 COPY FUNCTION RELATED DISPLAYS 332
6.9 DIAGNOSING AND RESETTING FAULTS 334
6.10 TROUBLESHOOTING WITHOUT FAULT DISPLAY 336

上正科技有限公司
購買、維修 此手冊零組件
電話： 037-466333
Email: service@repairtw.com
Line id: @zzzz
www.repairtw.com

6.1 Section Safety

⚠ DANGER

Electrical Shock Hazard

Do not connect or disconnect wiring while the power is on.

Failure to comply will result in death or serious injury.

⚠ WARNING

Electrical Shock Hazard

Do not operate equipment with covers removed.

Failure to comply could result in death or serious injury.

The diagrams in this section may illustrate drives without covers or safety shields to display details. Be sure to reinstall covers or shields before operating the drives and run the drives according to the instructions described in this manual.

Always ground the motor-side grounding terminal.

Improper equipment grounding could result in death or serious injury by contacting the motor case.

Do not touch terminals before the capacitors have fully discharged.

Failure to comply could result in death or serious injury.

Before wiring terminals, disconnect all power to the equipment. The internal capacitor remains charged even after the drive input power is turned off. After shutting off the power, wait for at least the amount of time specified on the drive before touching any components.

上正科技有限公司
購買、維修此手冊零組件
電話： 037-466333
Email: service@repairtw.com
Line Id: @zzzz
www.repairtw.com

Do not allow unqualified personnel to perform work on the drive.

Failure to comply could result in death or serious injury.

Installation, maintenance, inspection and servicing must be performed only by authorized personnel familiar with installation, adjustment and maintenance of AC drives.

Do not perform work on the drive while wearing loose clothing, jewelry, or without eye protection.

Failure to comply could result in death or serious injury.

Remove all metal objects such as watches and rings, secure loose clothing and wear eye protection before beginning work on the drive.

Do not remove covers or touch circuit boards while the power is on.

Failure to comply could result in death or serious injury.

Fire Hazard

Tighten all terminal screws to the specified tightening torque.

Loose electrical connections could result in death or serious injury by fire due to overheating of electrical connections.

Do not use an improper voltage source.

Failure to comply could result in death or serious injury by fire.

Verify that the rated voltage of the drive matches the voltage of the incoming drive input power before applying power.

⚠ WARNING

Do not use improper combustible materials.

Failure to comply could result in death or serious injury by fire.

Attach the drive to metal or other noncombustible material.

NOTICE

Observe proper electrostatic discharge procedures (ESD) when handling the drive and circuit boards.

Failure to comply may result in ESD damage to the drive circuitry.

Never connect or disconnect the motor from the drive while the drive is outputting voltage.

Improper equipment sequencing could result in damage to the drive.

Do not use unshielded cable for control wiring.

Failure to comply may cause electrical interference resulting in poor system performance. Use shielded twisted-pair wires and ground the shield to the ground terminal of the drive.

Do not allow unqualified personnel to use the product.

Failure to comply could result in damage to the drive or braking circuit.

Carefully review instruction manual TOBPC72060000 when connecting a dynamic braking option to the drive.

Do not modify the drive circuitry.

Failure to comply could result in damage to the drive and will void warranty.

Yaskawa is not responsible for modification of the product made by the user.

Check all the wiring after installing the drive and connecting other devices to ensure that all connections are correct.

Failure to comply could result in damage to the drive.

上正科技有限公司
購買、維修 此手冊零組件
電話： 037-466333
Email: service@repairtw.com
Line id: @zzzz
www.repairtw.com

6.2 Motor Performance Fine-Tuning

This section offers helpful information for counteracting oscillation, hunting, or other problems that occur while performing a trial run. Refer to the section below that corresponds to the motor control method used.

Note: This section describes parameters that are commonly edited and may be set incorrectly. Consult Yaskawa for more information on detailed settings and fine-tuning the drive.

◆ Fine-Tuning V/f Control and V/f Control with PG

Table 6.1 Parameters for Fine-Tuning Performance in V/f and V/f w/PG

Problem	Parameter No.	Corrective Action	Default	Suggested Setting
Motor hunting and oscillation at speeds between 10 and 40 Hz	Hunting Prevention Gain (n1-02)	• If insufficient motor torque relative to the size of the load causes hunting, reduce the setting. • When motor hunting and oscillation occur with a light load, increase the setting. • Lower this setting if hunting occurs when using a motor with a relatively low inductance, such as a high-frequency motor or a motor with a larger frame size.	1.00	0.10 to 2.00
• Motor noise • Motor hunting and oscillation at speeds up to 40 Hz	Carrier Frequency Selection (C6-02)	• If the motor noise is too loud, increase the carrier frequency. • When motor hunting and oscillation occur at speeds up to 40 Hz, lower the carrier frequency. • The default setting for the carrier frequency depends on the drive capacity (o2-04) and the Duty Selection (C6-01).	1 (2 kHz)	1 to max. setting
• Poor torque or speed response • Motor hunting and oscillation	Torque Compensation Primary Delay Time (C4-02)	• If motor torque and speed response are too slow, decrease the setting. • If motor hunting and oscillation occur, increase the setting.	200 ms <1>	100 to 1000 ms
• Poor motor torque at speeds below 10 Hz • Motor hunting and oscillation	Torque Compensation Gain (C4-01)	• If motor torque is insufficient at speeds below 10 Hz, increase the setting. • If motor hunting and oscillation with a relatively light load, decrease the setting.	1.00	0.50 to 1.50
• Poor motor torque at low speeds • Motor instability at motor start	Mid Output Voltage A (E1-08) Minimum Output Voltage (E1-10)	• If torque is insufficient at speeds below 10 Hz, increase the setting. • If motor instability occurs at motor start, decrease the setting. **Note:** The recommended setting value is for 200 V class drives. Double this value when using a 400 V class drive.	E1-08: 15.0 V E1-10: 9.0 V <2>	Default setting ±5 V
Poor speed precision (V/f control)	Slip Compensation Gain (C3-01)	After setting the motor-rated current (E2-01), motor-rated slip (E2-02), and motor no-load current (E2-03), adjust the slip compensation gain (C3-01).	0.0 (no slip compensation)	0.5 to 1.5
Poor speed precision (V/f control with PG)	ASR Proportional Gain 1 (C5-01) ASR Integral Time 1 (C5-02) <3> <4>	Adjust the ASR proportional gain 1 (C5-01) and the ASR integral time 1 (C5-02).	C5-01: 0.20 C5-02: 0.200	Proportional gain = 0.10 to 1.00 Integral time = 0.100 to 2.000

上林科技有限公司 購買、維修、配件組件 電話：037-486333 mail:service@repairtw.com line id: @222

<1> Default setting value is dependent on parameter A1-02, Control Method Selection, and o2-04, Drive Model Selection.
<2> Default settings change when the Control Method is changed (A1-02) or a different V/f pattern is selected using parameter E1-03.
<3> ASR in V/f Control with PG only controls the output frequency, and therefore does not allow the high gain settings possible when using Close Loop Vector control.
<4> Refer to *C5: Automatic Speed Regulator (ASR) on page 171* for details on Automatic Speed Regulator (ASR).

◆ Fine-Tuning Open Loop Vector Control

Table 6.2 Parameters for Fine-Tuning Performance in OLV

Problem	Parameter No.	Corrective Action	Default	Suggested Setting
• Poor motor torque and speed response • Motor hunting and oscillation at speeds between 10 and 40 Hz	AFR Gain (n2-01)	• If motor torque and speed response are too slow, gradually decrease the setting by 0.05. • If motor hunting and oscillation occur, gradually increase the setting by 0.05.	1.00	0.50 to 2.00
• Poor motor torque and speed response • Motor hunting and oscillation at speeds between 10 and 40 Hz	AFR Time Constant 1 (n2-02)	• To improve motor torque speed response, gradually reduce this setting by 10 ms and check the performance. • If motor hunting and oscillation occur as a result of load inertia, gradually increase the setting by 50 ms and check the performance. **Note:** Ensure that n2-02 ≤ n2-03. When changing n2-02, set C4-02 (Torque Compensation Primary Delay Time Constant 1) accordingly.	50 ms	50 to 2000 ms
Overvoltage trips when accelerating, decelerating, or during sudden speed or load changes.	AFR Time Constant 2 (n2-03)	• If overvoltage occur, gradually increase this setting by 50 ms. • If response is slow, gradually reduce this setting by 10 ms. **Note:** Ensure that n2-02 ≤ n2-03. When making adjustments to n2-03, increase the value of C4-06 (Torque Compensation Primary Delay Time 2) proportionally.	750 ms	750 to 2000 ms
	Torque Compensation Primary Delay Time Constant 2 (C4-06)	• If overvoltage trips occur, gradually increase this setting by 10 ms and check the performance. • If response is slow, gradually reduce this setting by 2 ms and check the performance. **Note:** Ensure that C4-02 ≤ C4-06. When changing C4-06 (Torque Compensation Primary Delay Time Constant 2), increase the value of n2-03 proportionally.	150 ms	150 to 750 ms

Problem	Parameter No.	Corrective Action	Default	Suggested Setting
• Poor motor torque and speed response • Motor hunting and oscillation	Torque Compensation Primary Delay Time Constant 1 (C4-02)	• To improve motor torque speed response, gradually reduce this setting by 2 ms and check the performance. • If motor hunting and oscillation occur, gradually increase this setting by 10 ms. **Note:** Ensure that C4-02 ≤ C4-06. When making adjustments to C4-02, increase the AFR time constant (n2-02) proportionally.	20 ms <1>	20 to 100 ms <1>
Poor speed response and stability	Slip Compensation Primary Delay Time Constant (C3-02)	• If response is slow, gradually decrease the setting by 10 ms. • If speed is unstable, gradually increase the setting by 10 ms.	200 ms <2>	100 to 500 ms
Poor speed precision	Slip Compensation Gain (C3-01)	• If speed is too slow, gradually increase the setting by 0.1 ms. • If speed is too fast, gradually decrease the setting by 0.1 ms.	1.0 <2>	0.5 to 1.5
Poor speed precision during regenerative operation	Slip Compensation Selection During Regeneration (C3-04)	Enable slip compensation during regeneration by setting parameter C3-04 = 1.	0	1
• Motor noise • Motor hunting and oscillation occur at speeds below 10 Hz	Carrier Frequency Selection (C6-02)	• If there is too much motor noise, the carrier frequency is too low. • If motor hunting and oscillation occur at low speeds, reduce the carrier frequency. **Note:** The default setting for the carrier frequency depends on the drive capacity (o2-04) and Duty Selection (C6-01).	1 (2 kHz)	0 to max. setting
• Poor motor torque at low speeds • Poor speed response • Motor instability at start	Mid Output Voltage A (E1-08) Minimum Output Voltage (E1-10)	• If motor torque and speed response are too slow, increase the setting. • If the motor exhibits excessive instability at start-up, reduce the setting. **Note:** The default value is for 200 V class units. Double this value when using a 400 V class drive. When working with a relatively light load, increasing this value too much can result in overtorque.	E1-08: 11.0 V <2> E1-10: 2.0 V <2>	Default setting ±2 V

<1> Default setting value is dependent on parameter A1-02, Control Method Selection, and o2-04, Drive Model Selection.
<2> Default settings change when the Control Method is changed (A1-02) or a different V/f pattern is selected using parameter E1-03.

When using OLV, leave the torque compensation gain (C4-01) at its default setting of 1.00.

◆ Fine-Tuning Closed Loop Vector Control

Table 6.3 Parameters for Fine-Tuning the Performance in CLV

Problem	Parameter No.	Corrective Action	Default	Suggested Setting
• Poor torque or speed response • Motor hunting and oscillation	ASR Proportional Gain 1 (C5-01) ASR Proportional Gain 2 (C5-03) <1>	• If motor torque and speed response are too slow, gradually increase the ASR gain setting by 5. • If motor hunting and oscillation occur, decrease the setting. • Parameter C5-03 needs to be adjusted only if C5-05 > 0. • Perform ASR Auto-Tuning if possible	20.00	10.00 to 50.00
• Poor torque or speed response • Motor hunting and oscillation	ASR Integral Time 1 (C5-02) ASR Integral Time 2 (C5-04) <1>	• If motor torque and speed response are too slow, decrease the setting. • If motor hunting and oscillation occur, increase the setting. • Parameter C5-04 needs to be adjusted only if C5-05 > 0.	0.500 s	0.300 to 1.000 s
Trouble maintaining the ASR proportional gain or the integral time at the low or high end of the speed range	ASR Gain Switching Frequency (C5-07) <1>	Have the drive switch between two different ASR proportional gain and integral time settings based on the output frequency.	0.0 Hz	0.0 to max output frequency
Motor hunting and oscillation	ASR Primary Delay Time Constant (C5-06) <1>	• If motor torque and speed response are too slow, gradually decrease the setting by 0.01. • If the load is less rigid and subject to oscillation, increase this setting.	0.004 s	0.004 to 0.020 s
• Motor noise • Control motor hunting and oscillation occur at speeds below 3 Hz.	Carrier Frequency Selection (C6-02)	• If there is too much motor noise, the carrier frequency is too low. • If motor hunting and oscillation occur at low speeds, reduce the carrier frequency. **Note:** The default setting for the carrier frequency depends on the drive capacity (o2-04) and Drive Duty Selection (C6-01).	1	2.0 kHz to the max. setting
Overshoot or undershoot when the speed changes with high inertia load.	Feed Forward Control (n5-01) Inertia Tuning (T1-01 = 8)	Enable Feed Forward by setting parameter n5-01 = 1 and perform Inertia Tuning. If Inertia Tuning is not possible, set parameters C5-17, C5-18, and n5-03 manually.	0	1

<1> Refer to *C5: Automatic Speed Regulator (ASR) on page 171* for details on Automatic Speed Regulator (ASR).

◆ Fine-Tuning Open Loop Vector Control for PM Motors

Table 6.4 Parameters for Fine-Tuning Performance in OLV/PM

Problem	Parameter No.	Corrective Action	Default	Suggested Setting
Motor performance not as desired	Motor parameters (E1-□□, E5-□□)	• Check the settings for base and maximum frequency in the E1-□□ parameters • Check E5-□□ parameters and make sure all motor data has been set correctly. Be careful not to enter line to line data where single-phase data is required, and vice versa. • Perform Auto-Tuning.	-	-
Poor motor torque and speed response	Load Inertia Ratio (n8-55)	Adjust parameter n8-55 to meet the load inertia ratio of the machine.	0	Close to the actual load inertia ratio
	Speed Feedback Detection Gain (n8-45)	Increase the speed feedback detection gain (n8-45).	0.8	Increase in increments of 0.05
	Torque Compensation (C4-01)	Enable torque compensation.	0	1

上証科技有限公司 購買、維修 手冊零組件 電話：0937 46 9 33 Email: service@repairtw.com www.repairtw.com

Problem	Parameter No.	Corrective Action	Default	Suggested Setting
Oscillation at start or the motor stalls	Pull-In Current during Accel/ Decel (n8-51)	Increase the pull-in current set in n8-51	50%	Increase in steps of 5%
	DC Injection Braking Current (b2-02), DC Injection Time at Start (b2-03)	Use DC Injection Braking at start to align the rotor. Be aware that this operation can cause a short reverse rotation at start.	b2-02 = 50% b2-03 = 0.0 s	b2-03 = 0.5 s Increase b2-02 if needed
	Load Inertia Ratio (n8-55)	Increase the load inertia ratio.	0	Close to the actual load inertia ratio
Stalling or oscillation occur when load is applied during constant speed	Pull-In Current Compensation Time Constant (n8-47)	Decrease n8-47 if hunting occurs during constant speed	5.0 s	Reduce in increments of 0.2 s
	Pull-In Current (n8-48)	Increase the pull-in current in n8-48.	30%	Increase in increments of 5%
	Load Inertia Ratio (n8-55)	Increase the load inertia ratio.	0	Close to the actual load inertia ratio
Hunting or oscillation occur	Speed feedback Detection Gain (n8-45)	Decrease the speed feedback detection gain in n8-45.	0.8	Increase in increments 0.05
STO fault trips even if the load is not too high	Induced Voltage Constant (E5-09 or E5-24)	• Check and adjust the induced voltage constant. • Check the motor name plate, the data sheet or contact the motor manufacturer for getting data.	dep. on drive capacity and motor code	Refer to the motor data sheet or the nameplate.
Stalling or STO occurs at high speed as the output voltage becomes saturated.	Output Voltage Limit (n8-62)	Set the value of the input voltage to parameter n8-62	200 Vac or 400 Vac	Set equal to input voltage

◆ Fine-Tuning Advanced Open Loop Vector Control for PM Motors

Table 6.5 Parameters for Fine-Tuning Performance in AOLV/PM

Problem	Parameter No.	Corrective Action	Default	Suggested Setting
• Poor torque or speed response • Motor hunting and oscillation	ASR Proportional Gain 1 (C5-01) ASR Proportional Gain 2 (C5-03)	• If motor torque and speed response are too slow, gradually increase the setting by 5. • If motor hunting and oscillation occur, decrease the setting. • Parameter C5-03 needs to be adjusted only if C5-05 > 0.	10.00	5.00 to 30.00 <1>
• Poor torque or speed response • Motor hunting and oscillation	ASR Integral Time 1 (C5-02) ASR Integral Time 2 (C5-04)	• If motor torque and speed response are too slow, decrease the setting. • If motor hunting and oscillation occur, increase the setting. • Parameter C5-03 needs to be adjusted only if C5-05 > 0	0.500 s	0.300 to 1.000 s <1>
Trouble maintaining the ASR proportional gain or the integral time at the low or high end of the speed range	ASR Gain Switching Frequency (C5-07)	Have the drive switch between two different ASR proportional gain and integral time settings based on the output frequency.	0.0%	0.0 to Max r/min
Motor hunting and oscillation	ASR Primary Delay Time Constant (C5-06)	If the load is less rigid and subject to oscillation, increase this setting.	0.010 s	0.016 to 0.035 s <1>
Motor stalling makes normal operation impossible	Motor parameters (E1-□□, E5-□□)	Check the motor parameter settings.	-	-

<1> Optimal settings will differ between no-load and loaded operation.

上海科普電子有限公司
購買、維修 此手冊委託作
電話：037-466333
Email: service@repairtw.com
Line id: @zzzz
www.repairtw.com

◆ Fine-Tuning Closed Loop Vector Control for PM Motors

Table 6.6 Parameters for Fine-Tuning Performance in CLV/PM

Problem	Parameter No.	Corrective Action	Default	Suggested Setting
• Poor torque or speed response • Motor hunting and oscillation	ASR Proportional Gain 1 (C5-01) ASR Proportional Gain 2 (C5-03)	• If motor torque and speed response are too slow, gradually increase the setting by 5. • If motor hunting and oscillation occur, decrease the setting. • Perform ASR Gain Auto-Tuning if possible	20.00	10.00 to 50.00 <1>
• Poor torque or speed response • Motor hunting and oscillation	ASR Integral Time 1 (C5-02) ASR Integral Time 2 (C5-04)	• If motor torque and speed response are too slow, decrease the setting. • If motor hunting and oscillation occur, increase the setting.	0.500 s	0.300 to 1.000 s <1>
ASR proportional gain or the integral time at the low or high end of the speed range	ASR Gain Switching Frequency (C5-07)	Have the drive switch between two different ASR proportional gain and integral time settings based on the output frequency.	0.0%	0.0 to Max r/min
Motor hunting and oscillation	ASR Primary Delay Time Constant (C5-06)	If the load is less rigid and subject to oscillation, increase this setting.	0.016 s	0.004 to 0.020 s <1>
Motor stall makes normal operation impossible	Motor parameters (E1-□□, E5-□□)	Check the motor parameter settings.	-	-
Overshoot or undershoot at speed changes with high inertia load.	Feed Forward Control (n5-01) Inertia Auto-Tuning (T2-01 = 8)	Enable Feed Forward Control by setting parameter n5-01 = 1 and perform Inertia Auto-Tuning. If Auto-Tuning cannot be performed set parameters C5-17, C5-18 and n5-03 manually.	0	1

<1> Optimal settings will differ between no-load and loaded operation.

◆ Parameters to Minimize Motor Hunting and Oscillation

In addition to the parameters discussed on page *296* through *298*, the following parameters indirectly affect motor hunting and oscillation.

Table 6.7 Parameters that Affect Control Performance in Applications

Name (Parameter No.)	Application
Dwell Function (b6-01 through b6-04)	Prevents motor speed loss by maintaining the output frequency when working with heavy loads or when there is powerful backlash on the machine side.
Droop Function (b7-01, b7-02)	Used to balance the load between two motors that drive the same load. Can be used when the control method (A1-02) is set to 3 or 7.
Accel/Decel Time (C1-01 through C1-11)	Adjusting accel and decel times will affect the torque presented to the motor during acceleration or deceleration.
S-Curve Characteristics (C2-01 through C2-04)	Prevents shock at the beginning and end of acceleration and deceleration.
Jump Frequency (d3-01 through d3-04)	Skips over the resonant frequencies of connected machinery.
Analog Filter Time Constant (H3-13)	Prevents fluctuation in the analog input signal due to noise.
Stall Prevention (L3-01 through L3-06, L3-11)	• Prevents motor speed loss and overvoltage. Used when the load is too heavy and also during sudden acceleration/deceleration. • Adjustment is not normally required because Stall Prevention is enabled as a default. Disable Stall Prevention during deceleration (L3-04 = “0”) when using a braking resistor.
Torque Limits (L7-01 through L7-04, L7-06, L7-07)	• Sets the maximum torque for Open Loop Vector Control. • Ensure that the drive capacity is greater than the motor capacity when increasing this setting. Be careful when reducing this value because motor speed loss may occur with heavy loads.
Feed Forward Control (n5-01 through n5-03)	Used to increase response for acceleration/deceleration or to reduce overshooting when there is low machine rigidity and the gain of the speed controller (ASR) cannot be increased. The inertia ratio between the load and motor and the acceleration time of the motor running alone must be set.

上正科技有限公司
購買、維修 此手冊零組件
電話： 037-466333
Email: service@repairtw.com
Line id: @zzzz
www.repairtw.com

6.3 Drive Alarms, Faults, and Errors

◆ Types of Alarms, Faults, and Errors

Check the digital operator for information about possible faults if the drive or motor fails to operate. *Refer to Using the Digital Operator on page 87*.

If problems occur that are not covered in this manual, contact the nearest Yaskawa representative with the following information:

- Drive model
- Software version
- Date of purchase
- Description of the problem

Table 6.8 contains descriptions of the various types of alarms, faults, and errors that may occur while operating the drive.

Table 6.8 Types of Alarms, Faults, and Errors

Type	Drive Response
Faults	When the drive detects a fault: • The digital operator displays text that indicates the specific fault and the ALM indicator LED remains lit until the fault is reset. • The fault interrupts drive output and the motor coasts to a stop. • Some faults allow the user to select how the drive should stop when the fault occurs. • Fault output terminals MA-MC will close, and MB-MC will open. The drive will remain inoperable until that fault has been cleared. *Refer to Fault Reset Methods on page 335*.
Minor Faults and Alarms	When the drive detects an alarm or a minor fault: • The digital operator displays text that indicates the specific alarm or minor fault, and the ALM indicator LED flashes. • The drive generally continues running the motor, although some alarms allow the user to select a stopping method when the alarm occurs. • One of the multi-function contact outputs closes if set to be tripped by a minor fault (H2- □□ = 10), but not by an alarm. • The digital operator displays text indicating a specific alarm and ALM indicator LED flashes. To reset the a minor fault or alarm, remove whatever is causing the problem.
Operation Errors	When parameter settings conflict with one another or do not match hardware settings (such as with an option card), it results in an operation error. When the drive detects an operation error: • The digital operator displays text that indicates the specific error. • Multi-function contact outputs do not operate. The drive will not operate the motor until the error has been reset. Correct the settings that caused the operation error to clear the error.
Tuning Errors	Tuning errors occur while performing Auto-Tuning. When the drive detects a tuning error: • The digital operator displays text indicating the specific error. • Multi-function contact outputs do not operate. • Motor coasts to stop. Remove the cause of the error and repeat the Auto-Tuning process.
Copy Function Errors	These are the types of errors that can occur when using the optional digital operator or the USB Copy Unit to copy, read, or verify parameter settings. • The digital operator displays text indicating the specific error. • Multi-function contact outputs do not operate. Pressing any key on the operator will clear the fault. Find out what is causing the problem (such as model incompatibility) and try again.

購買、維修 此手冊零組件
037-466333
Email: service@repairtw.com
www.repairtw.com

◆ Alarm and Error Displays

■ Faults

Table 6.9 gives an overview of possible fault codes. As conditions such as overvoltage can trip both a fault and an alarm, it is important to distinguish between faults and alarms in order to find the right corrective action.

When the drive detects a fault, the ALM indicator LEDs lights and the fault code appears on the display. The drive fault contact MA-MB-MC will be triggered. If the ALM LED blinks and the code appearing on the operator screen is flashes, then an alarm has been detected. See *Minor Faults and Alarms on page 302* for a list of alarm codes.

Table 6.9 Fault Displays (1)

Digital Operator Display		Name	Page
LED Operator	LCD Operator		
boL	boL	Braking Transistor Overload Fault	306
bUS	bUS	Option Communication Error	306
CE	CE	MEMOBUS/Modbus Communication Error	306
CF	CF	Control Fault	306
CPF00, CPF01 <1>	CPF00, CPF01	Control Circuit Error	306
CPF02	CPF02	A/D Conversion Error	306
CPF03	CPF03	Control Board Connection Error	307
CPF06	CPF06	EEPROM Memory Data Error	307
CPF07, CPF08	CPF07, CPF08	Terminal Board Connection Error	307
CPF20, CPF21 <1>	CPF20, CPF21	Control Circuit Error	307
CPF22	CPF22	Hybrid IC Error	307
CPF23	CPF23	Control Board Connection Error	307
CPF24	CPF24	Drive Unit Signal Fault	307
CPF26 to CPF34	CPF26 to CPF34	Control Circuit Error	307
dEv	dEv	Excessive Speed Deviation (for Control Mode with PG)	308
dv1	dv1	Z Pulse Fall Detection	308
dv2	dv2	Z Pulse Noise Fault Detection	308
dv3	dv3	Inversion Detection	308
dv4	dv4	Inversion Prevention Detection	308
dWFL	dWFL	DriveWorksEZ Fault	308
E5	E5	SI-T3 Watchdog Timer Error	308
EF0	EF0	Option Card External Fault	309
EF1 to EF8	EF1 to EF8	External Fault (input terminal S1 to S8)	309
Err	Err	EEPROM Write Error	309
FAn	FAn	Internal Fan Fault	309
FbH	FbH	Excessive PID Feedback	309
FbL	FbL	PID Feedback Loss	310
GF	GF	Ground Fault	310
LF	LF	Output Phase Loss	310
LF2	LF2	Current Imbalance	310
nSE	nSE	Node Setup Error	310
oC	oC	Overcurrent	311
oFA00	oFA00	Option Card Connection Error (CN5-A)	311
oFA01	oFA01	Option Card Fault (CN5-A)	311
oFA03 to oFA06	oFA03 to oFA06	Option Card Error (CN5-A)	311
oFA10, oFA11	oFA10, oFA11	Option Card Error (CN5-A)	311
oFA12 to oFA17	oFA12 to oFA17	Option Card Connection Error (CN5-A)	311
oFA30 to oFA43	oFA30 to oFA43	Option Card Connection Error (CN5-A)	311
oFb00	oFb00	Option Card Connection Error (CN5-B)	312
oFb01	oFb01	Option Card Fault (CN5-B)	312
oFb02	oFb02	Option Card Fault (CN5-B)	312
oFb03, oFb11	oFb03, oFb11	Option Card Error (CN5-B)	312
oFb12 to oFb17	oFb12 to oFb17	Option Card Connection Error (CN5-B)	312
oFb30 to oFb43	oFb30 to oFb43	Option Card Connection Error (CN5-B)	312
oFC00	oFC00	Option Card Connection Error (CN5-C)	312
oFC01	oFC01	Option Card Fault (CN5-C)	312
oFC02	oFC02	Option Card Fault (CN5-C)	312

上正科技有限公司
購買、維修 此手冊零組件
電話： 037-466338
Email: service@repairtw.com
Line id: @zzzz
www.repairtw.com

Table 6.10 Fault Displays (2)

Digital Operator Display		Name	Page
LED Operator	LCD Operator		
oFC03, oFC11	oFC03, oFC11	Option Card Error (CN5-C)	313
oFC12 to oFC17	oFC12 to oFC17	Option Card Connection Error (CN5-C)	313
oFC30 to oFC43	oFC30 to oFC43	Option Card Fault (CN5-C)	313
oH	oH	Heatsink Overheat	313
oH1	oH1	Heatsink Overheat	313
oH3	oH3	Motor Overheat 1 (PTC input)	313
oH4	oH4	Motor Overheat 2 (PTC input)	313
oL1	oL1	Motor Overload	314
oL2	oL2	Drive Overload	314
oL3	oL3	Overtorque Detection 1	314
oL4	oL4	Overtorque Detection 2	314
oL5	oL5	Mechanical Weakening Detection 1	314
oL7	oL7	High Slip Braking oL	315
oPr	oPr	Operator Connection Fault	315
oS	oS	Overspeed (for Control Mode with PG)	315
ov	ov	Overvoltage	315
PF	PF	Input Phase Loss	316
PGo	PGo	PG Disconnect (for Control Mode with PG)	316
PGoH	PGoH	PG Hardware Fault (when using PG-X3)	316
rF	rF	Braking Resistor Fault	316
rH	rH	Dynamic Braking Resistor	316
rr	rr	Dynamic Braking Transistor	316
SEr	SEr	Too Many Speed Search Restarts	316
STo	STo	Pull-Out Detection	317
SvE	SvE	Zero-Servo Fault	317
UL3	UL3	Undertorque Detection 1	317
UL4	UL4	Undertorque Detection 2	317
UL5	UL5	Mechanical Weakening Detection 2	317
Uv1	Uv1	Undervoltage	317
Uv2	Uv2	Control Power Supply Undervoltage	318
Uv3	Uv3	Soft Charge Circuit Fault	318
voF	voF	Output Voltage Detection Fault	318
–	–	–	–

<1> Displayed as CPF00 or CPF20 when occurring at drive power up. When one of the faults occurs after successfully starting the drive, the display will show CPF01 or CPF21.

上正科技有限公司
購買、維修 此手冊零組件
電話： 037-466333
Email: service@repairtw.com
Line id: @zzzz
www.repairtw.com

■ Minor Faults and Alarms

Table 6.11 give an overview of possible alarm codes. As conditions such as overvoltage can trip both a fault and alarm, it is important to distinguish between faults and alarms in order to find the right corrective action.

If an alarm is detected, the ALM LED will blink and the alarm code display flashes. The majority of alarms will trigger a digital output programmed for alarm output (H2-□□ = 10). If the ALM LED lights without blinking, this means that a fault has been detected (not an alarm). Information on fault codes can be found in *Faults on page 301*.

Table 6.11 Minor Fault and Alarm Displays

Digital Operator Display		Name	Minor Fault Output (H2-□□ = 10)	Page
LED Operator	LCD Operator			
AEr	AEr	SI-T Station Number Setting Error (CC-Link, CANopen, MECHATROLINK-II)	YES	319
bb	bb	Drive Baseblock	No output	319
boL	boL	Braking Transistor Overload Fault	YES	319
bUS	bUS	Option Card Communications Error	YES	319
CALL	CALL	Serial Communication Transmission Error	YES	319
CE	CE	MEMOBUS/Modbus Communication Error	YES	320
CrST	CrST	Cannot Reset	YES	320
dEv	dEv	Excessive Speed Deviation (for Control Mode with PG)	YES	320
dnE	dnE	Drive Disabled	YES	320
dWAL	dWAL	DriveWorksEZ Alarm	YES	308

Digital Operator Display		Name	Minor Fault Output (H2-□□ = 10)	Page
LED Operator	LCD Operator			
E5	E5	SI-T3 Watchdog Timer Error	YES	308
EF	EF	Run Command Input Error	YES	320
EF0	EF0	Option Card External Fault	YES	320
EF1 to	EF1 to EF8	External Fault (input terminal S1 to S8)	YES	320
FbH	FbH	Excessive PID Feedback	YES	321
FbL	FbL	PID Feedback Loss	YES	321
Hbb	Hbb	Safe Disable Signal Input	YES	321
HbbF	HbbF	Safe Disable Signal Input	YES	321
HCA	HCA	Current Alarm	YES	321
LT-1	LT-1	Cooling Fan Maintenance Time	No output <1>	321
LT-2	LT-2	Capacitor Maintenance Time	No output <1>	322
LT-3	LT-3	Soft Charge Bypass Relay Maintenance Time	No output <1>	322
LT-4	LT-4	IGBT Maintenance Time (50%)	No output <1>	322
oH	oH	Heatsink Overheat	YES	322
oH2	oH2	Drive Overheat	YES	322
oH3	oH3	Motor Overheat	YES	322
oL3	oL3	Overtorque 1	YES	322
oL4	oL4	Overtorque 2	YES	322
oL5	oL5	Mechanical Weakening Detection 1	YES	323
oS	oS	Overspeed (for Control Mode with PG)	YES	323
ov	ov	Overvoltage	YES	323
PASS	PASS	MEMOBUS/Modbus Test Mode Complete	No output	323
PGo	PGo	PG Disconnect (for Control Mode with PG)	YES	323
PGoH	PGoH	PG Hardware Fault (when using PG-X3)	YES	323
rUn	rUn	During Run 2, Motor Switch Command Input	YES	323
SE	SE	MEMOBUS/Modbus Test Mode Fault	YES	323
TrPC	TrPC	IGBT Maintenance Time (90%)	YES	323
UL3	UL3	Undertorque 1	YES	324
UL4	UL4	Undertorque 2	YES	324
UL5	UL5	Mechanical Weakening Detection 2	YES	317
Uv	Uv	Undervoltage	YES	324
voF	voF	Output Voltage Detection Fault	YES	324

上正科技有限公司
購買、維修 此手冊零組件
電話： 037-466333
Email: service@repairtw.com
Line id: @zzzz
www.repairtw.com

<1> Output when H2-□□ = 2F.

■ Operation Errors

Table 6.12 Operation Error Displays

Digital Operator Display		Name	Page
LED Operator	LCD Operator		
oPE01	oPE01	Drive Unit Setting Error	325
oPE02	oPE02	Parameter Setting Range Error	325
oPE03	oPE03	Multi-Function Input Setting Error	325
oPE04	oPE04	Terminal Board Mismatch Error	326
oPE05	oPE05	Run Command Selection Error	326
oPE06	oPE06	Control Method Selection Error	326
oPE07	oPE07	Multi-Function Analog Input Selection Error	326
oPE08	oPE08	Parameter Selection Error	326
oPE09	oPE09	PID Control Selection Error	326
oPE10	oPE10	V/f Data Setting Error	327
oPE11	oPE11	Carrier Frequency Setting Error	327
oPE13	oPE13	Pulse Train Monitor Selection Error	327
oPE15	oPE15	Torque Control Setting Error	327
oPE16	oPE16	Energy Saving Constants Error	327
oPE18	oPE18	Online Tuning Parameter Setting Error	327
–	–	–	–

■ Auto-Tuning Errors

Table 6.13 Auto-Tuning Error Displays

Digital Operator Display		Name	Page
LED Operator	LCD Operator		
End1	End1	Excessive V/f Setting	328
End2	End2	Motor Iron Core Saturation Coefficient Error	328
End3	End3	Rated Current Setting Alarm	328
End4	End4	Adjusted Slip Value Fell Below Lower Limit	328
End5	End5	Resistance Between Lines Error	328
End6	End6	Leakage Inductance Alarm	328
End7	End7	No-Load Current Alarm	328
Er-01	Er-01	Motor Data Error	329
Er-02	Er-02	Alarm	329
Er-03	Er-03	STOP button Input	329
Er-04	Er-04	Line-to-Line Resistance Error	329
Er-05	Er-05	No-Load Current Error	329
Er-08	Er-08	Rated Slip Error	329
Er-09	Er-09	Acceleration Error	329
Er-10	Er-10	Motor Direction Error	329
Er-11	Er-11	Motor Speed Error	330
Er-12	Er-12	Current Detection Error	330
Er-13	Er-13	Leakage Inductance Error	330
Er-14	Er-14	Motor Speed Error 2	330
Er-15	Er-15	Torque Saturation Error	330
Er-16	Er-16	Inertia ID Error	330
Er-17	Er-17	Reverse Prohibited Error	330
Er-18	Er-18	Induction Voltage Error	330
Er-19	Er-19	PM Inductance Error	330
Er-20	Er-20	Stator Resistance Error	330
Er-21	Er-21	Z Pulse Correction Error	331

上正科技有限公司
購買、維修 此手冊零組件
電話：037-466333
Email: service@repairtw.com
Line id: @zzzz
www.repairtw.com

■ Errors and Displays When Using the Copy Function

Table 6.14 Copy Errors

Digital Operator Display		Name	Page
LED Operator	LCD Operator		
CoPy	CoPy	Writing parameter settings (flashing)	332
CPEr	CPEr	Control mode of the drive does not match	332
CPyE	CPyE	Error writing data	332
CSEr	CSEr	Error occurred in the copy function	332
dFPS	dFPS	Drive models do not match.	332
End	End	Task completed	332
iFEr	iFEr	Communication error	332
ndAT	ndAT	Model, voltage class, capacity, and/or control mode differ	332
rdEr	rdEr	Error reading data	333
rEAd	rEAd	Reading parameter settings (flashing)	333

Digital Operator Display		Name	Page
LED Operator	LCD Operator		
uAEr	vAEr	Voltage class and/or drive capacity does not match	333
uFyE	vFyE	Parameter settings in the drive and those saved to the copy function are not the same	333
urFy	vrFy	Comparing parameter settings (flashing)	333

上正科技有限公司
購買、維修 此手冊零組件
電話： 037-466333
Email: service@repairtw.com
Line id: @zzzz
www.repairtw.com

6.4 Fault Detection

◆ Fault Displays, Causes, and Possible Solutions

Faults are detected for drive protection, and cause the drive to stop. When a fault occurs, the fault output terminal MA-MB-MC is triggered. Faults have to be cleared manually after removing the cause to start running the drive again.

Table 6.15 Detailed Fault Displays, Causes, and Possible Solutions

Digital Operator Display		Fault Name
boL	boL	Braking Transistor Overload Fault
		The braking transistor has reached its overload level.
Cause		**Possible Solution**
The wrong braking resistor is installed.		• Select the optimal braking resistor.
Digital Operator Display		**Fault Name**
bUS	bUS	Option Communication Error
		• After establishing initial communication, the connection was lost. • Only detected when the run command frequency reference is assigned to an option card.
Cause		**Possible Solution**
No signal received from the PLC.		• Check for faulty wiring. • Correct the wiring. • Check for disconnected cables and short circuits. Repair as needed.
Faulty communications wiring or a short circuit exists.		
A communications data error occurred due to noise.		• Check the various options available to minimize the effects of noise. • Take steps to counteract noise in the control circuit, main circuit, and ground wiring. • Ensure that other equipment such as switches or relays do not cause noise. Use surge suppressors if necessary. • Use only recommended cables or other shielded line. Ground the shield on the controller side or on the drive input power side. • Separate all communication wiring from drive power lines. Install an EMC noise filter to the drive power supply input.
The option card is damaged.		• Replace the option card if there are no problems with the wiring and the error continues to occur.
The option card is not properly connected to the drive.		• The connector pins on the option card are not properly lined up with the connector pins on the drive. • Reinstall the option card.
Digital Operator Display		**Fault Name**
CE	CE	MEMOBUS/Modbus Communication Error
		Control data was not received for the CE detection time set to H5-09.
Cause		**Possible Solution**
Faulty communications wiring or a short circuit exists.		• Check for faulty wiring. • Correct the wiring. • Check for disconnected cables and short circuits. Repair as needed.
Communication data error occurred due to noise.		• Check the various options available to minimize the effects of noise. • Take steps to counteract noise in the control circuit, main circuit, and ground wiring. • Use only recommended cables or other shielded line. Ground the shield on the controller side or on the drive input power side. • Ensure that other equipment such as switches or relays do not cause noise and use surge suppressors if required. • Separate all communication wiring from drive power lines. Install an EMC noise filter to the drive power supply input.
Digital Operator Display		**Fault Name**
CF	CF	Control Fault
		A torque limit was reached continuously for three seconds or longer while ramping to stop in Open Loop Vector Control.
Cause		**Possible Solution**
Motor parameters are not set properly.		Check the motor parameter settings and repeat Auto-Tuning.
Torque limit is too low.		Set the torque limit to the most appropriate setting (L7-01 through L7-04).
Load inertia is too big.		• Adjust the deceleration time (C1-02, -04, -06, -08). • Set the frequency to the minimum value and interrupt the Run command when the drive finishes decelerating.
Digital Operator Display		**Fault Name**
CPF00 or CPF01 <1>	CPF00 or CPF01 <1>	Control Circuit Error
Cause		**Possible Solution**
There is a self diagnostic error in control circuit.		• Cycle power to the drive. • If the problem continues, replace either the control board or the entire drive. For instructions on replacing the control board, contact Yaskawa or your nearest sales representative.
Connector on the operator is damaged.		• Replace the operator.
Digital Operator Display		**Fault Name**
CPF02	CPF02	A/D Conversion Error
		An A/D conversion error or control circuit error occurred.
Cause		**Possible Solution**
Control circuit is damaged.		• Cycle power to the drive. • If the problem continues, replace either the control board or the entire drive. For instructions on replacing the control board, contact Yaskawa or your nearest sales representative.

上正科技有限公司 購買、維修 此手冊零組件 電話：037-466333 Email：service@repairtw.com Line id：@222 www.repairtw.com

Digital Operator Display		Fault Name
CPF03	CPF03	Control Board Connection Error Connection error between the control board and the drive
Cause		**Possible Solution**
There is a connection error.		• Turn the power off and check the connection between the control board and the drive. • If the problem continues, replace either the control board or the entire drive.
Drive fails to operate properly due to noise interference.		• Check the various options available to minimize the effects of noise. • Take steps to counteract noise in the control circuit, main circuit, and ground wiring. • Use only recommended cables or other shielded line. Ground the shield on the controller side or on the drive input power side. • Ensure that other equipment such as switches or relays do not cause noise and use surge suppressors if required. • Separate all communication wiring from drive power lines. Install an EMC noise filter to the drive power supply input.
Digital Operator Display		**Fault Name**
CPF06	CPF06	EEPROM Memory Data Error There is an error in the data saved to EEPROM.
Cause		**Possible Solution**
There is an error in EEPROM control circuit.		• Turn the power off and check the connection between the control board and the drive. • If the problem continues, replace either the control board or the entire drive. For instructions on replacing the control board, contact Yaskawa or your nearest sales representative.
The power supply was switched off when parameters were being saved to the drive.		Reinitialize the drive (A1-03).
Digital Operator Display		**Fault Name**
CPF07	CPF07	Terminal Board Connection Error
CPF08	CPF08	
Cause		**Possible Solution**
There is a fault connection between the terminal board and control board.		• Turn the power off and reconnect the control circuit terminal board. • If the problem continues, replace either the control board or the entire drive. For instructions on replacing the control board, contact Yaskawa or your nearest sales representative.
Digital Operator Display		**Fault Name**
CPF20 or CPF21 <1>	CPF20 or CPF21	Control Circuit Error
Cause		**Possible Solution**
Hardware is damaged.		• Cycle power to the drive. • If the problem continues, replace either the control board or the entire drive. For instructions on replacing the control board, contact Yaskawa or your nearest sales representative.
Digital Operator Display		**Fault Name**
CPF22	CPF22	Hybrid IC Error
Cause		**Possible Solution**
Hybrid IC on the main circuit is damaged.		• Cycle power to the drive. *Refer to Diagnosing and Resetting Faults on page 334*. • If the problem continues, replace either the control board or the entire drive. For instructions on replacing the control board, contact Yaskawa or your nearest sales representative.
Digital Operator Display		**Fault Name**
CPF23	CPF23	Control Board Connection Error Connection error between the control board and the drive
Cause		**Possible Solution**
Hardware is damaged.		• Turn the power off and check the connection between the control board and the drive. • If the problem continues, replace either the control board or the entire drive. For instructions on replacing the control board, contact Yaskawa or your nearest sales representative.
Digital Operator Display		**Fault Name**
CPF24	CPF24	Drive Unit Signal Fault The drive capacity cannot be detected correctly (drive capacity is checked when the drive is powered up).
Cause		**Possible Solution**
Hardware is damaged.		Replace either the control board or the entire drive. For instructions on replacing the control board, contact Yaskawa or your nearest sales representative.
Digital Operator Display		**Fault Name**
CPF26 to CPF34	CPF26 to CPF34	Control Circuit Error CPU error
Cause		**Possible Solution**
Hardware is damaged.		Replace either the control board or the entire drive. For instructions on replacing the control board, contact Yaskawa or your nearest sales representative.

上正科技有限公司
購買、維修 此手冊零組件
電話： 037-466333
Email: service@repairtw.com
Line id: @zzzz
www.repairtw.com

Digital Operator Display		Fault Name
dEv	dEv	Speed Deviation (for Control Mode with PG)
		The deviation between the speed reference and speed feedback is greater than the setting in F1-10 for longer than the time set to F1-11.
Cause		**Possible Solution**
Load is too heavy.		Reduce the load.
Acceleration and deceleration times are set too short.		Increase the acceleration and deceleration times (C1-01 through C1-08).
The load is locked up.		Check the machine.
Parameters are not set appropriately.		Check the settings of parameters F1-10 and F1-11.
Incorrect speed feedback scaling if terminal RP is used as speed feedback input in V/f control.		• Set H6-02 to the same value as the speed feedback signal frequency when the motor runs at maximum speed. • Adjust the speed feedback signal using parameters H6-03 through H6-05. • Make sure the speed feedback signal frequency does not exceed the maximum input frequency of terminal RP.
Motor brake engaged.		Ensure the motor brake releases properly.
Digital Operator Display		**Fault Name**
dv1	dv1	Z Pulse Fault
		The motor turned one full rotation without the Z pulse being detected.
Cause		**Possible Solution**
PG encoder is not connected, not wired properly, or is damaged.		• Make sure the PG encoder is properly connected and all shielded lines are properly grounded. • If the problem continues after cycling power, then replace either the PG option card or the PG encoder itself.
Digital Operator Display		**Fault Name**
dv2	dv2	Z Pulse Noise Fault Detection
		The Z pulse is out of phase by more than 5 degrees for the number of times specified in parameter F1-17.
Cause		**Possible Solution**
Noise interference along the PG cable.		Separate the PG cable lines from the source of the noise (very possibly drive output wiring).
PG cable is not wired properly.		Rewire the PG encoder and make sure all shielded lines are properly grounded.
PG option card or the PG encoder is damaged.		If the problem continues after cycling power, then replace either the PG option card or the PG encoder itself.
Digital Operator Display		**Fault Name**
dv3	dv3	Inversion Detection
		The torque reference and acceleration are in opposite directions from one another (one is in reverse and the other is forward) while at the same time the speed reference and actual motor speed differ by over 30% for the number of pulses set to F1-18.
Cause		**Possible Solution**
The Z pulse offset is not set properly to E5-11.		Set the value for Δθ to E5-11 as specified on the motor nameplate. Replacing the PG encoder or changing the application so that the motor rotates in reverse instead requires readjustment of the Z pulse offset.
An external force on the load side has caused the motor to move.		• Make sure the motor is rotating in the right direction. • Look for any problems on the load side that might be causing the motor to rotate in the opposite direction.
Noise interference along the PG cable affecting the A or B pulse.		Rewire the PG encoder and make sure all lines including shielded line are properly connected.
PG encoder is disconnected, not wired properly, or the PG option card or PG itself is damaged.		
Rotational direction for the PG encoder set to F1-05 is the opposite of the order of the motor lines.		Make sure motor lines for each phase (U, V, W) are connected properly.
Digital Operator Display		**Fault Name**
dv4	dv4	Inversion Prevention Detection
		Pulses indicate that the motor is rotating in the opposite direction of the speed reference. Set the number of pulses to trigger inverse detection to F1-19. **Note:** Disable inverse detection in applications where the motor may rotate in the opposite direction of the speed reference. Setting F1-19 to 0 disables this feature.
Cause		**Possible Solution**
The Z pulse offset is not set properly to E5-11.		• Set the value for Δθ to E5-11 as specified on the motor nameplate. • If the problem continues after cycling power, then replace either the PG option card or the PG encoder itself. Replacing the PG encoder or changing the application so that the motor rotates in reverse instead requires readjustment of the Z-pulse offset.
Noise interference along the PG cable affecting the A or B pulse.		• Make sure the motor is rotating in the correct direction. • Look for any problems on the load side that might be causing the motor to rotate in the opposite direction.
PG encoder is disconnected, not wired properly, or the PG option card or PG itself is damaged.		• Rewire the PG encoder and make sure all lines including shielded line are properly connected. • If the problem continues after cycling power, then replace either the PG option card or the PG encoder itself.
Digital Operator Display		**Fault Name**
dWAL	dWAL	DriveWorksEZ Fault
dWFL	dWFL	
Cause		**Possible Solution**
Fault output by DriveWorksEZ		• Correct whatever caused the fault.
Digital Operator Display		**Fault Name**
E5	E5	SI-T3 Watchdog Timer Error
		The watchdog has timed out.
Cause		**Possible Solution**
Data has not been received from the PLC, triggering the watchdog timer.		⇒ Execute DISCONNECT or ALM_CLR, then issue a CONNECT command or SYNC_SET command and proceed to phase 3.

正能科技有限公司
維修、維護、保養
電話：02 46533
Email: service@repairtw.com
Line id: @zzzz
www.repairtw.com

Digital Operator Display		Fault Name
EF0	EF0	Option Card External Fault An external fault condition is present.
Cause		**Possible Solution**
An external fault was received from the PLC with other than F6-03 = 3 “alarm only” (the drive continued to run after external fault).		• Remove the cause of the external fault. • Remove the external fault input from the PLC.
Problem with the PLC program.		Check the PLC program and correct problems.
Digital Operator Display		**Fault Name**
EF1	EF1	External Fault (input terminal S1) External fault at multi-function input terminal S1.
EF2	EF2	External Fault (input terminal S2) External fault at multi-function input terminal S2.
EF3	EF3	External Fault (input terminal S3) External fault at multi-function input terminal S3.
EF4	EF4	External Fault (input terminal S4) External fault at multi-function input terminal S4.
EF5	EF5	External Fault (input terminal S5) External fault at multi-function input terminal S5.
EF6	EF6	External Fault (input terminal S6) External fault at multi-function input terminal S6.
EF7	EF7	External Fault (input terminal S7) External fault at multi-function input terminal S7
EF8	EF8	External Fault (input terminal S8) External fault at multi-function input terminal S8
Cause		**Possible Solution**
An external device has tripped an alarm function.		Remove the cause of the external fault and reset the fault.
Wiring is incorrect.		• Ensure the signal lines have been connected properly to the terminals assigned for external fault detection (H1-□□ = 20 to 2F). • Reconnect the signal line.
Incorrect setting of multi-function contact inputs.		• Check if the any unused terminals are set for H1-□□ = 20 to 2F (External Fault). • Change the terminal settings.
Digital Operator Display		**Fault Name**
Err	Err	EEPROM Write Error Data cannot be written to the EEPROM.
Cause		**Possible Solution**
Noise has corrupted data while writing to the EEPROM.		• Press the ENTER button. • Correct the parameter setting. • Cycle power to the drive. *Refer to Diagnosing and Resetting Faults on page 334*. • Replace either the control board or the entire drive. For instructions on replacing the control board, contact Yaskawa or your nearest sales representative.
Hardware problem.		• Replace either the control board or the entire drive. For instructions on replacing the control board, contact Yaskawa or your nearest sales representative.
Digital Operator Display		**Fault Name**
FAn	FAn	Internal Fan Fault Fan or magnetic contactor failed.
Cause		**Possible Solution**
Internal cooling fan has malfunctioned (models 2A0360, 2A0415, 4A0362 to 4A0675).		Cycle power to the drive and see if the fault is still present. Check if the fan is operating or not. Verify the cumulative operation time of the fan using monitor U4-03, and the fan maintenance timer in U4-04. If the cooling fan has passed its expected performance life or is damaged in some way, follow the instructions in this manual to replace it.
Fault detected in the internal cooling fan or magnetic contactor to the power supply (models 2A0250 to 2A0415, 4A0165 to 4A0675).		Cycle power to the drive and see if the fault is still present. If the fault still occurs, either replace the control circuit board or the entire unit. For instructions on replacing the power board, contact the Yaskawa sales office directly or your nearest Yaskawa representative.
Digital Operator Display		**Fault Name**
FbH	FbH	Excessive PID Feedback PID feedback input is greater than the level set b5-36 for longer than the time set to b5-37. To enable fault detection, set b5-12 = 2 or 5.
Cause		**Possible Solution**
Parameters are not set appropriately.		Check the settings of parameters b5-36 and b5-37.
Wiring for PID feedback is incorrect.		Correct the wiring.
There is a problem with the feedback sensor.		• Check the sensor on the control side. • Replace the sensor if damaged.

上正科技有限公司
購買、維修 此手冊零組件
電話： 037-466333
Email: service@repairtw.com
Line id: @2222
www.repairtw.com

Digital Operator Display		Fault Name
FbL	FbL	PID Feedback Loss
		This fault occurs when PID feedback loss detection is programmed to trigger a fault (b5-12 = 2) and the PID feedback level is below the detection level set to b5-13 for longer than the time set to b5-14.
Cause		**Possible Solution**
Parameters are not set appropriately.		Check the settings of parameters b5-13 and b5-14.
Wiring for PID feedback is incorrect.		Correct the wiring.
There is a problem with the feedback sensor.		Check the sensor on the controller side. If damaged, replace the sensor.
Digital Operator Display		**Fault Name**
GF	GF	Ground Fault
		• A current short to ground exceeded 50% of rated current on the output side of the drive. • Setting L8-09 to 1 enables ground fault detection in models 2A0030 through 2A0415 and 4A0018 through 4A0675.
Cause		**Possible Solution**
Motor insulation is damaged.		• Check the insulation resistance of the motor. • Replace the motor.
A damaged motor cable is creating a short circuit.		• Check the motor cable. • Remove the short circuit and turn the power back on.
		• Check the resistance between the cable and the ground terminal ⏚. • Replace the cable.
The leakage current at the drive output is too high.		• Reduce the carrier frequency. • Reduce the amount of stray capacitance.
The drive started to run during a current offset fault or while coasting to a stop.		• The value set exceeds the allowable setting range while the drive automatically adjusts the current offset (this happens only when attempting to restart a PM motor that is coasting to stop). • Enable Speed Search at start (b3-01 = 1). • Perform Speed Search 1 or 2 (H1-□□ = 61 or 62) via one of the external terminals. **Note:** Speed Search 1 and 2 are the same when using PM OLV.
Hardware problem.		Replace either the control board or the entire drive. For instructions on replacing the control board, contact Yaskawa or your nearest sales representative.
Digital Operator Display		**Fault Name**
LF	LF	Output Phase Loss
		• Phase loss on the output side of the drive. • Phase Loss Detection is enabled when L8-07 is set to 1 or 2.
Cause		**Possible Solution**
The output cable is disconnected.		• Check for wiring errors and ensure the output cable is connected properly. • Correct the wiring.
The motor winding is damaged.		• Check the resistance between motor lines. • Replace the motor if the winding is damaged.
The output terminal is loose.		• Apply the tightening torque specified in this manual to fasten the terminals. ***Refer to Wire Size on page 74***.
The rated current of the motor being used is less than 5% of the drive rated current.		Check the drive and motor capacities.
An output transistor is damaged.		Replace either the control board or the entire drive. For instructions on replacing the control board, contact Yaskawa or your nearest sales representative.
A single-phase motor is being used.		The drive cannot operate a single phase motor.
Digital Operator Display		**Fault Name**
LF2	LF2	Output current imbalance (detected when L8-29 = 1)
		One or more of the phases in the output current is lost.
Cause		**Possible Solution**
Phase loss has occurred on the output side of the drive.		• Check for faulty wiring or poor connections on the output side of the drive. • Correct the wiring.
Terminal wires on the output side of the drive are loose.		Apply the tightening torque specified in this manual to fasten the terminals. ***Refer to Wire Size on page 74***.
The output circuit is damaged.		Replace either the control board or the entire drive. For instructions on replacing the control board, contact Yaskawa or your nearest sales representative.
Motor impedance or motor phases are uneven.		• Measure the line-to-line resistance for each motor phase. Ensure all values are the same. • Replace the motor.
Digital Operator Display		**Fault Name**
nSE	nSE	Node Setup Error
		A terminal assigned to the node setup function closed during run.
Cause		**Possible Solution**
The node setup terminal closed during run.		Stop the drive when using the node setup function.
A run command was issued while the node setup function was active.		

上正科技有限公司
購買、維修 此手冊零組件
電話：037-466333
Email: service@repairtw.com
Line id: @2222
www.repairtw.com

Digital Operator Display		Fault Name
oC	oC	Overcurrent
		Drive sensors have detected an output current greater than the specified overcurrent level.
Cause		**Possible Solution**
The motor has been damaged due to overheating or the motor insulation is damaged.		• Check the insulation resistance. • Replace the motor.
One of the motor cables has shorted out or there is a grounding problem.		• Check the motor cables. • Remove the short circuit and power the drive back up.
		• Check the resistance between the motor cables and the ground terminal ⏚. • Replace damaged cables.
The load is too heavy.		• Measure the current flowing into the motor. • Replace the drive with a larger capacity unit if the current value exceeds the rated current of the drive. • Determine if there is sudden fluctuation in the current level. • Reduce the load to avoid sudden changes in the current level or switch to a larger drive.
The acceleration or deceleration times are too short.		Calculate the torque needed during acceleration relative to the load inertia and the specified acceleration time. If the right amount of torque cannot be set, make the following changes: • Increase the acceleration time (C1-01, -03, -05, -07) • Increase the S-curve characteristics (C2-01 through C2-04) • Increase the capacity of the drive.
The drive is attempting to operate a specialized motor or a motor larger than the maximum size allowed.		• Check the motor capacity. • Ensure that the rated capacity of the drive is greater than or equal to the capacity rating found on the motor nameplate.
Magnetic contactor (MC) on the output side of the drive has turned on or off.		Set up the operation sequence so that the MC is not tripped while the drive is outputting current.
V/f setting is not operating as expected.		• Check the ratios between the voltage and frequency. • Set parameter E1-04 through E1-10 appropriately (E3-04 through E3-10 for motor 2). • Lower the voltage if it is too high relative to the frequency.
Excessive torque compensation.		• Check the amount of torque compensation. • Reduce the torque compensation gain (C4-01) until there is no speed loss and less current.
Drive fails to operate properly due to noise interference.		• Review the possible solutions provided for handling noise interference. • Review the section on handling noise interference and check the control circuit lines, main circuit lines, and ground wiring.
Overexcitation gain is set too high.		• Check if fault occurs simultaneously to overexcitation function operation. • Consider motor flux saturation and reduce the value of n3-13 (Overexcitation Deceleration Gain).
Run command applied while motor was coasting.		• Enable Speed Search at start (b3-01 = 1). • Program the Speed Search command input through one of the multi-function contact input terminals (H1-□□ = 61 or 62).
The wrong motor code has been entered for PM Open Loop Vector (Yaskawa motors only) or the motor data are wrong.		• Enter the correct motor code to E5-01. • If a non-Yaskawa PM motor is used, enter "FFFF" to E5-01. Set the correct motor data to the E5-□□ parameters or perform Auto-Tuning.
The motor control method and motor do not match.		• Check which motor control method the drive is set to (A1-02). • For IM motors, set A1-02 = "0", "1", "2", or "3". • For PM motors, set A1-02 = "5", "6" or "7".
The drives rated output current is too small.		Use a larger drive.
Digital Operator Display		**Fault Name**
oFA00	oFA00	Option Card Connection Error at Option Port CN5-A
		Option compatibility error
Cause		**Possible Solution**
The option card installed into port CN5-A is incompatible with the drive.		Check if the drive supports the option card that you are attempting to install. Contact Yaskawa for assistance.
A PG option card is connected to option port CN5-A		PG option boards are supported by option ports CN5-B and CN5-C only. Place the PG option card into the correct option port.
Digital Operator Display		**Fault Name**
oFA01	oFA01	Option Card Fault at Option Port CN5-A
		Option not properly connected
Cause		**Possible Solution**
The option board connection to port CN5-A is faulty.		• Turn the power off and reconnect the option card. • Check if the option card is properly plugged into the option port. Make sure the card is fixed properly. • If the option is not a communication option card, try to use the card in another option port. If it works there, replace the drive. If the error persists (oFb01 or oFC01 occur), replace the option board.
Digital Operator Display		**Fault Name**
oFA03 to oFA06	oFA03 to oFA06	Option card error occurred at option port CN5-A
oFA10, oFA11	oFA10, oFA11	
oFA12 to oFA17	oFA12 to oFA17	
oFA30 to oFA43	oFA30 to oFA43	
Cause		**Possible Solution**
Option card or hardware is damaged.		• Cycle power to the drive. • If the problem continues, replace either the control board or the entire drive. For instructions on replacing the control board, contact Yaskawa or your nearest sales representative.

維修 此手冊零組件
Email: service@repairtw.com
www.repairtw.com

Digital Operator Display		Fault Name
oFb00	oFb00	Option Card Fault at Option Port CN5-B
		Option compatibility error
Cause		**Possible Solution**
The option card installed into port CN5-B is incompatible with the drive.		Check if the drive supports the option card that you are attempting to install. Contact Yaskawa for assistance.
A communication option card has been installed in option port CN5-B.		Communication option cards are supported by option port CN5-A only. More than one comm. option cannot be installed.
Digital Operator Display		**Fault Name**
oFb01	oFb01	Option Card Fault at Option Port CN5-B
		Option not properly connected
Cause		**Possible Solution**
The option board connection to port CN5-B is faulty.		• Turn the power off and reconnect the option card. • Check if the option card is properly plugged into the option port. Make sure the card is fixed properly. • Try to use the card in another option port (in case of a PG option use port CN5-C). If option card still doesn't work there, replace the drive. If the error persists (oFA01 or oFC01 occur), replace the option board.
Digital Operator Display		**Fault Name**
oFb02	oFb02	Option Card Fault at Option Port CN5-B
		Same type of option card already connected
Cause		**Possible Solution**
An option card of the same type is already installed in option port CN5-A.		Except for PG options, each option card type can only be installed once. Make sure only one type of option card is connected.
An input option card is already installed in option port CN5-A.		Make sure that a comm. option, a digital input option, or an analog input option is installed. The same type of card cannot be installed twice.
Digital Operator Display		**Fault Name**
oFb03 to oFb11	oFb03 to oFb11	Option card error occurred at Option Port CN5-B
oFb12 to oFb17	oFb12 to oFb17	
oFb30 to oFb43	oFb30 to oFb43	
Cause		**Possible Solution**
Option card or hardware is damaged.		• Cycle power to the drive. • If the problem continues, replace either the control board or the entire drive. For instructions on replacing the control board, contact Yaskawa or your nearest sales representative.
Digital Operator Display		**Fault Name**
oFC00	oFC00	Option Card Connection Error at Option Port CN5-C
		Option compatibility error
Cause		**Possible Solution**
The option card installed into port CN5-C is incompatible with the drive.		Check if the drive supports the option card that you are attempting to instal. Contact Yaskawa for assistance.
A communication option card has been installed in option port CN5-C.		Communication option cards are supported by option port CN5-A only. More than one comm. option cannot be installed.
Digital Operator Display		**Fault Name**
oFC01	oFC01	Option Card Fault at Option Port CN5-C
		Option not properly connected
Cause		**Possible Solution**
The option board connection to port CN5-C is faulty.		• Turn the power off and reconnect the option card. • Check if the option card is properly plugged into the option port. Make sure the card is fixed properly. • Try to use the card in another option port (in case of a PG option use port CN5-B). If it works there, replace the drive. If the error persists (oFA01 or oFb01 occur), replace the option board.
Digital Operator Display		**Fault Name**
oFC02	oFC02	Option Card Fault at Option Port CN5-C
		Same type of option card already connected
Cause		**Possible Solution**
An option card of the same type is already installed in option port CN5-A or CN5-B.		Except for PG options, each option card type can only be installed once. Make sure only one type of option card is connected.
An input option card is already installed in option port CN5-A or CN5-B.		Make sure that a comm. option, a digital input option, or an analog input option is installed. The same type of card cannot be installed twice.
Three PG option boards are installed.		Maximum two PG option boards can be used at the same time. Remove the PG option board installed into option port CN5-A.

上正科技有限公司
購買、維修 此手冊零組件
電話： 037-466333
Email: service@repairtw.com
Line id: @zzzz
www.repairtw.com

Digital Operator Display		Fault Name
oFC03 to oFC11	oFC03 to oFC11	Option card error occurred at option port CN5-C
oFC12 to oFC17	oFC12 to oFC17	
oFC30 to oFC43	oFC30 to oFC43	
Cause		**Possible Solution**
Option card or hardware is damaged.		• Cycle power to the drive. • If the problem continues, replace either the control board or the entire drive. For instructions on replacing the control board, contact Yaskawa or your nearest sales representative.
Digital Operator Display		**Fault Name**
oH	oH	Heatsink Overheat The temperature of the heatsink exceeded the overheat pre-alarm level set to L8-02. Default value for L8-02 is determined by drive capacity (o2-04).
Cause		**Possible Solution**
Surrounding temperature is too high.		• Check the temperature surrounding the drive. Verify temperature is within drive specifications. • Improve the air circulation within the enclosure panel. • Install a fan or air conditioner to cool the surrounding area. • Remove anything near the drive that might be producing excessive heat.
Load is too heavy.		• Measure the output current. • Decrease the load. • Lower the carrier frequency (C6-02).
Internal cooling fan is stopped.		• Replace the cooling fan. ***Refer to Cooling Fan Component Names on page 352***. • After replacing the drive, reset the cooling fan maintenance parameter (o4-03 = 0).
Digital Operator Display		**Fault Name**
oH1	oH1	Overheat 1 (Heatsink Overheat) The temperature of the heatsink exceeded the drive overheat level. The overheat level is determined by drive capacity (o2-04).
Cause		**Possible Solution**
Surrounding temperature is too high.		• Check the temperature surrounding the drive. • Improve the air circulation within the enclosure panel. • Install a fan or air conditioner to cool the surrounding area. • Remove anything near the drive that might be producing excessive heat.
Load is too heavy.		• Measure the output current. • Lower the carrier frequency (C6-02). • Reduce the load.
Digital Operator Display		**Fault Name**
oH3	oH3	Motor Overheat Alarm (PTC Input) • The motor overheat signal to analog input terminal A1, A2, or A3 exceeded the alarm detection level. • Detection requires multi-function analog input H3-02, H3-06, or H3-10 be set to “E”.
Cause		**Possible Solution**
Motor has overheated		• Check the size of the load, the accel/decel times, and the cycle times. • Decrease the load. • Increase the acceleration and deceleration times (C1-01 through C1-08).
		• Adjust the preset V/f pattern (E1-04 through E1-10). This will mainly involve reducing E1-08 and E1-10. • Be careful not to lower E1-08 and E1-10 too much, as this reduces load tolerance at low speeds.
		• Check the motor rated current. • Enter the motor rated current as indicated on the motor nameplate (E2-01). • Ensure the motor cooling system is operating normally. • Repair or replace the motor cooling system.
Digital Operator Display		**Fault Name**
oH4	oH4	Motor Overheat Fault (PTC Input) • The motor overheat signal to analog input terminal A1, A2, or A3 exceeded the fault detection level. • Detection requires that multi-function analog input H3-02, H3-06, or H3-10 = “E”.
Cause		**Possible Solution**
Motor has overheated.		• Check the size of the load, the accel/decel times, and the cycle times. • Decrease the load. • Increase the acceleration and deceleration times (C1-01 through C1-08).
		• Adjust the preset V/f pattern (E1-04 through E1-10). This will mainly involve reducing E1-08 and E1-10. Be careful not to lower E1-08 and E1-10 too much because this reduces load tolerance at low speeds.
		• Check the motor rated current. • Enter the motor rated current as indicated on the motor nameplate (E2-01). • Ensure the motor cooling system is operating normally. • Repair or replace the motor cooling system.

上正科技有限公司
購買、維修 此手冊零組件
電話： 037-466333
Email: service@repairtw.com
Line id: @zzzz
www.repairtw.com

Digital Operator Display		Fault Name
oL1	oL1	Motor Overload The electronic motor overload protection tripped.
Cause		**Possible Solution**
Load is too heavy.		Reduce the load.
Cycle times are too short during acceleration and deceleration.		Increase the acceleration and deceleration times (C1-01 through C1-08).
A general purpose motor is driven below the rated speed with too high load.		• Reduce the load. • Increase the speed. • If the motor is supposed to operate at low speeds, either increase the motor capacity or use a motor specifically designed to operate in the desired speed range.
The output voltage is too high.		Adjust the user-set V/f patterns (E1-04 through E1-10). Parameters E1-08 and E1-10 may need to be reduced. Be careful not to lower E1-08 and E1-10 too much because this reduces load tolerance at low speeds.
The wrong motor rated current is set to E2-01.		• Check the motor-rated current. • Enter the value written on the motor nameplate to parameter E2-01.
The maximum output frequency is set incorrectly.		• Check the rated frequency indicated on the motor nameplate. • Enter the rated frequency to E1-06 (Base Frequency).
Multiple motors are running off the same drive.		Disable the motor protection function (L1-01 = 0) and install a thermal relay to each motor.
The electrical thermal protection characteristics and motor overload characteristics do not match.		• Check the motor characteristics. • Correct the type of motor protection that has been selected (L1-01). • Install an external thermal relay.
The electrical thermal relay is operating at the wrong level.		• Check the current rating listed on the motor nameplate. • Check the value set for the motor rated current (E2-01).
Motor overheated by overexcitation operation.		• Overexcitation increases the motor losses and the motor temperature. If applied too long, motor damage can occur. Prevent excessive overexcitation operation or apply proper cooling to the motor. • Reduce the excitation deceleration gain (n3-13). • Set L3-04 (Stall Prevention during Deceleration) to a value other than 4.
Speed Search related parameters are set incorrectly.		• Check values set to Speed Search related parameters. • Adjust the Speed Search current and Speed Search deceleration times (b3-02 and b3-03 respectively). • After Auto-Tuning, enable Speed Estimation Speed Search (b3-24 = 1).
Output current fluctuation due to input phase loss		Check the power supply for phase loss.
Digital Operator Display		**Fault Name**
oL2	oL2	Drive Overload The thermal sensor of the drive triggered overload protection.
Cause		**Possible Solution**
Load is too heavy.		Reduce the load.
Acceleration or deceleration times are too short.		Increase the settings for the acceleration and deceleration times (C1-01 through C1-08).
The output voltage is too high.		• Adjust the preset V/f pattern (E1-04 through E1-10). This will mainly involve reducing E1-08 and E1-10. • Be careful not to lower E1-08 and E1-10 excessively because this reduces load tolerance at low speeds.
Drive capacity is too small.		Replace the drive with a larger model.
Overload occurred when operating at low speeds.		• Reduce the load when operating at low speeds. • Replace the drive with a model that is one frame size larger. • Lower the carrier frequency (C6-02).
Excessive torque compensation.		Reduce the torque compensation gain (C4-01) until there is no speed loss but less current.
Speed Search related parameters are set incorrectly.		• Check the settings for all Speed Search related parameters. • Adjust the current used during Speed Search and the Speed Search deceleration time (b3-03 and b3-02 respectively). • After Auto-Tuning the drive, enable the Speed Estimation Speed Search (b3-24 = 1).
Output current fluctuation due to input phase loss		Check the power supply for phase loss.
Digital Operator Display		**Fault Name**
oL3	oL3	Overtorque Detection 1 The current has exceeded the value set for torque detection (L6-02) for longer than the allowable time (L6-03).
Cause		**Possible Solution**
Parameter settings are not appropriate for the load.		Check the settings of parameters L6-02 and L6-03.
Fault on the machine side (e.g., machine is locked up).		Check the status of the load. Remove the cause of the fault.
Digital Operator Display		**Fault Name**
oL4	oL4	Overtorque Detection 2 The current has exceeded the value set for Overtorque Detection 2 (L6-05) for longer than the allowable time (L6-06).
Cause		**Possible Solution**
Parameter settings are not appropriate for the load.		Check the settings of parameters L6-05 and L6-06.
Digital Operator Display		**Fault Name**
oL5	oL5	Mechanical Weakening Detection 1 Overtorque occurred, matching the conditions specified in L6-08.
Cause		**Possible Solution**
Overtorque triggered mechanical weakening detection level set to L6-08.		Check for the cause of mechanical weakening.

上正科技有限公司
購買、維修 此手冊零組件
電話： 037-466333
Email: service@repairtw.com
Line id: @2222
www.repairtw.com

Digital Operator Display		Fault Name
oL7	oL7	High Slip Braking oL
		The output frequency stayed constant for longer than the time set in n3-04 during High Slip Braking.
Cause		**Possible Solution**
Excessive load inertia. Motor is driven by the load. Something on the load side is restricting deceleration.		• Reduce deceleration times in parameters C1-02, C1-04, C1-06, and C1-08 for applications that do not use High Slip Braking. • Use a braking resistor to shorten deceleration time.
The overload time during High Slip Braking is too short.		• Increase parameter n3-04 (High-slip Braking Overload Time). • Install a thermal relay and increase the setting of n3-04 to the maximum value.
Digital Operator Display		**Fault Name**
oPr	oPr	External Digital Operator Connection Fault
		• The external operator has been disconnected from the drive. **Note:** An oPr fault will occur when all of the following conditions are true: • Output is interrupted when the operator is disconnected (o2-06 = 1). • The Run command is assigned to the operator (b1-02 = 0 and LOCAL has been selected).
Cause		**Possible Solution**
External operator is not properly connected to the drive.		• Check the connection between the operator and the drive. • Replace the cable if damaged. • Turn off the drive input power and disconnect the operator. Next reconnect the operator and turn the drive input power back on.
Digital Operator Display		**Fault Name**
oS	oS	Overspeed (for Control Mode with PG)
		The motor speed feedback exceeded the F1-08 setting.
Cause		**Possible Solution**
Overshoot is occurring.		• Increase the settings for C5-01 (Speed Control Proportional Gain 1) and reduce C5-02 (Speed Control Integral Time 1). • If using a Closed Loop Vector mode, enable Feed Forward and perform Inertia Auto-Tuning.
Incorrect speed feedback scaling if terminal RP is used as speed feedback input in V/f control.		• Set H6-02 to the value of the speed feedback signal frequency when the motor runs at the maximum speed. • Adjust the input signal using parameters H6-03 through H6-05.
Incorrect number of PG pulses has been set.		• Check and correct parameter F1-01.
Inappropriate parameter settings.		Check the setting for the overspeed detection level and the overspeed detection time (F1-08 and F1-09).
Digital Operator Display		**Fault Name**
ov	ov	Overvoltage
		Voltage in the DC bus has exceeded the overvoltage detection level. • For 200 V class: approximately 410 V • For 400 V class: approximately 820 V
Cause		**Possible Solution**
Deceleration time is too short and regenerative energy is flowing from the motor into the drive.		• Increase the deceleration time (C1-02, C1-04, C1-06, C1-08). • Install a dynamic braking option. • Enable stall prevention during deceleration (L3-04 = 1). Stall Prevention is enabled as the default setting.
Fast acceleration time causes the motor to overshoot the speed reference.		• Check if sudden drive acceleration triggers an overvoltage alarm. • Increase the acceleration time. • Use longer S-curve acceleration and deceleration times. • Enable the Overvoltage Suppression function (L3-11 = 1). • Lengthen the S-curve at acceleration end.
Excessive braking load.		The braking torque was too high, causing regenerative energy to charge the DC bus. Reduce the braking torque, use a dynamic braking option, or lengthen decel time.
Surge voltage entering from the drive input power.		Install a DC reactor. **Note:** Voltage surge can result from a thyristor convertor and phase advancing capacitor using the same input power supply.
Ground fault in the output circuit causing the DC bus capacitor to overcharge.		• Check the motor wiring for ground faults. • Correct grounding shorts and turn the power back on.
Improper Setting of Speed Search related parameters. (Includes Speed Search after a momentary power loss and after a fault restart.)		• Check the settings for Speed Search-related parameters. • Enable Speed Search restart function (b3-19 greater than or equal to 1 to 10). • Adjust the current level during Speed Search and the deceleration time (b3-02 and b3-03 respectively). • Perform Stationary Auto-Tuning for line-to-line resistance and then enable Speed Estimation Speed Search (b3-24 = 1).
Drive input power voltage is too high.		• Check the voltage. • Lower drive input power voltage within the limits listed in the specifications.
The braking transistor is wired incorrectly.		• Check braking transistor wiring for errors. • Properly rewire the braking resistor device.
PG cable is disconnected.		Reconnect the cable.
PG cable wiring is wrong.		Correct the wiring.
Noise interference along the PG encoder wiring.		Separate the wiring from the source of the noise (often the output lines from the drive).
Drive fails to operate properly due to noise interference.		• Review the list of possible solutions provided for controlling noise. • Review the section on handling noise interference and check the control circuit lines, main circuit lines, and ground wiring.
Load inertia has been set incorrectly.		• Check the load inertia settings when using KEB, overvoltage suppression, or Stall Prevention during deceleration. • Adjust the load inertia ratio in L3-25 to better match the load.
Braking function is being used in OLV/PM.		Connect a braking resistor.
Motor hunting occurs.		• Adjust the parameters that control hunting. • Set the gain for Hunting Prevention (n1-02). • Adjust the AFR time constant (n2-02 and n2-03). • Adjust the speed feedback detection suppression gain for PM motors (n8-45) and the time constant for pull-in current (n8-47).

上正科技有限公司
購買、維修、規格冊零組件
電話：037-466633
Email：service@sinjhairtw.com
Line ID：@zzzz
www.sinjhairtw.com

Digital Operator Display		Fault Name
PF	PF	Input Phase Loss
		Drive input power has an open phase or has a large imbalance of voltage between phases. Detected when L8-05 = 1 (enabled).
Cause		**Possible Solution**
There is phase loss in the drive input power.		• Check for wiring errors in the main circuit drive input power. • Correct the wiring.
There is loose wiring in the drive input power terminals.		• Ensure the terminals are tightened properly. • Apply the tightening torque as specified in this manual. *Refer to Wire Gauges and Tightening Torque on page 66*
There is excessive fluctuation in the drive input power voltage.		• Check the voltage from the drive input power. • Review the possible solutions for stabilizing the drive input power.
There is poor balance between voltage phases.		• Stabilize drive input power or disable phase loss detection.
The main circuit capacitors are worn.		• Check the maintenance time for the capacitors (U4-05). • Replace the capacitor if U4-05 is greater than 90%. For instructions on replacing the capacitor, contact Yaskawa or your nearest sales representative.
		Check for anything problems with the drive input power. If drive input power appears normal but the alarm continues to occur, replace either the control board or the entire drive. For instructions on replacing the control board, contact Yaskawa or your nearest sales representative.
Digital Operator Display		**Fault Name**
PGo	PGo	PG Disconnect (for any control modes using a PG option card)
		No PG pulses are received for longer than the time set to F1-14.
Cause		**Possible Solution**
PG cable is disconnected.		Reconnect the cable.
PG cable wiring is wrong.		Correct the wiring.
PG has no power.		Check the power line to the PG encoder.
PG encoder brake is clamped shut.		Ensure the motor brake releases properly.
Digital Operator Display		**Fault Name**
PGoH	PGoH	PG Hardware Fault (detected when using a PG-X3 option card)
		PG cable is not connected properly.
Cause		**Possible Solution**
PG cable is disconnected.		Reconnect the cable.
Digital Operator Display		**Fault Name**
rF	rF	Braking Resistor Fault
		The resistance of the braking resistor being used is too low.
Cause		**Possible Solution**
The proper braking resistor option has not been installed.		Select the braking resistor option so that fits to the drives braking transistor specification.
Regenerative converter, regenerative unit, or braking unit is being used.		Disable the braking transistor protection selection (set L8-55 to 1).
Digital Operator Display		**Fault Name**
rH	rH	Braking Resistor Overheat
		Braking resistor protection was triggered. Fault detection is enabled when L8-01 = 1 (disabled as a default).
Cause		**Possible Solution**
Deceleration time is too short and excessive regenerative energy is flowing back into the drive.		• Check the load, deceleration time, and speed. • Reduce the load inertia. • Increase the deceleration times (C1-02, C1-04, C1-06, C1-08, C1-09). • Replace the dynamic braking option with a larger device that can handle the power that is discharged.
Excessive braking inertia.		Recalculate braking load and braking power. Reduce the braking load by adjusting braking resistor settings.
The braking operation duty cycle is too high.		Check the braking operation duty cycle. Braking resistor protection for ERF-type braking resistors (L8-01 = 1) allows a braking duty cycle of maximum 3%.
The proper braking resistor has not been installed.		• Check the specifications and conditions for the braking resistor device. • Select the optimal braking resistor.
Note: The magnitude of the braking load trips the braking resistor overheat alarm, NOT the surface temperature. Using the braking resistor more frequently than it is rated for trips the alarm even when the braking resistor surface is not very hot.		
Digital Operator Display		**Fault Name**
rr	rr	Dynamic Braking Transistor
		The built-in dynamic braking transistor failed.
Cause		**Possible Solution**
The braking transistor is damaged.		• Cycle power to the drive and check if the fault reoccurs. *Refer to Diagnosing and Resetting Faults on page 334*. • Replace either the control board or the entire drive. For instructions on replacing the control board, contact Yaskawa or your nearest sales representative.
The control circuit is damaged.		
Digital Operator Display		**Fault Name**
SEr	SEr	Too Many Speed Search Restarts
		The number of Speed Search restarts exceeded the number set to b3-19.
Cause		**Possible Solution**
Speed Search parameters are set to the wrong values.		• Reduce the detection compensation gain during Speed Search (b3-10). • Increase the current level when attempting Speed Search (b3-17). • Increase the detection time during Speed Search (b3-18). • Repeat Auto-Tuning.
The motor is coasting in the opposite direction of the Run command.		Enable Bi-Directional Speed Search (b3-14 = 1).

上正科技有限公司
購買、維修 此手冊零組件
電話： 037-466333
Email: service@repairtw.com
Line id: @zzzz
www.repairtw.com

Digital Operator Display		Fault Name
STo	STo	Motor Pull Out or Step Out Detection
		Motor pull out or step out has occurred. Motor has exceeded its pull-out torque.
Cause		**Possible Solution**
The wrong motor code is set (Yaskawa motors only).		• Enter the correct motor code for the PM being used into E5-01. • For special-purpose motors, enter the correct data to all E5 parameters according to the test report provided for the motor.
Load is too heavy.		• Increase the load inertia for PM motor (n8-55). • Increase the pull-in current during accel/decel (n8-51). • Reduce the load. • Increase the motor or drive capacity.
Load inertia is too heavy.		Increase the load inertia for PM motor (n8-55).
Acceleration and deceleration times are too short.		• Increase the acceleration and deceleration times (C1-01 through C1-08). • Increase the S-curve acceleration and deceleration times (C2-01).
Speed response is too slow.		Increase the load inertia for PM motor (n8-55).
Digital Operator Display		**Fault Name**
SvE	SvE	Zero Servo Fault
		Position deviation during zero servo.
Cause		**Possible Solution**
Torque limit is set too low.		Set the torque limit to an appropriate value using parameters L7-01 to L7-04.
Excessive load torque.		Reduce the amount of load torque.
Noise interference along PG encoder wiring.		Check the PG signal for noise interference.
Digital Operator Display		**Fault Name**
UL3	UL3	Undertorque Detection 1
		The current has fallen below the minimum value set for torque detection (L6-02) for longer than the allowable time (L6-03).
Cause		**Possible Solution**
Parameter settings are not appropriate for the load.		Check the settings of parameters L6-02 and L6-03.
There is a fault on the machine side.		Check the load for any problems.
Digital Operator Display		**Fault Name**
UL4	UL4	Undertorque Detection 2
		The current has fallen below the minimum value set for torque detection (L6-05) for longer than the allowable time (L6-06).
Cause		**Possible Solution**
Parameter settings are not appropriate for the load.		Check the settings of parameters L6-05 and L6-06.
There is a fault on the machine side.		Check the load for any problems.
Digital Operator Display		**Fault Name**
UL5	UL5	Mechanical Weakening Detection 2
		The operation conditions matched the conditions set to L6-08.
Cause		**Possible Solution**
Undertorque was detected and matched the conditions for mechanical loss detection set to L6-08.		Check the load side for any problems.
Digital Operator Display		**Fault Name**
Uv1	Uv1	DC Bus Undervoltage
		One of the following conditions occurred while the drive was stopped: • Voltage in the DC bus fell below the undervoltage detection level (L2-05) • For 200 V class: approximately 190 V • For 400 V class: approximately 380 V (350 V when E1-01 is less than 400) The fault is output only if L2-01 = 0 or L2-01 = 1 and the DC bus voltage has fallen below the level set to L2-05 for longer than the time set to L2-02.
Cause		**Possible Solution**
Input power phase loss.		• The main circuit drive input power is wired incorrectly. • Correct the wiring.
One of the drive input power wiring terminals is loose.		• Ensure there are no loose terminals. • Apply the tightening torque specified in this manual to fasten the terminals. ***Refer to Wire Gauges and Tightening Torque on page 66***
There is a problem with the voltage from the drive input power.		• Check the voltage. • Correct the voltage to be within the range listed in drive input power specifications. • If there is no problem with the power supply to the main circuit, check for problems with the main circuit magnetic contactor.
The power has been interrupted.		Correct the drive input power.
The main circuit capacitors are worn.		• Check the maintenance time for the capacitors (U4-05). • Replace either the control board or the entire drive if U4-05 exceeds 90%. For instructions on replacing the control board, contact Yaskawa or your nearest sales representative.
The relay or contactor on the soft-charge bypass circuit is damaged.		• Cycle power to the drive and see if the fault reoccurs. • If the problem continues, replace either the control board or the entire drive. For instructions on replacing the control board, contact Yaskawa or your nearest sales representative. • Check monitor U4-06 for the performance life of the soft-charge bypass. • Replace either the control board or the entire drive if U4-06 exceeds 90%. For instructions on replacing the control board, contact Yaskawa or your nearest sales representative.

上正科技有限公司
購買、維修 此手冊零組件
電話： 037-466333
Email: service@repairtw.com
Line id: @zzzz
www.repairtw.com

Digital Operator Display		Fault Name
Uv2	Uv2	Control Power Supply Voltage Fault
		Voltage is too low for the control drive input power.
Cause		**Possible Solution**
For models CIMR-A□2A0004 through 2A0056 and CIMR-A□4A0002 through 4A0031: L2-02 was changed from its default value without installing a Momentary Power Loss Ride-Thru unit.		Correct the setting to L2-02 or install an optional Momentary Power Loss Ride-Thru unit.
Control power supply wiring is damaged.		• Cycle power to the drive. Check if the fault reoccurs. • If the problem continues, replace the control board, the entire drive, or the control power supply.
Internal circuitry is damaged.		• Cycle power to the drive. Check if the fault reoccurs. • If the problem continues, replace either the control board or the entire drive. For instructions on replacing the control board, contact Yaskawa or your nearest sales representative.
Digital Operator Display		**Fault Name**
Uv3	Uv3	Undervoltage 3 (Soft-Charge Bypass Circuit Fault)
		The soft-charge bypass circuit has failed.
Cause		**Possible Solution**
The relay or contactor on the soft-charge bypass circuit is damaged.		• Cycle power to the drive and see if the fault reoccurs. • If the problem continues, replace either the control board or the entire drive. For instructions on replacing the control board, contact Yaskawa or your nearest sales representative. • Check monitor U4-06 for the performance life of the soft-charge bypass. • Replace either the control board or the entire drive if U4-06 exceeds 90%. For instructions on replacing the control board, contact Yaskawa or your nearest sales representative.
Digital Operator Display		**Fault Name**
voF	voF	Output Voltage Detection Fault
		Problem detected with the voltage on the output side of the drive.
Cause		**Possible Solution**
Hardware is damaged.		Replace either the control board or the entire drive. For instructions on replacing the control board, contact Yaskawa or your nearest sales representative.

<1> Displayed as CPF00 or CPF20 when occurring at drive power up. When one of the faults occurs after successfully starting the drive, the display will show CPF01 or CPF21.

上正科技有限公司
購買、維修 此手冊零組件
電話： 037-466333
Email: service@repairtw.com
Line id: @zzzz
www.repairtw.com

6.5 Alarm Detection

◆ Alarm Codes, Causes, and Possible Solutions

Alarms are drive protection functions that do not necessarily cause the drive to stop. Once the cause of an alarm is removed, the drive will return to the same status is was before the alarm occurred.

When an alarm has been triggered, the ALM light on the digital operator display blinks and the alarm code display flashes. If a multi-function output is set for an alarm (H2-□□ = 10), that output terminal will be triggered.

Note: If a multi-function output is set to close when an alarm occurs (H2-□□ = 10), it will also close when maintenance periods are reached, triggering alarms LT-1 through LT-4 (triggered only if H2-□□ = 2F).

Table 6.16 Alarm Codes, Causes, and Possible Solutions

Digital Operator Display		Minor Fault Name
AEr	AEr	Communication Option Station Number Setting Error (CC-Link, CANopen, MECHATROLINK-II)
		Option card node address is outside the acceptable setting range.
Cause		**Possible Solutions**
Station number is set outside the possible setting range.		• Set parameter F6-10 to the proper value if a CC-Link option card is used. • Set parameter F6-35 to the proper value if a CANopen option card is used.
Digital Operator Display		**Minor Fault Name**
bb	bb	Baseblock
		Drive output interrupted as indicated by an external baseblock signal.
Cause		**Possible Solutions**
External baseblock signal was entered via one of the multi-function input terminals (S1 to S8).		Check external sequence and baseblock signal input timing.
Digital Operator Display		**Minor Fault Name**
boL	boL	Braking Transistor Overload Fault
		The braking transistor in the drive has been overloaded.
Cause		**Possible Solutions**
The proper braking resistor has not been installed.		Select the optimal braking resistor.
Digital Operator Display		**Minor Fault Name**
bUS	bUS	Option Communication Error
		• After initial communication was established, the connection was lost. • Assign a Run command frequency reference to the option card.
Cause		**Possible Solutions**
Connection is broken or master controller stopped communicating.		• Check for faulty wiring. • Correct the wiring. • Check for disconnected cables and short circuits. Repair as needed.
Option card is damaged.		If there are no problems with the wiring and the fault continues to occur, replace the option card.
The option card is not properly connected to the drive.		• The connector pins on the option card are not properly lined up with the connector pins on the drive. • Reinstall the option card.
A data error occurred due to noise.		• Check options available to minimize the effects of noise. • Take steps to counteract noise in the control circuit wiring, main circuit lines and ground wiring. • Try to reduce noise on the controller side. • Use surge absorbers on magnetic contactors or other equipment causing the disturbance. • Use recommended cables or some other type of shielded line. Ground the shield to the controller side or on the input power side. • All wiring for comm. devices should be separated from drive input power lines. Install an EMC noise filter to the drive input power.
Digital Operator Display		**Minor Fault Name**
CALL	CALL	Serial Communication Transmission Error
		Communication has not yet been established.
Cause		**Possible Solutions**
Communications wiring is faulty, there is a short circuit, or something is not connected properly.		• Check for wiring errors. • Correct the wiring. • Check for disconnected cables and short circuits. Repair as needed.
Programming error on the master side.		Check communications at start-up and correct programming errors.
Communications circuitry is damaged.		• Perform a self-diagnostics check. • If the problem continues, replace either the control board or the entire drive. For instructions on replacing the control board, contact Yaskawa or your nearest sales representative.
Termination resistor setting is incorrect.		A termination resistor must be installed at both ends of a communication line. Slave drives must have the internal termination resistor switch set correctly. Place DIP switch S2 to the ON position.

上正科技有限公司
購買、維修 此手冊零組件
電話： 037-466333
Email: service@repairtw.com
Line id: @zzzz
www.repairtw.com

Digital Operator Display		Minor Fault Name
CE	CE	MEMOBUS/Modbus Communication Error
		Control data was not received correctly for two seconds.
Cause		**Possible Solutions**
A data error occurred due to noise.		• Check options available to minimize the effects of noise. • Take steps to counteract noise in the control circuit wiring, main circuit lines, and ground wiring. • Reduce noise on the controller side. • Use surge absorbers for the magnetic contactors or other components that may be causing the disturbance. • Use only recommended shielded line. Ground the shield on the controller side or on the drive input power side. • Separate all wiring for comm. devices from drive input power lines. Install an EMC noise filter to the drive input power supply.
Communication protocol is incompatible.		• Check the H5 parameter settings as well as the protocol setting in the controller. • Ensure settings are compatible.
The CE detection time (H5-09) is set shorter than the time required for a communication cycle to take place.		• Check the PLC. • Change the software settings in the PLC. • Set a longer CE detection time (H5-09).
Incompatible PLC software settings or there is a hardware problem.		• Check the PLC. • Remove the cause of the error on the controller side.
Communications cable is disconnected or damaged.		• Check the connector to make sure the cable has a signal. • Replace the communications cable.
Digital Operator Display		**Minor Fault Name**
CrST	CrST	Cannot Reset
Cause		**Possible Solutions**
A fault reset command was entered while the Run command was still present.		• Ensure that a Run command cannot be entered from the external terminals or option card during fault reset. • Turn off the Run command.
Digital Operator Display		**Minor Fault Name**
dEv	dEv	Speed Deviation (when using a PG option card)
		The deviation between the speed reference and speed feedback is greater than the setting in F1-10 for longer than the time in F1-11.
Cause		**Possible Solutions**
Load is too heavy		Reduce the load.
Acceleration and deceleration times are set too short.		Increase the acceleration and deceleration times (C1-01 through C1-08).
The load is locked up.		Check the machine.
Parameter settings are inappropriate.		Check the settings of parameters F1-10 and F1-11.
Incorrect speed feedback scaling if terminal RP is used as speed feedback input in V/f Control.		• Set H6-02 to value of the speed feedback signal frequency when the motor runs at the maximum speed. • Adjust the speed feedback signal using parameters H6-03 through H6-05. • Make sure the speed feedback signal frequency does not exceed he maximum input frequency of terminal RP.
The motor brake engaged.		Ensure the brake releases properly.
Digital Operator Display		**Minor Fault Name**
dnE	dnE	Drive Disabled
Cause		**Possible Solutions**
"Drive Enable" is set to a multi-function contact input (H1-□□ = 6A) and that signal was switched off.		Check the operation sequence.
Digital Operator Display		**Minor Fault Name**
EF	EF	Forward/Reverse Run Command Input Error
		Both forward run and reverse run closed simultaneously for over 0.5 s.
Cause		**Possible Solutions**
Sequence error		Check the forward and reverse command sequence and correct the problem. **Note:** When minor fault EF detected, motor ramps to stop.
Digital Operator Display		**Minor Fault Name**
EF0	EF0	Option Card External Fault
		An external fault condition is present.
Cause		**Possible Solutions**
An external fault was received from the PLC with F6-03 = 3 (causing the drive to continue running when an external fault occurs).		• Remove the cause of the external fault. • Remove the external fault input from the PLC.
There is a problem with the PLC program.		Check the PLC program and correct problems.
Digital Operator Display		**Minor Fault Name**
EF1	EF1	External fault (input terminal S1)
		External fault at multi-function input terminal S1.
EF2	EF2	External fault (input terminal S2)
		External fault at multi-function input terminal S2.
EF3	EF3	External fault (input terminal S3)
		External fault at multi-function input terminal S3.
EF4	EF4	External fault (input terminal S4)
		External fault at multi-function input terminal S4.
EF5	EF5	External fault (input terminal S5)
		External fault at multi-function input terminal S5.
EF6	EF6	External fault (input terminal S6)
		External fault at multi-function input terminal S6.

广平科技有限公司
維修、維修、維修、維修
電話：037-466333
Email: service@repairtw.com
Line id: @zzzz
www.repairtw.com

EF7	EF7	External fault (input terminal S7)
		External fault at multi-function input terminal S7.
EF8	EF8	External fault (input terminal S8)
		External fault at multi-function input terminal S8.
Cause		**Possible Solutions**
An external device has tripped an alarm function.		Remove the cause of the external fault and reset the multi-function input value.
Wiring is incorrect.		• Ensure the signal lines have been connected properly to the terminals assigned for external fault detection (H1-□□ = 20 to 2F). • Reconnect the signal line.
Multi-function contact inputs are set incorrectly.		• Check if the unused terminals have been set for H1-□□ = 20 to 2F (External Fault). • Change the terminal settings.
Digital Operator Display		**Minor Fault Name**
FbH	FbH	Excessive PID Feedback
		The PID feedback input is higher than the level set in b5-36 for longer than the time set in b5-37, and b5-12 is set to 1 or 4.
Cause		**Possible Solutions**
Parameters settings for b5-36 and b5-37 are incorrect.		Check parameters b5-36 and b5-37.
PID feedback wiring is faulty.		Correct the wiring.
Feedback sensor has malfunctioned.		Check the sensor and replace it if damaged.
Feedback input circuit is damaged.		Replace either the control board or the entire drive. For instructions on replacing the control board, contact Yaskawa or your nearest sales representative.
Digital Operator Display		**Minor Fault Name**
FbL	FbL	PID Feedback Loss
		The PID feedback input is lower than the level set in b5-13 for longer than the time set in b5-14, and b5-12 is set to 1 or 4.
Cause		**Possible Solutions**
Parameters settings for b5-13 and b5-14 are incorrect.		Check parameters b5-13 and b5-14.
PID feedback wiring is faulty.		Correct the wiring.
Feedback sensor has malfunctioned.		Check the sensor and replace it if damaged.
Feedback input circuit is damaged.		Replace either the control board or the entire drive. For instructions on replacing the control board, contact Yaskawa or your nearest sales representative.
Digital Operator Display		**Minor Fault Name**
Hbb	Hbb	Safe Disable Signal Input
		Both Safe Disable Input channels are open.
Cause		**Possible Solutions**
Both Safe Disable Inputs H1 and H2 are open.		• Check signal status at the input terminals H1 and H2. • Check the Sink/Source Selection for the digital inputs. • If the Safe Disable function is not utilized, check if the terminals H1-HC, and H2-HC are linked.
Internally, both Safe Disable channels are broken.		Replace either the control board or the entire drive. For instructions on replacing the control board, contact Yaskawa or your nearest sales representative.
Digital Operator Display		**Minor Fault Name**
HbbF	HbbF	Safe Disable Signal Input
		One Safe Disable channel is open while the other one is closed.
Cause		**Possible Solutions**
The signals to the Safe Disable inputs are wrong or the wiring is incorrect.		Check signal status at the input terminals H1 and H2. If the Safe Disable function is not utilized, the terminals H1-HC, and H2-HC must be linked.
One of the Safe Disable channels is faulty.		Replace either the control board or the entire drive. For instructions on replacing the control board, contact Yaskawa or your nearest sales representative.
Digital Operator Display		**Minor Fault Name**
HCA	HCA	Current Alarm
		Drive current exceeded overcurrent warning level (150% of the rated current).
Cause		**Possible Solutions**
Load is too heavy.		Either reduce the load for applications with repetitive operation (repetitive stops and starts, etc.), or replace the drive.
Acceleration and deceleration times are too short.		• Calculate the torque required during acceleration and for the inertia moment. • If the torque level is not right for the load, take the following steps: • Increase the acceleration and deceleration times (C1-01 through C1-08). • Increase the capacity of the drive.
A special-purpose motor is being used, or the drive is attempting to run a motor greater than the maximum allowable capacity.		• Check the motor capacity. • Use a motor appropriate for the drive. Ensure the motor is within the allowable capacity range.
The current level increased due to Speed Search after a momentary power loss or while attempting to perform a fault restart.		The alarm will appear only briefly. There is no need to take action to prevent the alarm from occurring in such instances.
Digital Operator Display		**Minor Fault Name**
LT-1	LT-1	Cooling Fan Maintenance Time
		The cooling fan has reached its expected maintenance period and may need to be replaced. **Note:** An alarm output (H2-□□ = 10) will only be triggered if H2-□□ = 2F.
Cause		**Possible Solutions**
The cooling fan has reached 90% of its expected performance life.		Replace the cooling fan and reset the Maintenance Monitor by setting o4-03 to 0.

上正科技有限公司
購買、維修 此手冊零組件
電話： 037-466333
Email: service@repairtw.com
Line id: @zzzz
www.repairtw.com

Digital Operator Display		Minor Fault Name
LT-2	LT-2	Capacitor Maintenance Time
		The main circuit and control circuit capacitors are nearing the end of their expected performance life. **Note:** An alarm output (H2-□□ = 10) will only be triggered if H2-□□ = 2F.
Cause		**Possible Solutions**
The main circuit and control circuit capacitors have reached 90% of their expected performance life.		Replace either the control board or the entire drive. For instructions on replacing the control board, contact Yaskawa or your nearest sales representative.
Digital Operator Display		**Minor Fault Name**
LT-3	LT-3	Soft Charge Bypass Relay Maintenance Time
		The DC bus soft charge relay is nearing the end of its expected performance life. **Note:** An alarm output (H2-□□ = 10) will only be triggered if H2-□□ = 2F.
Cause		**Possible Solutions**
The DC bus soft charge relay has reached 90% of their expected performance life.		Replace either the control board or the entire drive. For instructions on replacing the control board, contact Yaskawa or your nearest sales representative.
Digital Operator Display		**Minor Fault Name**
LT-4	LT-4	IGBT Maintenance Time (50%)
		IGBTs have reached 50% of their expected performance life. **Note:** An alarm output (H2-□□ = 10) will only be triggered if H2-□□ = 2F.
Cause		**Possible Solutions**
IGBTs have reached 50% of their expected performance life.		Check the load, carrier frequency, and output frequency.
Digital Operator Display		**Minor Fault Name**
oH	oH	Heatsink Overheat
		The temperature of the heatsink exceeded the overheat pre-alarm level set to L8-02 (90-100°C). Default value for L8-02 is determined by drive capacity (o2-04).
Cause		**Possible Solutions**
Surrounding temperature is too high		• Check the surrounding temperature. • Improve the air circulation within the enclosure panel. • Install a fan or air conditioner to cool surrounding area. • Remove anything near drive that may cause extra heat.
Internal cooling fan has stopped.		• Replace the cooling fan. ***Refer to Cooling Fan Component Names on page 352***. • After replacing the drive, reset the cooling fan maintenance parameter to (o4-03 = "0").
Airflow around the drive is restricted.		• Provide proper installation space around the drive as indicated in the manual. ***Refer to Installation Orientation and Spacing on page 40***. • Allow for the specified space and ensure that there is sufficient circulation around the control panel.
		• Check for dust or foreign materials clogging cooling fan. • Clear debris caught in the fan that restricts air circulation.
Digital Operator Display		**Minor Fault Name**
oH2	oH2	Drive Overheat Warning
		"Drive Overheat Warning" was input to a multi-function input terminal, S1 through S8 (H1-□□= B)
Cause		**Possible Solutions**
An external device triggered an overheat warning in the drive.		• Search for the device that tripped the overheat warning. • Solving the problem will clear the warning.
Digital Operator Display		**Minor Fault Name**
oH3	oH3	Motor Overheat
		The motor overheat signal entered to a multi-function analog input terminal exceeded the alarm level (H3-02, H3-06 or H3-10 = E).
Cause		**Possible Solutions**
Motor thermostat wiring is fault (PTC input).		Repair the PTC input wiring.
There is a fault on the machine side (e.g., the machine is locked up).		• Check the status of the machine. • Remove the cause of the fault.
Motor has overheated.		• Check the load size, accel/decel times, and cycle times. • Decrease the load. • Increase accel and decel times (C1-01 to C1-08). • Adjust the preset V/f pattern (E1-04 through E1-10). This will mainly involve reducing E1-08 and E1-10. **Note:** Do not lower E1-08 and E1-10 excessively, because this reduces load tolerance at low speeds. • Check the motor-rated current. • Enter motor-rated current on motor nameplate (E2-01). • Ensure the motor cooling system is operating normally. • Repair or replace the motor cooling system.
Digital Operator Display		**Minor Fault Name**
oL3	oL3	Overtorque 1
		Drive output current (or torque in OLV, CLV, AOLV/PM, CLV/PM) was greater than L6-02 for longer than the time set in L6-03.
Cause		**Possible Solutions**
Inappropriate parameter settings.		Check parameters L6-02 and L6-03.
There is a fault on the machine side (e.g., the machine is locked up).		• Check the status of the machine. • Remove the cause of the fault.
Digital Operator Display		**Minor Fault Name**
oL4	oL4	Overtorque 2
		Drive output current (or torque in OLV, CLV, AOLV/PM, CLV/PM) was greater than L6-05 for longer than the time set in L6-06.
Cause		**Possible Solutions**
Parameter settings are not appropriate.		Check parameters L6-05 and L6-06.
There is a fault on the machine side (e.g., the machine is locked up).		• Check the status of the machine being used. • Remove the cause of the fault.

上傳科技有限公司
購買、維修 此手冊零組件
電話：(02) 45633
Email: service@repairtw.com
Line id: @zzzz
www.repairtw.com

Digital Operator Display		Minor Fault Name
oL5	oL5	Mechanical Weakening Detection 1
		Overtorque occurred, matching the conditions specified in L6-08.
Cause		**Possible Solutions**
Overtorque occurred, triggering the mechanical weakening level set to L6-08.		• Check for the cause of mechanical weakening.
Digital Operator Display		**Minor Fault Name**
oS	oS	Overspeed (for Control Mode with PG)
		The motor speed feedback exceeded the F1-08 setting.
Cause		**Possible Solutions**
Overshoot is occurring.		• Increase the settings for C5-01 (Speed Control Proportional Gain 1) and reduce C5-02 (Speed Control Integral Time 1). • If using a Closed Loop Vector mode enable Feed Forward Control and perform Inertia Auto-Tuning.
Incorrect speed feedback scaling if terminal RP is used as speed feedback input in V/f control		• Set H6-02 to value of the speed feedback signal frequency when the motor runs at the maximum speed. • Adjust the input signal using parameters H6-03 through H6-05.
Incorrect PG pulse number has been set		• Check and correct parameter F1-01.
Inappropriate parameter settings.		Check the setting for the overspeed detection level and the overspeed detection time (F1-08 and F1-09).
Digital Operator Display		**Minor Fault Name**
ov	ov	DC Bus Overvoltage
		The DC bus voltage exceeded the trip point. For 200 V class: approximately 410 V For 400 V class: approximately 820 V
Cause		**Possible Solutions**
Surge voltage present in the drive input power.		• Install a DC reactor or an AC reactor. • Voltage surge can result from a thyristor convertor and a phase advancing capacitor operating on the same drive input power system.
The motor is short-circuited.		• Check the motor power cable, relay terminals and motor terminal box for short circuits. • Correct grounding shorts and turn the power back on.
Ground current has over-charged the main circuit capacitors via the drive input power.		
Noise interference causes the drive to operate incorrectly.		• Review possible solutions for handling noise interference. • Review section on handling noise interference and check control circuit lines, main circuit lines and ground wiring. • If the magnetic contactor is identified as a source of noise, install a surge protector to the MC coil.
		Set number of fault restarts (L5-01) to a value other than 0.
PG cable is disconnected.		Reconnect the cable.
PG cable wiring is wrong.		Correct the wiring.
Noise interference along PG encoder wiring.		Separate PG wiring from the source of the noise (often output wiring from the drive).
Digital Operator Display		**Minor Fault Name**
PASS	PASS	MEMOBUS/Modbus Comm. Test Mode Complete
Cause		**Possible Solutions**
MEMOBUS/Modbus test has finished normally.		This verifies that the test was successful.
Digital Operator Display		**Minor Fault Name**
PGo	PGo	PG Disconnect (for Control Mode with PG)
		Detected when no PG pulses are received for a time longer than setting in F1-14.
Cause		**Possible Solutions**
PG cable is disconnected.		Reconnect the cable.
PG cable wiring is wrong.		Correct the wiring.
PG encoder does not have enough power.		Make sure the correct power supply is properly connected to the PG encoder.
Brake is holding the PG.		Ensure the brake releases properly
Digital Operator Display		**Minor Fault Name**
PGoH	PGoH	PG Hardware Fault (detected when using a PG-X3 option card)
		PG cable has become disconnected.
Cause		**Possible Solutions**
PG cable is disconnected.		Reconnect the cable.
Digital Operator Display		**Minor Fault Name**
rUn	rUn	Motor Switch during Run
		A command to switch motors was entered during run.
Cause		**Possible Solutions**
A motor switch command was entered during run.		Change the operation pattern so that the motor switch command is entered while the drive is stopped.
Digital Operator Display		**Minor Fault Name**
SE	SE	MEMOBUS/Modbus Communication Test Mode Error **Note:** This alarm will not trigger a multi-function output terminal that is set for alarm output (H2-□□ = 10).
Cause		**Possible Solutions**
A digital input set to 67H (MEMOBUS/Modbus test) was closed while the drive was running.		Stop the drive and run the test again.
Digital Operator Display		**Minor Fault Name**
TrPC	TrPC	IGBT Maintenance Time (90%)
		IGBTs have reached 90% of their expected performance life.
Cause		**Possible Solutions**
IGBTs have reached 90% of their expected performance life.		Replace the drive.

[illegible]購買、維修 此手冊零組件
電話： 037-466333
Email: service@repairtw.com
Line id: @2222
www.repairtw.com

Digital Operator Display		Minor Fault Name
UL3	UL3	Undertorque Detection 1
		Drive output current (or torque in OLV, CLV, AOLV/PM, CLV/PM) less than L6-02 for longer than L6-03 time.
Cause		**Possible Solutions**
Inappropriate parameter settings.		Check parameters L6-02 and L6-03.
Load has dropped or decreased significantly.		Check for broken parts in the transmission system.
Digital Operator Display		**Minor Fault Name**
UL4	UL4	Undertorque Detection 2
		Drive output current (or torque in OLV, CLV, AOLV/PM, CLV/PM) less than L6-05 for longer than L6-06 time.
Cause		**Possible Solutions**
Inappropriate parameter settings.		Check parameters L6-05 and L6-06.
The load has dropped or decreased significantly.		Check for broken parts in the transmission system.
Digital Operator Display		**Minor Fault Name**
Uv	Uv	Undervoltage
		One of the following conditions was true when the drive was stopped and a Run command was entered: • DC bus voltage dropped below the level specified in L2-05. • Contactor to suppress inrush current in the drive was opened. • Low voltage in the control drive input power. This alarm outputs only if L2-01 is not 0 and DC bus voltage is under L2-05.
Cause		**Possible Solutions**
Phase loss in the drive input power.		Check for wiring errors in the main circuit drive input power. Correct the wiring.
Loose wiring in the drive input power terminals.		• Ensure the terminals have been properly tightened. • Apply the tightening torque to the terminals as specified. *Refer to Wire Gauges and Tightening Torque on page 66*
There is a problem with the drive input power voltage.		• Check the voltage. • Lower the voltage of the drive input power so that it is within the limits listed in the specifications.
Drive internal circuitry is worn.		• Check the maintenance time for the capacitors (U4-05). • Replace either the control board or the entire drive if U4-05 exceeds 90%. For instructions on replacing the control board, contact Yaskawa or your nearest sales representative.
The drive input power transformer is too small and voltage drops when the power is switched on.		• Check for an alarm when the magnetic contactor, line breaker, and leakage breaker are closed. • Check the capacity of the drive input power transformer.
Air inside the drive is too hot.		• Check the temperature inside the drive.
The CHARGE light is broken or disconnected.		Replace either the control board or the entire drive. For instructions on replacing the control board, contact Yaskawa or your nearest sales representative.
Digital Operator Display		**Minor Fault Name**
voF	voF	Output Voltage Detection Fault
		There is a problem with the output voltage.
Cause		**Possible Solutions**
Hardware is damaged.		Replace either the control board or the entire drive. For instructions on replacing the control board, contact Yaskawa or your nearest sales representative.

正科技有限公司
購買、維修 此手冊零組件
電話： 037-466333
Email: service@repairtw.com
Line id: @zzzz
www.repairtw.com

6.6 Operator Programming Errors

◆ oPE Codes, Causes, and Possible Solutions

An Operator Programming Error (oPE) occurs when a contradictory parameter is set or an individual parameter is set to an inappropriate value.

The drive will not operate until the parameter or parameters causing the problem are set correctly. An oPE, however, does not trigger an alarm or fault output. If an oPE occurs, investigate the cause and *Refer to oPE Codes, Causes, and Possible Solutions on page 325* for the appropriate action. When an oPE appears on the operator display, press the ENTER button to view U1-18 and see the parameter that is causing the oPE error (U1-18).

Table 6.17 oPE Codes, Causes, and Possible Solutions

Digital Operator Display		Error Name
oPE01	oPE01	Drive Capacity Setting Fault Drive capacity and the value set to o2-04 do not match.
Cause		**Possible Solutions**
The drive model selection (o2-04) and the actual capacity of the drive are not the same.		Correct the value set to o2-04.
Digital Operator Display		**Error Name**
oPE02	oPE02	Parameter Range Setting Error Use U1-18 to find parameters set outside the range.
Cause		**Possible Solutions**
Parameters were set outside the possible setting range.		Set parameters to the proper values.
Note: When multiple errors occur at the same time, other errors are given precedence over oPE02.		
Digital Operator Display		**Error Name**
oPE03	oPE03	Multi-Function Input Selection Error A contradictory setting is assigned to multi-function contact inputs H1-01 to H1-08.
Cause		**Possible Solutions**
• The same function is assigned to two multi-function inputs. • Excludes "Not used" and "External Fault."		• Ensure all multi-function inputs are assigned to different functions. • Re-enter the multi-function settings to ensure this does not occur.
The Up command was set but the Down command was not, or vice versa (settings 10 vs. 11). The Up 2 command was set but the Down 2 command was not, or vice versa (settings 75 vs. 76).		Correctly set functions that need to be enabled in combination with other functions.
• Run/Stop command for a 2-wire sequence was set (H1-□□ = 42), but Forward/Reverse command (H1-□□ = 43) was not. • "Drive Enable" is set to multi-function input S1 or S2 (H1-01 = 6A or H1-02 = 6A).		Correctly set functions that need to be enabled in combination with other functions.
• Two of the following functions are set at the same time: • Up/Down Command (10 vs. 11) • Up 2/Down 2 Command (75 vs. 76) • Hold Accel/Decel Stop (A) • Analog Frequency Reference Sample/Hold (1E) • Offset Frequency 1, 2, 3 Calculations (44, 45, 46)		• Check if contradictory settings have been assigned to the multi-function input terminals at the same time. • Correct setting errors.
The Up/Down command (10, 11) is enabled at the same time as PID control (b5-01).		Disable control PID (b5-01 = 0) or disable the Up/Down command.
Settings for N.C. and N.O. input for the following functions were selected at the same time: • External Search Command 1 and External Search Command 2 (61 vs. 62) • Fast Stop N.O. and Fast Stop N.C. (15 vs. 17) • KEB for Momentary Power Loss and High Slip Braking (65, 66, 7A, 7B vs. 68) • Motor Switch Command and Accel/Decel Time 2 (16 vs. 1A) • KEB Command 1 and KEB Command 2 (65, 66 vs. 7A, 7B) • FWD Run Command (or REV) and FWD/REV Run Command (2-wire) (40, 41 vs. 42, 43) • External DB Command and Drive Enable (60 vs. 6A) • Motor Switch Command and Up 2/Down 2 Command (16 vs. 75, 76)		Check for contradictory settings assigned to the multi-function input terminals at the same time. Correct setting errors.
One of the following settings was entered while H1-□□ = 2 (External Reference 1/2): • b1-15 = 4 (Pulse Train Input) but the pulse train input selection is not set for the frequency reference (H6-01 > 0) • b1-15 or b1-16 set to 3 but no option card is connected • Although b1-15 = 1 (Analog Input) and H3-02 or H3-10 are set to 0 (Frequency Bias)		Correct the settings for the multi-function input terminal parameters.
H2-□□ = 38 (Drive Enabled) but H1-□□ is not set to 6A (Drive Enable).		
H1-□□ = 7E (Direction Detection) although H6-01 is not set to 3 (for V/f Control with PG using terminal RP as speed feedback input).		
Digital Operator Display		**Error Name**
oPE04	oPE04	Initialization required.
Cause		**Possible Solutions**
The drive, control board, or terminal board has been replaced and the parameter settings between the control board and the terminal board no longer match.		To load the parameter settings to the drive that are stored in the terminal board, set A1-03 to 5550. Initialize parameters after drive replacement by setting A1-03 to 1110 or 2220.

上正科技有限公司
購買、維修 此手冊零組件
電話： 037-466333
Email: service@repairtw.com
Line Id: @zzzz
www.repairtw.com

Digital Operator Display		Error Name
oPE05	oPE05	Run Command/Frequency Reference Source Selection Error
Cause		**Possible Solutions**
Frequency reference is assigned to an option card (b1-01 = 3) but an input option card is not connected to the drive.		Reconnect the input option card to the drive.
The Run command is assigned to an option card (b1-02 = 3) but an input option card is not connected to the drive.		
Frequency reference is assigned to the pulse train input (b1-01 = 4), but terminal RP is not set for frequency reference input (H6-01 > 0)		Set H6-01 to "0".
Although the digital card input is set for BCD special for a 5 digit input (F3-01 = 6), the data length is set for 8 bit or 12 bit (F3-03 = 0, 1).		Set the input data for 16 bit (F3-03 = 2).
The following values have been set while an AI-A3 option card is installed: • The source of frequency reference setting is assigned to an option card (b1-01 = 3). • The action for the analog card is set for separate terminal input (F2-01 = 0).		Make sure parameters are set properly.
Digital Operator Display		**Error Name**
oPE06	oPE06	Control Method Selection Error
		Correct the setting for the control method.
Cause		**Possible Solutions**
A control mode has been selected that requires a PG option card to be installed, but no PG encoder is installed (A1-02 = 1, 3, or 7).		• Connect a PG option card. • Correct the value set to A1-02.
Digital Operator Display		**Error Name**
oPE07	oPE07	Multi-Function Analog Input Selection Error
		A contradictory setting is assigned to multi-function analog inputs H3-02, H3-06, or H3-10 and PID functions conflict.
Cause		**Possible Solutions**
At least two analog input terminals are set to the same function (i.e., at least two of these parameters has the same setting: H3-02, H3-06, or H3-10).		Change the settings to H3-02, H3-06, and H3-10 so that functions no longer conflict. **Note:** Both 0 (frequency reference bias) and F (not used) can be set to H3-02, H3-06, and H3-10 at the same time.
The following simultaneous contradictory settings: • H3-02, H3-06, or H3-10 = B (PID Feedback) while H6-01 (Pulse Train Input) = 1 (PID Feedback) • H3-02, H3-06, or H3-10 = C (PID Target Value) while H6-01 = 2 (pulse train input sets the PID target value) • H3-02, H3-06, or H3-10 = C (PID Target Value) while b5-18 = 1 (enables b5-19 as the target PID value) • H6-01 = 2 (PID target) while b5-18 = 1 (enables b5-19 as the target PID value)		Disable one of the PID selections.
Digital Operator Display		**Error Name**
oPE08	oPE08	Parameter Selection Error
		A function has been set that cannot be used in the motor control method selected.
Cause		**Possible Solutions**
Attempted to use a function that is not valid for the selected control mode.		Check the motor control method and the functions available.
In Open Loop Vector Control, n2-02 is greater than n2-03		Correct parameter settings so that n2-02 is less than n2-03.
In Open Loop Vector Control, C4-02 is greater than C4-06		Correct parameter settings so that C4-02 is less than C4-06.
In OLV/PM, parameters E5-02 to E5-07 are set to 0.		• Set the correct motor code in accordance with the motor being used (E5-01). • When using a special-purpose motor, set E5-□□ in accordance with the test report provided.
The following settings have occurred in OLV/PM: • E5-03 does not equal 0 • E5-09 and E5-24 are both equal to 0, or neither equals 0		• Set E5-09 or E5-24 to the correct value, and set the other to "0". • Set the motor rated current for PM to "0" (E5-03).
b1-14 (Phase Order Selection) is set to 1 (Switch phase order) when in using a PG option card.		Correct the parameter settings.
In AOLV/PM High Frequency Injection is disabled (n8-57 = 0) and the minimum frequency (E1-09) is set lower than 1/20 of the base frequency setting.		Correct the parameter settings.
Note: Use U1-18 to find which parameters are set outside the specified setting range. Other errors are given precedence over oPE08 when multiple errors occur at the same time.		
Digital Operator Display		**Error Name**
oPE09	oPE09	PID Control Selection Fault
		PID control function selection is incorrect. Requires that PID control is enabled (b5-01 = 1 to 4).
Cause		**Possible Solutions**
The following simultaneous contradictory settings have occurred: • b5-15 not 0.0 (PID Sleep Function Operation Level) • The stopping method is set to either DC Injection Braking or coast to stop with a timer (b1-03 = 2 or 3).		• Set b5-15 to another value besides 0. • Set the stopping method to coast to stop or ramp to stop (b1-03 = 0 or 1).
PID control is set to b5-01 = 1 or 2, but the lower limit for the frequency reference (d2-02) is not set to 0 while reverse output is enabled (b5-11 = 1).		Correct the parameter settings.
PID control is set to b5-01 = 3 or 4, but the lower limit for the frequency reference (d2-01) is not 0.		Correct the parameter settings.

上亞科技有限公司
購買、維修 此手冊零組件
電話： 037-466333
Email: service@repairtw.com
Line Id: @zzzz
www.repairtw.com

Digital Operator Display		Error Name
oPE10	oPE10	V/f Data Setting Error
		The following setting errors have occurred where: • E1-04 is greater than or equal to E1-06, E1-06 is greater than or equal to E1-07, E1-07 is greater than or equal to E1-09, or E1-09 is greater than or equal to E1-11. • E3-04 is greater than or equal to E3-06, E3-06 is greater than or equal to E3-07, E3-07 is greater than or equal to E3-09, or E3-09 is greater than or equal to E3-11.
Cause		**Possible Solutions**
—		Correct the settings for E1-04, E1-06, E1-07, E1-09, and E1-11 (for motor 2, correct E3-04, E3-06, E3-07, E3-09, and E3-11).
Digital Operator Display		**Error Name**
oPE11	oPE11	Carrier Frequency Setting Error
		Correct the setting for the carrier frequency.
Cause		**Possible Solutions**
The following simultaneous contradictory settings: C6-05 is greater than 6 and C6-04 is greater than C6-03 (carrier frequency lower limit is greater than the upper limit). If C6-05 is less than or equal to 6, the drive operates at C6-03.		Correct the parameter settings.
Upper and lower limits between C6-02 and C6-05 contradict each other.		
Digital Operator Display		**Error Name**
oPE13	oPE13	Pulse Monitor Selection Error
		Incorrect setting of monitor selection for pulse train (H6-06).
Cause		**Possible Solutions**
Scaling for the pulse train monitor is set to 0 (H6-07 = 0) while H6-06 is not set to 101, 102, 105, or 116.		Change scaling for the pulse train monitor or set H6-06 to 101, 102, 105, or 116.
Digital Operator Display		**Error Name**
oPE15	oPE15	Torque Control Setting Error
		Parameters settings that are not allowed in combination with Torque Control have been set.
Cause		**Possible Solutions**
Torque Control in enabled (d5-01 = 1) while the Speed/Torque Control switch function is assigned to a digital input (H1-□□ = 71).		Correct the parameter settings.
Either Torque Control is enabled by d5-01 = 1, the or Speed/Torque Control switch is assigned to a digital input H1-□□ = 71, while at the same time: • Feed Forward is enabled (n5-01 = 1), or • Droop Control is enabled (b7-01 ≠ 0), or • Intelligent Stall Prevention or Intelligent Stall Prevention 2 is enabled (L3-04 = 2 or 5), or • A digital input is set for the power KEB 1 or KEB 2 (H1-□□ = 7A or 7B)		
Digital Operator Display		**Error Name**
oPE16	oPE16	Energy Savings Constants Error
Cause		**Possible Solutions**
In AOLV/PM the automatically calculated energy saving coefficients are out of the allowable range.		Check and correct the motor data in E5 parameters.
Digital Operator Display		**Error Name**
oPE18	oPE18	Online Tuning Parameter Setting Error
		Parameters that control Online Tuning are not set correctly.
Cause		**Possible Solutions**
One of the following setting errors has occurred while Online Tuning is enabled in OLV (A1-02 = 2): • E2-02 has been set below 30% of the original default value • E2-06 has been set below 50% of the original default value • E2-03 = 0		Make sure E2-02, E2-03, and E2-06 are set the correct values.

上正科技有限公司
購買、維修此手冊零組件
電話： 037-466333
Email: service@repairtw.com
Line Id: @zzzz
www.repairtw.com

6.7 Auto-Tuning Fault Detection

Auto-Tuning faults are shown below. When the following faults are detected, the fault is displayed on the digital operator and the motor coasts to a stop. Auto-Tuning faults do not trigger an multi-function terminal set for fault or alarm output.

An End☐ error indicates that although Auto-Tuning has completely successful, there is some discrepancy in the calculations the drive made. If an End☐ error occurs, check for what might be causing the error using the table below, and perform Auto-Tuning again once the problem has been taken care of. If there appears to be no problem despite the End☐ error being displayed, go ahead and start the application.

◆ Auto-Tuning Codes, Causes, and Possible Solutions

Table 6.18 Auto-Tuning Codes, Causes, and Possible Solutions

Digital Operator Display		Error Name
End1	End1	Excessive V/f Setting (detected only during Rotational Auto-Tuning, and displayed after Auto-Tuning is complete)
Cause		**Possible Solutions**
The torque reference exceeded 20% during Auto-Tuning.		• Before Auto-Tuning the drive, verify the information written on the motor nameplate and enter that data to T1-03 through T1-05. • Enter proper information to parameters T1-03 to T1-05 and repeat Auto-Tuning. • If possible, disconnect the motor from the load and perform Auto-Tuning. If the load cannot be uncoupled, simply use the Auto-Tuning results as they are.
The results from Auto-Tuning the no-load current exceeded 80%.		
Digital Operator Display		**Error Name**
End2	End2	Motor Iron-Core Saturation Coefficient (detected only during Rotational Auto-Tuning and displayed after Auto-Tuning is complete)
Cause		**Possible Solutions**
Motor data entered during Auto-Tuning was incorrect.		• Make sure the data entered to the T1 parameters match the information written on the motor nameplate. • Restart Auto-Tuning and enter the correct information.
Results from Auto-Tuning are outside the parameter setting range, assigning the iron-core saturation coefficient (E2-07, E2-08) a temporary value.		• Check and correct faulty motor wiring. • Disconnect the motor from machine and perform Rotational Auto-Tuning.
Digital Operator Display		**Error Name**
End3	End3	Rated Current Setting Alarm (displayed after Auto-Tuning is complete)
Cause		**Possible Solutions**
The correct current rating printed on the nameplate was not entered into T1-04.		• Check the setting of parameter T1-04. • Check the motor data and repeat Auto-Tuning.
Digital Operator Display		**Error Name**
End4	End4	Adjusted Slip Calculation Error
Cause		**Possible Solutions**
The slip that was calculated is outside the allowable range.		• Make sure the data entered for Auto-Tuning is correct. • Execute Rotational Auto-Tuning instead. If not possible, try Stationary Auto-Tuning 2.
Digital Operator Display		**Error Name**
End5	End5	Resistance Tuning Error
Cause		**Possible Solutions**
The resistance value that was calculated is outside the allowable range.		• Double check the data that was entered for the Auto-Tuning process. • Check the motor and motor cable connection for faults.
Digital Operator Display		**Error Name**
End6	End6	Leakage Inductance Alarm
Cause		**Possible Solutions**
The leakage inductance value that was calculated is outside the allowable range.		Double check the data that was entered for the Auto-Tuning process.
Digital Operator Display		**Error Name**
End7	End7	No-Load Current Alarm
Cause		**Possible Solutions**
The entered no-load current value was outside the allowable range.		Check and correct faulty motor wiring.
Auto-Tuning results were less than 5% of the motor rated current.		Double check the data that was entered for the Auto-Tuning process.

上証科技有限公司
購買、維修 此手冊委託作
電話： 037-466333
Email: service@repairtw.com
Line id: @zzzz
www.repairtw.com

Digital Operator Display		Error Name
Er-01	Er-01	Motor Data Error
Cause		**Possible Solutions**
Motor data or data entered during Auto-Tuning was incorrect.		• Check that the motor data entered to T1 parameters matches motor nameplate input before Auto-Tuning. • Start Auto-Tuning over again and enter the correct information.
Motor output power and motor-rated current settings (T1-02 and T1-04) do not match.		• Check the drive and motor capacities. • Correct the settings of parameters T1-02 and T1-04.
Motor rated current and detected no-load current are not consistent with another.		• Check the motor rated current and no-load current. • Correct the settings of parameters T1-04 and E2-03.
Base frequency and motor rated speed (T1-05 and T1-07) do not match.		• Set T1-05 and T1-07 to the correct value. • Check if the correct pole number was entered to T1-06.
Digital Operator Display		**Error Name**
Er-02	Er-02	Minor Fault
Cause		**Possible Solutions**
An alarm was triggered during Auto-Tuning.		Exit the Auto-Tuning menu, check the alarm code, remove the alarm cause, and repeat Auto-Tuning.
Digital Operator Display		**Error Name**
Er-03	Er-03	STOP Button Input
Cause		**Possible Solutions**
Auto-Tuning canceled by pressing STOP button.		Auto-Tuning did not complete properly and will have to be performed again.
Digital Operator Display		**Error Name**
Er-04	Er-04	Line-to-Line Resistance Error
Cause		**Possible Solutions**
Motor data entered during Auto-Tuning was incorrect.		• Make sure the data entered to the T1 parameters match the information written on the motor nameplate. • Restart Auto-Tuning and enter the correct information.
Results from Auto-Tuning are outside the parameter setting range or the tuning process took too long.		Check and correct faulty motor wiring.
Motor cable or cable connection faulty.		
Digital Operator Display		**Error Name**
Er-05	Er-05	No-Load Current Error
Cause		**Possible Solutions**
Motor data entered during Auto-Tuning was incorrect.		• Make sure the data entered to the T1 parameters match the information written on the motor nameplate. • Restart Auto-Tuning and enter the correct information.
Results from Auto-Tuning are outside the parameter setting range or the tuning process took too long.		• Check and correct faulty motor wiring. • Perform Rotational Auto-Tuning.
The load during Rotational Auto-tuning was too high.		• Disconnect the motor from machine and restart Auto-Tuning. If motor and load cannot be uncoupled make sure the load is lower than 30%. • If a mechanical brake is installed, make sure it is fully lifted during tuning.
Digital Operator Display		**Error Name**
Er-08	Er-08	Rated Slip Error
Cause		**Possible Solutions**
Motor data entered during Auto-Tuning was incorrect.		• Make sure the data entered to the T1 parameters match the information written on the motor nameplate. • Restart Auto-Tuning and enter the correct information.
Drive-calculated values outside parameter setting range or the tuning process took too long.		• Check and correct faulty motor wiring. • Perform Rotational Auto-Tuning.
The load during rotational Auto-tuning was too high.		• Disconnect the motor from machine and restart Auto-Tuning. If motor and load cannot be uncoupled make sure the load is lower than 30%. • If a mechanical brake is installed, make sure it is fully lifted during tuning.
Digital Operator Display		**Error Name**
Er-09	Er-09	Acceleration Error
Cause		**Possible Solutions**
The motor did not accelerate for the specified acceleration time.		• Increase the acceleration time (C1-01). • Check if it is possible to disconnect the machine from the motor.
Torque limit when motoring is too low (L7-01 and L7-02).		• Check the settings of parameters L7-01 and L7-02. • Increase the setting.
The load during Rotational Auto-Tuning was too high.		• Disconnect the motor from machine and restart Auto-Tuning. If motor and load cannot be uncoupled make sure the load is lower than 30%. • If a mechanical brake is installed, make sure it is fully lifted during tuning.
Digital Operator Display		**Error Name**
Er-10	Er-10	Motor Direction Error
Cause		**Possible Solutions**
The encoder signal lines are not properly connected to the drive.		Check and correct wiring to the PG encoder.
Motor and PG direction are opposite.		Check the motor speed monitor U1-05 while turning the motor manually in forward direction. If the sign displayed is negative, change the setting of parameter F1-05.
The load pulled the motor in the opposite direction of the speed reference and the torque exceeded 100%.		Uncouple the motor from the load and repeat Auto-Tuning.

上正科技有限公司
購買、維修 此手冊零組件
電話：037-466333
Email: service@repairtw.com
Line id: @zzzz
www.repairtw.com

Digital Operator Display		Error Name
Er - 11	Er-11	Motor Speed Fault
Cause		**Possible Solutions**
Torque reference is too high.		• Increase the acceleration time (C1-01). • Disconnect the machine from the motor, if possible.
Digital Operator Display		**Error Name**
Er - 12	Er-12	Current Detection Error
Cause		**Possible Solutions**
One of the motor phases is missing: (U/T1, V/T2, W/T3).		Check motor wiring and correct any problems.
Current exceeded the current rating of the drive.		• Check the motor wiring for a short between motor lines. • If a magnetic contactor is used between motors, make sure it is closed. • Replace either the control board or the entire drive. For instructions on replacing the control board, contact Yaskawa or your nearest sales representative.
The current is too low.		
Attempted Auto-Tuning without motor connected to the drive.		Connect the motor and perform Auto-Tuning.
Current detection signal error.		Replace either the control board or the entire drive. For instructions on replacing the control board, contact Yaskawa or your nearest sales representative.
Digital Operator Display		**Error Name**
Er - 13	Er-13	Leakage Inductance Error
Cause		**Possible Solutions**
Drive was unable to complete tuning for leakage inductance within 300 seconds.		• Check all wiring and correct any mistakes. • Double check the motor rated current value that was entered to T1-04 for Auto-Tuning. • Check the motor rated current value written on the motor nameplate and enter the correct value.
Digital Operator Display		**Error Name**
Er - 14	Er-14	Motor Speed Error 2
Cause		**Possible Solutions**
The motor speed exceeded twice the amplitude of speed reference during Inertia Tuning.		Reduce the ASR gain set to C5-01.
Digital Operator Display		**Error Name**
Er - 15	Er-15	Torque Saturation Error
Cause		**Possible Solutions**
The output torque reached the torque limit set in L7-01 through L7-04 during Inertia Tuning.		• Increase the torque limits in L7-01 through L7-04 (but keep them within reasonable limits). • First try reducing the test signal amplitude in T3-01 and repeat the tuning. If necessary, then try reducing the test signal frequency (T3-02) and repeat the tuning.
Digital Operator Display		**Error Name**
Er - 16	Er-16	Inertia Detection Error
Cause		**Possible Solutions**
The inertia identified by the drive was abnormally small or abnormally large during Inertia Tuning.		• First try reducing the test signal amplitude in T3-01 and repeat the tuning. If necessary, then try reducing the test signal frequency (T3-02) and repeat the tuning. • Check the basic motor inertia value entered to T3-03.
Digital Operator Display		**Error Name**
Er - 17	Er-17	Reverse Prohibited Error
Cause		**Possible Solutions**
Drive is prohibited from rotating the motor in reverse while attempting to perform Inertia Tuning.		• Inertia Auto-Tuning cannot be performed if the drive is restricted from rotating in reverse. • Assuming it is acceptable for the application to rotate in reverse, set b1-04 to 0 and then execute Inertia Tuning.
Digital Operator Display		**Error Name**
Er - 18	Er-18	Induction Voltage Error
Cause		**Possible Solutions**
The induced voltage constant exceeds the allowable setting range.		Double check the data that was entered to the T2-□□ parameters, and perform Auto-Tuning again.
Digital Operator Display		**Error Name**
Er - 19	Er-19	PM Inductance Error
Cause		**Possible Solutions**
The induced voltage constant inductance values set to E5-08 or E5-09 exceed the allowable range.		Double check the data that was entered to the T2-□□ parameters, and perform Auto-Tuning again.
Digital Operator Display		**Error Name**
Er - 20	Er-20	Stator Resistance Error
Cause		**Possible Solutions**
Stator resistance tuning attempted to set a value to E5-06 that is outside the allowable setting range.		Double check the data that was entered to the T2-□□ parameters, and perform Auto-Tuning again.

上正科技有限公司
購買、維修 此手冊零組件
電話：037-[illegible]
Email: service@repairtw.com
Line id: @zzzz
www.repairtw.com

Digital Operator Display		Error Name
Er-21	Er-21	Z Pulse Correction Error
Cause		**Possible Solutions**
Motor was coasting when Auto-Tuning was performed.		Make sure the motor has stopped completely. Repeat Auto-Tuning.
Either the motor or the PG encoder on the motor is not properly wired.		Check the wiring for the motor and the PG encoder. Repeat Auto-Tuning.
The direction for the PG encoder is set incorrectly, or the number of pulses set for the PG encoder is wrong.		Check the direction and number of pulses set for the PG encoder. Repeat Auto-Tuning.
PG encoder is damaged.		Check the signal output from the PG encoder attached to the motor. Replace the PG if damaged.

上正科技有限公司
購買、維修 此手冊零組件
電話： 037-466333
Email: service@repairtw.com
Line id: @zzzz
www.repairtw.com

6.8 Copy Function Related Displays

◆ Tasks, Errors, and Troubleshooting

The table below lists the messages and errors that may appear when using the Copy function.

When executing the tasks offered by the Copy function, the operator will indicate the task being performed. When an error occurs, a code appears on the operator to indicate the error. Note that errors related to the Copy function do not trigger a multi-function output terminal that has been set up to close when a fault or alarm occurs. To clear an error, simply press any key on the operator and the error display will disappear.

Table 6.19 lists the corrective action that can be taken when an error occurs.

Note: **1.** Whenever using the copy function, the drive should be fully stopped.
2. The drive will not accept a Run command while the Copy function is being executed.
3. Parameters can only be saved to a drive when the voltage class, capacity, control mode, and software version match.

Table 6.19 Copy Function Task and Error Displays

Digital Operator Display		Task
CoPy	CoPy	Writing Parameter Settings (flashing)
Cause		**Possible Solutions**
Parameters are being written to the drive.		Not an error.
Digital Operator Display		**Task**
CPEr	CPEr	Control Mode Mismatch
Cause		**Possible Solutions**
Control mode of the parameters to be loaded onto the drive and the control mode already set to the drive don't match.		Check the control mode for the parameters that are to be loaded onto the drive and the control mode set to the drive those parameters will be written to. Set the same control mode using parameter A1-02 and try again.
Digital Operator Display		**Task**
CPyE	CPyE	Error Writing Data
Cause		**Possible Solutions**
Failed writing parameters.		Try writing parameters again.
Digital Operator Display		**Task**
CSEr	CSEr	Copy Unit Error
Cause		**Possible Solutions**
Hardware fault		Replace the operator or the USB Copy Unit.
Digital Operator Display		**Task**
dFPS	dFPS	Drive Model Mismatch
Cause		**Possible Solutions**
The drive from which the parameter were copied and the drive you are attempting to write to are not the same model. • The drive the parameters were copied from is a different model drive. • The drive you attempting to write to is a different model.		Check the model number of the drive that the parameters were copied from and the model of the drive you are attempting to write those parameters to. Make sure the drive from which the parameter are copied and the drive to be written to have the same model numbers and software versions.
Digital Operator Display		**Task**
End	End	Task Complete
Cause		**Possible Solutions**
Finished reading, writing, or verifying parameters.		Not an error.
Digital Operator Display		**Task**
iFEr	iFEr	Communication Error
Cause		**Possible Solutions**
A communication error occurred between the drive and the operator or the USB copy unit.		Check the cable connection.
A non-compatible cable is being used to connect the USB Copy Unit and the drive.		Use the cable originally packaged with the USB Copy Unit.
Digital Operator Display		**Task**
ndAT	ndAT	Model, Voltage Class, Capacity Mismatch
Cause		**Possible Solutions**
The drive the parameters were copied from and the drive you are attempting to write to have different electrical specifications, a different capacity, is set to a different control mode, or is a different model number.		Make sure model numbers and specifications are the same for both drives.
The device being used to write the parameters is blank and does not have any parameters saved on it.		Making sure all connections are correct, and copy the parameter settings onto the USB Copy Unit or the operator.

上正科技有限公司
購買、維修 此手冊更超值
電話： 037-466333
Email: service@repairtw.com
Line Id: @2222
www.repairtw.com

Digital Operator Display		Task
rdEr	rdEr	Error Reading Data
Cause		**Possible Solutions**
Failed while attempting to read parameter settings from the drive.		Press and hold the READ key on the USB Copy Unit for at least one second to have the unit read parameters from the drive.
Digital Operator Display		**Task**
rEAd	rEAd	Reading Parameter Settings (flashing)
Cause		**Possible Solutions**
Displayed while the parameter settings are being read onto the USB Copy Unit.		Not an error.
Digital Operator Display		**Task**
vAEr	vAEr	Voltage Class, Capacity Mismatch
Cause		**Possible Solutions**
The drive the parameters were copied from and the drive you performing the Verify mode on have different electrical specifications or are a different capacity.		Make sure electrical specifications and capacities are the same for both drives.
Digital Operator Display		**Task**
vFyE	vFyE	Parameter settings in the drive and those saved to the copy function are not the same
Cause		**Possible Solutions**
Indicates that parameter settings that have been Read and loaded onto the Copy Unit or Digital Operator are different.		To have parameters be the same, either write the parameters save on the USB Copy Unit or LCD digital operator onto the drive, or Read the parameter settings on the drive onto the USB Copy Unit.
Digital Operator Display		**Task**
vrFy	vrFy	Comparing Parameter Settings (flashing)
Cause		**Possible Solutions**
The Verify mode has confirmed that parameters settings on the drive and parameters read to the copy device are identical.		Not an error.

上正科技有限公司
購買、維修 此手冊零組件
電話： 037-466333
Email: service@repairtw.com
Line id: @zzzz
www.repairtw.com

6.9 Diagnosing and Resetting Faults

When a fault occurs and the drive stops, follow the instructions below to remove whatever conditions triggered the fault, then restart the drive.

◆ Fault Occurs Simultaneously with Power Loss

WARNING! *Electrical Shock Hazard. Ensure there are no short circuits between the main circuit terminals (R/L1, S/L2, and T/L3) or between the ground and main circuit terminals before restarting the drive. Failure to comply may result in serious injury or death and will cause damage to equipment.*

1. Turn on the drive input power.
2. Use monitor parameters U2-☐☐ to display data on the operating status of the drive just before the fault occurred.
3. Remove the cause of the fault and reset.

Note: 1. To find out what faults were triggered, check the fault history in U2-02. Information on drive status when the fault occurred such as the frequency, current, and voltage can be found in U2-03 through U2-20. *Refer to Viewing Fault Trace Data After Fault on page 334* for information on how to view fault data.
2. When the fault continues to be displayed after cycling power, remove the cause of the fault and reset.

◆ If the Drive Still has Power After a Fault Occurs

1. Look at the digital operator for information on the fault that occurred.
2. ***Refer to Fault Displays, Causes, and Possible Solutions on page 306***
3. Reset the fault. ***Refer to Fault Reset Methods on page 335***.

◆ Viewing Fault Trace Data After Fault

上百科技有限公司
購買・維修 此手冊零組件
電話： 037-466333
Email: service@repairtw.com
Line id: @zzzz
www.repairtw.com

	Step		Display/Result
1.	Turn on the drive input power. The first screen displays.	→	- MODE - DRV Rdy FREF (OPR) U1-01= 0.00Hz U1-02= 0.00Hz LSEQ U1-03= 0.00A LREF JOG FWD FWD/REV
2.	Press ∧ or ∨ until the monitor screen is displayed.	→	- MODE - DRV Rdy Monitor Menu U1-01= 0.00Hz U1-02= 0.00Hz LSEQ U1-03= 0.00A LREF JOG FWD FWD/REV
3.	Press ENTER to display the parameter setting screen.	→	-MONITR- DRV Rdy Monitor U1-01= 0.00Hz U1-02= 0.00Hz LSEQ U1-03= 0.00A LREF JOG FWD FWD/REV
4.	Press ∧ and RESET to scroll to monitor U2-02. The fault code shown in U2-02 is the fault that occurred last.	→	- MONITR - DRV Rdy Last Fault U2-02= oC U2-03= 0.00Hz LSEQ U2-04= 0.00Hz LREF JOG FWD FWD/REV
7.	Press ∧ to view drive status information when fault occurred. Parameters U2-03 through U2-20 help determine the cause of a fault. Parameters to be monitored differ depending on the control mode.	→	- MONITR - DRV Rdy Frequency Ref U2-03= 0.00Hz U2-04= 0.00Hz LSEQ U2-05= 0.00A LREF JOG FWD FWD/REV ⋮ - MONITR - DRV Rdy Heatsink Temp U2-20= XX °C U2-01= ----- LSEQ U2-02= ----- LREF JOG FWD FWD/REV

◆ Fault Reset Methods

When a fault occurs, the cause of the fault must be removed and the drive must be restarted. The table below lists the different ways to restart the drive.

After the Fault Occurs	Procedure	
Fix the cause of the fault, restart the drive, and reset the fault	Press RESET on the digital operator.	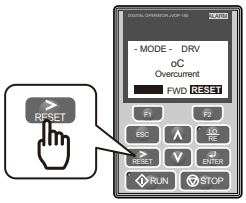
Resetting via Fault Reset Digital Input S4	Close then open the fault signal digital input via terminal S4. S4 is set for "Fault Reset" as default (H1-04 = 14).	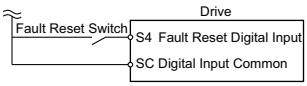
If the above methods do not reset the fault, turn off the drive main power supply. Reapply power after the digital operator display is out.		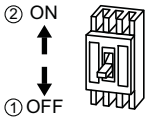

Note: If the Run command is present, the drive will disregard any attempts to reset the fault. The Run command must first be removed before a fault situation can be cleared.

上正科技有限公司
購買、維修 此手冊零組件
電話： 037-466333
Email: service@repairtw.com
Line id: @zzzz
www.repairtw.com

6.10 Troubleshooting without Fault Display

This section describes troubleshooting problems that do not trip an alarm or fault.

The following symptoms indicate that the drive is not set correctly for proper performance with the motor. Refer to *Motor Performance Fine-Tuning on page 296* for guidance on troubleshooting.

- Motor hunting and oscillation
- Poor motor torque
- Poor speed precision
- Poor motor torque and speed response
- Motor noise

◆ Common Problems

Common Problems		Page
Cannot Change Parameter Settings		*336*
Motor Does Not Rotate Properly after Pressing RUN Button or after Entering External Run Command	Motor Does Not Rotate	*337*
	Motor Rotates in the Opposite Direction from the Run Command	*337*
	Motor Rotates in One Direction Only	*338*
Motor is Too Hot		*338*
Drive Does Not Allow Selection of Rotational Auto-Tuning		*338*
oPE02 Error Occurs When Lowering the Motor Rated Current Setting		*338*
Motor Stalls During Acceleration or With Large Loads		*338*
Drive Frequency Reference Differs from the Controller Frequency Reference Command		*339*
Excessive Motor Oscillation and Erratic Rotation		*339*
Deceleration Takes Longer Than Expected with Dynamic Braking Enabled		*339*
Load Falls When Brake is Applied (Hoist-Type Applications)		*339*
Noise From Drive or Output Lines When the Drive is Powered On		*340*
Earth Leakage Circuit Breaker (ELCB) Trips During Run		*340*
Connected Machinery Vibrates When Motor Rotates	Unexpected Noise from Connected Machinery	*340*
	Oscillation or Hunting	*340*
PID Output Fault		*340*
Insufficient Starting Torque		*340*
Motor Rotates After the Drive Output is Shut Off (Motor Rotates During DC Injection Braking)		*341*
Output Frequency is not as High as Frequency Reference		*341*
Buzzing Sound from Motor at 2 kHz		*341*
Unstable Motor Speed when Using PM or IPM		*341*
Motor Does Not Restart after Power Loss		*341*

上正科技有限公司
購買、維修 此手冊零組件
電話： 037-466333
Email: service@repairtw.com
Line Id: @zzzz
www.repairtw.com

◆ Cannot Change Parameter Settings

Cause	Possible Solutions
The drive is running the motor (i.e., the Run command is present).	• Stop the drive and switch over to the Programming Mode. • Most parameters cannot be edited during run.
The Access Level is set to restrict access to parameter settings.	• Set the Access Level to allow parameters to be edited (A1-01 = 2).
The operator is not in the Parameter Setup Mode (the screen will display “PAr”).	• See what mode the operator is currently set for. • Parameters cannot be edited when in the Setup Mode (“STUP”). Switch modes so that “PAr” appears on the screen. Refer to *The Drive and Programming Modes on page 91*.
A multi-function contact input terminal is set to allow or restrict parameter editing (H1-01 through H1-08 = 1B).	• When the terminal is open, parameters cannot be edited. • Turn on the multi-function contact input set to 1B.
The wrong password was entered.	• If the password entered to A1-04 does not match the password saved to A1-05, then drive settings cannot be changed. • Reset the password. If you cannot remember the password: • Scroll to A1-04. Press the STOP button and press ∧ at the same time. Parameter A1-05 will appear. • Set a new password to parameter A1-05.
Undervoltage was detected.	• Check the drive input power voltage by looking at the DC bus voltage (U1-07). • Check all main circuit wiring.

◆ Motor Does Not Rotate Properly after Pressing RUN Button or after Entering External Run Command

■ Motor Does Not Rotate

Cause	Possible Solutions
The drive is not in the Drive Mode.	• Check if the DRV light on the digital operator is lit. • Enter the Drive Mode to begin operating the motor. *Refer to The Drive and Programming Modes on page 91*.
The LO/RE button was pushed.	Stop the drive and check if the correct frequency reference source is selected. If the operator keypad shall be the source, the LO/RE button LED must be on. If the source is REMOTE, it must be off. Take the following steps to solve the problem: • Push the LO/RE button. • If o2-01 is set to 0, then the LO/RE button will be disabled.
Auto-Tuning has just completed.	• When Auto-Tuning completes, the drive is switched back to the Programming Mode. The Run command will not be accepted unless the drive is in the Drive Mode. • Use the digital operator to enter the Drive Mode. *Refer to The Drive and Programming Modes on page 91*.
A Fast Stop was executed and has not yet been reset.	Reset the Fast Stop command.
Settings are incorrect for the source that provides the Run command.	Check parameter b1-02 (Run Command Selection). Set b1-02 so that it corresponds with the correct Run command source. 0: Digital operator 1: Control circuit terminal (default setting) 2: MEMOBUS/Modbus communications 3: Option card
There is faulty wiring in the control circuit terminals.	• Check the wiring for the control terminal. • Correct wiring mistakes. • Check the input terminal status monitor (U1-10).
The drive has been set to accept the frequency reference from the incorrect source.	Check parameter b1-01 (Frequency Reference Selection 1). Set b1-01 to the correct source of the frequency reference. 0: Digital operator 1: Control circuit terminal (default setting) 2: MEMOBUS/Modbus communications 3: Option card 4: Pulse train input (RP)
The terminal set to accept the main speed reference is set to the incorrect voltage and/or current.	If the frequency reference is set at terminal A1, check parameter H3-01 for the correct signal level selection. If terminal A2 is used, check DIP switch S1 parameter H3-08. If terminal A3 is used, check parameter H3-08. *Refer to Terminal A2 Input Signal Selection on page 79*.
Selection for the sink/source mode and the internal/external power supply is incorrect.	Check jumper S3. *Refer to Sinking/Sourcing Mode Switch for Digital Inputs on page 77*.
Frequency reference is too low.	• Check the frequency reference monitor (U1-01). • Increase the frequency by changing the maximum output frequency (E1-09).
Multi-function analog input is set up to accept gain for the frequency reference, but no voltage (current) has been provided.	• Check the multi-function analog input settings. • Check if analog input A1, A2, or A3 is set for frequency reference gain (H3-02, H3-10, H3-06 = 1). If so, check if the correct signal is applied to the terminal. The gain and the frequency reference will be 0 if no signal is applied to the gain input. • Check if H3-02, H3-10, and H3-06 have been set to the proper values. • Check if the analog input value has been set properly. (U1-13 to U1-15)
The STOP button was pressed when the drive was started from a REMOTE source.	• When the STOP button is pressed, the drive will decelerate to stop. • Switch off the Run command and then re-enter a new Run command. • The STOP button can be disabled when o2-02 is set to 0.
Motor starting torque is too low.	*Refer to Motor Performance Fine-Tuning on page 296*
Frequency reference value is too low or the drive does not accept the value entered.	Enter a value that is above the minimum output frequency determined by E1-09.
The sequence Start/Stop sequence is set up incorrectly.	• If the drive is supposed to be set up for a 2-wire sequence, then ensure parameters H1-03 through H1-08 are not set to 0. • If the drive is supposed to be set up for a 3-wire sequence, then one of the parameters H1-03 through H1-08 must be set to 0. Terminal S1 will become the Start, terminal S2 will become the Stop input.

■ Motor Rotates in the Opposite Direction from the Run Command

Cause	Possible Solutions
Phase wiring between the drive and motor is incorrect.	• Check the motor wiring. • Switch two motor cables (U, V, and W) to reverse motor direction. • Connect drive output terminals U/T1, V/T2, and W/T3 in the right order to match motor terminals U, V, and W. • Change the setting of parameter b1-14.
The forward direction for the motor is setup incorrectly.	Typically, forward is designated as being counterclockwise when looking from the motor shaft (see figure below). 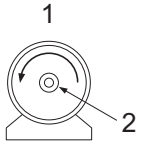 1. Forward Rotating Motor (looking down the motor shaft) 2. Motor Shaft

上正科技有限公司
購買、維修 此手冊零組件
電話： 037-466333
Email: service@repairtw.com
Line id: @zzzz
www.repairtw.com

Cause	Possible Solutions
The motor is running at almost 0 Hz and the Speed Search estimated the speed to be in the opposite direction.	• Disable bi-directional search (b3-14 = “0”) so that Speed Search is performed only in the specified direction.

Note: Check the motor specifications for the forward and reverse directions. The motor specifications will vary depending on the manufacturer of the motor.

■ Motor Rotates in One Direction Only

Cause	Possible Solutions
The drive prohibits reverse rotation.	• Check parameter b1-04. • Set the drive to allow the motor to rotate in reverse (b1-04 = 0).
A Reverse run signal has not been entered, although 3-wire sequence is selected.	• Make sure that one of the input terminals S3 to S8 used for the 3-wire sequence has been set for reverse.

◆ Motor is Too Hot

Cause	Possible Solutions
The load is too heavy.	If the load is too heavy for the motor, the motor will overheat as it exceeds its rated torque value for an extended period of time. Keep in mind that the motor also has a short-term overload rating in addition to the possible solutions provided below: • Reduce the load. • Increase the acceleration and deceleration times. • Check the values set for the motor protection (L1-01, L1-02) as well as the motor rated current (E2-01). • Increase motor capacity.
The air around the motor is too hot.	• Check the ambient temperature. • Cool the area until it is within the specified temperature range.
The drive is operating in a vector control mode but Auto-Tuning has not yet been performed.	• Perform Auto-Tuning. • Calculate the motor value and reset the motor parameters. • Change the motor control method to V/f Control (A1-02 = 0).
Insufficient voltage insulation between motor phases.	When the motor cable is long, high voltage surges occur between the motor coils and drive switching. Normally, surges can reach up to three times the drive input power supply voltage (600 V for 200 V class, and 1200 V for 400 V class). • Use a motor with a voltage tolerance higher than the max voltage surge. • Use a motor designed to work specifically with a drive when using a 400 V class unit. • Install an AC reactor on the output side of the drive. The carrier frequency should be set to 2 kHz when installing an AC reactor.
The motor fan has stopped or is clogged.	Check the motor fan.

可北科技有限公司
購買 維修 此手冊裝置件
電話 037-466333
Email service@xxx.com
Line id: @zzzz
www.repairtw.com

◆ Drive Does Not Allow Selection the Desired Auto-Tuning Mode

Cause	Possible Solutions
The desired Auto-Tuning mode is not available for the selected control mode.	• Check if the desired tuning mode is available for the selected control mode. Refer to *Auto-Tuning on page 109*. • Change the motor control method by setting A1-02.

◆ oPE02 Error Occurs When Lowering the Motor Rated Current Setting

Cause	Possible Solutions
Motor rated current and the motor no-load current setting in the drive are incorrect.	• The user is trying to set the motor rated current in E2-01 to a value lower than the no-load current set in E2-03. • Make sure that value set in E2-01 is higher than E2-03. • If it is necessary to set E2-01 lower than E2-03, first lower the value set to E2-03, then change the setting in E2-01 as needed.

◆ Motor Stalls during Acceleration or Acceleration Time is Too Long

Cause	Possible Solutions
Torque limit has been reached or current suppression keeps the drive from accelerating.	Take the following steps to resolve the problem: • Reduce the load. • Increase motor capacity. **Note:** Although the drive has a Stall Prevention function and a Torque Compensation Limit function, accelerating too quickly or trying to drive an excessively large load can exceed the capabilities of the motor.
Load is too heavy.	
Torque limit is not set properly.	Check the torque limit setting.
Frequency reference is too low.	• Check the maximum output frequency (E1-04). • Increase E1-04 if it is set too low.
	Check U1-01 for proper frequency reference.
	Check if a frequency reference signal switch has been set to one of the multi-function input terminals.
	Check for low gain level set to terminals A1, A2, or A3 (H3-03, H3-11, H3-07).
Load is too heavy.	• Reduce the load so that the output current remains within the motor rated current. • In extruder and mixer applications, the load will sometimes increase as the temperature drops.
	• Increase the acceleration time. • Check if the mechanical brake is fully releasing as it should.
Acceleration time has been set too long.	Check if the acceleration time parameters have been set too long (C1-01, C1-03, C1-05, C1-07).

Cause	Possible Solutions
Motor characteristics and drive parameter settings are incompatible with one another.	• Set the correct V/f pattern so that it matches the characteristics of the motor being used. • Check the V/f pattern set to E1-03. • Execute Rotational Auto-Tuning.
Although the drive is operating in Open Loop Vector motor control method, Auto-Tuning has not been performed.	• Perform Auto-Tuning. • Calculate motor data and reset motor parameters. • Switch to V/f Control (A1-02 = 0).
Incorrect frequency reference setting.	• Check the multi-function analog input settings. Multi-function analog input terminal A1, A2, or A3 is set for frequency gain (H3-02, H3-10, or H3-06 is set to "1"), but there is no voltage or current input provided. • Make sure H3-02, H3-10, and H3-06 are set to the proper values. • See if the analog input value is set to the right value (U1-13 to U1-15).
The Stall Prevention level during acceleration and deceleration set too low.	• Check the Stall Prevention level during acceleration (L3-02). • If L3-02 is set too low, acceleration may be taking too long. • Increase L3-02.
The Stall Prevention level during run has been set too low.	• Check the Stall Prevention level during run (L3-06). • If L3-06 is set too low, speed will drop as the drive outputs torque. • Increase the setting value.
Drive reached the limitations of the V/f motor control method.	• The motor cable may be long enough (over 50 m) to require Auto-Tuning for line-to-line resistance. • Be aware that V/f Control is comparatively limited when it comes to producing torque at low speeds. • Consider switching to Open Loop Vector Control.

◆ Drive Frequency Reference Differs from the Controller Frequency Reference Command

Cause	Possible Solutions
The analog input gain and bias for the frequency reference input are set to incorrect values.	• Check the gain and bias settings for the analog inputs that are used to set the frequency reference. Check parameters H3-03 and H3-04 for input A1, check parameters H3-11 and H3-12 for input A2, and check parameters H3-07 and H3-08 for input A3. • Set these parameters to the appropriate values.
A frequency bias signal is being entered via analog input terminals A1 to A3.	• If more than one of multi-function analog inputs A1 to A3 is set for frequency reference bias (H3-02, H3-10, or H3-06 is set to "0"), then the sum of all signals builds the frequency reference. • Make sure that H3-02, H3-10, and H3-06 are set appropriately. • Check the input level set for terminals A1 to A3 (U1-13 to U1-15).
PID control is enabled, and the drive is consequently adjusting the output frequency to match the PID setpoint. The drive will only accelerate to the maximum output frequency set in E1-04 while PID control is active.	If PID control is not necessary for the application, disable it by setting b5-01 to "0".

上正科技有限公司
購買、維修 此手冊零組件
電話： 037-466333
Email: service@repairtw.com
Line id: @7777
www.repairtw.com

◆ Excessive Motor Oscillation and Erratic Rotation

Cause	Possible Solutions
Poor balance between motor phases.	Check drive input power voltage to ensure that it provides stable power.
Hunting prevention function is disabled.	• Enable Hunting Prevention (n1-01 = 1). • Increase the AFR gain (n2-01) or the AFR time constant (n2-02).

◆ Deceleration Takes Longer Than Expected with Dynamic Braking Enabled

Cause	Possible Solutions
L3-04 is set incorrectly.	• Check the Stall Prevention level during deceleration (L3-04). • If a dynamic braking option has been installed, disable Stall Prevention during deceleration (L3-04 = 0).
The deceleration time is set too long.	Set deceleration to more appropriate time (C1-02, C1-04, C1-06, C1-08).
Insufficient motor torque.	• Assuming parameter settings are normal and that no overvoltage occurs when there is insufficient torque, it is likely that the demand on the motor has exceeded the motor capacity. • Use a larger motor.
Reaching the torque limit.	• Check the settings for the torque limit (L7-01 through L7-04). • If the torque limit is enabled, deceleration might take longer than expected because the drive cannot output more torque than the limit setting. Ensure the torque limit is set to a high enough value. • Increase the torque limit setting.
	• If multi-function analog input terminal A1, A2, or A3 is set to torque limit (H3-02, H3-10, or H3-06 equals 10, 11, 12, or 15), ensure that the analog input levels are set to the correct levels. • Ensure H3-02, H3-10, and H3-06 are set to the right levels. • Ensure the analog input is set to the correct value (U1-13 to U1-15).
Load exceeded the internal torque limit determined by the drive rated current.	Switch to a larger capacity drive.

◆ Load Falls When Brake is Applied (Hoist-Type Applications)

Cause	Possible Solutions
The timing for the brake to close and release is not set properly.	Refer to *Notes on Controlling the Brake when Using the Hoist Application Preset on page 106*.
Insufficient DC Injection Braking.	Increase the amount of DC Injection Braking (b2-02).

◆ Noise From Drive or Output Lines When the Drive is Powered On

Cause	Possible Solutions
Relay switching in the drive generates excessive noise.	• Lower the carrier frequency (C6-02). • Install a noise filter on the input side of drive input power. • Install a noise filter on the output side of the drive. • Place the wiring inside a metal conduit to shield it from switching noise. • Ground the drive and motor properly. • Separate the main circuit wiring and the control lines. • Make sure wires and the motor have been properly grounded.

◆ Earth Leakage Circuit Breaker (ELCB) Trips During Run

Cause	Possible Solutions
Excessive leakage current trips ELCB.	• Increase the ELCB sensitivity or use ELCB with a higher threshold. • Lower the carrier frequency (C6-02). • Reduce the length of the cable used between the drive and the motor. • Install a noise filter or reactor on the output side of the drive. Set the carrier frequency to 2 kHz when connecting a reactor.

◆ Connected Machinery Vibrates When Motor Rotates

■ Unexpected Noise from Connected Machinery

Cause	Possible Solutions
The carrier frequency is at the resonant frequency of the connected machinery.	Adjust the carrier frequency using parameters C6-02 through C6-05.
The drive output frequency is the same as the resonant frequency of the connected machinery.	• Adjust the parameters used for the Jump frequency function (d3-01 through d3-04) to skip the problem-causing bandwidth. • Place the motor on a rubber pad to reduce vibration.

Note: The drive may have trouble assessing the status of the load due to white noise generated from using Swing PWM (C6-02 = 7 to A).

上正科技有限公司
購買、維修 此手冊零組件
電話： 037-466333
Email: service@repairtw.com
Line id: @2222
www.repairtw.com

■ Oscillation or Hunting

Cause	Possible Solutions
Insufficient tuning.	Perform Auto-Tuning. Refer to ***Motor Performance Fine-Tuning on page 296***.
Gain is too low when using PID control.	Refer to ***b5: PID Control on page 152*** for details.
The frequency reference is assigned to an external source and the signal is noisy.	• Ensure that noise is not affecting the signal lines. • Separate main circuit wiring and control circuit wiring. • Use twisted-pair cables or shielded wiring for the control circuit. • Increase the analog input time filter constant (H3-13).
The cable between the drive and motor is too long.	• Perform Auto-Tuning. • Reduce the length of the cable.

◆ PID Output Fault

Cause	Possible Solutions
No PID feedback input.	• Check the multi-function analog input terminal settings. • Set multi-function analog input terminal A1, A2, or A3 for PID feedback (H3-02, H3-10, or H3-06 = “B”). • A signal input to the terminal selection for PID feedback is needed. • Check the connection of the feedback signal. • Check the various PID-related parameter settings. • No PID feedback input to the terminal causes the value detected to be 0, causing a PID fault and the drive to operate at max frequency.
The level of detection and the target value do not correspond with each other.	• PID control keeps the difference between target and detection values at 0. Set the input level for the values relative to one another. • Use analog input gains H3-03 and H3-11 to adjust PID target and feedback signal scaling.
Reverse drive output frequency and speed detection. When output frequency rises, the sensor detects a speed decrease.	Set PID output for reverse characteristics (b5-09 = 1).
Adjustment made to PID parameter settings are insufficient.	Refer to ***b5: PID Control on page 152*** for details.

◆ Insufficient Starting Torque

Cause	Possible Solutions
Auto-Tuning has not yet been performed (required for vector control modes).	Perform Auto-Tuning. Refer to ***Motor Performance Fine-Tuning on page 296***.
The control mode was changed after performing Auto-Tuning.	Perform Auto-Tuning again.
Only Stationary Auto-Tuning was performed.	Perform Rotational Auto-Tuning.

◆ Motor Rotates After the Drive Output is Shut Off (Motor Rotates During DC Injection Braking)

Cause	Possible Solutions
DC Injection Braking is set too low and the drive cannot decelerate properly.	• Adjust the DC Injection braking settings. • Increase the current level for DC Injection Braking (b2-02). • Increase the DC Injection Braking time at stop (b2-04).
The stopping method is set so that the drive coasts to stop.	Set b1-03 (Stopping Method Selection) to 0 or 2.

◆ Output Frequency is not as High as Frequency Reference

Cause	Possible Solutions
Frequency reference is set within the range of the Jump frequency.	• Adjust the parameters used for the Jump frequency function (d3-01, d3-02, d3-03). • Enabling the Jump frequency prevents the drive from outputting the frequencies specified in the Jump range.
Upper limit for the frequency reference has been exceeded.	• Set the maximum output frequency and the upper limit for the frequency reference to more appropriate values (E1-04, d2-01). • The following calculation yields the upper value for the output frequency = E1-04 x d2-01 / 100
Large load triggered Stall Prevention function during acceleration.	• Reduce the load. • Adjust the Stall Prevention level during acceleration (L3-02).

◆ Buzzing Sound from Motor at 2 kHz

Cause	Possible Solutions
Exceeded 110% of the rated output current of the drive while operating at low speeds.	• If the output current rises too high at low speeds, the carrier frequency is automatically reduced and causes a whining or buzzing sound. • If the sound is coming from the motor, disable carrier frequency derating (L8-38 = 0). • Disabling the automatic carrier frequency derating increases the chances of an overload fault (oL2). Switch to a larger capacity motor if oL2 faults occur too frequently.

◆ Unstable Motor Speed when Using PM

上正科技有限公司
購買、維修 此手冊零組件
電話： 037-466333
Email: service@repairtw.com
Line Id: @zzzz
www.repairtw.com

Cause	Possible Solutions
The motor code for the PM motor (E5-01 or T2-02) is set incorrectly (Yaskawa motors only).	Refer to *Motor Performance Fine-Tuning on page 296* for details.
Drive is attempting to operate the motor beyond the speed control range listed in the specifications.	Check the speed control range and adjust the speed accordingly.
Motor hunting occurs.	Refer to *Motor Performance Fine-Tuning on page 296* for details.
Hunting occurs at start.	Increase the S-curve time at the start of acceleration (C2-01).
Too much current is flowing through the drive.	• Enter the correct motor code for the PM motor being used into E5-01. • For special-purpose motors, enter the correct data to all E5 parameters according to the test report provided for the motor.

◆ Motor Does Not Restart after Power Loss

Cause	Possible Solutions
The Run command was not issued again when power was restored.	• Check the sequence and wiring that has been set up to enter the Run command. • A relay should be set up to make sure the Run command remains enabled throughout any power loss.
The relay that is supposed to maintain the Run command has been switched off.	Check wiring and circuitry for the relay intended to keep the Run command enabled.

上正科技有限公司
購買、維修 此手冊零組件
電話： 037-466333
Email: service@repairtw.com
Line id: @zzzz
www.repairtw.com

7

Periodic Inspection & Maintenance

This chapter describes the periodic inspection and maintenance of the drive to ensure that it receives the proper care to maintain overall performance.

7.1 SECTION SAFETY 344
7.2 INSPECTION 347
7.3 PERIODIC MAINTENANCE 349
7.4 COOLING FAN AND CIRCULATION FAN 351
7.5 DRIVE REPLACEMENT 369

上正科技有限公司
購買、維修 此手冊零組件
電話： 037-466333
Email: service@repairtw.com
Line id: @zzzz
www.repairtw.com

7.1 Section Safety

DANGER

Electrical Shock Hazard

Do not connect or disconnect wiring while the power is on.

Failure to comply will result in death or serious injury.

Before servicing, disconnect all power to the equipment. The internal capacitor remains charged even after the power supply is turned off. The charge indicator LED will extinguish when the DC bus voltage is below 50 Vdc. To prevent electric shock, wait for at least the time specified on the warning label once all indicators are OFF, and then measure the DC bus voltage level to confirm it has reached a safe level.

Never connect or disconnect wiring, remove connectors or option cards, or replace the cooling fan while the power is on.

Failure to comply will result in death or serious injury.

Before servicing, disconnect all power to the equipment. The internal capacitor remains charged even after the power supply is turned off.

WARNING

Electrical Shock Hazard

Do not operate equipment with covers removed.

Failure to comply could result in death or serious injury.

The diagrams in this section may show drives without covers or safety shields to show details. Be sure to reinstall covers or shields before operating the drives and run the drives according to the instructions described in this manual.

Always ground the motor-side grounding terminal.

Improper equipment grounding could result in death or serious injury by contacting the motor case.

Do not remove covers or touch circuit boards while the power is on.

Failure to comply could result in death or serious injury.

Do not allow unqualified personnel to perform work on the drive.

Failure to comply could result in death or serious injury.

Installation, maintenance, inspection, and servicing must be performed only by authorized personnel familiar with installation, adjustment, and maintenance of AC drives.

Do not perform work on the drive while wearing loose clothing, jewelry or without eye protection.

Failure to comply could result in death or serious injury.

Remove all metal objects such as watches and rings, secure loose clothing, and wear eye protection before beginning work on the drive.

Do not touch any terminals before the capacitors have fully discharged.

Failure to comply could result in death or serious injury.

Before wiring terminals, disconnect all power to the equipment. The internal capacitor remains charged even after the power supply is turned off. After shutting off the power, wait for at least the amount of time specified on the drive before touching any components.

上正科技有限公司
購買 維修 此手冊零組件
電話： 037-406333
Email: service@repairtw.com
Line id: @zzzz
www.repairtw.com

⚠ WARNING

Fire Hazard

Tighten all terminal screws to the specified tightening torque.

Loose electrical connections could result in death or serious injury by fire due to overheating of electrical connections.

Do not use an improper voltage source.

Failure to comply could result in death or serious injury by fire.

Verify that the rated voltage of the drive matches the voltage of the incoming power supply before applying power.

Do not use improper combustible materials.

Failure to comply could result in death or serious injury by fire.

Attach the drive to metal or other noncombustible material.

NOTICE

Observe proper electrostatic discharge procedures (ESD) when handling the drive and circuit boards.

Failure to comply may result in ESD damage to the drive circuitry.

Follow cooling fan replacement instructions. The cooling fan cannot operate properly when it is installed incorrectly and could seriously damage the drive.

Follow the instructions in this manual to replace the cooling fan, making sure that the label is on top before inserting the cooling fan into the drive. To ensure maximum useful product life, replace both cooling fans when performing maintenance.

上正科技有限公司
購買、維修此手冊電洽
電話： 037-466333
Email: service@repairtw.com
Line id: @zzzz
www.repairtw.com

Never connect or disconnect the motor from the drive while the drive is outputting voltage.

Improper equipment sequencing could result in damage to the drive.

Do not use unshielded cable for control wiring.

Failure to comply may cause electrical interference resulting in poor system performance. Use shielded, twisted-pair wires and ground the shield to the ground terminal of the drive.

Do not allow unqualified personnel to use the product.

Failure to comply could result in damage to the drive or braking circuit.

Maintenance, inspection, and replacement of parts must be performed only by authorized personnel familiar with installation, adjustment and maintenance of AC drives.

Do not modify the drive circuitry.

Failure to comply could result in damage to the drive and will void warranty.

Yaskawa is not responsible for any modification of the product made by the user. This product must not be modified.

Check all the wiring to ensure that all connections are correct after installing the drive and connecting any other devices.

Failure to comply could result in damage to the drive.

Comply with proper wiring practices.

The motor may run in reverse if the phase order is backward.

Connect motor input terminals U, V and W to drive output terminals U/T1,V/T2, and W/T3. The phase order for the drive and motor should match.

NOTICE

Frequently switching the drive power supply to stop and start the motor can damage the drive.

To get the full performance life out of the electrolytic capacitors and circuit relays, refrain from switching the drive power supply off and on more than once every 30 minutes. Frequent use can damage the drive. Use the drive to stop and start the motor.

Do not operate damaged equipment.

Failure to comply could result in further damage to the equipment.

Do not connect or operate any equipment with visible damage or missing parts.

上正科技有限公司
購買、維修 此手冊零組件
電話： 037-466333
Email: service@repairtw.com
Line id: @zzzz
www.repairtw.com

7.2 Inspection

Power electronics have limited life and may exhibit changes in characteristics or performance deterioration after years of use under normal conditions. To help avoid such problems, it is important to perform preventive maintenance and periodic inspection on the drive.

Drives contain a variety of power electronics such as power transistors, semiconductors, capacitors, resistors, fans, and relays. The electronics in the drive serve a critical role in maintaining proper motor control.

Follow the inspection lists provided in this chapter as a part of a regular maintenance program.

Note: The drive will require more frequent inspection if it is placed in harsh environments, such as:

- High ambient temperatures
- Frequent starting and stopping
- Fluctuations in the AC supply or load
- Excessive vibrations or shock loading
- Dust, metal dust, salt, sulfuric acid, chlorine atmospheres
- Poor storage conditions.

Perform the first equipment inspection one to two years after installation.

◆ Recommended Daily Inspection

Table 7.1 outlines the recommended daily inspection for Yaskawa drives. Check the following items on a daily basis to avoid premature deterioration in performance or product failure. Copy this checklist and mark the “Checked” column after each inspection.

上正科技有限公司
購買、維修 此手冊零組件
電話： 037-466333
Email: service@repairtw.com
Line id: @zzzz
www.repairtw.com

Table 7.1 General Recommended Daily Inspection Checklist

Inspection Category	Inspection Points	Corrective Action	Checked
Motor	Inspect for abnormal oscillation or noise coming from the motor.	• Check the load coupling. • Measure motor vibration. • Tighten all loose components.	
Cooling	Inspect for abnormal heat generated from the drive or motor and visible discoloration.	• Check for excessive load. • Loose connections • Check for dirty heatsink or motor. • Ambient temperature	
	Inspect drive cooling fan and circulation fan operation.	• Check for clogged or dirty fan. • Check fan operation drive parameter.	
Environment	Verify the drive environment complies with the specifications listed in *Installation Environment on page 40*.	• Eliminate the source of contaminants or correct poor environment.	
Load	The drive output current should not be higher than the motor or drive rating for an extended period of time.	• Check for excessive load. • Check the motor parameter settings of the drive.	
Power Supply Voltage	Check main power supply and control voltages.	• Correct the voltage or power supply to within nameplate specifications. • Verify all main circuit phases.	

◆ Recommended Periodic Inspection

Table 7.2 outlines the recommended periodic inspections for Yaskawa drive installations. Although periodic inspections should generally be performed once a year; the drive may require more frequent inspection in harsh environments or with rigorous use. Operating and environmental conditions, along with experience in each application, will determine the actual inspection frequency for each installation. Periodic inspection will help to avoid premature deterioration in performance or product failure. Copy this checklist and mark the "Checked" column after each inspection.

■ Periodic Inspection

WARNING! *Electrical Shock Hazard. Do not inspect, connect, or disconnect any wiring while the power is on. Failure to comply can result in serious personal injury. Before servicing the drive, disconnect all power to the equipment. The internal capacitor remains charged even after the power supply is turned off. After shutting off the power, wait for at least the amount of time specified on the drive before touching any components.*

Table 7.2 Periodic Inspection Checklist

Inspection Area	Inspection Points	Corrective Action	Checked
Main Circuit Periodic Inspection			
General	• Inspect equipment for discoloration from overheating or deterioration. • Inspect for damaged or deformed parts.	• Replace damaged components as required. • The drive has few serviceable parts and may require complete drive replacement.	
	• Inspect for dirt, foreign particles, or dust collection on components.	• Inspect enclosure door seal if used. • Use dry air to clear away foreign matter. Use a pressure of 39.2×10^4 to 58.8×10^4 Pa (4 - 6 kg·cm^2). • Replace components if cleaning is not possible.	
Conductors and Wiring	• Inspect wiring and connections for discoloration, damage, or heat stress. • Inspect wire insulation and shielding for wear.	• Repair or replace damaged wiring.	
Terminals	• Inspect terminals for stripped, damaged, or loose connections.	• Tighten loose screws and replace damaged screws or terminals.	
Relays and Contactors	• Inspect contactors and relays for excessive noise during operation. • Inspect coils for signs of overheating such as melted or cracked insulation.	• Check coil voltage for over or under voltage conditions. • Replace damaged removable relays contactors or circuit board.	
Braking Resistors	• Inspect for discoloration of heat stress on or around resistors.	• Minor discoloration may be acceptable. • If discoloration exists check for loose connections.	
Electrolytic Capacitor	• Inspect for leaking, discoloration, or cracks. • Check if the cap has come off, for any swelling, or if the sides have burst open.	• The drive has few serviceable parts and may require complete drive replacement.	
Diode, IGBT (Power Transistor)	• Inspect for dust or other foreign material collected on the surface.	• Use dry air to clear away foreign matter. Use a pressure of 39.2×10^4 to 58.8×10^4 Pa (4 - 6 kg·cm^2).	
Motor Periodic Inspection			
Operation Check	• Check for increased vibration or abnormal noise.	• Stop the motor and contact qualified maintenance personnel as required.	
Control Circuit Periodic Inspection			
General	• Inspect terminals for stripped, damaged, or loose connections. • Make sure all terminals have been properly tightened.	• Tighten loose screws and replace damaged screws or terminals. • If terminals are integral to a circuit board, then board or drive replacement may be required.	
Circuit Boards	• Check for any odor, discoloration, and rust. Make sure connections are properly fastened and that no dust or oil mist has accumulated on the surface of the board.	• Fix any loose connections. • If an antistatic cloth or vacuum plunger can't be used, replace the board. • Do not use any solvents to clean the board. • Use dry air to clear away foreign matter. Use a pressure of 39.2×10^4 to 58.8×10^4 Pa (4 - 6 kg·cm^2). • The drive has few serviceable parts and may require complete drive replacement.	
Cooling System Periodic Inspection			
Cooling Fan, Circulation Fan Control Board Cooling Fan	• Check for abnormal oscillation or unusual noise. • Check for damaged or missing fan blades.	• Replace as required. *Refer to Cooling Fan and Circulation Fan on page 351* for information on cleaning or replacing the fan.	
Heatsink	• Inspect for dust or other foreign material collected on the surface.	• Use dry air to clear away foreign matter. Use a pressure of 39.2×10^4 to 58.8×10^4 Pa (4 - 6 kg·cm^2).	
Air Duct	• Inspect air intake and exhaust openings. They must be free from obstruction and properly installed.	• Visually inspect the area. • Clear obstructions and clean air duct as required.	
Display Periodic Inspection			
Digital Operator	• Make sure data appears on the operator properly. • Inspect for dust or other foreign material that may have collected on surrounding components.	• Contact your Yaskawa representative if there is any trouble with the display or keypad. • Clean the digital operator.	

上正科技有限公司
購買、維修 此手冊零組件
電話： 037-466333
Email: service@repairtw.com
Line id: @zzzz
www.repairtw.com

7.3 Periodic Maintenance

The drive has Maintenance Monitors that keep track of component wear. This feature provides advance maintenance warning and eliminates the need to shut down the entire system for unexpected problems. The drive allows the user to check predicted maintenance periods for the components listed below.

- Cooling Fan, Circulation Fan, Control Board Cooling Fan
- Electrolytic Capacitors
- Inrush Prevention Circuit
- IGBTs

For replacement parts, contact the distributor where the drive was purchased or contact Yaskawa directly.

◆ Replacement Parts

Table 7.3 contains the estimated performance life of components that require replacement during the life of the drive. Only use Yaskawa replacement parts for the appropriate drive model and revision.

Table 7.3 Estimated Performance Life

Component	Estimated Performance Life
Cooling Fan, Circulation Fan	10 years
Electrolytic Capacitors	10 years <1>

<1> The drive has few serviceable parts and may require complete drive replacement.

NOTICE: *Estimated performance life based on specific usage conditions. These conditions are provided for the purpose of replacing parts to maintain performance. Some parts may require more frequent replacement due to poor environments or rigorous use. Usage conditions for estimated performance life:*
• Ambient temperature: Yearly average of 40°C (IP00 enclosure)
• Load factor: 80% maximum
• Operation time: 24 hours a day

上亞科技有限公司
購買、維修 此手冊零組件
電話： 037-466333
Email: service@repairtw.com
www.repairtw.com

■ Performance Life Monitors Maintenance Monitors

The drive calculates the maintenance period for components that may require replacement during the life of the drive. A percentage of the maintenance period is displayed on the digital operator by viewing the appropriate monitor parameter.

When the maintenance period reaches 100%, there is increased risk that the drive may malfunction. Yaskawa recommends checking the maintenance period regularly to ensure maximum performance life.

Refer to Recommended Periodic Inspection on page 348 for more details.

Table 7.4 Performance Life Monitors Used for Component Replacement

Parameter	Component	Contents
U4-03	Cooling Fan, Circulation Fan, Control Board Cooling Fan	Displays the accumulated operation time of the fan, from 0 to 99999 hours. This value is automatically reset to 0 once it reaches 99999.
U4-04		Displays the accumulated fan operation time as a percentage of the specified maintenance period.
U4-05	DC Bus Capacitors	Displays the accumulated time the capacitors are used as a percentage of the specified maintenance period.
U4-06	Inrush (pre-charge) Relay	Displays the number of times the drive is powered up as a percentage of the performance life of the inrush circuit.
U4-07	IGBT	Displays the percentage of the maintenance period reached by the IGBTs.

■ Alarm Outputs for Maintenance Monitors

An output can be set up to inform the user when a specific components has neared its expected performance life.

When one of multi-function digital output terminals has been assigned the maintenance monitor function (H2-☐☐ = 2F), the terminal will close when the cooling fan, DC bus capacitors, or DC bus pre-charge relay reach 90% of the expected performance life, or the IGBTs have reached 50% of their expect performance life. Additionally the digital operator will display an alarm like shown in *Table 7.5* to indicate the specific components that may need maintenance.

Table 7.5 Maintenance Alarms

Alarm Display		Function	Corrective Action
LED Operator	LCD Operator		
LT-1 <1>	LT-1	The cooling fans have reached 90% of their designated life time.	Replace the cooling fan.
LT-2 <1>	LT-2	The DC bus capacitors have reached 90% of their designated life time.	Replace the drive.

Alarm Display		Function	Corrective Action
LED Operator	LCD Operator		
LT-3 <1>	LT-3	The DC bus charge circuit has reached 90% of its designated life time.	Replace the drive.
LT-4 <1>	LT-4	The IGBT's have reached 50% of their designated life time.	Check the load, carrier frequency, and output frequency.
TrPC <2>	TrPC	The IGBT's have reached 90% of their designated life time.	Replace the drive.

<1> This alarm message will be output only if the Maintenance Monitor function is assigned to one of the digital outputs (H2-□□ = 2F). The alarm will also trigger a digital output that is programmed for alarm indication (H2-□□ = 10).
<2> This alarm message will always be output, even if the Maintenance Monitor function is not assigned to any of the digital outputs (H2-□□ = 2F). The alarm will also trigger a digital output that is programmed for alarm indication (H2-□□ = 10).

■ Related Drive Parameters

Parameters o4-03, o4-05, o4-07, and o4-09 can be used to reset a Maintenance Monitor back to zero after a specific component has been replaced. *Refer to Parameter Table on page 400* for details on parameter settings.

NOTICE: *If these parameters are not reset after the corresponding parts have been replaced, the Maintenance Monitor function will continue to count down the performance life from the value that was reached with the old part. If the Maintenance Monitor is not reset, the drive will not have the correct value of the performance life for the new component.*

上正科技有限公司
購買、維修 此手冊零組件
電話： 037-466333
Email: service@repairtw.com
Line id: @zzzz
www.repairtw.com

7.4 Cooling Fan and Circulation Fan

NOTICE: *Follow cooling fan replacement instructions. The cooling fan cannot operate properly when installed incorrectly and could seriously damage the drive. To ensure maximum useful product life, replace all cooling fans when performing maintenance.*

Contact your Yaskawa representative or the nearest Yaskawa sales office to order replacement cooling fans as required.

For drives with multiple cooling fans, replace all the fans when performing maintenance to ensure maximum product performance life.

◆ Number of Fan

Three-Phase 200 V Class				Three-Phase 400 V Class				
Model CIMR-A□	Cooling Fan	Circulation Fan	Page	Model CIMR-A□	Cooling Fan	Circulation Fan	Control Board Cooling Fan	Page
2A0004	–	–	–	4A0002	–	–	–	–
2A0006	–	–	–	4A0004	–	–	–	–
2A0010	–	–	–	4A0005	–	–	–	–
2A0012	–	–	–	4A0007	1	–	–	
2A0021	1	–		4A0009	1	–	–	
2A0030	2	–		4A0011	1	–	–	
2A0040	2	–		4A0018	2	–	–	
2A0056	2	–	*353*	4A0023	2	–	–	*353*
2A0069	2	–		4A0031	2	–	–	
2A0081	2	–		4A0038	2	–	–	
2A0110	2	–		4A0044	2	–	–	
2A0138	2	–	*355*	4A0058	2	–	–	
2A0169	2	–		4A0072	2	–	–	*355*
2A0211	2	–		4A0088	2	–	–	
2A0250	2	–		4A0103	2	–	–	*357*
2A0312	2	–	*359*	4A0139	2	–	–	
2A0360	3	1		4A0165	2	–	–	
2A0415	3	1		4A0208	2	–	–	
–	–	–	–	4A0250	3	–	–	*359*
–	–	–	–	4A0296	3	–	–	
–	–	–	–	4A0362	3	1	–	
–	–	–	–	4A0414	3	1	–	*363*
–	–	–	–	4A0515	3	2	2	
–	–	–	–	4A0675	3	2	2	*365*

上正科技有限公司
購買 維修 備手冊零組件
電話： 037-486333
Email: service@repairtw.com
Line id: @zzzz
www.repairtw.com

◆ Cooling Fan Component Names

WARNING! *Electrical Shock Hazard. Do not connect or disconnect wiring while the power is on. Failure to comply can result in serious personal injury. Before servicing the drive, disconnect all power to the equipment. The internal capacitor remains charged even after the power supply is turned off. After shutting off the power, wait for at least the amount of time specified on the drive before touching any components.*

CAUTION! *Burn Hazard. Do not touch a hot drive heatsink. Failure to comply could result in minor or moderate injury. Shut off the power to the drive when replacing the cooling fan. To prevent burns, wait at least 15 minutes and ensure the heatsink has cooled down.*

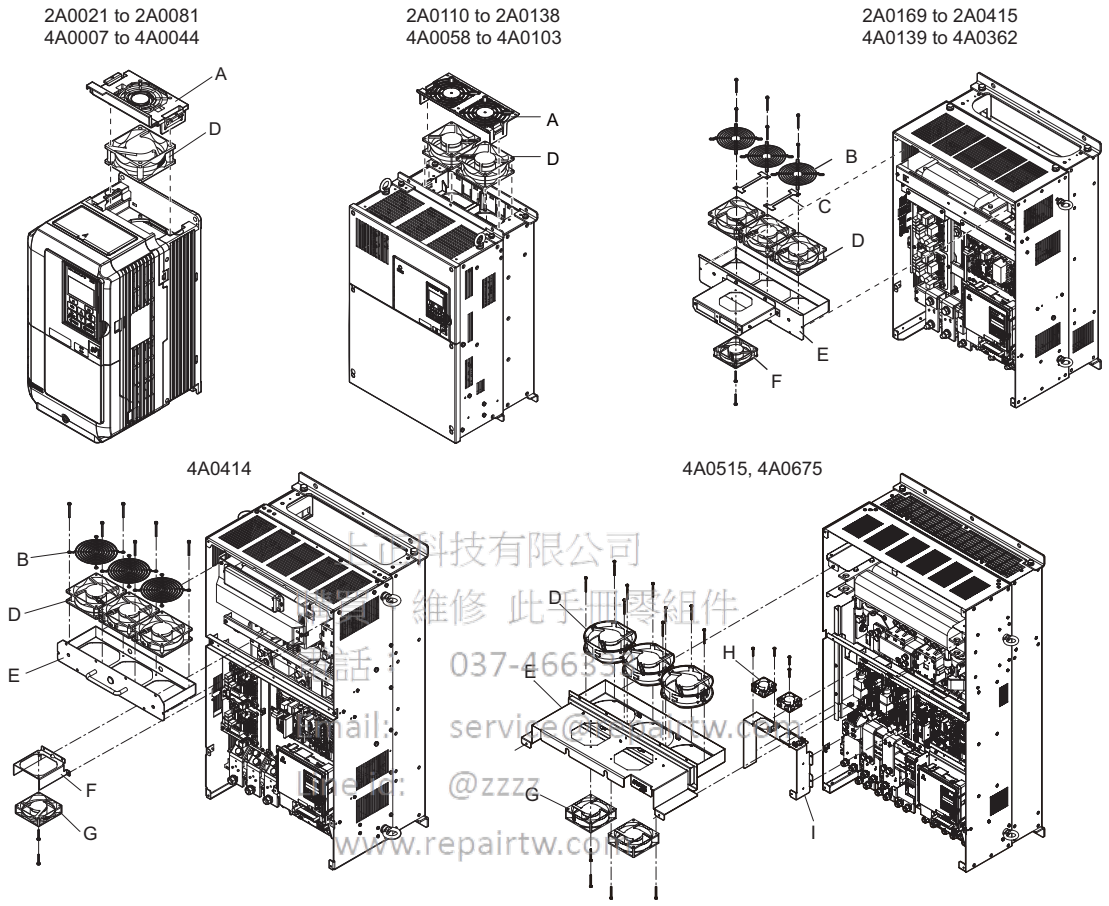

上正科技有限公司
維修 此手冊零組件
電話： 037-466350
Email: service@repairtw.com
Line id: @zzzz
www.repairtw.com

A – Fan Cover
B – Fan Guard
C – Cable Cover
D – Cooling Fan
E – Fan Unit Case
F – Circulation Fan Base
G – Circulation Fan
H – Circuit Board Cooling Fan
I – Circuit Board Cooling Fan Unit Case

Figure 7.1 Cooling Fan Component Names

◆ Cooling Fan Replacement: 2A0021 to 2A0081 and 4A0007 to 4A0044

WARNING! *Electrical Shock Hazard. Do not connect or disconnect wiring while the power is on. Failure to comply can result in serious personal injury. Before servicing the drive, disconnect all power to the equipment. The internal capacitor remains charged even after the power supply is turned off. After shutting off the power, wait for at least the amount of time specified on the drive before touching any components.*

CAUTION! *Burn Hazard. Do not touch a hot drive heatsink. Failure to comply could result in minor or moderate injury. Shut off the power to the drive when replacing the cooling fan. To prevent burns, wait at least 15 minutes and ensure the heatsink has cooled down.*

NOTICE: *Prevent Equipment Damage. Follow cooling fan and circulation fan replacement instructions. Improper fan replacement could result in damage to equipment. When installing the replacement fan into the drive, make sure the fan is facing upwards. To ensure maximum useful product life, replace all fans when performing maintenance.*

■ Removing the Cooling Fan

1. Depress the right and left sides of the fan cover hooks and pull upward. Remove the fan cover from the top of the drive.

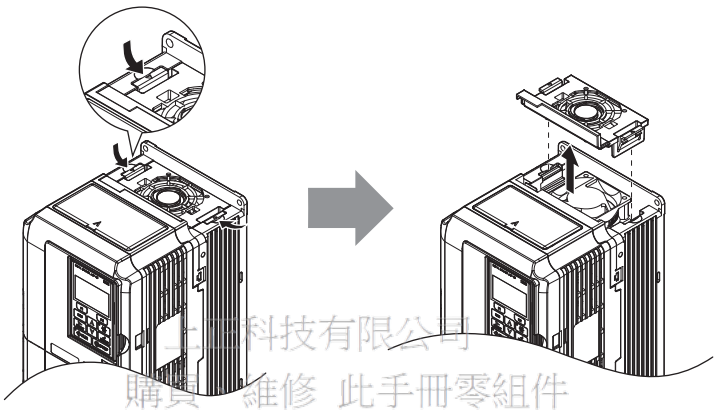

工控科技有限公司
購買 維修 此手冊零組件
電話： 037-466333
Email: service@repairtw.com
Line id: @zzzz
www.repairtw.com

Figure 7.2 Removing the Fan Cover: 2A0021 to 2A0081, 4A0007 to 4A0044

2. Remove the cooling fan cartridge. Disconnect the pluggable connector and remove the fan.

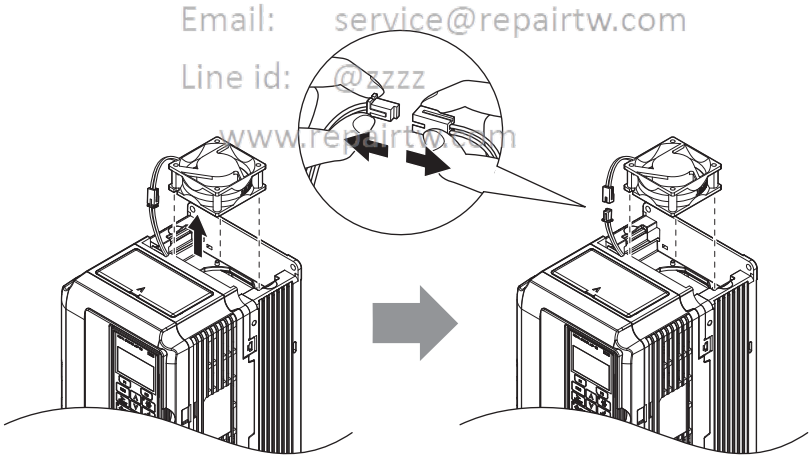

Figure 7.3 Removing the Cooling Fan: 2A0021 to 2A0081, 4A0007 to 4A0044

■ Installing the Cooling Fan

Reverse the procedure described above to reinstall the cooling fan.

1. Install the replacement fan into the drive, ensuring the alignment pins line up as shown in the figure below.

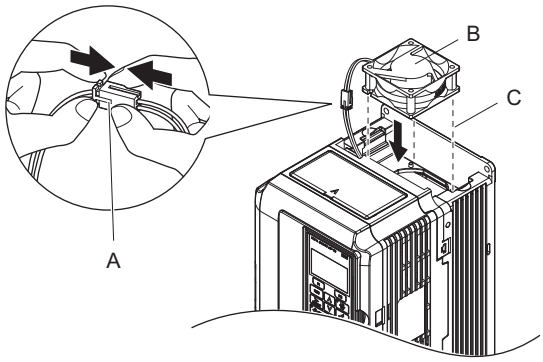

A – Push the connectors together so no space remains between them.
B – Label facing up
C – Make sure the alignment pins line up properly.

Figure 7.4 Installing the Cooling Fan: 2A0021 to 2A0081, 4A0007 to 4A0044

2. Make sure the power lines for the fan are properly connected, then place the cable back into the recess of the drive.

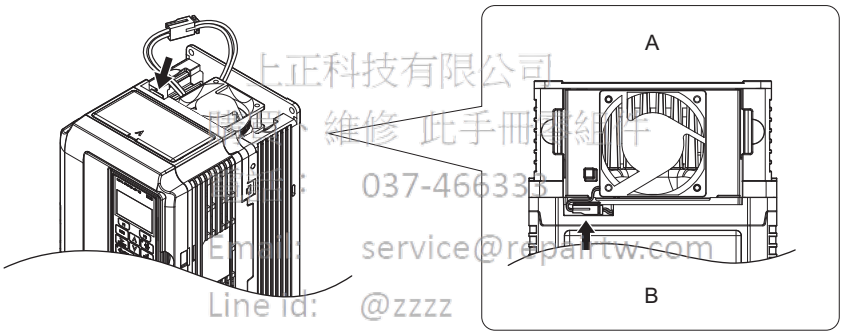

上正科技有限公司
維修 此手冊零組件
037-466333
service@repairtw.com
Line id: @zzzz
www.repairtw.com

A – Back **B – Front**

Figure 7.5 Cooling Fan Power Supply Connectors: 2A0021 to 2A0081, 4A0007 to 4A0044

3. While pressing in on the hooks on the left and right sides of the fan cover, guide the fan cover until it clicks back into place.

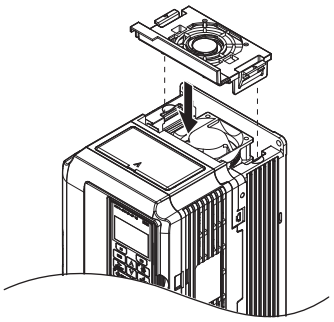

Figure 7.6 Reattach the Fan Cover: 2A0021 to 2A0081, 4A0007 to 4A0044

4. Turn the power supply back on and reset the cooling fan operation time for the Maintenance Monitor by setting o4-03 to 0.

◆ Cooling Fan Replacement: 2A0110 and 2A0138, 4A0058 and 4A0072

WARNING! *Electrical Shock Hazard. Do not connect or disconnect wiring while the power is on. Failure to comply can result in serious personal injury. Before servicing the drive, disconnect all power to the equipment. The internal capacitor remains charged even after the power supply is turned off. After shutting off the power, wait for at least the amount of time specified on the drive before touching any components.*

CAUTION! *Burn Hazard. Do not touch a hot drive heatsink. Failure to comply could result in minor or moderate injury. Shut off the power to the drive when replacing the cooling fan. To prevent burns, wait at least 15 minutes and ensure the heatsink has cooled down.*

NOTICE: *Prevent Equipment Damage. Follow cooling fan and circulation fan replacement instructions. Improper fan replacement could result in damage to equipment. When installing the replacement fan into the drive, make sure the fan is facing upwards. To ensure maximum useful product life, replace all fans when performing maintenance.*

■ Removing the Cooling Fan

1. While pressing in on the hooks located on the left and right sides of the fan cover, free the fan cover leading by lifting the back end first.

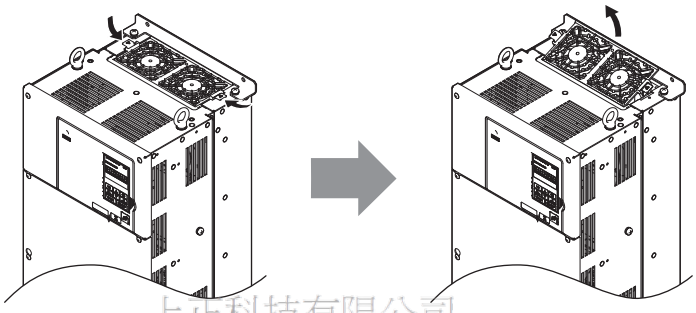

上正科技有限公司
購買、維修 此手冊零組件
電話： 037-466333
Email: service@repairtw.com
One-Stop Shop
www.repairtw.com

Figure 7.7 Removing the Cooling Fan Cover: 2A0110 and 2A0138, 4A0058 and 4A0072

2. Lift the fan cover out leading with the back end. Unplug the replay connector and free the fan cover from the drive.

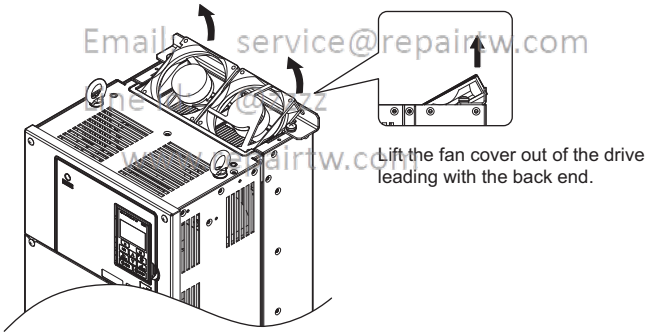

Figure 7.8 Removing the Cooling Fan: 2A0110 and 2A0138, 4A0058 and 4A0072

■ Installing the Cooling Fan

Reverse the procedure described above to reinstall the cooling fan.

1. Make sure the power lines for the fan are properly connected.
2. Place the power supply connectors and cable back into the recess of the drive.

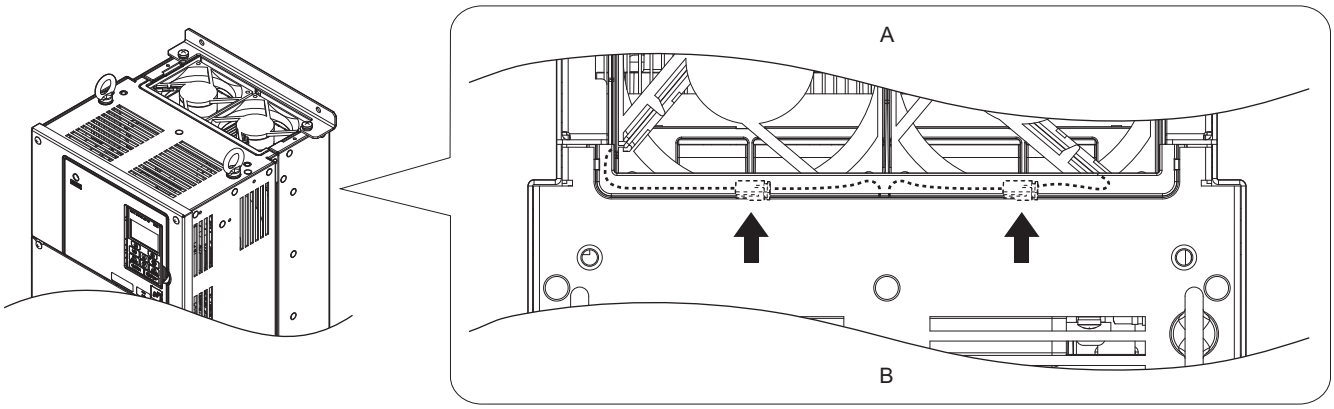

A – Back **B – Front**

Figure 7.9 Cooling Fan Power Supply Connectors: 2A0110 and 2A0138, 4A0058 and 4A0072

3. Install the replacement fan into the drive.

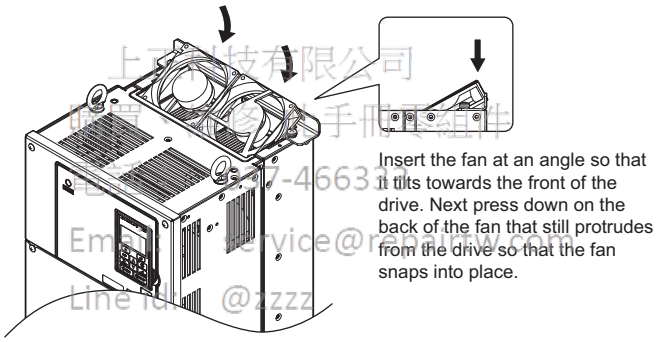

www.repairtw.com

Figure 7.10 Installing the Cooling Fan: 2A0110 and 2A0138, 4A0058 and 4A0072

4. Angle the fan cover so the back end tilts up. Slide the cover into the small opening towards the front of the drive, and then guide the entire fan cover into place.

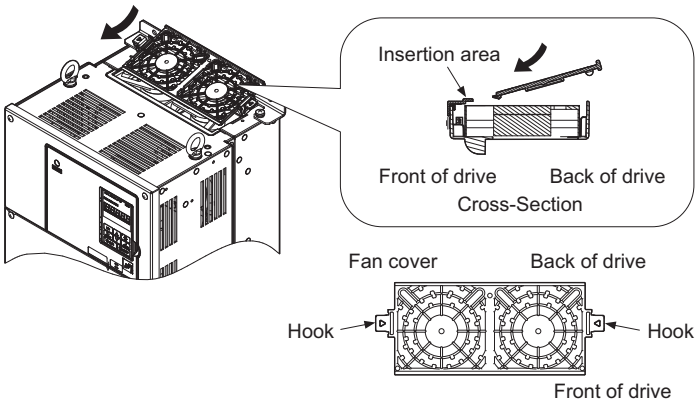

Figure 7.11 Reattach the Fan Cover: 2A0110 and 2A0138, 4A0058 and 4A0072

5. While pressing in on the hooks on the left and right sides of the fan cover, guide the fan cover until it clicks back into place.

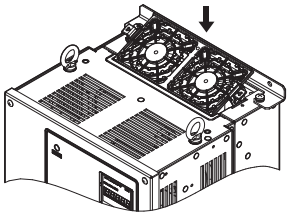

Figure 7.12 Reattach the Fan Cover: 2A0110 and 2A0138, 4A0058 to 4A0072

6. Turn the power supply back on and reset the cooling fan operation time for the Maintenance Monitor by setting o4-03 to 0.

◆ Cooling Fan Replacement: 4A0088 and 4A0103

WARNING! *Electrical Shock Hazard. Do not connect or disconnect wiring while the power is on. Failure to comply can result in serious personal injury. Before servicing the drive, disconnect all power to the equipment. The internal capacitor remains charged even after the power supply is turned off. After shutting off the power, wait for at least the amount of time specified on the drive before touching any components.*

CAUTION! *Burn Hazard. Do not touch a hot drive heatsink. Failure to comply could result in minor or moderate injury. Shut off the power to the drive when replacing the cooling fan. To prevent burns, wait at least 15 minutes and ensure the heatsink has cooled down.*

NOTICE: *Prevent Equipment Damage. Follow cooling fan and circulation fan replacement instructions. Improper fan replacement could result in damage to equipment. When installing the replacement fan into the drive, make sure the fan is facing upwards. To ensure maximum useful product life, replace all fans when performing maintenance.*

■ Removing the Cooling Fan

上正科技有限公司
購買、維修 此手冊零組件
電話： 037-466333
Email: service@repairtw.com
http://@zzzz
www.repairtw.com

1. While pressing in on the hooks located on the left and right sides of the fan cover, free the fan cover leading by lifting the back end first.

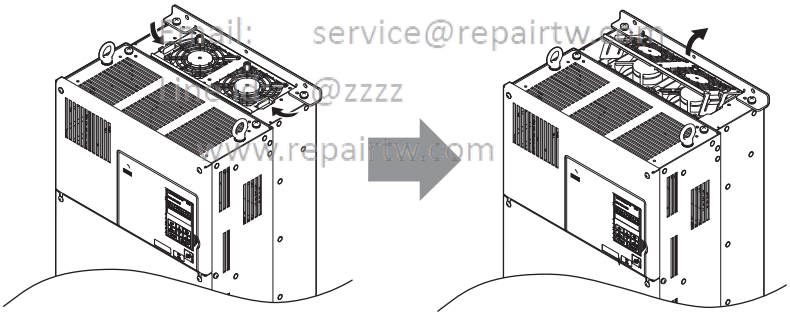

Figure 7.13 Removing the Cooling Fan Cover: 4A0088 and 4A0103

2. Lift the cooling fan directly up on the fan as shown below. Unplug the relay connector and free the fan from the drive.

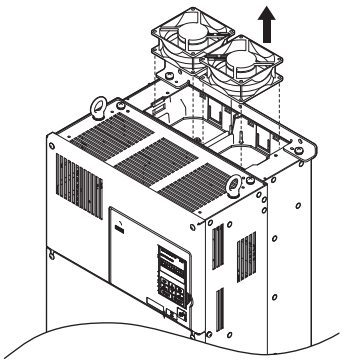

Figure 7.14 Removing the Cooling Fan: 4A0088 and 4A0103

■ Installing the Cooling Fan

Reverse the procedure described above to reinstall the cooling fan.

1. Install the replacement fan into the drive, ensuring the alignment pins line up as shown in the figure below.

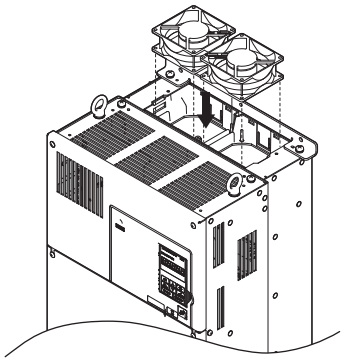

Figure 7.15 Installing the Cooling Fan: 4A0088 and 4A0103

2. Make sure the power lines for the fan are properly connected, then place the power supply connectors and cable back into the recess of the drive.

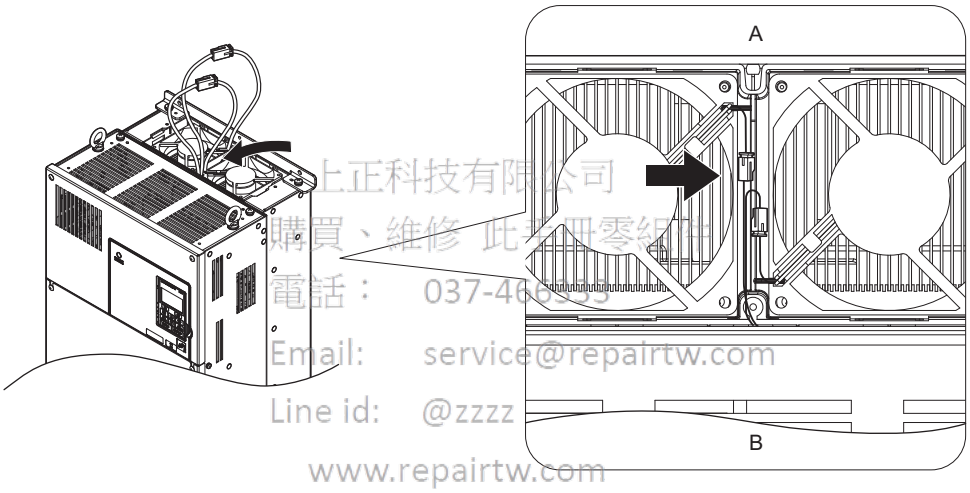

上正科技有限公司
購買、維修 此手冊零組件
電話： 037-466333
Email: service@repairtw.com
Line id: @zzzz
www.repairtw.com

A – Back **B – Front**

Figure 7.16 Cooling Fan Power Supply Connectors: 4A0088 and 4A0103

3. Angle the fan cover as shown and insert the connector tabs into the corresponding holes on the drive.

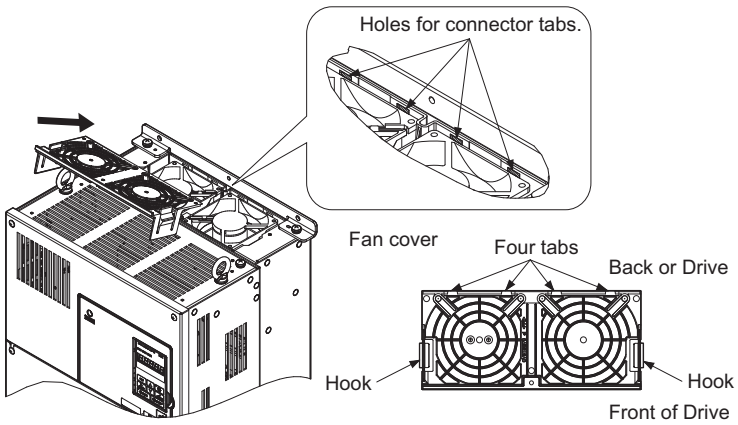

Figure 7.17 Reattach the Fan Cover: 4A0088 and 4A0103

4. While pressing in on the hooks on the left and right sides of the fan cover, guide the fan cover until it clicks back into place.

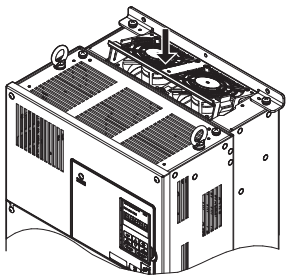

Figure 7.18 Reattach the Fan Cover: 4A0088 and 4A0103

5. Turn the power supply back on and reset the cooling fan operation time for the Maintenance Monitor by setting o4-03 to 0.

◆ Cooling Fan Replacement: 2A0169 to 2A0415, 4A0139 to 4A0362

WARNING! *Electrical Shock Hazard. Do not connect or disconnect wiring while the power is on. Failure to comply can result in serious personal injury. Before servicing the drive, disconnect all power to the equipment. The internal capacitor remains charged even after the power supply is turned off. After shutting off the power, wait for at least the amount of time specified on the drive before touching any components.*

CAUTION! *Burn Hazard. Do not touch a hot drive heatsink. Failure to comply could result in minor or moderate injury. Shut off the power to the drive when replacing the cooling fan. To prevent burns, wait at least 15 minutes and ensure the heatsink has cooled down.*

NOTICE: *Prevent Equipment Damage. Follow cooling fan and circulation fan replacement instructions. Improper fan replacement could result in damage to equipment. When installing the replacement fan into the drive, make sure the fan is facing upwards. To ensure maximum useful product life, replace all fans when performing maintenance.*

上正科技有限公司
購買、維修 此手冊零組件
電話： 037-466333
Email: service@repairtw.com
Line id: @zzzz
www.repairtw.com

■ Removing and Disassembling the Cooling Fan Unit

1. Remove the terminal cover and front cover.
2. Remove the fan connector (CN6). Remove the fan connector (CN6, CN7) in models 2A0360, 2A0415, and 4A0362.

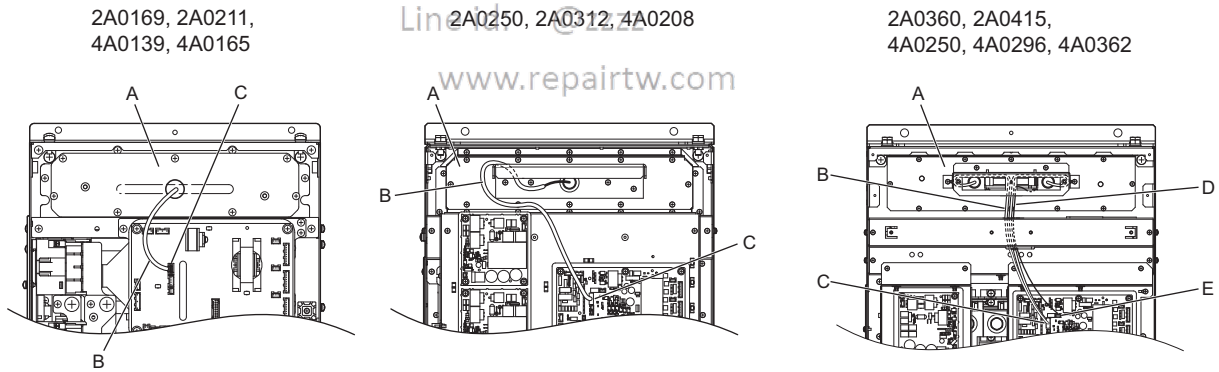

A – Fan Unit
B – Fan Relay Cable
C – Fan Connector (CN6)
D – Circulation Fan Relay Cable
E – Fan Connector (CN7)

Figure 7.19 Cooling Fan Replacement: Fan Unit and Connectors

3. Remove the screws holding the fan unit in place and slide the fan unit out of the drive.

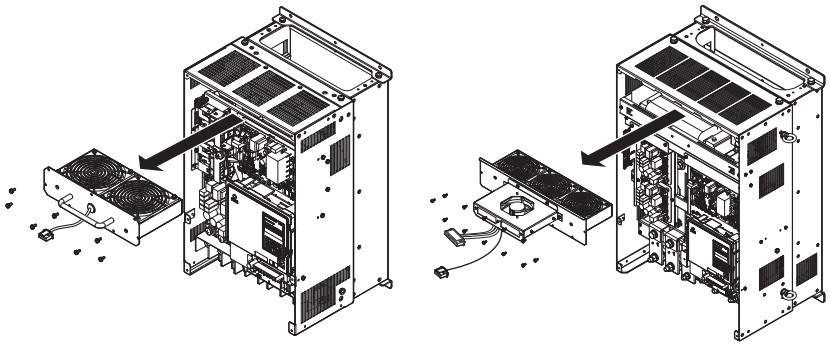

Figure 7.20 Removing the Fan Unit: 2A0169 to 2A0415, 4A0139 to 4A0362

4. Remove the fan guard and replace the cooling fans.

Note: Make sure the fan cable does not get pinched between parts when reassembling the fan unit.

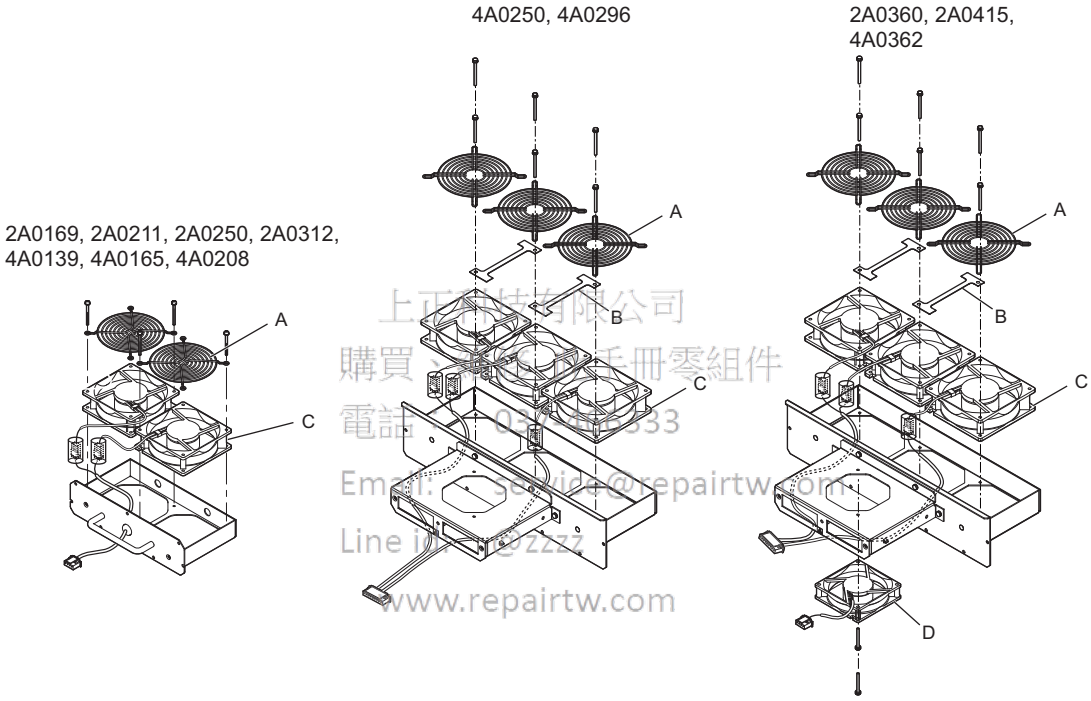

上正科技有限公司
購買、維修 PLC手冊零組件
電話：03-4666333
Email: service@repairtw.com
Line id: @zzzz
www.repairtw.com

A – Fan Guard **C – Cooling Fan**
B – Cable Cover **D – Circulation Fan**

Figure 7.21 Fan Unit Disassembly: 2A0169 to 2A0415, 4A0139 to 4A0362

■ Cooling Fan Wiring: 2A0169, 2A0211, 4A0139, and 4A0165

1. Position the protective tube so that the fan connector sits in the center of the protective tube.

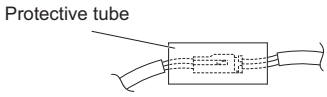

2. Place the fan connector covered by the tube as shown in the drawings below.

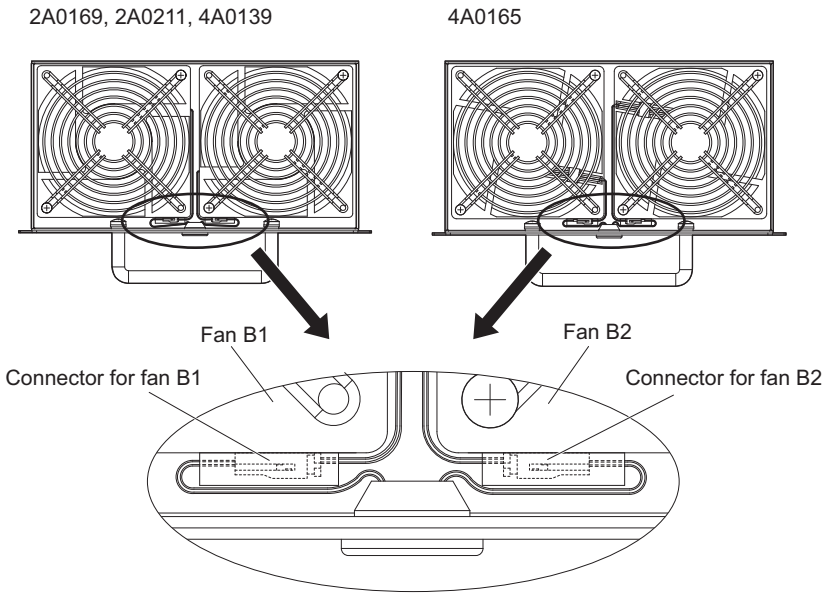

Figure 7.22 Cooling Fan Wiring: 2A0169, 2A0211, 4A0139 and 4A0165

3. Make sure that the protective tube does not stick out beyond the fan guard.

■ Cooling Fan Wiring: 2A0250, 2A0312 and 4A0208

1. Position the protective tube so that the fan connector sits in the center of the protective tube.

上正科技有限公司
購買、維修 此手冊零組件
電話： 037-466333
Email: service@repairtw.com
Line id: @zzzz
www.repairtw.com

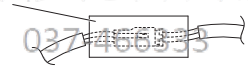

2. Place the connector for fan B2 before the B1 connector and guide the lead wire for fan B2 so that it is held in place by the cable hook.

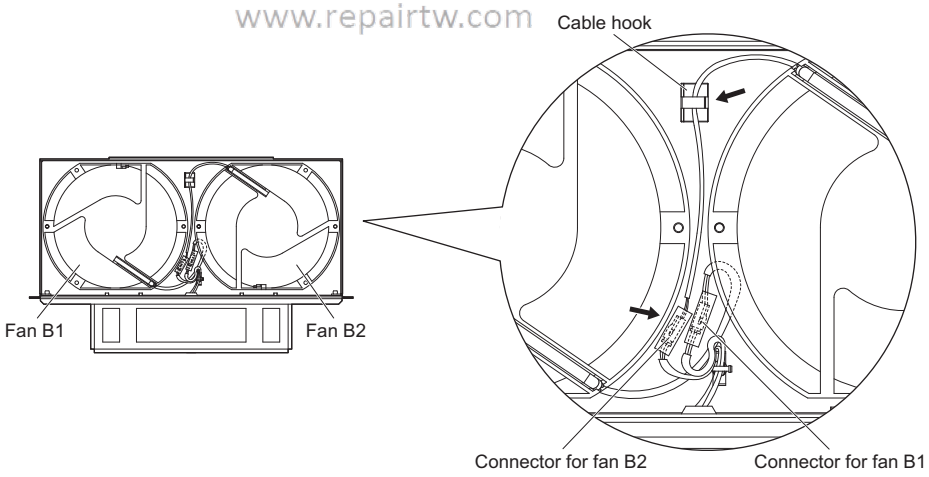

Figure 7.23 Cooling Fan Wiring: 2A0250, 2A0312 and 4A0208

3. Make sure that the protective tube does not stick out beyond the fan guard.

■ Cooling Fan Wiring: 2A0360, 2A0415, 4A0250 to 4A0362

1. Position the protective tube so that the fan connector sits in the center of the protective tube.

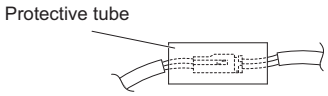

2. The fan connector for fan B2 should be placed in front of the fan B1 connector between fans B1 and B2.
3. The connector for fan B3 should be pressed in between fan B2 and B3.

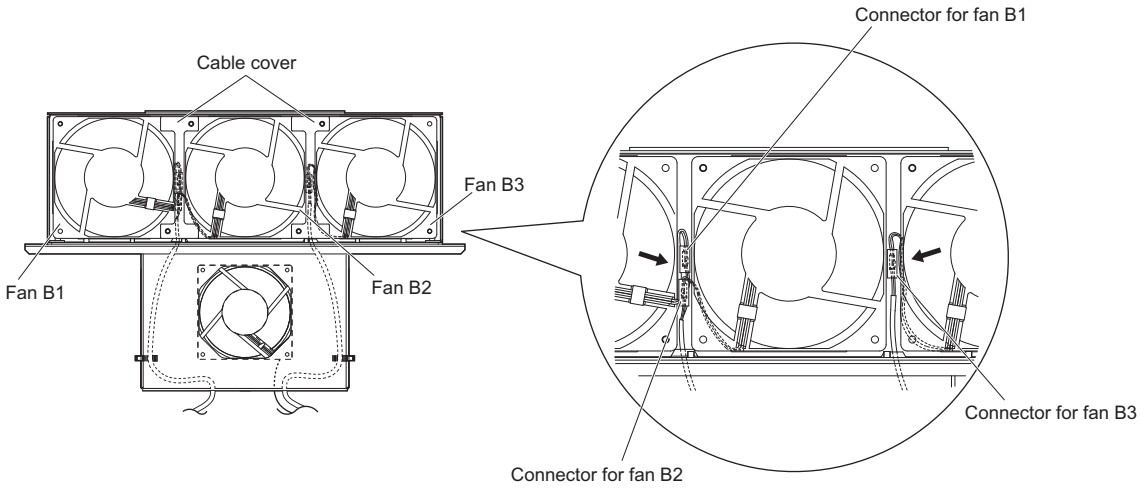

Figure 7.24 Cooling Fan Wiring: 2A0360, 2A0415, 4A0250 to 4A0362

上正科技有限公司
購買、維修 此手冊零組件
電話： 037-466333
Email: service@repairtw.com
Line id: @zzz
www.repairtw.com

4. Double check the relay connector to ensure that it is properly connected.
5. Reattach the cable cover to its original position and tighten the screws so that the fan guard holds the cable cover in place.

Note: Make sure the fan cable does not get pinched between parts when reassembling the fan unit.

■ Installing the Cooling Fan Unit

1. Reverse the procedure described above to reinstall the cooling fan unit.

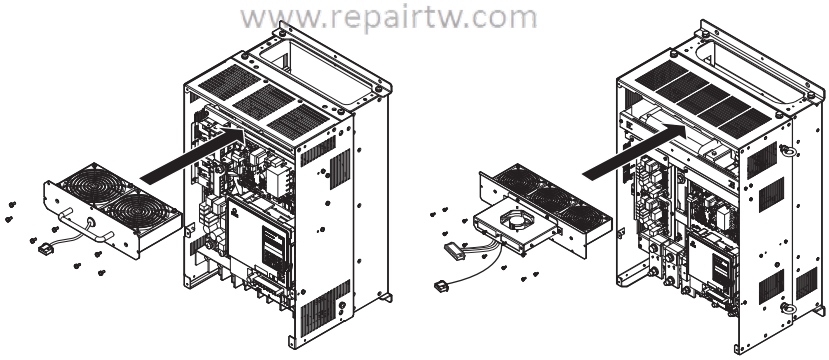

Figure 7.25 Installing the Cooling Fan Unit: 2A0169 to 2A0415, 4A0139 to 4A0362

2. Reattach the covers and digital operator.
3. Turn the power supply back on and reset the cooling fan operation time for the Maintenance Monitor by setting o4-03 to 0.

◆ Cooling Fan Replacement: 4A0414

WARNING! *Electrical Shock Hazard. Do not connect or disconnect wiring while the power is on. Failure to comply can result in serious personal injury. Before servicing the drive, disconnect all power to the equipment. The internal capacitor remains charged even after the power supply is turned off. After shutting off the power, wait for at least the amount of time specified on the drive before touching any components.*

CAUTION! *Burn Hazard. Do not touch a hot drive heatsink. Failure to comply could result in minor or moderate injury. Shut off the power to the drive when replacing the cooling fan. To prevent burns, wait at least 15 minutes and ensure the heatsink has cooled down.*

NOTICE: *Prevent Equipment Damage. Follow cooling fan and circulation fan replacement instructions. Improper fan replacement could result in damage to equipment. When installing the replacement fan into the drive, make sure the fan is facing upwards. To ensure maximum useful product life, replace all fans when performing maintenance.*

■ Removing and Disassembling the Cooling Fan Unit

1. Remove the terminal cover and front cover 1 and 2.
2. Remove the fan connector (CN6).

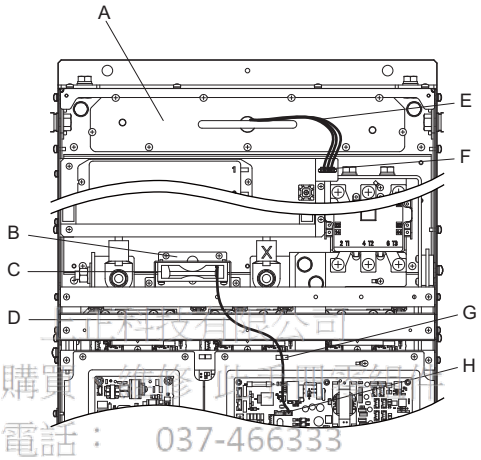

A – Fan Unit
B – Circulation Fan Unit
C – Circulation Fan
D – Circulation Fan Relay Cable
E – Fan Relay Cable
F – Fan Connector (CN6)
G – Hook
H – Fan Connector (CN7)

Figure 7.26 Component Names: 4A0414

3. Remove the circulation fan relay cable from the hook. Remove the fan connector (CN7).
4. Remove the screws holding the fan units in place and slide the fan units out of the drive.

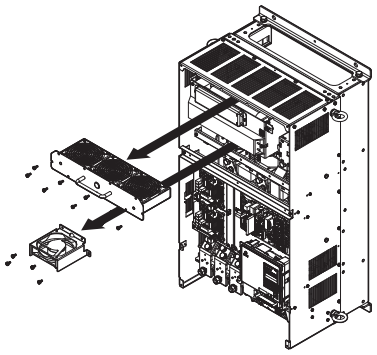

Figure 7.27 Removing the Fan Units: 4A0414

5. Remove the fan guard and circulation fan casing. Replace the cooling fans.

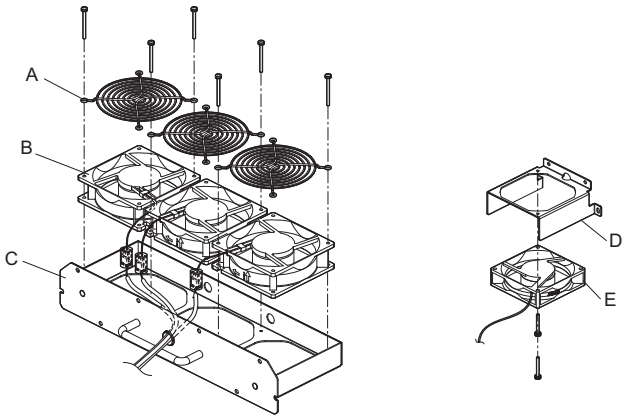

A – Fan Guard
B – Cooling Fan
C – Fan Unit Case
D – Circulation Fan Base
E – Circulation Fan

Figure 7.28 Fan Unit Disassembly: 4A0414

■ Cooling Fan Wiring

1. Position the protective tube so that the fan connector sits in the center of the protective tube.



上正科技有限公司
購買、維修、出租電腦組件
電話：037-466333
service@repairtw.com
@zzzz
www.repairtw.com

2. Place the fan connector covered by the tube as shown in the drawings below.

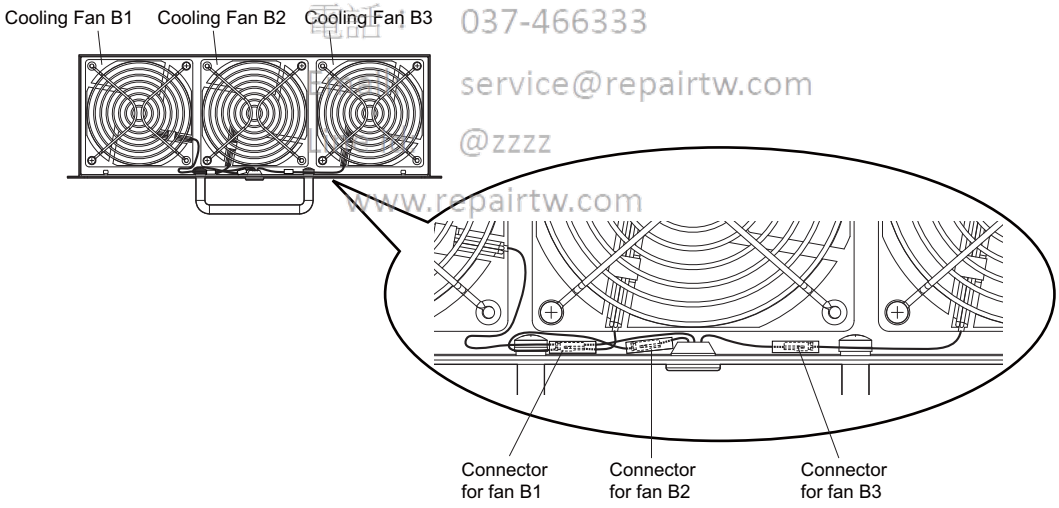

Figure 7.29 Cooling Fan Wiring: 4A0414

3. Double check the relay connector to ensure that it is properly connected.

■ Installing the Cooling Fan Unit

1. Reverse the procedure described above to reinstall the cooling fan unit.

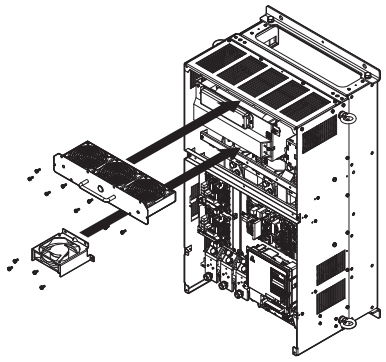

Figure 7.30 Installing the Cooling Fan Units: 4A0414

2. Reattach the covers and digital operator.
3. Turn the power supply back on and reset the cooling fan operation time for the Maintenance Monitor by setting o4-03 to 0.

◆ Cooling Fan Replacement: 4A0515 and 4A0675

WARNING! *Electrical Shock Hazard. Do not connect or disconnect wiring while the power is on. Failure to comply can result in serious personal injury. Before servicing the drive, disconnect all power to the equipment. The internal capacitor remains charged even after the power supply is turned off. After shutting off the power, wait for at least the amount of time specified on the drive before touching any components.*

CAUTION! *Burn Hazard. Do not touch a hot drive heatsink. Failure to comply could result in minor or moderate injury. Shut off the power to the drive when replacing the cooling fan. To prevent burns, wait at least 15 minutes and ensure the heatsink has cooled down.*

NOTICE: *Prevent Equipment Damage. Follow cooling fan and circulation fan replacement instructions. Improper fan replacement could result in damage to equipment. When installing the replacement fan into the drive, make sure the fan is facing upwards. To ensure maximum useful product life, replace all fans when performing maintenance.*

上平科技有限公司
購買、維修 此手冊零組件
Email: service@repairtw.com
Line id: @zzzz
www.repairtw.com

■ Removing and Disassembling the Cooling Fan Unit

1. Remove the terminal cover and front cover.
2. Remove the connectors for the cooling fan relay and the circuit board cooling fan.

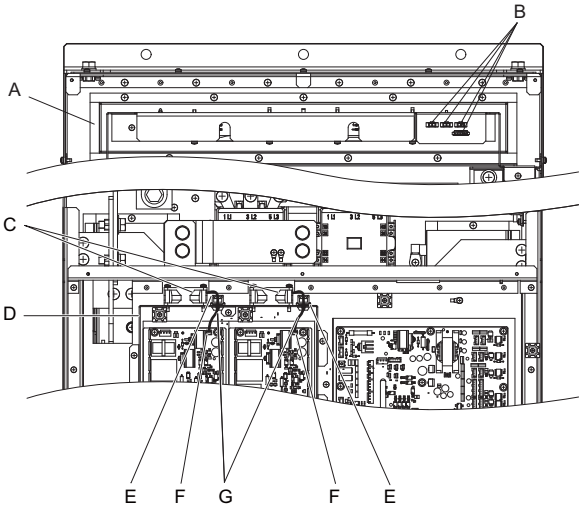

A – Fan Unit
B – Fan Relay Connector
C – Circuit Board Cooling Fan
D – Circuit Board Cooling Fan Case
E – Hook
F – Circuit Board Cooling Fan Connector
G – Circuit Board Cooling Fan Cable

Figure 7.31 Component Names: 4A0515 and 4A0675

3. Loosen the nine screws, then slide the panel that the screws held into place to the right.

Note: The fan unit can be removed simply by loosening these screws.

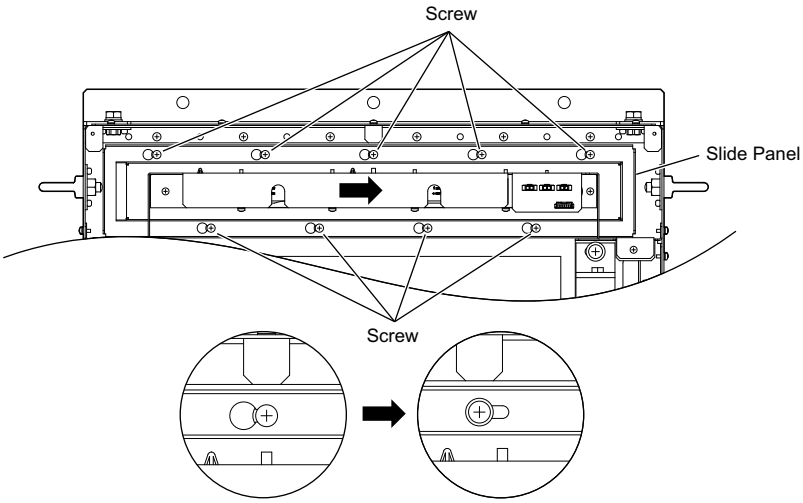

Figure 7.32 Removing the Fan Unit: 4A0515 and 4A0675

4. Remove the slide panel and fan unit along with the cooling fan unit for the circuit boards from the drive.

Note: Both the fan unit and slide panel should be removed at the same time.

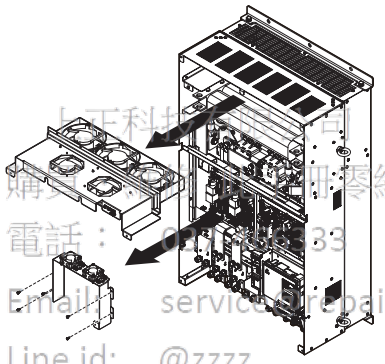

上正科技有限公司
購買、維修 此類型零組件
電話： 0[illegible]33
Email: service@repairtw.com
Line id: @zzzz
www.repairtw.com

Figure 7.33 Removing the Fan Units: 4A0515 and 4A0675

5. Replace the cooling fans.

Note: Make sure the fan cable does not get pinched between parts when reassembling the fan unit.

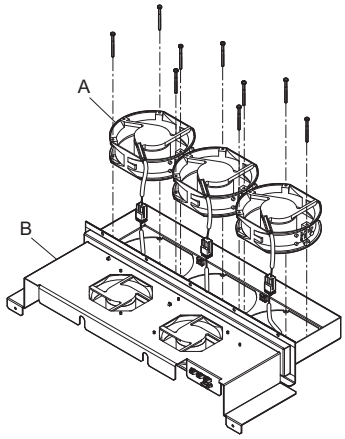

A – Cooling Fan **B – Cooling Fan Unit Case**

Figure 7.34 Fan Unit Disassembly: 4A0515 and 4A0675

6. Turn the fan unit over and replace the circulation fans.

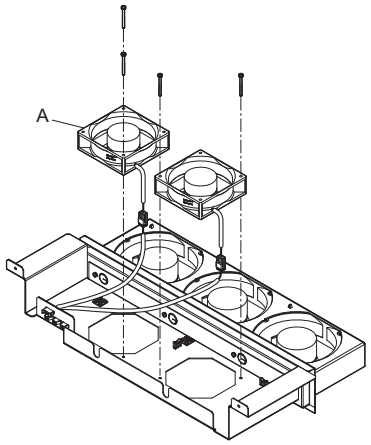

A – Circulation Fan

Figure 7.35 Fan Unit Disassembly: 4A0515 and 4A0675

7. Replace the cooling fans

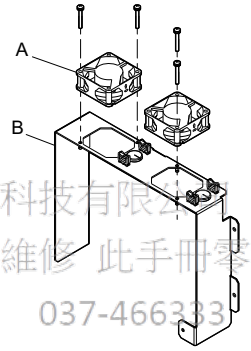

上正科技有限公司
購買、維修 此手冊零組件
電話： 037-466333
Email: service@repairtw.com
Line id: @222
www.repairtw.com

A – Circuit Board Cooling Fan **B – Circuit Board Cooling Fan Case**

Figure 7.36 Fan Unit Disassembly: 4A0515 and 4A0675

■ Cooling Fan Wiring

1. Place the cooling fan connectors and guide the lead wires so that they are held in place by the cable hooks.

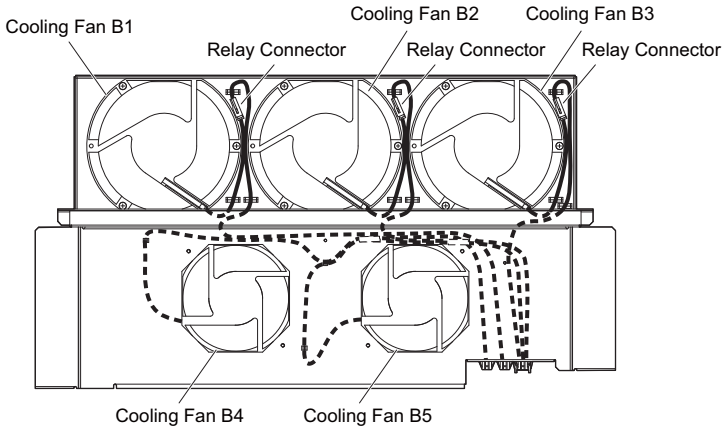

Figure 7.37 Cooling Fan Wiring: 4A0515 and 4A0675

2. Guide the lead wires so that they are held in place by the cable hooks and place the circulation fan connectors between the fan and fan unit.

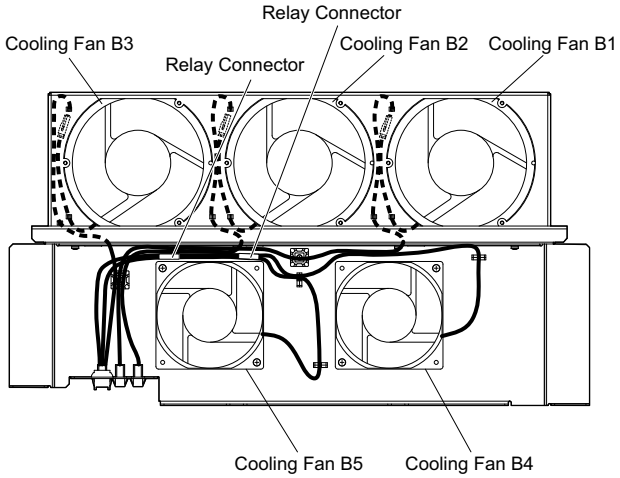

Figure 7.38 Cooling Fan Wiring: 4A0515 and 4A0675

3. Position the protective tube so that the fan connector sits in the center of the protective tube. (Only for circuit Board Cooling Fan)

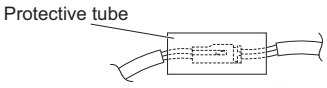

上正科技有限公司
購買、維修 此手冊零組件
電話： 037-466333
Email: service@repairtw.com
Line id: @zzzz
www.repairtw.com

4. Guide lead wires through the hooks provided so that the wires are held in place.

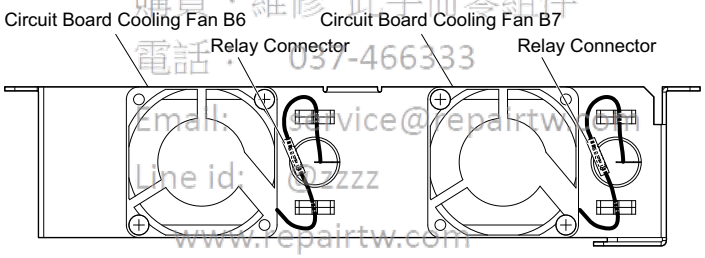

Figure 7.39 Cooling Fan Wiring: 4A0515 and 4A0675

5. Double check the relay connector to ensure that it is properly connected.

■ Installing the Cooling Fan Unit

1. Reverse the procedure described above to reinstall the cooling fan unit.

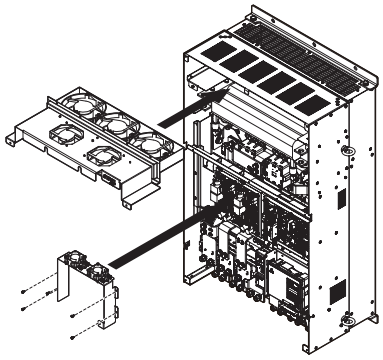

Figure 7.40 Installing the Cooling Fan Units: 4A0515 and 4A0675

2. Reattach the covers and digital operator.
3. Turn the power supply back on and reset the cooling fan operation time for the Maintenance Monitor by setting o4-03 to 0.

7.5 Drive Replacement

◆ Serviceable Parts

The drive contains some serviceable parts. The following parts can be replaced over the life span of the drive:

- Terminal board I/O PCBs
- Cooling fan(s)
- Front cover

Replace the drive if the main power circuitry is damaged. Contact your local Yaskawa representative before replacing parts if the drive is still under warranty. Yaskawa reserves the right to replace or repair the drive according to Yaskawa warranty policy.

◆ Terminal Board

The drive has a modular I/O terminal block that facilitates quick drive replacement. The terminal board contains on-board memory that stores all drive parameter settings and allows the parameters to be saved and transferred to the replacement drive. To transfer the terminal board, disconnect the terminal board from the damaged drive then reconnect it to the replacement drive. Once transferred, there is no need to manually reprogram the replacement drive.

Note: If the damaged drive and the new replacement drive are have different capacities, the data stored in the terminal board cannot be transferred to the new drive and an oPE01 error will appear on the display. The terminal board can still be used, but parameter setting from the old drive cannot be transferred. The replacement drive must be initialized and manually programmed.

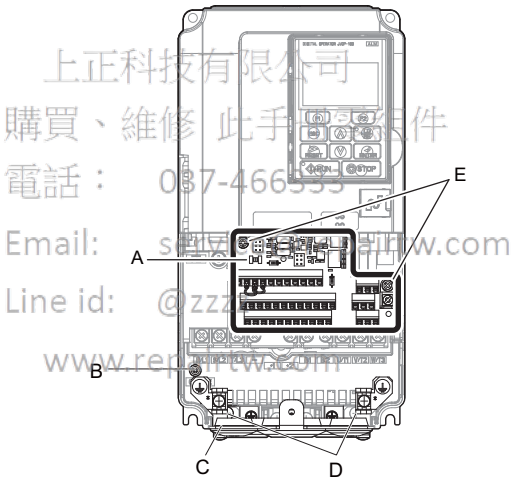

A – Removable terminal board
B – Charge LED
C – Bottom cover
D – Bottom cover screws
E – Terminal board locking screws

Figure 7.41 Terminal Board

◆ Replacing the Drive

WARNING! *Electrical Shock Hazard. Do not connect or disconnect wiring while the power is on. Failure to comply can result in serious personal injury. Before servicing the drive, disconnect all power to the equipment. The internal capacitor remains charged even after the power supply is turned off. After shutting off the power, wait for at least the amount of time specified on the drive before touching any components.*

WARNING! *Electrical Shock Hazard. Do not allow unqualified personnel to perform work on the drive. Failure to comply could result in serious injury. Installation, maintenance, inspection and servicing must be performed only by authorized personnel familiar with installation, adjustment and maintenance of AC drives.*

NOTICE: *Damage to Equipment. Observe proper electrostatic discharge procedures (ESD) when handling the drive and circuit boards. Failure to comply may result in ESD damage to the drive circuitry.*

The following procedure explains how to replace a drive. This section provides instructions for drive replacement only. To install option boards or other types of options, then refer to the specific manuals for those options.

NOTICE: *When transferring a braking transistor, braking resistor, or other type of option from a damaged drive to a new replacement drive, make sure they are working properly before reconnecting them to the new drive. Replace broken options to prevent immediate break down of the replacement drive.*

1. Remove the terminal cover.

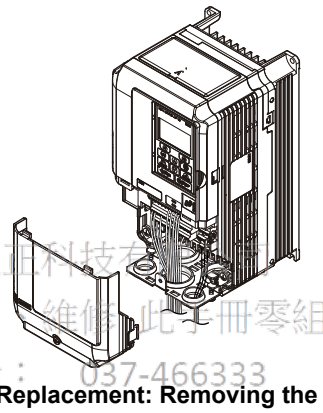

上旺科技有限公司
購買 維修此手冊零組件
電話： 037-466333
Email: service@repairtw.com
Line id: @zzzz
www.repairtw.com

Figure 7.42 Drive Replacement: Removing the Terminal Cover

2. Loosen the screws holding the terminal board in place. Take out the screw securing the bottom cover and remove the bottom cover from the drive.

Note: Drives set up for compliance with IP00 do not have a bottom cover.

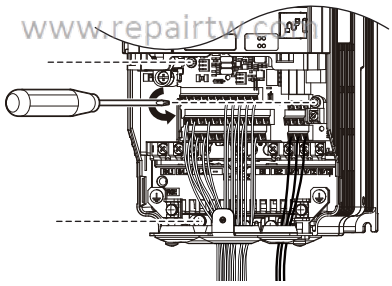

Figure 7.43 Drive Replacement: Removing the Terminal Board

3. Slide the terminal board as illustrated by the arrows, and remove it from the drive along with the bottom cover.

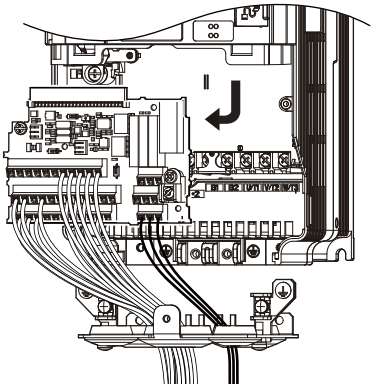

Figure 7.44 Drive Replacement: Remove the Terminal Board

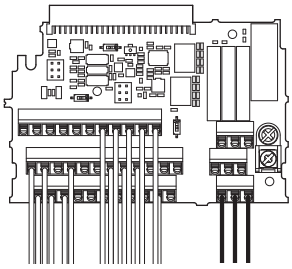

Figure 7.45 Drive Replacement:
Removable Terminal Board Disconnected from the Drive

4. Disconnect all option cards and options. Make sure they are intact before reusing them.
5. Replace the drive and wire the main circuit.

■ Installing the Drive

1. Once the main circuit has been wired, connect the terminal block to the drive as shown in ***Figure 7.46***. Use the installation screw to fasten the terminal block into place.

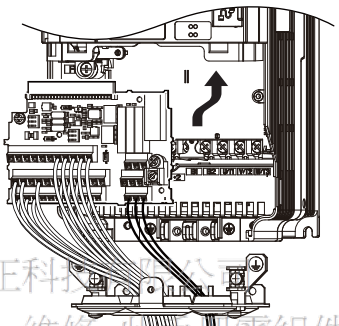

上正科技有限公司
購買、維修 此手冊零組件
電話：037-466320
Email: service@repairtw.com
Line id: @zzzz
www.repairtw.com

Figure 7.46 Drive Replacement: Installing the Terminal Board

2. Reconnect all options to the new drive in the same way they were installed in the old drive. Connect option boards to the same option ports in the new drive that were used in the old drive.
3. Put the terminal cover back into its original place.
4. When the power to the drive is first switched on, all parameter settings are transferred from the terminal board into the drive memory. Should an oPE04 error occur, load the parameter settings that have been saved on the terminal board onto the new drive by setting parameter A1-03 to 5550. Reset timers used for the Maintenance Monitor function by setting parameters o4-01 through o4-12 back to 0, and parameter o4-13 to 1.

上正科技有限公司
購買、維修 此手冊零組件
電話： 037-466333
Email: service@repairtw.com
Line id: @zzzz
www.repairtw.com

8

Peripheral Devices & Options

This chapter explains the installation of peripheral devices and options available for the drive.

8.1 SECTION SAFETY 374
8.2 DRIVE OPTIONS AND PERIPHERAL DEVICES 375
8.3 CONNECTING PERIPHERAL DEVICES 376
8.4 OPTION CARD INSTALLATION 377
8.5 INSTALLING PERIPHERAL DEVICES 379

上正科技有限公司
購買、維修 此手冊零組件
電話： 037-466333
Email: service@repairtw.com
Line id: @zzzz
www.repairtw.com

8.1 Section Safety

⚠ DANGER

Electrical Shock Hazard

Do not connect or disconnect wiring while the power is on.

Failure to comply will result in death or serious injury.

The internal capacitor remains charged even after the power supply is turned off. After shutting off the power, wait for at least the amount of time specified on the drive before touching any components.

⚠ WARNING

Electrical Shock Hazard

Do not operate equipment with covers removed.

Failure to comply could result in death or serious injury.

The diagrams in this section may show drives without covers or safety shields to show details. Be sure to reinstall covers or shields before operating the drives and run the drives according to the instructions described in this manual.

Do not remove covers or touch circuit boards while the power is on.

Failure to comply could result in death or serious injury.

上正科技有限公司
購買、維修 此手冊零組件
電話： 037-466333
Email: service@repairtw.com
Line Id: @zzzz
www.repairtw.com

Do not allow unqualified personnel to perform work on the drive.

Failure to comply could result in death or serious injury.

Installation, maintenance, inspection and servicing must be performed only by authorized personnel familiar with installation, adjustment and maintenance of AC drives.

Do not perform work on the drive while wearing loose clothing, jewelry or without eye protection.

Failure to comply could result in death or serious injury.

Remove all metal objects such as watches and rings, secure loose clothing and wear eye protection before beginning work on the drive.

Always ground the motor-side grounding terminal.

Improper equipment grounding could result in death or serious injury by contacting the motor case.

Fire Hazard

Tighten all terminal screws to the specified tightening torque.

Loose electrical connections could result in death or serious injury by fire due to overheating of electrical connections.

NOTICE

Observe proper electrostatic discharge procedures (ESD) when handling the drive and circuit boards.

Failure to comply may result in ESD damage to the drive circuitry.

Never connect or disconnect the motor from the drive while the drive is outputting voltage.

Improper equipment sequencing could result in damage to the drive.

8.2 Drive Options and Peripheral Devices

The following table of peripheral devices lists the names of the various accessories and options available for Yaskawa drives. Contact Yaskawa or your Yaskawa agent to order these peripheral devices.

- **Peripheral Device Selection**: Refer to the Yaskawa catalog for selection and part numbers.
- **Peripheral Device Installation**: Refer to the corresponding option manual for installation instructions.

Option	Model Number	Description
Power Options		
DC Reactor	-	Improves the power factor by suppressing harmonic distortion from the power supply.
AC Reactor	-	Protects the drive when operating from a large power supply and improves the power factor by suppressing harmonic distortion. Highly recommended for power supplies that exceed 600 kVA.
Braking Resistor	ERF-150WJ Series	For use with systems that require dynamic braking with up to 3% ED. If higher ED is required, use a Braking Resistor Unit.
Braking Unit	CDBR Series	External braking transistor
Input / Output Option Cards		
Analog Input	AI-A3	Allows high precision, high resolution analog reference input. Input channels: 3 Voltage input: -10 to 10 Vdc (20 kΩ), 13 bit signed Current input: 4 to 20 mA or 0 to 20 mA (250 kΩ), 12 bit
Analog Monitor	AO-A3	Provides extra multi-function analog output terminals. Output channels: 2 Output voltage: -10 to 10 V, 11 bit (signed)
Digital Input	DI-A3	Used to set the frequency reference by digital inputs Input channels: 18 (including SET signal and SIGN signal) Input signal type: BCD 16 bit (4 digit), 12 bit (3 digit), 8 bit (2 digit) Input signal: 24 Vdc, 8 mA
Digital Output	DO-A3	Provides extra insulated multi-function digital outputs. Photocoupler relays: 6 (48 V, up to 50 mA) Contact relays: 2 (250 Vac/up to 1 A, 30 Vdc/up to 1 A)
Motor Speed Feedback Option Cards		
Complementary PG	PG-B3	For speed feedback input by connecting a motor encoder Input: 3 track (can be used with one or two tracks), for HTL encoder connection, 50 kHz max Output: 3 track, open collector Encoder power supply: 12 V, max current 200 mA
Line Driver PG	PG-X3	For speed feedback input by connecting a motor encoder Input: 3 track (can be used with one or two tracks), line driver, 300 kHz max Output: 3 track, line driver Encoder power supply: 5 V or 12 V, max current 200 mA
Communication Options Cards		
PROFIBUS-DP	SI-P3	Connects to a PROFIBUS-DP network.
CC-Link	SI-C3	Connects to a CC-Link network
DeviceNet	SI-N3	Connects to a DeviceNet network
CANopen	SI-S3	Connects to a CANopen network
MECHATROLINK-II	SI-T3	Connects to a MECHATROLINK-II network
Interface Options		
LED Operator	JVOP-182	5-digits LED operator; max. cable length for remote usage: 3 m
Remote Operator Cable	WV001/WV003	Extension cable (1 m or 3 m) to connect the digital operator for remote operation RJ-45, 8 pin straight through, UTP CAT5e cable
USB Copy Unit	JVOP-181	Allows the user to copy and verify parameter settings between drives. Can also be used as an adapter to connect the drive to the USB port on a PC.
Mechanical Options		
Attachment for External Heatsink	EZZ020786	Installation kit for mounting the drive with the heatsink outside of the panel (Side-by-Side mounting possible)
NEMA 1 Kit	EZZ020787	Parts to make the drive conform to NEMA Type 1 enclosure requirements
Installation Support Set A	EZZ020642A	For installing the digital operator keypad on the outside of an enclosure panel that houses the drive. Also refer to *Digital Operator Remote Installation on page 43*.
Installation Support Set B	EZZ020642B	
Others		
24 V Power Supply	PS-A10L, PS-A10H	Option to supply the drive controller with 24 Vdc power during main power loss
PC Software Tools		
DriveWizard Plus	Contact Yaskawa	PC tool for drive setup and parameter management
DriveWorksEZ	Contact Yaskawa	PC tool for enhanced programming of the drive

上正科技有限公司
購買、維修 此手冊零組件
電話： 037-466333
Email: service@repairtw.com
Line id: @zzzz
www.repairtw.com

8.3 Connecting Peripheral Devices

Figure 8.1 illustrates how to configure the drive and motor to operate with various peripheral devices.

- For more detailed instructions on how to install each device shown below, refer to the specific manual for that device.

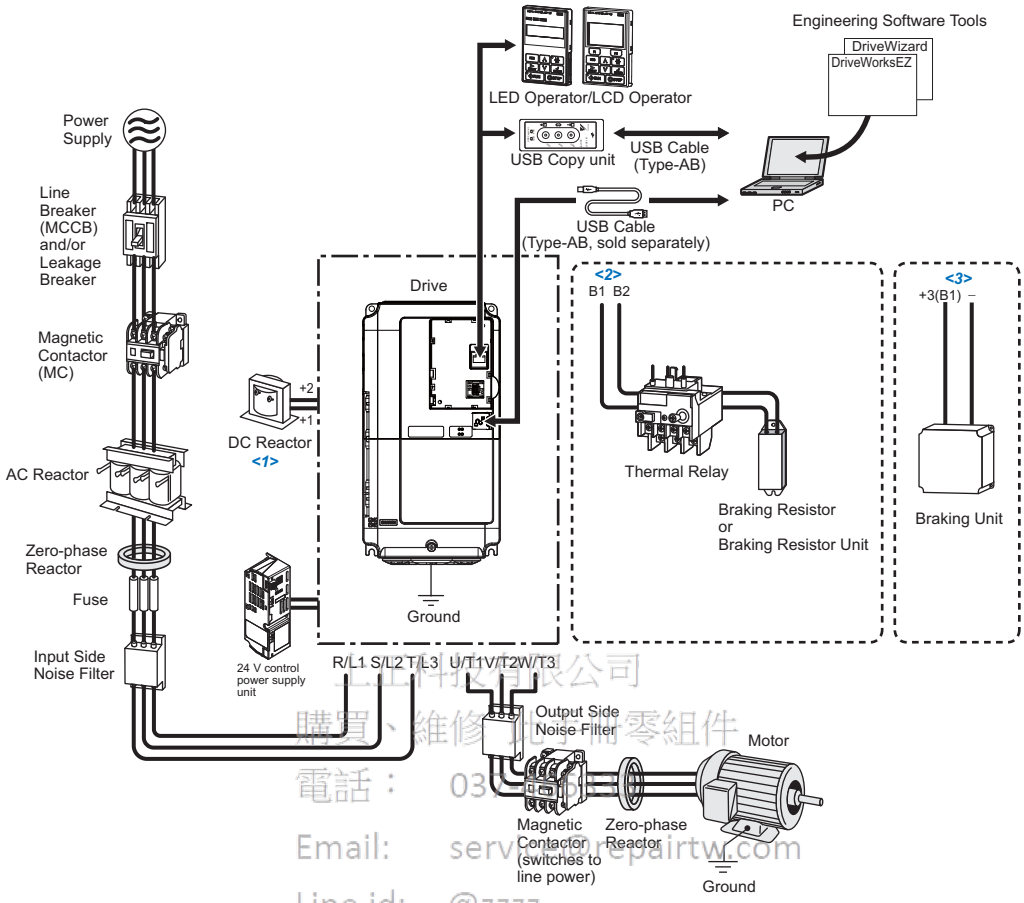

Figure 8.1 Connecting Peripheral Devices

購買、維修 此手冊零組件
電話： 03
Email: service@repairtw.com
Line id: @zzzz
www.repairtw.com

<1> Terminals +1 and +2 for connecting a DC choke are available only in units CIMR-A☐2A0004 to 0081 and CIMR-A☐40002 to 0044. Drives above have built in DC chokes.
<2> Terminals B1 and B2 for connecting a braking resistor are available only in units CIMR-A☐2A0004 to 0138 and CIMR-A☐40002 to 0072.
<3> When using an external braking chopper in drives from CIMR-A☐2A0004 to 0138 and CIMR-A☐40002 to 0072 connect the chopper to drive terminals B1 and -. When using larger drives connect the chopper to terminals +3 and -.

8.4 Option Card Installation

This section provides instructions on installing the option cards listed in .

◆ Installing Option Cards

Table 8.1 below lists the number of option cards that can be connected to the drive and the drive ports for connecting those option cards.

Table 8.1 Option Card Installation

Option Card	Port/Connector	Number of Cards Possible
SI-C3, SI-N3, SI-P3, SI-S3, SI-T3, AI-A3, DI-A3 <1>	CN5-A	1
PG-B3, PG-X3	CN5-B, C	2 <2>
DO-A3, AO-A3	CN5-A, B, C	1

<1> If installed to CN5-B or CN5-C, AI-A3 and DI-A3 cannot be used to set the frequency reference, but the input status can still be viewed using U1-21, U1-22, U1-23 (for AI-A3), and U1-17 (for DI-A3).
<2> If only one PG option card is connected to the drive, use the CN5-C connector. If two PG option cards are connected, use both CN5-B and CN5-C.

◆ Installation Procedure

WARNING! *Electrical Shock Hazard. Do not allow unqualified personnel to perform work on the drive. Failure to comply could result in death or serious injury. Maintenance, inspection, and replacement of parts must be performed only by authorized personnel familiar with installation, adjustment and maintenance of AC drives and Option Cards.*

NOTICE: *Damage to Equipment. Observe proper electrostatic discharge procedures (ESD) when handling the option card, drive, and circuit boards. Failure to comply may result in ESD damage to circuitry.*

NOTICE: *Damage to Equipment. Tighten all terminal screws to the specified tightening torque. Failure to comply may cause the application to operate incorrectly or damage the drive.*

上正科技有限公司
購買、維修 此手冊零組件
電話： 037-466333
E-mail: service@repairtw.com
Line ID: @222
www.repairtw.com

Use the procedure described below when installing option cards to the drive.

1. Shut off power to the drive, wait the appropriate amount of time for voltage to dissipate, then remove the operator and front cover. Refer to *Digital Operator and Front Cover on page 61*
2. Insert the CN5 connector on the option card into the matching CN5 connector on the drive, then fasten it into place using one of the screws included with the option card.

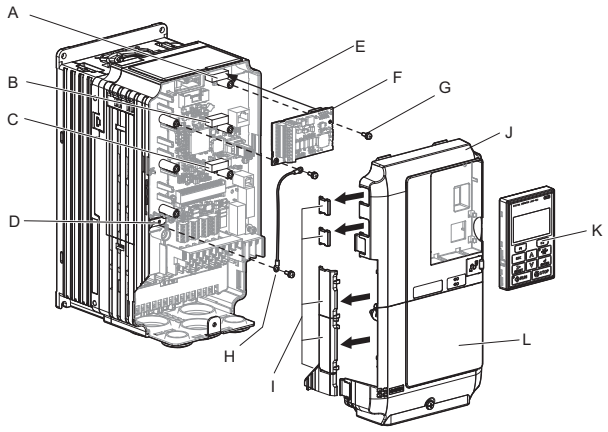

A – Connector CN5-C
B – Connector CN5-B
C – Connector CN5-A
D – Drive grounding terminal (FE)
E – Insert connector CN5 here
F – Option card
G – Mounting screw
H – Lead line
I – Use wire cutters to create an opening for cable lines
J – Front cover
K – Digital operator
L – Terminal cover

Figure 8.2 Installing an Option Card

3. Connect one of the lead lines using one of the screws to the ground terminal.
Some option cards come with several different lead lines for connecting the card to the drive. Select the lead line with the most appropriate length.

Note: There are only two screw holes on the drive for ground terminals. If three option cards are connected, two of the lead lines will need to share the same ground terminal.

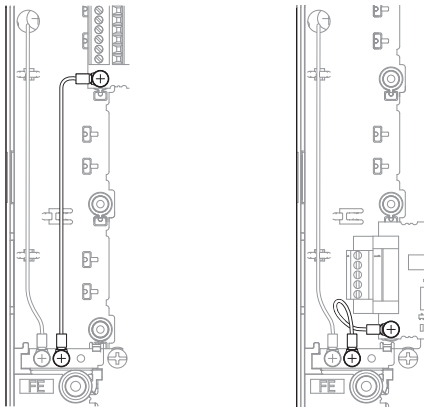

Figure 8.3 Connecting the Ground Terminal

4. Wire the option card to the terminal block on the option card.
For wiring instructions, refer to the manual delivered with the option card.
When installing option cards to drive models CIMR-A□2A0004 through 0040 and to models CIMR-A□4A0002 through 0023, the cables connected to the option might need to be routed through the front cover to the outside. In this case, cut out the perforated openings on the left side of the front cover. Make sure no sharp edges are left that may damage the cable.
Models CIMR-A□2A0056 through 2A0415 and 4A0031 through 0675 have enough space to keep all wiring inside the unit.

上正科技有限公司
購買、維修 此手冊零組件
電話： 037-466333
Email: service@repairtw.com
Line id: @zzzz
www.repairtw.com

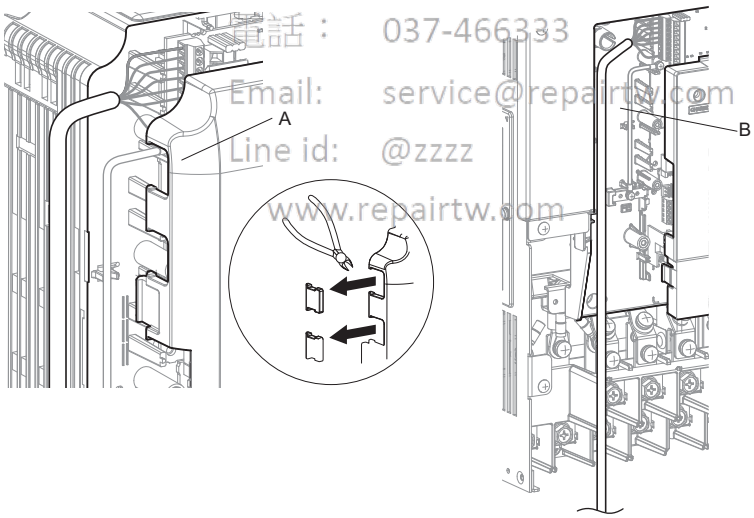

A – Cable through hole (CIMR-A□2A0004 to 0040, 4A0002 to 0023)

B – Space for wiring (CIMR-A□2A0056 to 0415, 4A0031 to 0675)

Figure 8.4 Wiring Space

5. Place the front cover and digital operator back onto the drive.

Note: **1.** Leave enough space when wiring so that the front cover can be easily reattached. Make sure no wires get caught between the front cover and the drive.
2. Any exposed wiring will void the wall-mount enclosure rating.

8.5 Installing Peripheral Devices

This section describes the proper steps and precautions to take when installing or connecting various peripheral devices to the drive.

NOTICE: *Use a class 2 power supply (UL standard) when connecting to the control terminals. Improper application of peripheral devices could result in drive performance degradation due to improper power supply.*

◆ Dynamic Braking Options

Dynamic braking (DB) helps bring the motor to a smooth and rapid stop when working with high inertia loads. As the drive lowers the frequency of a motor moving a high inertia load, regeneration occurs. This can cause an overvoltage situation when the regenerative energy flows back into the DC bus capacitors. A braking resistor prevents these overvoltage faults.

NOTICE: *Do not allow unqualified personnel to use the product. Failure to comply could result in damage to the drive or braking circuit. Carefully review the braking resistor instruction manual when connecting a braking resistor option to the drive.*

Note:
1. The braking circuit must be sized properly in order to dissipate the power required to decelerate the load in the desired time. Ensure that the braking circuit can dissipate the energy for the set deceleration time prior to running the drive.
2. Disable the drive's internal braking transistor protection by setting L8-55 = 0 when using braking resistor options.

WARNING! *Fire Hazard. The braking resistor connection terminals are B1 and B2. Do not connect a braking resistor directly to any other terminals. Improper wiring connections could result in death or serious injury by fire. Failure to comply may result in damage to the braking circuit or drive.*

NOTICE: *Connect braking resistors to the drive as shown in the I/O wiring examples. Improperly wiring braking circuits could result in damage to the drive or equipment.*

■ Installing a Braking Resistor: ERF type

上正科技有限公司
購買、維修 此手冊零組件
電話： 037-466333
Email: service@repairtw.com
Line id: @zzzz
www.repairtw.com

An ERF type braking resistors provides dynamic braking capability with up to 3% ED. It can be directly connected to the drives B1 and B2 terminals like shown in ***Figure 8.5***.

Enable the drive's braking resistor overload protection by setting L8-01 = 1 when using ERF type resistors.

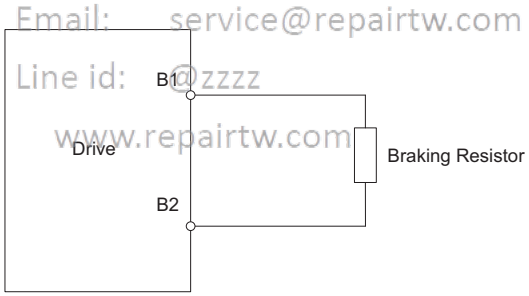

Figure 8.5 Connecting a Braking Resistor: ERF Type

■ Installing a Braking Resistor Unit: LKEB type

LKEB type braking resistors provide dynamic braking capability with up to 10% ED. They can be directly connected to the drives B1 and B2 terminals as shown in ***Figure 8.6***. The LKEB unit has a thermal overload contact that should be utilized in order to switch off the drive in case braking resistor overheat occurs.

As the drives internal braking resistor overload protection cannot protect LKEB resistors, disable this function by setting L8-01 to 0 and L8-55 to 0.

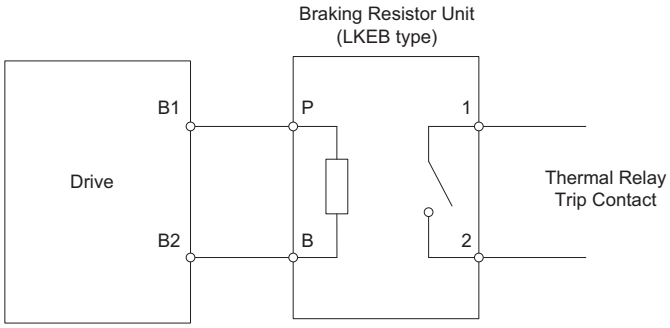

Figure 8.6 Connecting a Braking Resistor Unit: LKEB Type (CIMR-A□2A0004 to 0138, 4A0002 to 0072)

■ Installing Other Types of Braking Resistors

When installing braking resistors other than the ERF or LKEB types, make sure that the drive internal braking transistor will not be overloaded with the required duty cycle and the selected resistance value. Use a resistor that is equipped with a thermal overload relay contact, and utilize this contact to switch off the drive in case of braking resistor overheat.

■ Braking Resistor Overload Protection

If using a braking resistor option, a sequence such as the one shown in ***Figure 8.7*** should be set up to interrupt the power supply in case the braking resistor overheats.

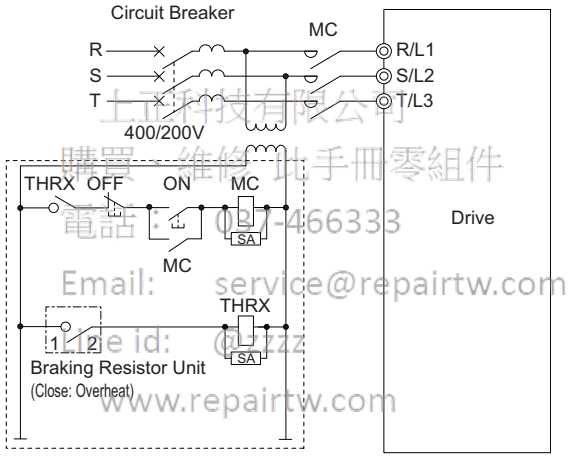

上正科技有限公司
購買 維修 此手冊零組件
電話：07-466333
Email: service@repairtw.com
Line id: @rzzz
www.repairtw.com

Figure 8.7 Power Supply Interrupt for Overheat Protection (Example)

■ Installing a Braking Unit: CDBR Type

To install a CDBR type braking unit, connect the drive's B1 terminal (units CIMR-2A0004 through 0138 and CIMR-4A0002 through 0072) or +3 terminal (units CIMR-A□2A0169 to 0211 and CIMR-A□4A0088 to 0165) to the positive terminal on the braking unit. Next wire the negative terminals on the drive and braking unit together. Terminal +2 is not used.

Connect the braking resistor to the CDBRs terminals +0 and -0.

Wire the thermal overload relay contact of the CDBR and the braking resistor in series, and connect this signal to a drive digital input. Use this input to trigger a fault in the drive in case a CDBR or braking resistor overload occurs.

Disable dynamic braking transistor protection by setting L8-55 = 0.

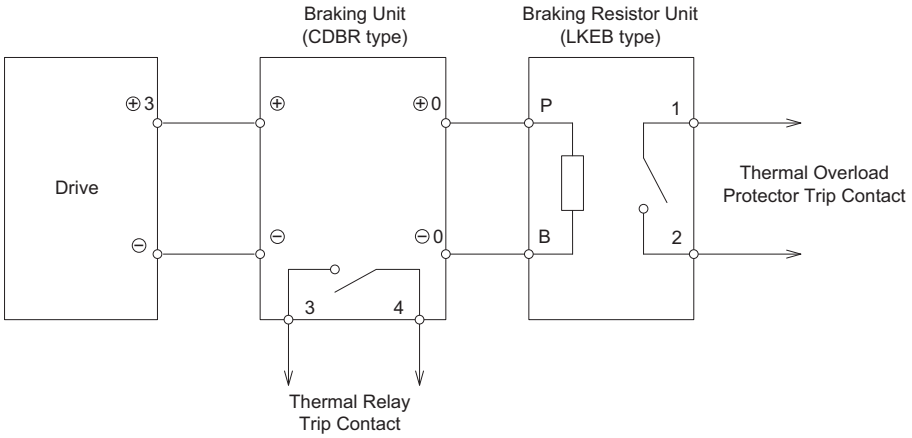

Figure 8.8 Connecting a Braking Unit (CDBR type) and Braking Resistor Unit (LKEB type) (CIMR-A□2A0169 to 0415, 4A0088 to 0675)

■ Using Braking Units in Parallel

When multiple braking units are used, they must be installed with a master-slave configuration with a single braking unit acting as the master. ***Figure 8.9*** illustrates how to wire braking units in parallel.

Wire the thermal overload contacts relays of all CDBRs and all braking resistors in series, then connect this signal to a drive digital input. This input can be used to trigger a fault in the drive in case of overload in any of the CDBRs or braking resistors.

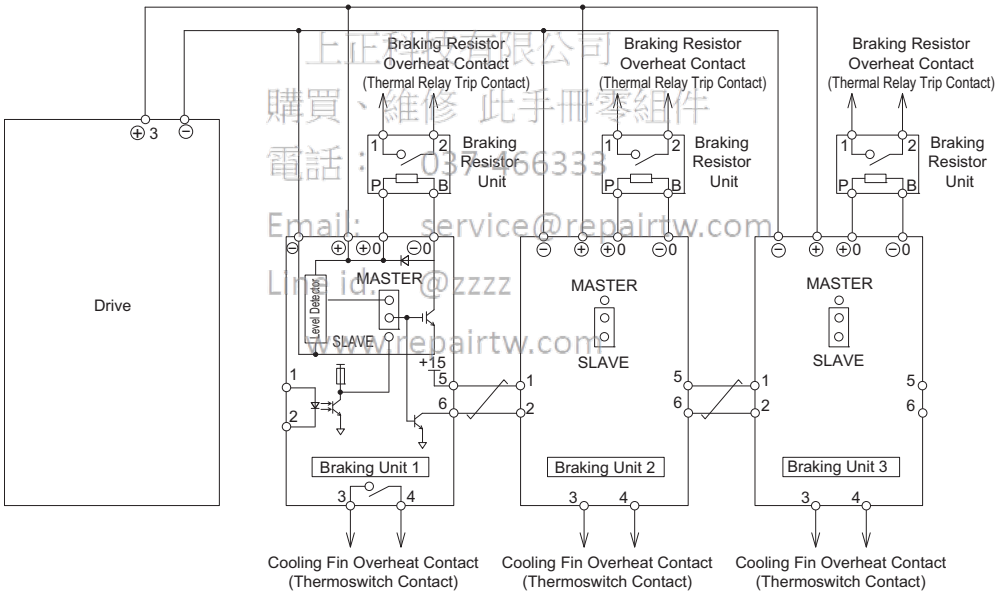

Figure 8.9 Connecting Braking Units in Parallel

◆ Installing a Molded Case Circuit Breaker (MCCB)

Install a MCCB for line protection between the power supply and the main circuit power supply input terminals R/L1, S/L2, and T/L3. This protects the main circuit and devices wired to the main circuit while also providing overload protection.

Consider the following when selecting and installing a MCCB:

- The capacity of the MCCB should be 1.5 to 2 times the rated output current of the drive. Use a MCCB with an operation characteristics so that the MCCB does not trip faster than the drive overload protection works (shuts off the drive after 1 min. operation at 150% of the drive rated current).
- If several drives are connected to one MCCB, use a sequence that shuts the power OFF when an error occurs in one drive by using magnetic contactor (MC) as shown in the following figure.

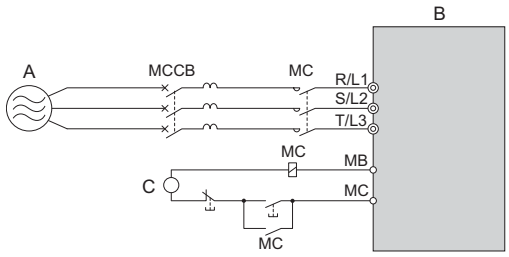

A – Power supply
B – Drive
C – Control Power Supply

Figure 8.10 Power Supply Interrupt Wiring (Example)

WARNING! *Electrical Shock Hazard. Switch off and lock the MCCB (or ELCB) and MC before wiring terminals. Failure to comply may result in serious injury or death.*

■ Installing a Leakage Breaker

Residual currents occurring in drive installations can contain AC, DC and high frequency components that may prevent a normal ELCB from tripping. If a ELCB is required in the installation, always use an all current sensitive ELCB (Type B according to IEC 60755) to ensure proper ground fault interruption.

Leakage currents generated by the drive during normal operation may trip a ELCB even if a ground fault is not present.

Factors that influence the leakage current are:

- Size of the AC drive
- AC drive carrier frequency
- Motor cable type and length
- EMI/RFI filter

If the ELCB trips spuriously consider changing these items or use a ELCB with a higher trip level.

上正科技有限公司
購買、維修 此手冊零組件
電話： 037-466333
Email: service@repairtw.com
Line id: @zzzz
www.repairtw.com

◆ Installing a Magnetic Contactor

Install a magnetic contactor to the drive input for the purposes explained below.

■ Disconnecting the Power Supply

The drive should be shut off with a magnetic contactor (MC) when a fault occurs in any external equipment such as braking resistors.

NOTICE: *Do not connect electromagnetic switches or magnetic contactors to the output motor circuits without proper sequencing. Improper sequencing of output motor circuits could result in damage to the drive.*

NOTICE: *Install a MC on the input side of the drive when the drive should not automatically restart after power loss. To get the full performance life out of the electrolytic capacitors and circuit relays, refrain from switching the drive power supply off and on more than once every 30 minutes. Frequent use can damage the drive. Use the drive to stop and start the motor.*

NOTICE: *Use a magnetic contactor (MC) to ensure that power to the drive can be completely shut off when necessary. The MC should be wired so that it opens when a fault output terminal is triggered.*

Note: **1.** To keep the drive from restarting automatically when power is restored after momentary power loss, install a magnetic contactor to the drive input.
2. To have the drive continue operating through momentary power loss, set up a delay for the magnetic contactor so that it does not open prematurely.

■ Protecting the Braking Resistor or Braking Resistor Unit

Use an MC on the input side of the drive to protect a braking resistor or braking resistor unit from overheat or fire.

WARNING! *Fire Hazard. When using a braking unit, use a thermal relay on the braking resistors and configure a fault contact output for the braking resistor unit to disconnect drive main power via an input contactor. Inadequate braking circuit protection could result in death or serious injury by fire from overheating resistors.*

◆ Connecting an AC or DC Reactor

AC and DC reactors suppress surges in current and improve the power factor on the input side of the drive.

Use a DC reactor or AC reactor or both:

- To suppress harmonic current or improve the power factor of the power supply.
- When using a phase advancing capacitor switch.
- With a large capacity power supply transformer (over 600 kVA).

Note: Use an AC or DC reactor when also connecting a thyristor converter (such as a DC drive) to the same power supply system, regardless of the conditions of the power supply.

■ Connecting an AC Reactor

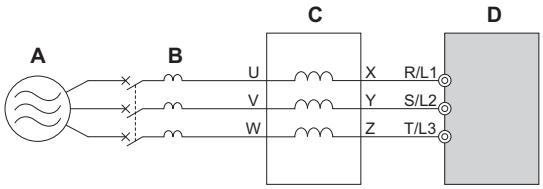

A – Power supply
B – MCCB
C – AC reactor
D – Drive

Figure 8.11 Connecting an AC Reactor

■ Connecting a DC Reactor

A DC reactor can be installed to drive models CIMR-A□2A0004 to 0081 and 4A0002 to 0044. When installing a DC reactor, ensure the jumper between terminals +1 and +2 (terminals are jumpered for shipment) is removed. The jumper must be installed if no DC reactor is used. Refer to *Figure 8.12* for an example of DC reactor wiring.

上百科技有限公司
購買、維修 此手冊零組件
電話： 037-466333
Email: service@repairtw.com
Line id: @zzz2
www.repairtw.com

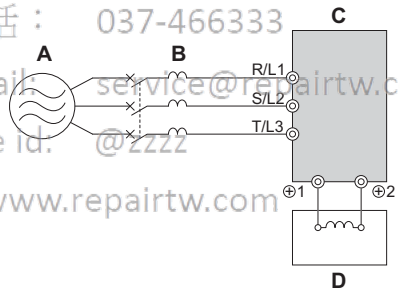

A – Power supply
B – MCCB
C – Drive
D – DC reactor

Figure 8.12 Connecting a DC Reactor

◆ Connecting a Noise Filter

■ Reducing Radiated, Conducted, and Induced Noise

Drives generate noise that can potentially affect surrounding devices like PLCs, etc.

- **Radiated Noise:** Electromagnetic waves noise throughout the radio bandwidth radiated from the drive and cables.
- **Conducted Noise:** Noise generated by the drive and emitted to through the power lines.
- **Induced Noise:** Noise generated by electromagnetic induction can affect control signal lines.

Take the following measurements to prevent noise causing malfunction of other drives or devices:

- Install all components on a well grounded metal plate.
- Keep the motor cable as short as possible.
- Use noise filters on the input side of the drive to reduce conducted noise.
- Install noise filters on the input and output side of the drive, install the drive in a metal enclosure panel and use a shielded motor cable to reduce radiated noise.

- Use shielded motor and control circuit lines and lay control circuit lines at least 30 cm away from power lines in order to prevent malfunction due to induced noise.

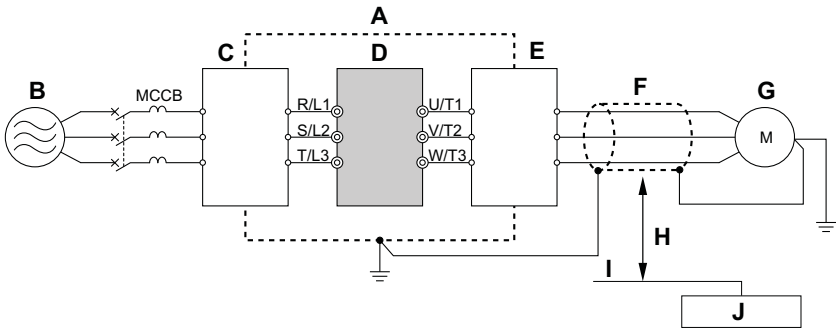

A – Metal enclosure
B – Power supply
C – Input noise filter
D – Drive
E – Output noise filter
F – Shielded motor cable
G – Motor
H – Separate at least 30 cm
I – Control signal lines
J – Controller

Figure 8.13 Reducing Radio Frequency Noise

■ Input-Side Noise Filter

Drive outputs generate noise as a result of high-speed switching. This noise flows from inside the drive back to the power supply, possibly affecting other equipment. Installing a noise filter to the input side of the drive can reduce the amount of noise flowing back into the power supply. This also prevents noise from entering the drive from the power supply.

- Use a noise filter specifically designed for AC drives.
- Install the noise filter as close as possible to the drive.

上止科技有限公司
購買、維修 此手冊零組件
電話： 037-466333
Email: service@repairtw.com
Line id: @zzzz
www.repairtw.com

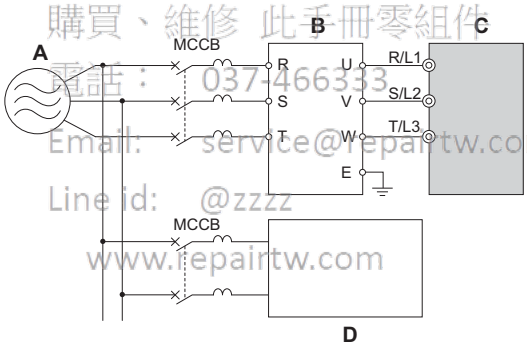

A – Power supply
B – Input-side noise filter
C – Drive
D – Other control device

Figure 8.14 Input-Side Noise Filter (Three-Phase 200/400 V)

This drive is tested according to European standards IEC61800-5-1 and complies with the EMC guidelines. Refer to *EMC Guidelines Compliance on page 510* for details about EMC filter selection and installation.

■ Output-Side Noise Filter

A noise filter on the output side of the drive reduces inductive noise and radiated noise. *Figure 8.15* illustrates an example of output-side noise filter wiring.

NOTICE: *Do not connect phase-advancing capacitors or LC/RC noise filters to the output circuits. Improper application of noise filters could result in damage to the drive.*

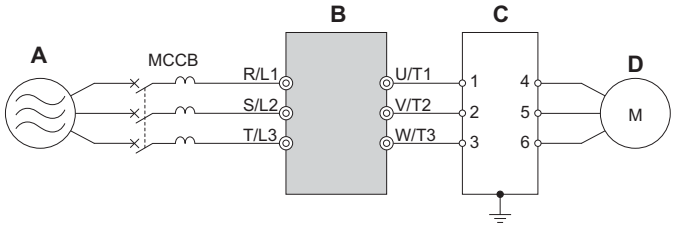

A – Power supply
B – Drive
C – Output-side noise filter
D – Motor

Figure 8.15 Output-Side Noise Filter

◆ Installing Input Fuses

Yaskawa recommends installing a fuse to the input side of the drive to prevent damage to the drive if a short circuit occurs.

Select the appropriate fuse from the table below.

Table 8.2 Input Fuses

Model CIMR-A□	Fuse Type		Model CIMR-A□	Fuse Type	
	Manufacturer: Bussmann			Manufacturer: Bussmann	
	Model	Fuse Ampere Rating		Model	Fuse Ampere Rating
	Three-Phase 200 V Class			Three-Phase 400 V Class	
2A0004	FWH-70B	70	4A0002	FWH-40B	40
2A0006	FWH-70B	70	4A0004	FWH-50B	50
2A0010	FWH-70B	70	4A0005	FWH-70B	70
2A0012	FWH-70B	70	4A0007	FWH-70B	70
2A0021	FWH-90B	90	4A0009	FWH-90B	90
2A0030	FWH-100B	100	4A0011	FWH-90B	90
2A0040	FWH-200B	200	4A0018	FWH-80B	80
2A0056	FWH-200B	200	4A0023	FWH-100B	100
2A0069	FWH-200B	200	4A0031	FWH-125B	125
2A0081	FWH-300A	300	4A0038	FWH-200B	200
2A0110	FWH-300A	300	4A0044	FWH-250A	250
2A0138	FWH-350A	350	4A0058	FWH-250A	250
2A0169	FWH-400A	400	4A0072	FWH-250A	250
2A0211	FWH-400A	400	4A0088	FWH-250A	250
2A0250	FWH-600A	600	4A0103	FWH-250A	250
2A0312	FWH-700A	700	4A0139	FWH-350A	350
2A0360	FWH-800A	800	4A0165	FWH-400A	400
2A0415	FWH-1000A	1000	4A0208	FWH-500A	500
–	–	–	4A0250	FWH-600A	600
–	–	–	4A0296	FWH-700A	700
–	–	–	4A0362	FWH-800A	800
–	–	–	4A0414	FWH-800A	800
–	–	–	4A0515	FWH-1000A	1000
–	–	–	4A0675	FWH-1200A	1200

上正科技有限公司
購買、維修 此手冊零組件
電話: 037-466338
Email: service@repairtw.com
Line id: @zzz
www.repairtw.com

◆ Attachment for External Heatsink

An external heatsink can be attached that projects outside the enclosure. Steps should be taken to ensure that there is enough air circulation around the heatsink.

Contact your Yaskawa sales representative or Yaskawa directly.

◆ Installing a Motor Thermal Overload (oL) Relay on the Drive Output

Motor thermal overload relays protect the motor by disconnecting power lines to the motor due to a motor overload condition.

Install a motor thermal overload relay between the drive and motor:

- When operating multiple motors on a single AC drive.
- When using a power line bypass to operate the motor directly from the power line.

It is not necessary to install a motor thermal overload relay when operating a single motor from a single AC drive. The AC drive has UL recognized electronic motor overload protection built into the drive software.

Note: **1.** Disable the motor protection function (L1-01 = 0) when using an external motor thermal overload relay.
2. The relay should shut off main power on the input side of the main circuit when triggered.

■ General Precautions when Using Thermal Overload Relays

The following application precautions should be considered when using motor thermal overload relays on the output of AC drives in order to prevent nuisance trips or overheat of the motor at low speeds:

1. Low speed motor operation
2. Use of multiple motors on a single AC drive
3. Motor cable length
4. Nuisance tripping resulting from high AC drive carrier frequency

Low Speed Operation and Motor Thermal oL Relays

Generally, thermal relays are applied on general-purpose motors. When general-purpose motors are driven by AC drives, the motor current is approximately 5% to 10% greater than if driven by a commercial power supply. In addition, the cooling capacity of a motor with a shaft-driven fan decreases when operating at low speeds. Even if the load current is within the motor rated value, motor overheating may occur. A thermal relay cannot effectively protect the motor due to the reduction of cooling at low speeds. For this reason, apply the UL recognized electronic thermal overload protection function built into the drive whenever possible.

上正科技有限公司
購買 維修 此手冊零組件
電話： 037-466333
Email: service@repairtw.com
Line id: @zzzz
www.repairtw.com

UL recognized electronic thermal overload function of the drive: Speed-dependent heat characteristics are simulated using data from standard motors and force-ventilated motors. The motor is protected from overload using this function.

Using a Single Drive to Operate Multiple Motors

Turn off the electronic thermal overload function. Please refer to the appropriate product instruction manual to determine which parameter disables this function.

Note: The UL recognized electronic thermal overload function cannot be applied when operating multiple motors with a single drive.

Long Motor Cables

When a high carrier frequency and long motor cables are used, nuisance tripping of the thermal relay may occur due to increased leakage current. To avoid this, reduce the carrier frequency or increase the tripping level of the thermal overload relay.

Nuisance Tripping Due to a High AC Drive Carrier Frequency

Current waveforms generated by high carrier frequency PWM drives tend to increase the temperature in overload relays. It may be necessary to increase the trip level setting when encountering nuisance triggering of the relay.

WARNING! *Fire Hazard. Confirm an actual motor overload condition is not present prior to increasing the thermal oL trip setting. Check local electrical codes before making adjustments to motor thermal overload settings.*

Appendix: A

Specifications

A.1 HEAVY DUTY AND NORMAL DUTY RATINGS. 388
A.2 THREE-PHASE 200 V CLASS DRIVES 389
A.3 THREE-PHASE 400 V CLASS DRIVES 390
A.4 DRIVE SPECIFICATIONS 391
A.5 DRIVE WATT LOSS DATA 393
A.6 DRIVE DERATING DATA 394

上正科技有限公司
購買、維修 此手冊零組件
電話： 037-466333
Email: service@repairtw.com
Line id: @zzzz
www.repairtw.com

A.1 Heavy Duty and Normal Duty Ratings

The capacity of the drive is based on two types of load characteristics: Heavy Duty (HD) and Normal Duty (ND).

Refer to Selecting the Appropriate Load Rating on page 388 for the differences between HD and ND.

Table A.1 Selecting the Appropriate Load Rating

Setting Parameter C6-01	Rated Output Current	Overload Tolerance	Default Carrier Frequency
0: Heavy Duty (default)	HD Rating varies by model <1>	150% rated output current for 60 s	2 kHz
1: Normal Duty	ND Rating varies by model <1>	120% rated output current for 60 s varies by model	2 kHz, Swing PWM

<1> Refer to *Three-Phase 200 V Class Drives on page 389* and *Three-Phase 400 V Class Drives on page 390* for information on rating changes based on drive model.



HD and ND: HD refers to applications requiring constant torque output, while ND refers to applications with variable torque needs. The drive allows the user to select HD or ND torque depending on the application. Fans, pumps, and blowers should use ND (C6-01 = 1), and other applications generally use HD (C6-01 = 0).

Swing PWM: Swing PWM equivalent to a 2 kHz audible noise. This function turns the motor noise into a less obtrusive white noise.

Note: Differences between HD ratings and ND ratings for the drive include rated input and output current, overload capacity, carrier frequency, and current limit. The default setting is for HD (C6-01 = 0).

上正科技有限公司
購買、維修 此手冊零組件
電話： 037-466333
Email: service@repairtw.com
Line id: @zzzz
www.repairtw.com

A.2 Three-Phase 200 V Class Drives

Table A.2 Power Ratings (Three-Phase 200 V Class)

Item			Specification																
CIMR-A□2A			0004	0006	0010	0012	0021	0030	0040	0056	0069	0081	0110	0138	0169	0211	0250	0312	0360	0415
Maximum Applicable Motor Capacity (kW) <1>		HD Rating	0.55	1.1	1.5	2.2	4.0	5.5	7.5	11	15	18.5	22	30	37	45	55	75	90	110
		ND Rating	0.75	1.1	2.2	3	5.5	7.5	11	15	18.5	22	30	37	45	55	75	90	110	110
Input	Input Current (A) <2>	HD Rating	2.9	5.8	7.5	11	18.9	28	37	52	68	80	82	111	136	164	200	271	324	394
		ND Rating	3.9	7.3	10.8	13.9	24	37	52	68	80	96	111	136	164	200	271	324	394	471
	Rated Voltage Rated Frequency		Three-phase 200 to 240 Vac 50/60 Hz/270 to 340 Vdc																	
	Allowable Voltage Fluctuation		-15 to 10%																	
	Allowable Frequency Fluctuation		±5%																	
	Input Power (kVA)	HD Rating	1.3	2.2	4.1	5.8	9.5	14	18	27	36	44	37	51	62	75	91	124	148	180
		ND Rating	2.2	3.1	5.8	7.8	14	18	27	36	44	52	51	62	75	91	124	148	180	215
Output	Rated Output Capacity (kVA) <3>	HD Rating	1.2	1.9	3	4.2	6.7	9.5	12.6	17.9	23	29	32	44	55	69	82	108	132	158
		ND Rating	1.3	2.3	3.7	4.6	8	11.4	15.2	21	26	31	42	53	64	80	95	119	137	158
	Rated Output Current (A)	HD Rating	3.2 <5>	5 <5>	8 <5>	11 <5>	17.5 <5>	25 <5>	33 <5>	47 <5>	60 <5>	75 <5>	85 <5>	115 <5>	145 <6>	180 <6>	215 <6>	283 <6>	346 <6>	415 <4>
		ND Rating <4>	3.5	6	9.6	12	21	30	40	56	69	81	110	138	169	211	250	312	360	415
	Overload Tolerance		HD Rating: 150% of rated output current for 60 s (Derating may be required for applications that start and stop frequently) ND Rating: 120% of rated output current for 60 s																	
	Carrier Frequency		User adjustable between 2 and 15 kHz												User adjustable between 2 and 10 kHz					
	Maximum Output Voltage (V)		Three-phase 200 to 240 V (proportional to input voltage)																	
	Maximum Output Frequency (Hz)		400 Hz (user-set)																	

<1> The motor capacity (kW) refers to a Yaskawa 4-pole motor. The rated output current of the drive output amps should be equal to or greater than the motor rated current.
<2> Assumes operation at the rated output current. Input current rating varies depending on the power supply transformer, input reactor, wiring connections, and power supply impedance.
<3> Rated motor capacity is calculated with a rated output voltage of 220 V.
<4> Carrier frequency is set to 2 kHz. Current derating is required in order to raise the carrier frequency.
<5> Carrier frequency can be increased up the 8 kHz while keeping this current rating. Higher carrier frequency settings require derating.
<6> Carrier frequency can be increased up the 5 kHz while keeping this current rating. Higher carrier frequency settings require derating.

上正科技有限公司
購買、維修 此手冊零組件
電話: 0975-466139
Email: service@repairtw.com
Line id: @zzzz
www.repairtw.com

A.3 Three-Phase 400 V Class Drives

Table A.3 Power Ratings (Three-Phase 400 V Class)

Item			Specification													
CIMR-A□4A			0002	0004	0005	0007	0009	0011	0018	0023	0031	0038	0044	0058	0072	0088	0103
Maximum Applicable Motor Capacity (kW) <1>		HD Rating	0.55	1.1	1.5	2.2	3	4.0	5.5	7.5	11	15	18.5	22	30	37	45
		ND Rating	0.75	1.5	2.2	3	4.0	5.5	7.5	11	15	18.5	22	30	37	45	55
Input	Input Current (A) <2>	HD Rating	1.8	3.2	4.4	6	8.2	10.4	15	20	29	39	44	43	58	71	86
		ND Rating	2.1	4.3	5.9	8.1	9.4	14	20	24	38	44	52	58	71	86	105
	Rated Voltage Rated Frequency		Three-phase 380 to 480 Vac 50/60 Hz/510 to 680 Vdc														
	Allowable Voltage Fluctuation		-15 to 10%														
	Allowable Frequency Fluctuation		±5%														
	Input Power (kVA)	HD Rating	1.4	2.3	4.3	6.1	8.1	10.0	14.6	19.2	28.4	37.5	46.6	39.3	53.0	64.9	78.6
		ND Rating	2.3	4.3	6.1	8.1	10.0	14.5	19.4	28.4	37.5	46.6	54.9	53.0	64.9	78.6	96.0
Output	Rated Output Capacity (kVA) <3>	HD Rating	1.4	2.6	3.7	4.2	5.5	7	11.3	13.7	18.3	24	30	34	48	57	69
		ND Rating <4>	1.6	3.1	4.1	5.3	6.7	8.5	13.3	17.5	24	29	34	44	55	67	78
	Rated Output Current (A)	HD Rating	1.8 <5>	3.4 <5>	4.8 <5>	5.5 <5>	7.2 <5>	9.2 <5>	14.8 <5>	18 <5>	24 <5>	31 <5>	39 <5>	45 <5>	60 <5>	75 <5>	91 <5>
		ND Rating <4>	2.1	4.1	5.4	6.9	8.8	11.1	17.5	23	31	38	44	58	72	88	103
	Overload Tolerance		HD Rating: 150% of rated output current for 60 s (Derating may be required for applications that start and stop frequently) ND Rating: 120% of rated output current for 60 s														
	Carrier Frequency		User adjustable between 2 and 15 kHz														
	Maximum Output Voltage (V)		Three-phase 380 to 480 V (proportional to input voltage)														
	Maximum Output Frequency (Hz)		400 Hz (user-adjustable)														

Table A.4 Power Ratings (Three-Phase 400 V Class)

Item			Specification								
CIMR-A□4A			0139	0165	0208	0250	0296	0362	0414	0515	0675
Maximum Applicable Motor Capacity (kW) <1>		HD Rating	55	75	90	110	132	160	185	220	315
		ND Rating	75	90	110	132	160	185	220	250	355
Input	Input Current (A) <2>	HD Rating	105	142	170	207	248	300	346	410	584
		ND Rating	142	170	207	248	300	346	410	465	657
	Rated Voltage Rated Frequency		Three-phase 380 to 480 Vac 50/60 Hz/510 to 680 Vdc								
	Allowable Voltage Fluctuation		-15 to 10%								
	Allowable Frequency Fluctuation		±5%								
	Input Power (kVA)	HD Rating	96.0	129.9	155	189	227	274	316	375	508
		ND Rating	129.9	155.5	189	227	274	316	375	416	601
Output	Rated Output Capacity (kVA) <3>	HD Rating	85	114	137	165	198	232	282	343	461
		ND Rating <4>	106	126	159	191	226	276	316	392	514
	Rated Output Current (A)	HD Rating	112 <6>	150 <6>	180 <6>	216 <6>	260 <6>	304 <4>	370 <6>	450 <4>	605 <4>
		ND Rating <4>	139	165	208	250	296	362	414	515	675
	Overload Tolerance		HD Rating: 150% of rated output current for 60 s (Derating may be required for applications that start and stop frequently) ND Rating: 120% of rated output current for 60 s								
	Carrier Frequency		User adjustable between 2 and 10 kHz						User adjustable between 2 to 5 kHz		
	Maximum Output Voltage (V)		Three-phase 380 to 480 V (proportional to input voltage)								
	Maximum Output Frequency (Hz)		400 Hz (user-adjustable)						150 Hz (user-adjustable)		

上正科技有限公司
購買 維修 此手冊零組件
電話 0317-466333
Email: service@repairtw.com
Line id: @zzzz
www.repairtw.com

<1> The motor capacity (kW) refers to a Yaskawa 4-pole motor. The rated output current of the drive output amps should be equal to or greater than the motor rated current.
<2> Assumes operation at the rated output current. Input current rating varies depending on the power supply transformer, input reactor, wiring conditions, and power supply impedance.
<3> Rated motor capacity is calculated with a rated output voltage of 440 V.
<4> Carrier frequency is set to 2 kHz. Current derating is required in order to raise the carrier frequency.
<5> Carrier frequency can be increased up the 8 kHz while keeping this current rating. Higher carrier frequency settings require derating.
<6> Carrier frequency can be increased up the 5 kHz while keeping this current rating. Higher carrier frequency settings require derating

A.4 Drive Specifications

Note: **1.** Perform rotational Auto-Tuning to obtain the performance specifications given below.
2. For optimum performance life of the drive, install the drive in an environment that meets the required specifications.

Item		Specification
Control Characteristics	Control Method	The following control methods can be set using drive parameters: • V/f Control (V/f) • V/f Control with PG (V/f w/PG) • Open Loop Vector Control (OLV) • Closed Loop Vector Control (CLV) • Open Loop Vector Control for PM (OLV/PM) • Advanced Open Loop Vector Control for PM (AOLV/PM) • Closed Loop Vector Control for PM (CLV/PM)
	Frequency Control Range	0.01 to 400 Hz
	Frequency Accuracy (Temperature Fluctuation)	Digital input: within ±0.01% of the max output frequency (-10 to +40°C) Analog input: within ±0.1% of the max output frequency (25°C ±10°C)
	Frequency Setting Resolution	Digital inputs: 0.01 Hz Analog inputs: 1/2048 of the maximum output frequency setting (11 bit plus sign)
	Output Frequency Resolution	0.001 Hz
	Frequency Setting Signal	-10 to 10 V, 0 to 10 V, 0 to 20 mA, 4 to 20 mA, Pulse Train Input
	Starting Torque <1>	V/f, V/f w/PG: 150% at 3 Hz OLV: 200% at 0.3 Hz CLV, AOLV/PM, CLV/PM: 200% at 0 r/min OLV/PM: 100% at 5% speed
	Speed Control Range <1>	V/f, V/f w/PG: 1:40 OLV: 1:200 CLV, CLV/PM: 1:1500 OLV/PM: 1:20 AOLV/PM: 1:100
	Speed Control Accuracy <1>	OLV: ±0.2% (25°C ±10°C), CLV: ±0.02% (25°C ±10°C)
	Speed Response <1>	OLV, OLV/PM, AOLV/PM: 10 Hz CLV, CLV/PM: 50 Hz
	Torque Limit	Parameters setting allow separate limits in four quadrants (available in OLV, CLV, AOLV/PM, CLV/PM)
	Accel/Decel Time	0.0 to 6000.0 s (4 selectable combinations of independent acceleration and deceleration settings)
	Braking Torque	Approx. 20% (approx. 125% when using braking resistor) <2> ① Short-time decel torque <3>: over 100% for 0.4/ 0.75 kW motors, over 50% for 1.5 kW motors, and over 20% for 2.2 kW and above motors <4> (over excitation braking/High Slip Braking: approx. 40%) ② Continuous regenerative torque: approx. 20% <4> (approx. 125% with dynamic braking resistor option <2>: 10% ED, 10s)
	Braking Transistor	Models 2A0004 to 2A0138, 4A0002 to 4A0072 have a built-in braking transistor.
	V/f Characteristics	User-selected programs and V/f preset patterns possible
	Main Control Functions	Torque Control, Droop Control, Speed/torque Control Switching, Feed Forward Control, Zero Servo Function, Momentary Power Loss Ride-Thru, Speed Search, Overtorque/Undertorque Detection, Torque Limit, 17 Step Speed (max), Accel/decel Switch, S-curve Accel/decel, 3-wire Sequence, Auto-tuning (rotational, stationary tuning), Dwell, Cooling Fan on/off Switch, Slip Compensation, Torque Compensation, Frequency Jump, Upper/lower Limits for Frequency Reference, DC Injection Braking at Start and Stop, Overexcitation Braking, High Slip Braking, PID Control (with sleep function), Energy Saving Control, MEMOBUS/Modbus Comm. (RS-422/485 max, 115.2 kbps), Fault Restart, Application Presets, DriveWorksEZ (customized function), Removable Terminal Block with Parameter Backup Function, Online Tuning, KEB, Overexcitation Deceleration, Inertia (ASR) Tuning, Overvoltage Suppression, High Frequency Injection, etc.
Protection Functions	Motor Protection	Electronic thermal overload relay
	Momentary Overcurrent Protection	Drive stops when output current exceeds 200% of Heavy Duty Rating
	Overload Protection	Drive stops after 60 s at 150% of rated Heavy Duty output current <5>
	Overvoltage Protection	200 V class: Stops when DC bus voltage exceeds approx. 410 V 400 V class: Stops when DC bus voltage exceeds approx. 820 V
	Undervoltage Protection	200 V class: Stops when DC bus voltage falls below approx. 190 V 400 V class: Stops when DC bus voltage falls below approx. 380 V
	Momentary Power Loss Ride-Thru	Immediately stop after 15 ms or longer power loss. <6> Continuous operation during power loss than 2 s (standard) <7>
	Heatsink Overheat Protection	Thermistor
	Braking Resistor Overheat Protection	Overheat input signal for braking resistor (Optional ERF-type, 3% ED)
	Stall Prevention	Stall Prevention is available during acceleration, deceleration, and during run.
	Ground Protection	Electronic circuit protection <8>
	DC Bus Charge LED	Remains lit until DC bus voltage falls below 50 V
Environment	Area of Use	Indoors
	Ambient Temperature	-10 to 40°C (NEMA Type 1 enclosure), -10 to 50°C (IP00 enclosure), up to 60°C with output current derating
	Humidity	95 RH% or less (no condensation)
	Storage Temperature	-20 to 60°C (short-term temperature during transportation)
	Altitude	Up to 1000 meters without derating, up to 3000m with output current and voltage derating
	Vibration / Shock	10 to 20 Hz: 9.8 m/s² 20 to 55 Hz: 5.9 m/s² (2A0004 to 2A0211, 4A0002 to 4A0165) 2.0 m/s² (2A0250 to 2A0415, 4A0208 to 4A0675)
Safety Standard		Two Safe Disable inputs and 1 EDM output according to EN61800-5-1, EN954-1/ISO13849 Cat. 3, IEC/EN61508 SIL2, Insulation coordination: class 1 **Note:** Time from input open to drive output stop is less than 1 ms
Protection Design		IP00 enclosure, IP20/NEMA Type 1 enclosure <9>

上能科技有限公司
購買、維修、此卡加裝程序
電話：0974668359
Email：service@repairtw.com
Line ID：@xzz
www.repairtw.com

<1> The accuracy of these values depends on motor characteristics, ambient conditions, and drive settings. Specifications may vary with different motors and with changing motor temperature. Contact Yaskawa for consultation.
<2> Ensure that Stall Prevention is disabled during deceleration (L3-04 = 0), when using a regenerative converter, a regenerative unit, a braking resistor or the Braking Resistor Unit. The default setting for the Stall Prevention function will interfere with the braking resistor.
<3> Instantaneous average deceleration torque refers to the torque required to decelerate the motor (uncoupled from the load) from the rated motor speed down to zero in the shortest time.
<4> Actual specifications may vary according to motor characteristics.
<5> Overload protection may be triggered when operating with 150% of the rated output current if the output frequency is less than 6 Hz.
<6> May be shorter due to load conditions and motor speed.
<7> A separate Momentary Power Loss Ride-Thru Unit is required for the drives CIMR-A□2A0004 through 2A0056 and 4A0002 through 4A0031 if the application needs to continue running during a momentary power loss up to 2 s.
<8> Ground protection cannot be provided when the impedance of the ground fault path is too low, or when the drive is powered up while a ground fault is present at the output.
<9> Removing the top protective cover from a NEMA Type 1 enclosure drive voids the NEMA Type 1 protection but still keeps IP20 conformity. This is applicable to models 2A0004 to 2A0081 and 4A0002 to 4A0044.

上正科技有限公司
購買、維修 此手冊零組件
電話： 037-466333
Email: service@repairtw.com
Line id: @zzzz
www.repairtw.com

A.5 Drive Watt Loss Data

Table A.5 Watt Loss 200 V Class Three-Phase Models

Model Number CIMR-A☐	Heavy Duty				Normal Duty			
	Rated Amps (A)	Heatsink Loss (W)	Interior Unit Loss (W)	Total Loss (W)	Rated Amps (A) <3>	Heatsink Loss (W)	Interior Unit Loss (W)	Total Loss (W)
2A0004	3.2 <1>	14.8	44	59	3.5	18.4	47	66
2A0006	5.0 <1>	24	48	72	6.0	31	51	82
2A0010	8.0 <1>	43	52	95	9.6	57	58	115
2A0012	11.0 <1>	64	58	122	12.0	77	64	141
2A0021	17.5 <1>	101	67	168	21	138	83	222
2A0030	25 <1>	194	92	287	30	262	117	379
2A0040	33 <1>	214	105	319	40	293	145	437
2A0056	47 <1>	280	130	410	56	371	175	546
2A0069	60 <1>	395	163	558	69	491	205	696
2A0081	75 <1>	460	221	681	81	527	257	785
2A0110	85 <1>	510	211	721	110	719	286	1005
2A0138	115 <1>	662	250	912	138	842	312	1154
2A0169	145 <1>	816	306	1122	169	1014	380	1394
2A0211	180 <2>	976	378	1354	211	1218	473	1691
2A0250	215 <2>	1514	466	1980	250	1764	594	2358
2A0312	283 <2>	1936	588	2524	312	2020	665	2686
2A0360	346 <2>	2564	783	3347	360	2698	894	3591
2A0415	415 <3>	2672	954	3626	415	2672	954	3626

<1> These values assume the carrier frequency is set to 8 kHz.
<2> These values assume the carrier frequency is set to 5 kHz.
<3> These values assume the carrier frequency is set to 2 kHz.

Table A.6 Watt Loss 400 V Class Three-Phase Models

Model Number CIMR-A☐	Heavy Duty				Normal Duty			
	Rated Amps (A)	Heatsink Loss (W)	Interior Unit Loss (W)	Total Loss (W)	Rated Amps (A) <3>	Heatsink Loss (W)	Interior Unit Loss (W)	Total Loss (W)
4A0002	1.8 <1>	15.9	45	61	2.1	20	48	68
4A0004	3.4 <1>	25	46	70	4.1	32	49	81
4A0005	4.8 <1>	37	49	87	5.4	45	53	97
4A0007	5.5 <1>	48	53	101	6.9	62	59	121
4A0009	7.2 <1>	53	55	108	8.8	66	60	126
4A0011	9.2 <1>	69	61	130	11.1	89	73	162
4A0018	14.8 <1>	135	86	221	17.5	177	108	285
4A0023	18.0 <1>	150	97	247	23	216	138	354
4A0031	24 <1>	208	115	323	31	295	161	455
4A0038	31 <1>	263	141	403	38	340	182	521
4A0044	39 <1>	330	179	509	44	390	209	599
4A0058	45 <1>	349	170	518	58	471	215	686
4A0072	60 <1>	484	217	701	72	605	265	870
4A0088	75 <1>	563	254	817	88	684	308	993
4A0103	91 <1>	723	299	1022	103	848	357	1205
4A0139	112 <1>	908	416	1325	139	1215	534	1749
4A0165	150 <2>	1340	580	1920	165	1557	668	2224
4A0208	180 <2>	1771	541	2313	208	1800	607	2408
4A0250	216 <2>	2360	715	3075	250	2379	803	3182
4A0296	260 <2>	2391	787	3178	296	2448	905	3353
4A0362	304 <2>	3075	985	4060	362	3168	1130	4298
4A0414	370 <2>	3578	1164	4742	414	3443	1295	4738
4A0515	450 <3>	3972	1386	5358	515	4850	1668	6518
4A0675	605 <3>	4191	1685	5875	675	4861	2037	6898

上海维修 此手册零组件
電話 037-456333
Email: service@repairtw.com
Line id: @zzzz
www.repairtw.com

<1> These values assume the carrier frequency is set to 8 kHz.
<2> These values assume the carrier frequency is set to 5 kHz.
<3> These values assume the carrier frequency is set to 2 kHz.

A.6 Drive Derating Data

The drive can be operated at above the rated temperature, altitude, and default carrier frequency by derating the drive capacity.

◆ Carrier Frequency Derating

As the carrier frequency of the drive is increased above the factory default setting, the drive's rated output current must be derated according to ***Figure A.1*** to ***Figure A.6***.

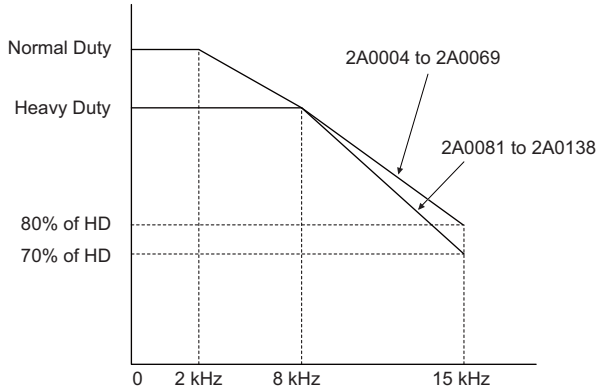

Figure A.1 Carrier Frequency Derating (CIMR-A□2A0004 to 2A0138)

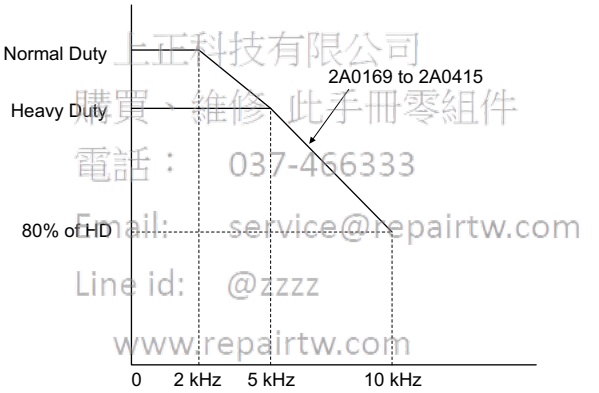

上正科技有限公司
購買、維修 此手冊零組件
電話： 037-466333
Email: service@repairtw.com
Line id: @zzzz
www.repairtw.com

Figure A.2 Carrier Frequency Derating (CIMR-A□2A0169 to 2A0415)

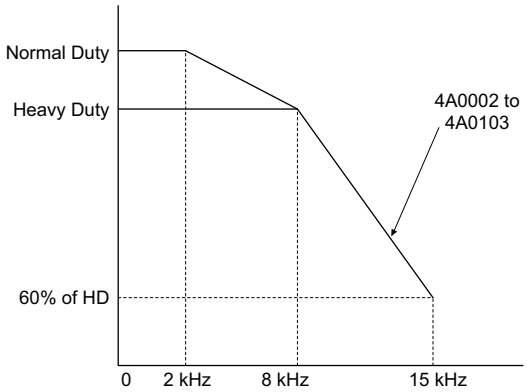

Figure A.3 Carrier Frequency Derating (CIMR-A□4A0002 to 4A0103)

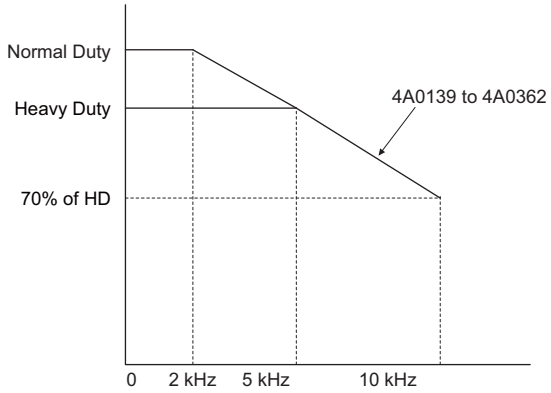

Figure A.4 Carrier Frequency Derating (CIMR-A□4A0139 to 4A0362)

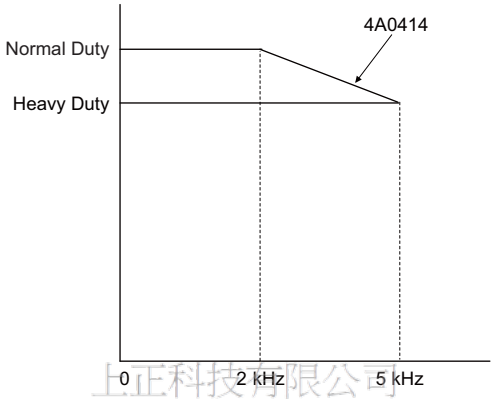

上正科技有限公司
購買、維修 此手冊零組件
電話： 037-466333
Email: service@repairtw.com
Line id: @zzzz
www.repairtw.com

Figure A.5 Carrier Frequency Derating (CIMR-A4A0414)

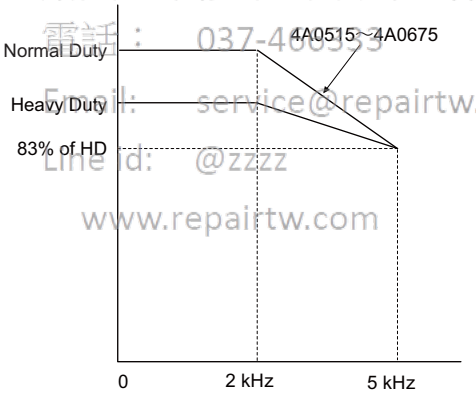

Figure A.6 Carrier Frequency Derating (CIMR-A□4A0515 and 4A0675)

◆ Temperature Derating

To ensure the maximum performance life, the drives output current must be derated like shown in *Figure A.7* when the drive is installed in areas with high ambient temperature or if drives are Side-by-Side mounted in a cabinet. In order to ensure reliable drive overload protection, the parameters L8-12 and L8-35 must also be set according to the installation conditions.

■ Parameter Settings

No.	Name	Description	Range	Def.
L8-12	Ambient Temperature Setting	Adjust the drive overload (oL2) protection level when the drive is installed in an environment that exceeds its ambient temperature rating.	-10 to 50	40°C
L8-35	Installation Method Selection	0: IP00 Enclosure 1: Side-by-Side Mounting 2: NEMA Type 1 Enclosure 3: Finless Drive or External Heatsink Installation	0 to 3	0

IP00 Enclosure

Drive operation between -10°C and 50°C allows 100% continuous current without derating.

Side-by-Side Mounting

Drive operation between -10°C and 30°C allows 100% continuous current without derating. Operation between 30°C and 50°C requires output current derating.

NEMA Type 1 Enclosure

Drive operation between -10°C and 40°C allows 100% continuous current without derating. Operation between 40°C and 50°C requires output current derating.

External Heatsink Installation, Finless Drive

Drive operation between -10°C and 40°C allows 100% continuous current without derating. Operation between 40°C and 50°C requires output current derating.

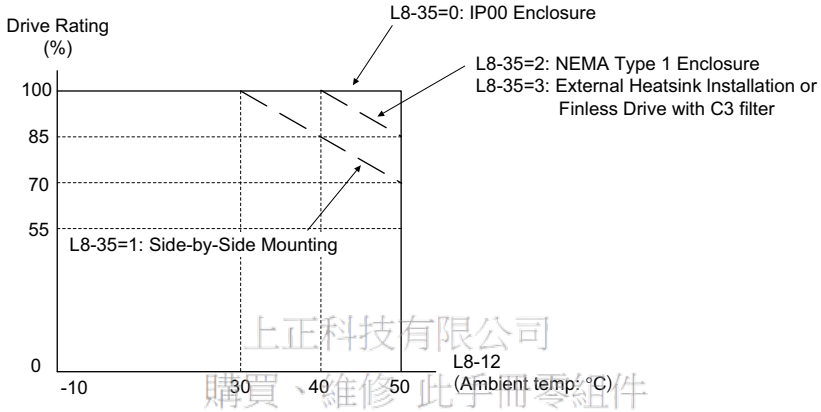

Figure A.7 Ambient Temperature and Installation Method Derating

上正科技有限公司
購買、維修此手冊零組件
電話： 037-466333
Email: service@repairtw.com
Line Id: @zzzz
www.repairtw.com

◆ Altitude Derating

The drive standard ratings are valid for an installation altitude up to 1000 m. If the altitude exceeds 1000 m both the drive rated voltage and the rated output current must be derated for 1% per 100 m. The maximum altitude is 3000 m.

Appendix: B

Parameter List

This appendix contains a full listing of all parameters and settings available in the drive.

B.1 UNDERSTANDING THE PARAMETER TABLE. 398
B.2 PARAMETER GROUPS 399
B.3 PARAMETER TABLE 400
B.4 CONTROL MODE DEPENDENT PARAMETER DEFAULT VALUES 454
B.5 V/F PATTERN DEFAULT VALUES 456
B.6 DEFAULTS BY DRIVE MODEL SELECTION (O2-04) AND ND/HD (C6-01). 457
B.7 PARAMETERS THAT CHANGE WITH THE MOTOR CODE SELECTION 463

上正科技有限公司
購買、維修 此手冊零組件
電話： 037-466333
Email: service@repairtw.com
Line id: @zzzz
www.repairtw.com

B.1 Understanding the Parameter Table

◆ Control Modes, Symbols, and Terms

The table below lists terms and symbols used in this section to indicate which parameters are available in which control modes.

Note: For detailed instructions on each control mode, *Refer to Control Mode Selection on page 28*.

Table B.1 Symbols and Icons Used in the Parameter Table

Symbol	Description
All Modes	Indicates the parameter is accessible in all control modes.
V/f	Parameter is available when operating the drive with V/f Control.
V/f w/PG	Parameter is available when operating the drive with V/f with PG Control.
OLV	Parameter is available when operating the drive with Open Loop Vector.
CLV	Parameter is available when operating the drive with Closed Loop Vector.
OLV/PM	Parameter is available when operating the drive with Open Loop Vector for PM motors.
AOLV/PM	Parameter is available when operating the drive with Advanced Open Loop Vector for PM motors.
CLV/PM	Parameter is available when operating the drive with Closed Loop Vector for PM motors.
RUN	Indicates this parameter can be changed during run.
Motor 2	Refers to a second motor when the drive is operating two motors. Switch between these motors using the multi-function input terminals.

Note: If a parameter is not available in a certain control mode, the symbol for that control mode is grayed out.

上正科技有限公司
購買、維修 此手冊零組件
電話： 037-466333
Email: service@repairtw.com
Line id: @zzzz
www.repairtw.com

B.2 Parameter Groups

Parameter Group	Name	Page
A1	Initialization Parameters	400
A2	User Parameters	400
b1	Operation Mode Selection	401
b2	DC Injection Braking and Short Circuit Braking	402
b3	Speed Search	402
b4	Timer Function	403
b5	PID Control	403
b6	Dwell Function	405
b7	Droop Control	405
b8	Energy Saving	405
b9	Zero Servo	405
C1	Acceleration and Deceleration Times	406
C2	S-Curve Characteristics	406
C3	Slip Compensation	407
C4	Torque Compensation	407
C5	Automatic Speed Regulator (ASR)	408
C6	Carrier Frequency	409
d1	Frequency Reference	411
d2	Frequency Upper/Lower Limits	412
d3	Jump Frequency	412
d4	Frequency Reference Hold and Up/Down 2 Function	412
d5	Torque Control	413
d6	Field Weakening and Field Forcing	413
d7	Offset Frequency	414
E1	V/f Pattern for Motor 1	414
E2	Motor 1 Parameters	415
E3	V/f Pattern for Motor 2	416
E4	Motor 2 Parameters	416
E5	PM Motor Settings	417
F1	PG Speed Control Card (PG-B3/PG-X3)	418
F2	Analog Input Card (AI-A3)	420
F3	Digital Input Card (DI-A3)	420
F4	Analog Monitor Card (AO-A3)	420
F5	Digital Output Card (DO-A3)	421
F6	Communication Option Card	421
H1	Multi-Function Digital Inputs	423
H2	Multi-Function Digital Outputs	427
H3	Multi-Function Analog Inputs	430
H4	Multi-Function Analog Outputs	432
H5	MEMOBUS/Modbus Serial Communication	432
H6	Pulse Train Input/Output	433
L1	Motor Protection	434
L2	Momentary Power Loss Ride-Thru	434
L3	Stall Prevention	435
L4	Speed Detection	436
L5	Fault Restart	437
L6	Torque Detection	437
L7	Torque Limit	438
L8	Drive Protection	438
n1	Hunting Prevention	439
n2	Speed Feedback Detection Control (AFR) Tuning	440
n3	High Slip Braking (HSB) and Overexcitation Braking	440
n5	Feed Forward Control	441
n6	Online Tuning	441
n8	PM Motor Control Tuning	441
o1	Digital Operator Display Selection	442
o2	Digital Operator Keypad Functions	443
o3	Copy Function	443
o4	Maintenance Monitor Settings	443
q	DriveWorksEZ Parameters	444
r	DriveWorksEZ Connection Parameters	444
T1	Induction Motor Auto-Tuning	444
T2	PM Motor Auto-Tuning	445
T3	ASR and Inertia Tuning	446
U1	Operation Status Monitors	447
U2	Fault Trace	449
U3	Fault History	450
U4	Maintenance Monitors	450
U5	PID Monitors	451
U6	Operation Status Monitors	451
U8	DriveWorksEZ Monitors	453

上正科技有限公司
購買、維修此手冊零組件
電話： 037-466333
Email: service@repairtw.com
Line id: @zzz
www.repairtw.com

B.3 Parameter Table

◆ A: Initialization Parameters

The A parameter group creates the operating environment for the drive. This includes the parameter Access Level, Motor Control Method, Password, User Parameters and more.

■ A1: Initialization Parameters

No.(Addr.)	Name	Description	Setting	Page
A1-00 (100H) RUN <3>	Language Selection	All Modes 0: English 1: Japanese 2: German 3: French 4: Italian 5: Spanish 6: Portuguese 7: Chinese	Default: 0 Min: 0 Max: 7	130
A1-01 (101H) RUN <2>	Access Level Selection	All Modes 0: View and set A1-01 and A1-04. U□-□□ parameters can also be viewed. 1: User Parameters (access to a set of parameters selected by the user, A2-01 to A2-32) 2: Advanced Access (access to view and set all parameters)	Default: 2 Min: 0 Max: 2	130
A1-02 (102H) <3>	Control Method Selection	All Modes 0: V/f Control 1: V/f Control with PG 2: Open Loop Vector Control 3: Closed Loop Vector Control 5: Open Loop Vector Control for PM 6: Advanced Open Loop Vector Control for PM 7: Closed Loop Vector Control for PM	Default: 0 Min: 0 Max: 7	130
A1-03 (103H)	Initialize Parameters	All Modes 0: No initialization 1110: User Initialize (parameter values must be stored using parameter o2-03) 2220: 2-wire initialization 3330: 3-wire initialization 5550: oPE04 error reset	Default: 0 Min: 0 Max: 5550	131
A1-04 (104H)	Password	All Modes When the value set into A1-04 does not match the value set into A1-05, parameters A1-01 through A1-03, A1-06, and A2-01 through A2-33 cannot be changed.	Default: 0000 Min: 0000 Max: 9999	132
A1-05 (105H)	Password Setting			
A1-06 (127H)	Application Preset	All Modes 0: General-purpose 1: Water supply pump 2: Conveyor 3: Exhaust fan 4: HVAC fan 5: Air compressor 6: Elevator 7: Hoist	Default: 0 Min: 0 Max: 7	134
A1-07 (128H)	DriveWorksEZ Function Selection	All Modes 0: DWEZ disabled 1: DWEZ enabled 2: Digital input (enabled when H1-□□ = 9F)	Default: 0 Min: 0 Max: 2	134

<2> Default setting value is dependent on the Application Preset selected with parameter A1-06.
<3> Parameter setting value is not reset to the default value when the drive is initialized.

■ A2: User Parameters

No.(Addr.)	Name	Description	Setting	Page
A2-01 to A2-32 (106 to 125H)	User Parameters 1 to 32	All Modes Parameters that were recently edited are listed here. The user can also select parameters to appear here for quick access.	Default: <2> Min: b1-01 Max: o2-08	135
A2-33 (126H)	User Parameter Automatic Selection	All Modes 0: Parameters A2-01 through A2-32 are reserved for the user to create a list of User Parameters. 1: Save history of recently viewed parameters. Recently edited parameters will be saved to A2-17 through A2-32 for quick access.	Default: 1 <1> Min: 0 Max: 1	135

<1> Default setting value is dependent on parameter A1-06. This setting value is 0 when A1-06 = 0, and 1 when A1-06 does not equal 0.
<2> Default setting value is determined by the Application Preset selected with parameter A1-06.

原廠手冊有限公司
購買、維修 此手冊零組件
電話: 037-466333
Email: service@repairtw.com
line id: @xxx
www.repairtw.com

◆ b: Application

Application parameters configure the source of the Run command, DC Injection Braking, Speed Search, timer functions, PID control, the Dwell function, Energy Savings, and a variety of other application-related settings.

■ b1: Operation Mode Selection

No.(Addr.)	Name	Description	Setting	Page
b1-01 (180H)	Frequency Reference Selection 1	All Modes 0: Digital operator 1: Analog input terminals 2: MEMOBUS/Modbus communications 3: Option PCB 4: Pulse input (terminal RP)	Default: 1 Min: 0 Max: 4	*136*
b1-02 (181H)	Run Command Selection 1	All Modes 0: Digital operator 1: Digital input terminals 2: MEMOBUS/Modbus communications 3: Option PCB	Default: 1 Min: 0 Max: 3	*137*
b1-03 (182H)	Stopping Method Selection	All Modes 0: Ramp to stop 1: Coast to stop 2: DC Injection Braking to stop 3: Coast with timer 9: Simple Positioning	Default: 0 Min: 0 Max: 9 *<11>*	*138*
b1-04 (183H)	Reverse Operation Selection	All Modes 0: Reverse enabled. 1: Reverse disabled.	Default: 0 Min: 0 Max: 1	*140*
b1-05 (184H)	Action Selection below Minimum Output Frequency	V/f V/f w/PG OLV CLV OLV/PM AOLV/PM CLV/PM 0: Operates according to frequency reference (E1-09 is disabled). 1: Output shuts off (coast to stop if less than E1-09). 2: Operates according to E1-09 (frequency reference set to E1-09). 3: Zero speed (frequency reference becomes zero when less than E1-09).	Default: 0 Min: 0 Max: 3	*140*
b1-06 (185H)	Digital Input Reading	All Modes 0: Input status is read once and processed immediately (for quick response) 1: Input is read twice and processed only if the status is the same in both readings (robust against noisy signals)	Default: 1 Min: 0 Max: 1	*142*
b1-07 (186H)	LOCAL/REMOTE Run Selection	All Modes 0: An external Run command has to be cycled at the new source to be activated. 1: An external Run command at new source is accepted immediately.	Default: 0 Min: 0 Max: 1	*142*
b1-08 (187H)	Run Command Selection while in Programming Mode	All Modes 0: Run command not accepted while in the Programming Mode. 1: Run command accepted while in the Programming Mode. 2: Prohibit entering Programming Mode during run.	Default: 0 Min: 0 Max: 2	*143*
b1-14 (1C3H)	Phase Order Selection	V/f V/f w/PG OLV CLV OLV/PM AOLV/PM CLV/PM 0: Standard 1: Switch phase order (reverses the direction of the motor)	Default: 0 Min: 0 Max: 1	*143*
b1-15 (1C4H)	Frequency Reference Selection 2	All Modes Enabled when an input terminal set for "External reference" (H1-□□ = 2) closes. 0: Digital operator 1: Terminals (analog input terminals) 2: MEMOBUS/Modbus communications 3: Option card 4: Pulse train input	Default: 0 Min: 0 Max: 4	*143*
b1-16 (1C5H)	Run Command Selection 2	All Modes Enabled when a terminal set for "External reference" (H1-□□ = 2) closes. 0: Digital operator 1: Digital input terminals 2: MEMOBUS/Modbus communications 3: Option card	Default: 0 Min: 0 Max: 3	*143*
b1-17 (1C6H)	Run Command at Power Up	All Modes 0: Disregarded. A new Run command needs to be issued after power up. 1: Allowed. Motor will start immediately after power up if a Run command is already enabled.	Default: 0 Min: 0 Max: 1	*143*

<11> Setting 2 and 3 are not available when using CLV.

上正科技有限公司 購買一批此型號零組件 電話： 057-466333 Email: service@repairtw.com Line id: @zzzz www.repairtw.com

■ b2: DC Injection Braking and Short Circuit Braking

No.(Addr.)	Name	Description	Setting	Page
b2-01 (189H)	DC Injection Braking Start Frequency	All Modes Sets the frequency at which DC Injection Braking starts when “Ramp to stop” (b1-03 = 0) is selected.	Default: <10> Min: 0.0 Hz Max: 10.0 Hz	144
b2-02 (18AH)	DC Injection Braking Current	V/f, V/f w/PG, OLV, CLV, OLV/PM, AOLV/PM, CLV/PM Sets the DC Injection Braking current as a percentage of the drive rated current.	Default: 50% Min: 0% Max: 100%	145
b2-03 (18BH)	DC Injection Braking Time at Start	All Modes Sets the time of DC Injection Braking (Zero Speed Control when in CLV and CLV/PM) time at start. Disabled when set to 0.00 s.	Default: 0.00 s Min: 0.00 s Max: 10.00 s	145
b2-04 (18CH)	DC Injection Braking Time at Stop	All Modes Sets the time of DC Injection Braking (Zero Speed Control when in CLV and CLV/PM) at stop.	Default: <10> Min: 0.00 s Max: 10.00 s	145
b2-08 (190H)	Magnetic Flux Compensation Value	V/f, V/f w/PG, OLV, CLV, OLV/PM, AOLV/PM, CLV/PM Sets the magnetic flux compensation as a percentage of the no-load current value (E2-03).	Default: 0% Min: 0% Max: 1000%	145
b2-12 (1BAH)	Short Circuit Brake Time at Start	V/f, V/f w/PG, OLV, CLV, OLV/PM, AOLV/PM, CLV/PM Sets the time for Short Circuit Braking operation at start. <7>	Default: 0.00 s Min: 0.00 s Max: 25.50 s	146
b2-13 (1BBH)	Short Circuit Brake Time at Stop	V/f, V/f w/PG, OLV, CLV, OLV/PM, AOLV/PM, CLV/PM Sets the Short Circuit Braking operation time at stop. <7>	Default: 0.50 s Min: 0.00 s Max: 25.50 s	146
b2-18 (177H)	Short Circuit Braking Current	V/f, V/f w/PG, OLV, CLV, OLV/PM, AOLV/PM, CLV/PM Determines the current level for Short Circuit Braking. Set as a percentage of the motor rated current.	Default: 100.0% Min: 0.0% Max: 200.0%	146

<7> A coasting motor may require a braking resistor circuit to bring the motor to a stop in the required time.
<10> Default setting is determined by the control mode (A1-02).

中正科技有限公司
購買、維修 此手冊零組件
電話： 037-466333
Email: service@repairtw.com
Line id: @zzzz
www.repairtw.com

■ b3: Speed Search

No.(Addr.)	Name	Description	Setting	Page
b3-01 (191H)	Speed Search Selection at Start	V/f, V/f w/PG, OLV, CLV, OLV/PM, AOLV/PM, CLV/PM 0: Disabled 1: Enabled	Default: <10> Min: 0 Max: 1	149
b3-02 (192H)	Speed Search Deactivation Current	V/f, V/f w/PG, OLV, CLV, OLV/PM, AOLV/PM, CLV/PM Sets the current level at which the speed is assumed to be detected and Speed Search is ended. Set as a percentage of the drive rated current.	Default: <10> Min: 0% Max: 200%	149
b3-03 (193H)	Speed Search Deceleration Time	V/f, V/f w/PG, OLV, CLV, OLV/PM, AOLV/PM, CLV/PM Sets output frequency reduction time during Speed Search.	Default: 2.0 s Min: 0.1 s Max: 10.0 s	149
b3-04 (194H)	V/f Gain during Speed Search	V/f, V/f w/PG, OLV, CLV, OLV/PM, AOLV/PM, CLV/PM Determines how much to lower the V/f ratio during Speed Search. Output voltage during Speed Search equals the V/f setting multiplied by b3-04.	Default: <9> Min: 10% Max: 100%	150
b3-05 (195H)	Speed Search Delay Time	All Modes When using an external contactor on the output side, b3-05 delays executing Speed Search after a momentary power loss to allow time for the contactor to close.	Default: 0.2 s Min: 0.0 s Max: 100.0 s	150
b3-06 (196H)	Output Current 1 during Speed Search	V/f, V/f w/PG, OLV, CLV, OLV/PM, AOLV/PM, CLV/PM Sets the current injected to the motor at the beginning of Speed Estimation Speed Search. Set as a coefficient for the motor rated current.	Default: <9> Min: 0.0 Max: 2.0	150
b3-10 (19AH)	Speed Search Detection Compensation Gain	V/f, V/f w/PG, OLV, CLV, OLV/PM, AOLV/PM, CLV/PM Sets the gain which is applied to the speed detected by Speed Estimation Speed Search before the motor is reaccelerated. Increase this setting if ov occurs when performing Speed Search after a relatively long period of baseblock.	Default: 1.05 Min: 1.00 Max: 1.20	150

No.(Addr.)	Name	Description	Setting	Page
b3-14 (19EH)	Bi-Directional Speed Search Selection	V/f, V/f w/PG, OLV, CLV, OLV/PM, AOLV/PM, CLV/PM 0: Disabled (uses the direction of the frequency reference) 1: Enabled (drive detects which way the motor is rotating)	Default: <10> Min: 0 Max: 1	150
b3-17 (1F0H)	Speed Search Restart Current Level	V/f, V/f w/PG, OLV, CLV, OLV/PM, AOLV/PM, CLV/PM Sets the Speed Search restart current level as a percentage of the drive rated current.	Default: 150% Min: 0% Max: 200%	150
b3-18 (1F1H)	Speed Search Restart Detection Time	V/f, V/f w/PG, OLV, CLV, OLV/PM, AOLV/PM, CLV/PM Sets the time to detect Speed Search restart.	Default: 0.10 s Min: 0.00 s Max: 1.00 s	151
b3-19 (1F2H)	Number of Speed Search Restarts	V/f, V/f w/PG, OLV, CLV, OLV/PM, AOLV/PM, CLV/PM Sets the number of times the drive can attempt to restart when performing Speed Search.	Default: 3 Min: 0 Max: 10	151
b3-24 (1C0H)	Speed Search Method Selection	V/f, V/f w/PG, OLV, CLV, OLV/PM, AOLV/PM, CLV/PM 0: Current Detection 1: Speed Estimation	Default: 0 Min: 0 Max: 1	151
b3-25 (1C8H)	Speed Search Wait Time	V/f, V/f w/PG, OLV, CLV, OLV/PM, AOLV/PM, CLV/PM Sets the time the must wait between each Speed Search restart attempt.	Default: 0.5 s Min: 0.0 s Max: 30.0 s	151

<9> Default setting value is dependent on the drive model (o2-04) and the Drive Duty (C6-01).
<10> Default setting is determined by the control mode (A1-02).

■ b4: Timer Function

上正科技有限公司
購買、維修 此手冊零組件
電話： 037-466313
Email: service@repairtw.com
Line id: @zzzz
www.repairtw.com

No.(Addr.)	Name	Description	Setting	Page
b4-01 (1A3H)	Timer Function On-Delay Time	All Modes Used to set the on-delay and off-delay times for a digital timer output (H2-□□=12). The output is triggered by a digital input programmed to H1-□□=18)	Default: 0.0 s Min: 0.0 s Max: 3000.0 s	151
b4-02 (1A4H)	Timer Function Off-Delay Time		Default: 0.0 s Min: 0.0 s Max: 3000.0 s	151

■ b5: PID Control

No.(Addr.)	Name	Description	Setting	Page
b5-01 (1A5H)	PID Function Setting	All Modes 0: Disabled 1: Enabled (PID output becomes output frequency reference, deviation D controlled) 2: Enabled (PID output becomes output frequency reference, feedback D controlled) 3: Enabled (PID output added to frequency reference, deviation D controlled) 4: Enabled (PID output added to frequency reference, feedback D controlled)	Default: 0 Min: 0 Max: 4	155
b5-02 (1A6H) RUN	Proportional Gain Setting (P)	All Modes Sets the proportional gain of the PID controller.	Default: 1.00 Min: 0.00 Max: 25.00	155
b5-03 (1A7H) RUN	Integral Time Setting (I)	All Modes Sets the integral time for the PID controller.	Default: 1.0 s Min: 0.0 s Max: 360.0 s	155
b5-04 (1A8H) RUN	Integral Limit Setting	All Modes Sets the maximum output possible from the integrator as a percentage of the maximum output frequency.	Default: 100.0% Min: 0.0% Max: 100.0%	155
b5-05 (1A9H) RUN	Derivative Time (D)	All Modes Sets D control derivative time.	Default: 0.00 s Min: 0.00 s Max: 10.00 s	155
b5-06 (1AAH) RUN	PID Output Limit	All Modes Sets the maximum output possible from the entire PID controller as a percentage of the maximum output frequency.	Default: 100.0% Min: 0.0% Max: 100.0%	155
b5-07 (1ABH) RUN	PID Offset Adjustment	All Modes Applies an offset to the PID controller output. Set as a percentage of the maximum output frequency.	Default: 0.0% Min: -100.0% Max: 100.0%	156
b5-08 (1ACH) RUN	PID Primary Delay Time Constant	All Modes Sets a low pass filter time constant on the output of the PID controller.	Default: 0.00 s Min: 0.00 s Max: 10.00 s	156

No.(Addr.)	Name	Description	Setting	Page
b5-09 (1ADH)	PID Output Level Selection	All Modes 0: Normal output (direct acting) 1: Reverse output (reverse acting)	Default: 0 Min: 0 Max: 1	156
b5-10 (1AEH)	PID Output Gain Setting	All Modes Sets the gain applied to the PID output.	Default: 1.00 Min: 0.00 Max: 25.00	156
b5-11 (1AFH)	PID Output Reverse Selection	All Modes 0: Negative PID output triggers zero limit. 1: Rotation direction reverses with negative PID output. When using setting 1, make sure reverse operation is permitted by parameter b1-04.	Default: 0 Min: 0 Max: 1	156
b5-12 (1B0H)	PID Feedback Loss Detection Selection	All Modes 0: No fault. Digital output only. 1: Fault detection. Alarm output, drive continues operation. 2: Fault detection. Fault output, drive output is shut off. 3: No fault. Digital output only. No fault detection when PID control is disabled. 4: Fault detection. Alarm is triggered and drive continues to run. Fault detection even when PID is disabled. 5: Fault detection. Drive output shuts off. No fault detection when PID control is disabled.	Default: 0 Min: 0 Max: 5	157
b5-13 (1B1H)	PID Feedback Loss Detection Level	All Modes Sets the PID feedback loss detection level as a percentage of the maximum output frequency.	Default: 0% Min: 0% Max: 100%	158
b5-14 (1B2H)	PID Feedback Loss Detection Time	All Modes Sets a delay time for PID feedback loss.	Default: 1.0 s Min: 0.0 s Max: 25.5 s	158
b5-15 (1B3H)	PID Sleep Function Start Level	All Modes Sets the frequency level that triggers the sleep function.	Default: 0.0 Hz Min: 0.0 Hz Max: 400.0 Hz	158
b5-16 (1B4H)	PID Sleep Delay Time	All Modes Sets a delay time before the sleep function is triggered.	Default: 0.0 s Min: 0.0 s Max: 25.5 s	159
b5-17 (1B5H)	PID Accel/Decel Time	All Modes Sets the acceleration and deceleration time to PID setpoint.	Default: 0.0 s Min: 0.0 s Max: 6000.0 s	159
b5-18 (1DCH)	PID Setpoint Selection	All Modes 0: Disabled 1: Enabled	Default: 0 Min: 0 Max: 1	159
b5-19 (1DDH)	PID Setpoint Value	All Modes Sets the PID target value when b5-18 = 1. Set as a percentage of the maximum output frequency.	Default: 0.00% Min: 0.00% Max: 100.00%	159
b5-20 (1E2H)	PID Setpoint Scaling	All Modes 0: 0.01Hz units 1: 0.01% units (100% = max output frequency) 2: r/min (number of motor poles must entered) 3: User-set (set scaling to b5-38 and b5-39)	Default: 1 Min: 0 Max: 3	159
b5-34 (19FH) RUN	PID Output Lower Limit	All Modes Sets the minimum output possible from the PID controller as a percentage of the maximum output frequency.	Default: 0.00% Min: -100.0% Max: 100.0%	160
b5-35 (1A0H) RUN	PID Input Limit	All Modes Limits the PID control input (deviation signal) as a percentage of the maximum output frequency. Acts as a bipolar limit.	Default: 1000.0% Min: 0% Max: 1000.0%	160
b5-36 (1A1H)	PID Feedback High Detection Level	All Modes Sets the PID feedback high detection level as a percentage of the maximum output frequency.	Default: 100% Min: 0% Max: 100%	158
b5-37 (1A2H)	PID Feedback High Detection Time	All Modes Sets the PID feedback high level detection delay time.	Default: 1.0 s Min: 0.0 s Max: 25.5 s	158
b5-38 (1FEH)	PID Setpoint User Display	All Modes Sets the display value of U5-01 and U5-04 when the maximum frequency is output.	Default: <5> Min: 1 Max: 60000	160
b5-39 (1FFH)	PID Setpoint Display Digits	All Modes 0: No decimal places 1: One decimal places 2: Two decimal places 3: Three decimal places	Default: <5> Min: 0 Max: 3	160
b5-40 (17FH)	Frequency Reference Monitor Content during PID	All Modes 0: Display the frequency reference (U1-01) after PID compensation has been added. 1: Display the frequency reference (U1-01) before PID compensation has been added.	Default: 0 Min: 0 Max: 1	160

上正科技有限公司
購買、維修 此手冊零組件
電話： 037-466333
Email: service@repairtw.com
line id: @zzzz
www.repairtw.com

<5> Default setting is dependent on PID setpoint scaling (b5-20).

■ b6: Dwell Function

No.(Addr.)	Name	Description	Setting	Page
b6-01 (1B6H)	Dwell Reference at Start	All Modes Parameters b6-01 and b6-02 set the frequency to hold and the time to maintain that frequency at start. Parameters b6-03 and b6-04 set the frequency to hold and the time to maintain that frequency at stop.	Default: 0.0 Hz Min: 0.0 Hz Max: 400.0 Hz	*161*
b6-02 (1B7H)	Dwell Time at Start		Default: 0.0 s Min: 0.0 s Max: 10.0 s	*161*
b6-03 (1B8H)	Dwell Reference at Stop		Default: 0.0 Hz Min: 0.0 Hz Max: 400.0 Hz	*161*
b6-04 (1B9H)	Dwell Time at Stop		Default: 0.0 s Min: 0.0 s Max: 10.0 s	*161*

■ b7: Droop Control

No.(Addr.)	Name	Description	Setting	Page
b7-01 (1CAH) RUN	Droop Control Gain	V/f V/f w/PG OLV **CLV** OLV/PM AOLV/PM **CLV/PM** Sets the speed reduction gain applied at a torque reference of 100%. Set as a percentage of motor base speed.	Default: 0.0% Min: 0.0% Max: 100.0%	*162*
b7-02 (1CBH) RUN	Droop Control Delay Time.	V/f V/f w/PG OLV **CLV** OLV/PM AOLV/PM **CLV/PM** Used to adjust the responsiveness of Droop Control.	Default: 0.05 s Min: 0.03 s Max: 2.00 s	*162*

■ b8: Energy Saving

No.(Addr.)	Name	Description	Setting	Page
b8-01 (1CCH)	Energy Saving Control Selection	**V/f** **V/f w/PG** **OLV** **CLV** OLV/PM **AOLV/PM** **CLV/PM** 0: Disabled 1: Enabled	Default: *<10>* Min: 0 Max: 1	*163*
b8-02 (1CDH) RUN	Energy Saving Gain	V/f V/f w/PG **OLV** **CLV** OLV/PM AOLV/PM CLV/PM Sets the gain used for Energy Saving.	Default: *<10>* Min: 0.0 Max: 10.0	*163*
b8-03 (1CEH) RUN	Energy Saving Control Filter Time Constant	V/f V/f w/PG **OLV** **CLV** OLV/PM AOLV/PM CLV/PM Sets a time constant for Energy Saving.	Default: *<4>* Min: 0.00 s Max: 10.00 s	*163*
b8-04 (1CFH)	Energy Saving Coefficient Value	**V/f** **V/f w/PG** OLV CLV OLV/PM AOLV/PM CLV/PM Determines the level of maximum motor efficiency. Setting range is 0.0 to 2000.0 maximum output up to 3.7 kW. The display resolution depends on the rated output power of the drive after the Drive Duty has been set in parameter C6-01. Refer to *Model Number and Nameplate Check on page 29*.	Default: *<8> <9>* Min: 0.00 Max: 655.00	*163*
b8-05 (1D0H)	Power Detection Filter Time	**V/f** **V/f w/PG** OLV CLV OLV/PM AOLV/PM CLV/PM Sets a time constant filter for output power detection.	Default: 20 ms Min: 0 ms Max: 2000 ms	*163*
b8-06 (1D1H)	Search Operation Voltage Limit	**V/f** **V/f w/PG** OLV CLV OLV/PM AOLV/PM CLV/PM Sets the limit for the voltage search operation as a percentage of the motor rated voltage.	Default: 0% Min: 0% Max: 100%	*164*

上正科技有限公司
購買、維修 此手冊零組件
電話： 037-466233
Email: service@repairtw.com
Line id: @zzzz
www.repairtw.com

<4> Default setting is dependent on the control mode (A1-02), the drive model (o2-04), and the Drive Duty (C6-01).
<8> Parameter value changes automatically if E2-11 is manually changed or changed by Auto-Tuning.
<9> Default setting value is dependent on the drive model (o2-04) and the Drive Duty (C6-01).
<10> Default setting is determined by the control mode (A1-02).

■ b9: Zero Servo

No.(Addr.)	Name	Description	Setting	Page
b9-01 (1DAH)	Zero Servo Gain	V/f V/f w/PG OLV **CLV** OLV/PM AOLV/PM **CLV/PM** Sets the position loop gain for the Zero Servo function.	Default: 5 Min: 0 Max: 100	*164*

No.(Addr.)	Name	Description	Setting	Page
b9-02 (1DBH)	Zero Servo Completion Width	V/f V/f w/PG OLV CLV OLV/PM AOLV/PM CLV/PM Sets the range to trigger an output terminal set for "Zero Servo Complete" during Zero Servo operation.	Default: 10 Min: 0 Max: 16383	164

◆ C: Tuning

C parameters are used to adjust the acceleration and deceleration times, S-curves, slip compensation, torque compensation, and carrier frequency selections.

■ C1: Acceleration and Deceleration Times

No.(Addr.)	Name	Description	Setting	Page
C1-01 (200H) RUN	Acceleration Time 1	All Modes Sets the time to accelerate from 0 to maximum frequency.		165
C1-02 (201H) RUN	Deceleration Time 1	All Modes Sets the time to decelerate from maximum frequency to 0.		165
C1-03 (202H) RUN	Acceleration Time 2	All Modes Sets the time to accelerate from 0 to maximum frequency.		165
C1-04 (203H) RUN	Deceleration Time 2	All Modes Sets the time to decelerate from maximum frequency to 0.		165
C1-05 (204H) RUN	Acceleration Time 3 (Motor 2 Accel Time 1)	All Modes Sets the time to accelerate from 0 to maximum frequency.	Default: 10.0 s Min: 0.0 s Max: 6000.0 s <12>	165
C1-06 (205H) RUN	Deceleration Time 3 (Motor 2 Decel Time 1)	All Modes Sets the time to decelerate from maximum frequency to 0.		165
C1-07 (206H) RUN	Acceleration Time 4 (Motor 2 Accel Time 2)	All Modes Sets the time to accelerate from 0 to maximum frequency.		165
C1-08 (207H) RUN	Deceleration Time 4 (Motor 2 Decel Time 2)	All Modes Sets the time to decelerate from maximum frequency to 0.		165
C1-09 (208H)	Fast Stop Time	All Modes Sets the time for the Fast Stop function.		166
C1-10 (209H)	Accel/Decel Time Setting Units	All Modes 0: 0.01 s (0.00 to 600.00 s) 1: 0.1 s (0.0 to 6000.0 s)	Default: 1 Min: 0 Max: 1	167
C1-11 (20AH)	Accel/Decel Time Switching Frequency	All Modes Sets the frequency to switch between accel/decel time settings	Default: 0.0 Hz Min: 0.0 Hz Max: 400.0 Hz	166

<12> Setting range value is dependent on parameter C1-10, Accel/Decel Time Setting Units. When C1-10 = 0 (units of 0.01 seconds), the setting range becomes 0.00 to 600.00 seconds.

■ C2: S-Curve Characteristics

No.(Addr.)	Name	Description	Setting	Page
C2-01 (20BH)	S-Curve Characteristic at Accel Start	All Modes The S-curve can be controlled at the four points shown below. 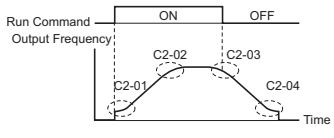 	Default: 0.20 s <10> Min: 0.00 s Max: 10.00 s	167
C2-02 (20CH)	S-Curve Characteristic at Accel End		Default: 0.20 s Min: 0.00 s Max: 10.00 s	167
C2-03 (20DH)	S-Curve Characteristic at Decel Start		Default: 0.20 s Min: 0.00 s Max: 10.00 s	167
C2-04 (20EH)	S-Curve Characteristic at Decel End		Default: 0.00 s Min: 0.00 s Max: 10.00 s	167

<10> Default setting is determined by the control mode (A1-02).

上正科技有限公司
購買、維修 此手冊零組件
電話： 037-466333
Email: service@repairtw.com
Line Id: @2222
www.repairtw.com

■ C3: Slip Compensation

No.(Addr.)	Name	Description	Setting	Page
C3-01 (20FH) RUN	Slip Compensation Gain	V/f V/f w/PG OLV CLV OLV/PM AOLV/PM CLV/PM Sets the gain for the motor slip compensation function used for motor 1.	Default: <10> Min: 0.0 Max: 2.5	167
C3-02 (210H) RUN	Slip Compensation Primary Delay Time	V/f V/f w/PG OLV CLV OLV/PM AOLV/PM CLV/PM Adjusts the slip compensation function delay time used for motor 1.	Default: <10> Min: 0 ms Max: 10000 ms	168
C3-03 (211H)	Slip Compensation Limit	V/f V/f w/PG OLV CLV OLV/PM AOLV/PM CLV/PM Sets an upper limit for the slip compensation function as a percentage of motor rated slip for motor 1 (E2-02).	Default: 200% Min: 0% Max: 250%	168
C3-04 (212H)	Slip Compensation Selection during Regeneration	V/f V/f w/PG OLV CLV OLV/PM AOLV/PM CLV/PM 0: Disabled. 1: Enabled above 6 Hz. 2: Enabled whenever slip compensation is possible.	Default: 0 Min: 0 Max: 2	168
C3-05 (213H)	Output Voltage Limit Operation Selection	V/f V/f w/PG OLV CLV OLV/PM AOLV/PM CLV/PM 0: Disabled. 1: Enabled. Automatically decreases motor flux when output voltage saturation is reached.	Default: 0 Min: 0 Max: 1	169
C3-21 (33EH) RUN	Motor 2 Slip Compensation Gain	V/f V/f w/PG OLV CLV OLV/PM AOLV/PM CLV/PM Sets the slip compensation gain used for motor 2.	Default: <15> Min: 0.0 Max: 2.5	169
C3-22 (241H) RUN	Motor 2 Slip Compensation Primary Delay Time	V/f V/f w/PG OLV CLV OLV/PM AOLV/PM CLV/PM Sets the slip compensation delay time used for motor 2.	Default: <15> Min: 0 ms Max: 10000 ms	169
C3-23 (242H)	Motor 2 Slip Compensation Limit	V/f V/f w/PG OLV CLV OLV/PM AOLV/PM CLV/PM Sets the upper limit for the slip compensation function for motor 2. Set as a percentage of the motor rated slip (E4-02).	Default: 200% Min: 0% Max: 250%	169
C3-24 (243H)	Motor 2 Slip Compensation Selection During Regeneration	V/f V/f w/PG OLV CLV OLV/PM AOLV/PM CLV/PM 0: Disabled. 1: Enabled above 6 Hz. 2: Enabled whenever slip compensation is possible.	Default: 0 Min: 0 Max: 2	170

<10> Default setting is determined by the control mode (A1-02).
<15> Default setting is determined by the control mode for motor 2 (E3-01).

■ C4: Torque Compensation

No.(Addr.)	Name	Description	Setting	Page
C4-01 (215H) RUN	Torque Compensation Gain	V/f V/f w/PG OLV CLV OLV/PM AOLV/PM CLV/PM Sets the gain for the automatic torque (voltage) boost function and helps to produce better starting torque. Used for motor 1.	Default: <10> Min: 0.00 Max: 2.50	170
C4-02 (216H) RUN	Torque Compensation Primary Delay Time 1	V/f V/f w/PG OLV CLV OLV/PM AOLV/PM CLV/PM Sets the torque compensation filter time.	Default: <16> Min: 0 ms Max: 60000 ms	170
C4-03 (217H)	Torque Compensation at Forward Start	V/f V/f w/PG OLV CLV OLV/PM AOLV/PM CLV/PM Sets torque compensation at forward start as a percentage of motor torque.	Default: 0.0% Min: 0.0% Max: 200.0%	171
C4-04 (218H)	Torque Compensation at Reverse Start	V/f V/f w/PG OLV CLV OLV/PM AOLV/PM CLV/PM Sets torque compensation at reverse start as a percentage of motor torque.	Default: 0.0% Min: -200.0% Max: 0.0%	171
C4-05 (219H)	Torque Compensation Time Constant	V/f V/f w/PG OLV CLV OLV/PM AOLV/PM CLV/PM Sets the time constant for torque compensation at forward start and reverse start (C4-03 and C4-04).	Default: 10 ms Min: 0 ms Max: 200 ms	171

上正科技有限公司
購買、維修此手冊零組件
電話：037-466333
Email: service@repairtw.com
Line id: @zzzz
www.repairtw.com

No.(Addr.)	Name	Description	Setting	Page
C4-06 (21AH)	Torque Compensation Primary Delay Time 2	V/f V/f w/PG **OLV** CLV OLV/PM AOLV/PM CLV/PM Sets the torque compensation time 2.	Default: 150 ms Min: 0 ms Max: 10000 ms	*171*
C4-07 (341H) RUN	Motor 2 Torque Compensation Gain	**V/f** **V/f w/PG** **OLV** CLV OLV/PM AOLV/PM CLV/PM Sets the torque compensation gain used for motor 2.	Default: 1.00 Min: 0.00 Max: 2.50	*171*

<10> Default setting is determined by the control mode (A1-02).
<16> Default setting is determined by the control mode (A1-02) and the drive model (o2-04).

■ C5: Automatic Speed Regulator (ASR)

No.(Addr.)	Name	Description	Setting	Page
C5-01 (21BH) RUN	ASR Proportional Gain 1	V/f **V/f w/PG** OLV **CLV** OLV/PM **AOLV/PM** **CLV/PM** Sets the proportional gain of the speed control loop (ASR).	Default: *<10>* Min: 0.00 Max: 300.00 *<17>*	*173*
C5-02 (21CH) RUN	ASR Integral Time 1	V/f **V/f w/PG** OLV **CLV** OLV/PM **AOLV/PM** **CLV/PM** Sets the integral time of the speed control loop (ASR).	Default: *<10>* Min: 0.000 s Max: 10.000 s	*173*
C5-03 (21DH) RUN	ASR Proportional Gain 2	V/f **V/f w/PG** OLV **CLV** OLV/PM **AOLV/PM** **CLV/PM** Sets the speed control gain 2 of the speed control loop (ASR).	Default: *<10>* Min: 0.00 Max: 300.00 *<17>*	*173*
C5-04 (21EH) RUN	ASR Integral Time 2	V/f **V/f w/PG** OLV **CLV** OLV/PM **AOLV/PM** **CLV/PM** Sets the integral time 2 of the speed control loop (ASR).	Default: *<10>* Min: 0.000 s Max: 10.000 s	*173*
C5-05 (21FH)	ASR Limit	V/f **V/f w/PG** OLV CLV OLV/PM AOLV/PM CLV/PM Sets the upper limit for the speed control loop (ASR) as a percentage of the maximum output frequency (E1-04).	Default: 5.0% Min: 0.0% Max: 20.0%	*174*
C5-06 (220H)	ASR Primary Delay Time Constant	V/f V/f w/PG OLV **CLV** OLV/PM **AOLV/PM** **CLV/PM** Sets the filter time constant for the time from the speed loop to the torque command output.	Default: *<10>* Min: 0.000 s Max: 0.500 s	*174*
C5-07 (221H)	ASR Gain Switching Frequency	V/f V/f w/PG OLV **CLV** OLV/PM **AOLV/PM** **CLV/PM** Sets the frequency for switching between proportional gain 1, 2 and integral time 1, 2.	Default: 0.0 Hz Min: 0.0 Hz Max: 400.0 Hz	*175*
C5-08 (222H)	ASR Integral Limit	V/f V/f w/PG OLV **CLV** OLV/PM **AOLV/PM** **CLV/PM** Sets the ASR integral upper limit as a percentage of rated load torque.	Default: 400% Min: 0% Max: 400%	*175*
C5-12 (386H)	Integral Operation during Accel/ Decel	V/f **V/f w/PG** OLV CLV OLV/PM AOLV/PM CLV/PM 0: Disabled. Integral functions are enabled only during constant speed. 1: Enabled. Integral functions are always enabled, during accel/decel and during constant speed.	Default: 0 Min: 0 Max: 1	*175*
C5-17 (276H)	Motor Inertia	V/f V/f w/PG OLV **CLV** OLV/PM AOLV/PM **CLV/PM** Sets the motor inertia. This value is automatically set during ASR or Inertia Auto-Tuning.	Default: *<9>* *<14>* Min: 0.0001 kgm^2 Max: 600.00 kgm^2	*175*
C5-18 (277H)	Load Inertia Ratio	V/f V/f w/PG OLV **CLV** OLV/PM AOLV/PM **CLV/PM** Sets the ratio between the motor and load inertia. This value is automatically set during ASR or Inertia Auto-Tuning.	Default: 1.0 Min: 0.0 Max: 6000.0	*175*
C5-21 (356H) RUN	Motor 2 ASR Proportional Gain 1	V/f **V/f w/PG** OLV **CLV** OLV/PM AOLV/PM CLV/PM Sets the proportional gain of the speed control loop (ASR) for motor 2.	Default: *<15>* Min: 0.00 Max: 300.00 *<17>*	*175*
C5-22 (357H) RUN	Motor 2 ASR Integral Time 1	V/f **V/f w/PG** OLV **CLV** OLV/PM AOLV/PM CLV/PM Sets the integral time of the speed control loop (ASR) for motor 2.	Default: *<15>* Min: 0.000 s Max: 10.000 s	*175*
C5-23 (358H) RUN	Motor 2 ASR Proportional Gain 2	V/f **V/f w/PG** OLV **CLV** OLV/PM AOLV/PM CLV/PM Sets the speed control gain 2 of the speed control loop (ASR) for motor 2.	Default: *<15>* Min: 0.00 Max: 300.00 *<17>*	*175*

上此科技有限公司
購買、維修 此手冊零組件
電話： 037-466333
Email: service@repairtw.com
Line id: @zzzz
www.repairtw.com

No.(Addr.)	Name	Description	Setting	Page
C5-24 (359H) RUN	Motor 2 ASR Integral Time 2	V/f V/f w/PG OLV CLV OLV/PM AOLV/PM CLV/PM Sets the integral time 2 of the speed control loop (ASR) for motor 2.	Default: <15> Min: 0.000 s Max: 10.000 s	175
C5-25 (35AH)	Motor 2 ASR Limit	V/f V/f w/PG OLV CLV OLV/PM AOLV/PM CLV/PM Sets the upper limit for the speed control loop (ASR) for motor 2 as a percentage of the maximum output frequency (E3-04).	Default: 5.0% Min: 0.0% Max: 20.0%	176
C5-26 (35BH)	Motor 2 ASR Primary Delay Time Constant	V/f V/f w/PG OLV CLV OLV/PM AOLV/PM CLV/PM Sets the filter time constant for the time from the speed loop to the torque command output used for motor 2.	Default: <15> Min: 0.000 s Max: 0.500 s	176
C5-27 (35CH)	Motor 2 ASR Gain Switching Frequency	V/f V/f w/PG OLV CLV OLV/PM AOLV/PM CLV/PM Sets the frequency for motor 2 used to switch between proportional gain 1 and 2, and between the integral time 1 and 2.	Default: 0.0 Hz Min: 0.0 Hz Max: 400.0 Hz	176
C5-28 (35DH)	Motor 2 ASR Integral Limit	V/f V/f w/PG OLV CLV OLV/PM AOLV/PM CLV/PM Sets the ASR integral upper limit for motor 2 as a percentage of rated load torque.	Default: 400% Min: 0% Max: 400%	176
C5-32 (361H)	Integral Operation during Accel/ Decel for Motor 2	V/f V/f w/PG OLV CLV OLV/PM AOLV/PM CLV/PM 0: Disabled. Integral functions for motor 2 are enabled only during constant speed. 1: Enabled. Integral functions are always enabled for motor 2, during accel/decel and during constant speed.	Default: 0 Min: 0 Max: 1	176
C5-37 (278H)	Motor 2 Inertia	V/f V/f w/PG OLV CLV OLV/PM AOLV/PM CLV/PM Sets the inertia of motor 2 alone without the load. This value is automatically set during ASR or Inertia Auto-Tuning.	Default: <9> Min: 0.0001 kgm^2 Max: 600.00 kgm^2	177
C5-38 (279H)	Motor 2 Load Inertia Ratio	V/f V/f w/PG OLV CLV OLV/PM AOLV/PM CLV/PM Sets the ratio between the motor 2 and machine inertia. This value is automatically set during ASR or Inertia Auto-Tuning.	Default: 1.0 Min: 0.0 Max: 6000.0	177

上正科技有限公司
購買、維修 此手冊零組件
電話：037-466333
Email：service@repairtw.com
www.repairtw.com

<9> Default setting is dependent on the control mode (A1-02), the drive model (o2-04), and the Drive Duty (C6-01).
<10> Default setting is determined by the control mode (A1-02).
<14> Default setting value is dependent on the motor code set to E5-01.
<15> Default setting is determined by the control mode for motor 2 (E3-01).
<17> The setting range is 1.00 to 300.0 in CLV and AOLV/PM.

■ C6: Carrier Frequency

No.(Addr.)	Name	Description	Setting	Page
C6-01 (223H)	Drive Duty Selection	All Modes 0: Heavy Duty (HD) for constant torque applications. 1: Normal Duty (ND) for variable torque applications.	Default: 0 Min: 0 Max: 1	177
C6-02 (224H)	Carrier Frequency Selection	All Modes 1: 2.0 kHz 2: 5.0 kHz 3: 8.0 kHz 4: 10.0 kHz 5: 12.5 kHz 6: 15.0 kHz 7: Swing PWM1 (Audible sound 1) 8: Swing PWM2 (Audible sound 2) 9: Swing PWM3 (Audible sound 3) A: Swing PWM4 (Audible sound 4) B to E: No setting possible F: User defined (determined by C6-03 through C6-05)	Default: <4> Min: 1 Max: F	177

No.(Addr.)	Name	Description	Setting	Page
C6-03 (225H)	Carrier Frequency Upper Limit	All Modes **Note:** C6-04 and C6-05 are available only in V/f and V/f w/PG control modes. Determines the upper and lower limits for the carrier frequency. In OLV, C6-03 determines the upper limit of the carrier frequency. 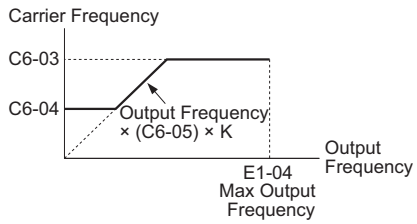 	Default: <13> Min: 1.0 kHz Max: 15.0 kHz	178
C6-04 (226H)	Carrier Frequency Lower Limit		Default: <13> Min: 1.0 kHz Max: 15.0 kHz	178
C6-05 (227H)	Carrier Frequency Proportional Gain		Default: <13> Min: 0 Max: 99	178
C6-09 (22BH)	Carrier Frequency during Rotational Auto-Tuning	V/f V/f w/PG OLV CLV OLV/PM AOLV/PM CLV/PM 0: Carrier Frequency = 5 kHz 1: Setting value for C6-03	Default: 0 Min: 0 Max: 1	179

<4> Default setting is dependent on the control mode (A1-02), the drive model (o2-04), and the Drive Duty (C6-01).
<13> Default setting value is dependent on the carrier frequency selection (C6-02).

上正科技有限公司
購買、維修 此手冊零組件
電話： 037-466333
Email: service@repairtw.com
Line id: @zzzz
www.repairtw.com

◆ d: References

Reference parameters are used to set the various frequency reference values during operation.

■ d1: Frequency Reference

No.(Addr.)	Name	Description	Setting	Page
d1-01 (280H) RUN	Frequency Reference 1	All Modes Sets the frequency reference for the drive. Setting units are determined by parameter o1-03.	Default: 0.00 Hz Min: 0.00 Hz Max: 400.00 Hz <20> <26>	180
d1-02 (281H) RUN	Frequency Reference 2			180
d1-03 (282H) RUN	Frequency Reference 3			180
d1-04 (283H) RUN	Frequency Reference 4			180
d1-05 (284H) RUN	Frequency Reference 5			180
d1-06 (285H) RUN	Frequency Reference 6			180
d1-07 (286H) RUN	Frequency Reference 7			180
d1-08 (287H) RUN	Frequency Reference 8			180
d1-09 (288H) RUN	Frequency Reference 9			180
d1-10 (28BH) RUN	Frequency Reference 10			180
d1-11 (28CH) RUN	Frequency Reference 11			180
d1-12 (28DH) RUN	Frequency Reference 12			180
d1-13 (28EH) RUN	Frequency Reference 13			180
d1-14 (28FH) RUN	Frequency Reference 14			180
d1-15 (290H) RUN	Frequency Reference 15			180
d1-16 (291H) RUN	Frequency Reference 16			180
d1-17 (292H) RUN	Jog Frequency Reference	All Modes Sets the jog frequency reference. Setting units are determined by parameter o1-03.	Default: 6.00 Hz Min: 0.00 Hz Max: 400.00 Hz <20> <26>	180

上正科技有限公司
購買、維修 此手冊零組件
電話： 037-466333
Email: service@repairtw.com
Line id: @zzzz
www.repairtw.com

<20> Range upper limit is determined by the maximum output frequency (E1-04) and the upper limit of the frequency reference (d2-01).
<26> The setting range is 0.0 to 66.0 in AOLV/PM.

■ d2: Frequency Upper/Lower Limits

No.(Addr.)	Name	Description	Setting	Page
d2-01 (289H)	Frequency Reference Upper Limit	All Modes Sets the frequency reference upper limit as a percentage of the maximum output frequency.	Default: 100.0% Min: 0.0% Max: 110.0%	182
d2-02 (28AH)	Frequency Reference Lower Limit	All Modes Sets the frequency reference lower limit as a percentage of the maximum output frequency.	Default: 0.0% Min: 0.0% Max: 110.0%	182
d2-03 (293H)	Master Speed Reference Lower Limit	All Modes Sets the lower limit for frequency references from analog inputs as a percentage of the maximum output frequency.	Default: 0.0% Min: 0.0 Max: 110.0%	182

■ d3: Jump Frequency

No.(Addr.)	Name	Description	Setting	Page
d3-01 (294H)	Jump Frequency 1	All Modes Eliminates problems with resonant vibration of the motor/machine by avoiding continuous operation in predefined frequency ranges. The drive accelerates and decelerates the motor through the prohibited frequency ranges. Setting 0.0 disables this function. Parameters must be set so that d3-01 ≥ d3-02 ≥ d3-03.	Default: 0.0 Hz Min: 0.0 Hz Max: 400.0 Hz	182
d3-02 (295H)	Jump Frequency 2			182
d3-03 (296H)	Jump Frequency 3			182
d3-04 (297H)	Jump Frequency Width	All Modes Sets the dead-band width around each selected prohibited frequency reference point.	Default: <10> Min: 0.0 Hz Max: 20.0 Hz	182

<10> Default setting is determined by the control mode (A1-02).

■ d4: Frequency Reference Hold and Up/Down 2 Function

No.(Addr.)	Name	Description	Setting	Page
d4-01 (298H)	Frequency Reference Hold Function Selection	All Modes 0: Disabled. Drive starts from zero when the power is switched on. 1: Enabled. At power up, the drive starts the motor at the Hold frequency that was saved.	Default: 0 Min: 0 Max: 1	183
d4-03 (2AAH) RUN	Frequency Reference Bias Step (Up/Down 2)	All Modes Sets the bias added to the frequency reference when the Up 2 and Down 2 digital inputs are enabled (H1-□□ = 75, 76).	Default: 0.00 Hz Min: 0.00 Hz Max: 99.99 Hz	185
d4-04 (2ABH) RUN	Frequency Reference Bias Accel/Decel (Up/Down 2)	All Modes 0: Use selected accel/decel time. 1: Use accel/decel time 4 (C1-07 and C1-08).	Default: 0 Min: 0 Max: 1	185
d4-05 (2ACH) RUN	Frequency Reference Bias Operation Mode Selection (Up/Down 2)	All Modes 0: Bias value is held if no input Up 2 or Down 2 is active. 1: When the Up 2 reference and Down 2 reference are both on or both off, the applied bias becomes 0. The specified accel/decel times are used for acceleration or deceleration.	Default: 0 Min: 0 Max: 1	186
d4-06 (2ADH)	Frequency Reference Bias (Up/Down 2)	All Modes The Up/Down 2 bias value is saved in d4-06 when the frequency reference is not input by the digital operator. Set as a percentage of the maximum output frequency.	Default: 0.0% Min: -99.9% Max: 100.0%	186
d4-07 (2AEH) RUN	Analog Frequency Reference Fluctuation Limit (Up/Down 2)	All Modes Limits how much the frequency reference is allowed to change while an input terminal set for Up 2 or Down 2 is enabled. If the frequency reference changes for more than the set value, then the bias value is held and the drive accelerates or decelerates to the frequency reference. Set as a percentage of the maximum output frequency.	Default: 1.0% Min: 0.1% Max: 100.0%	186
d4-08 (2AFH) RUN	Frequency Reference Bias Upper Limit (Up/Down 2)	All Modes Sets the upper limit for the bias and the value that can be saved in d4-06. Set as a percentage of the maximum output frequency.	Default: 0.0% Min: 0.0% Max: 100.0%	187
d4-09 (2B0H) RUN	Frequency Reference Bias Lower Limit (Up/Down 2)	All Modes Sets the lower limit for the bias and the value that can be saved in d4-06. Set as a percentage of the maximum output frequency.	Default: 0.0% Min: -99.9% Max: 0.0%	187
d4-10 (2B6H)	Up/Down Frequency Reference Limit Selection	All Modes 0: The lower limit is determined by d2-02 or an analog input. 1: The lower limit is determined by d2-02.	Default: 0 Min: 0 Max: 1	187
d4-11 (2B6H)	Bi-Directional Output Selection	All Modes Enables or disables the conversion of frequency reference or PID output value into bi-directional internal frequency reference. 0: Disabled- Operation in the selected direction between 0 to 100% frequency. reference or PID output 1: Enabled - Operation in reverse direction when frequency reference or PID output <50%, else operation in the selected direction.	Default: 0 Min: 0 Max: 1	187

上正科技有限公司
維修 電話： 037-466333
Email: service@repairtw.com
www.repairtw.com

No.(Addr.)	Name	Description	Setting	Page
d4-12 (2B6H)	Stop Position Gain	All Modes Sets the gain used by the simple positioning stop function in order to fine adjust the position.	Default: 1.00 Min: 0.50 Max: 2.50	188

■ d5: Torque Control

No.(Addr.)	Name	Description	Setting	Page
d5-01 (29AH)	Torque Control Selection	V/f V/f w/PG OLV CLV OLV/PM AOLV/PM CLV/PM 0: Speed Control 1: Torque Control Set to 0 when using a digital input to switch between Speed and Torque Control (H1-□□ = 71).	Default: 0 Min: 0 Max: 1	191
d5-02 (29BH)	Torque Reference Delay Time	V/f V/f w/PG OLV CLV OLV/PM AOLV/PM CLV/PM Sets a delay time for the torque reference signal. Used to suppress effects by noisy or fluctuating torque reference signals.	Default: 0 ms Min: 0 ms Max: 1000 ms	191
d5-03 (29CH)	Speed Limit Selection	V/f V/f w/PG OLV CLV OLV/PM AOLV/PM CLV/PM 1: Limit set by the frequency reference in b1-01. 2: Limit set by d5-04.	Default: 1 Min: 1 Max: 2	191
d5-04 (29DH)	Speed Limit	V/f V/f w/PG OLV CLV OLV/PM AOLV/PM CLV/PM Sets the speed limit during Torque Control as a percentage of the maximum output frequency. Enabled when d5-03 = 2. A negative setting set a limit in the opposite direction of the Run command.	Default: 0% Min: -120% Max: 120%	191
d5-05 (29EH)	Speed Limit Bias	V/f V/f w/PG OLV CLV OLV/PM AOLV/PM CLV/PM Sets the speed limit bias as a percentage of the maximum output frequency. The bias is applied to the specified speed limit and can adjust the margin for the speed limit.	Default: 10% Min: 0% Max: 120%	192
d5-06 (29FH)	Speed/Torque Control Switchover Time	V/f V/f w/PG OLV CLV OLV/PM AOLV/PM CLV/PM Sets the delay time for switching between Speed and Torque Control using an input terminal (H1-□□ = 71). Reference values are held during this switch delay time.	Default: 0 ms Min: 0 ms Max: 1000 ms	192
d5-08 (2B5H)	Unidirectional Speed Limit Bias	V/f V/f w/PG OLV CLV OLV/PM AOLV/PM CLV/PM 0: Disabled 1: Enabled	Default: 1 Min: 0 Max: 1	192

上正科技有限公司
購買、維修 此手冊零組件
電話： 037-466333
Email: service@repairtw.com
Line id: @zzzz
www.repairtw.com

■ d6: Field Weakening and Field Forcing

No.(Addr.)	Name	Description	Setting	Page
d6-01 (2A0H)	Field Weakening Level	V/f V/f w/PG OLV CLV OLV/PM AOLV/PM CLV/PM Sets the drive output voltage for the Field Weakening function as a percentage of the maximum output voltage. Enabled when a multi-function input is set for Field Weakening (H1-□□ = 63).	Default: 80% Min: 0% Max: 100%	192
d6-02 (2A1H)	Field Weakening Frequency Limit	V/f V/f w/PG OLV CLV OLV/PM AOLV/PM CLV/PM Sets the lower limit of the frequency range where Field Weakening control is valid. The Field Weakening command is valid only at frequencies above this setting and only when the output frequency matches the frequency reference (speed agree).	Default: 0.0 Hz Min: 0.0 Hz Max: 400.0 Hz	192
d6-03 (2A2H)	Field Forcing Selection	V/f V/f w/PG OLV CLV OLV/PM AOLV/PM CLV/PM 0: Disabled 1: Enabled	Default: 0 Min: 0 Max: 1	192
d6-06 (2A5H)	Field Forcing Limit	V/f V/f w/PG OLV CLV OLV/PM AOLV/PM CLV/PM Sets the upper limit of the excitation current command during magnetic field forcing. A setting of 100% is equal to motor no-load current. Disabled only during DC Injection Braking.	Default: 400% Min: 100% Max: 400%	193

■ d7: Offset Frequency

No.(Addr.)	Name	Description	Setting	Page
d7-01 (2B2H) RUN	Offset Frequency 1	All Modes Added to the frequency reference when the digital input "Frequency offset 1" (H1-□□ = 44) is switched on.	Default: 0.0% Min: -100.0% Max: 100.0%	193
d7-02 (2B3H) RUN	Offset Frequency 2	All Modes Added to the frequency reference when the digital input "Frequency offset 2" (H1-□□ = 45) is switched on.	Default: 0.0% Min: -100.0% Max: 100.0%	193
d7-03 (2B4H) RUN	Offset Frequency 3	All Modes Added to the frequency reference when the digital input "Frequency offset 3" (H1-□□ = 46) is switched on.	Default: 0.0% Min: -100.0% Max: 100%	193

◆ E: Motor Parameters

■ E1: V/f Pattern for Motor 1

No.(Addr.)	Name	Description	Setting	Page
E1-01 (300H)	Input Voltage Setting	All Modes This parameter must be set to the power supply voltage. **WARNING!** Drive input voltage (not motor voltage) must be set in E1-01 for the protective features of the drive to function properly. Failure to do so may result in equipment damage and/or death or personal injury.	Default: 200 V <18> Min: 155 V Max: 255 V	194
E1-03 (302H)	V/f Pattern Selection	V/f V/f w/PG OLV CLV OLV/PM AOLV/PM CLV/PM 0: 50 Hz, Constant torque 1 1: 60 Hz, Constant torque 2 2: 60 Hz, Constant torque 3 (50 Hz base) 3: 72 Hz, Constant torque 4 (60 Hz base) 4: 50 Hz, Variable torque 1 5: 50 Hz, Variable torque 2 6: 60 Hz, Variable torque 3 7: 60 Hz, Variable torque 4 8: 50 Hz, High starting torque 1 9: 50 Hz, High starting torque 2 A: 60 Hz, High starting torque 3 B: 60 Hz, High starting torque 4 C: 90 Hz (60 Hz base) D: 120 Hz (60 Hz base) E: 180 Hz (60 Hz base) F: Custom V/f, E1-04 through E1-13 settings define the V/f pattern	Default: F <3> Min: 0 Max: F <30>	194
E1-04 (303H)	Maximum Output Frequency	All Modes These parameters are only applicable when E1-03 is set to F. To set linear V/f characteristics, set the same values for E1-07 and E1-09. In this case, the setting for E1-08 will be disregarded. Ensure that the four frequencies are set according to these rules: E1-09 ≤ E1-07 < E1-06 ≤ E1–11 ≤ E1-04 Note that if E1-11 = 0, then both E1-11 and E1-12 are disabled, and the above conditions do not apply. 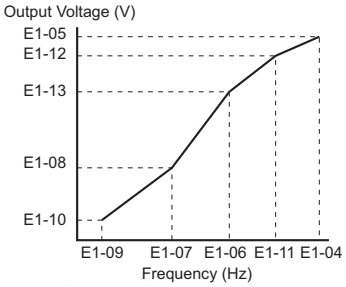 **Note:** Some parameters may not be available depending on the control mode. • E1-07, E1-08 and E-10 are available only in the following control modes: V/f Control, V/f with PG, Open Loop Vector. • E1-11, E1-12 and E-13 are available only in the following control modes: V/f Control, V/f with PG, Open Loop Vector, Closed Loop Vector.	Default: <4> <14> Min: 40.0 Max: 400.0 <29>	197
E1-05 (304H)	Maximum Voltage		Default: <4> <14> <18> Min: 0.00 V Max: 255.0 V <18>	197
E1-06 (305H)	Base Frequency		Default: <4> <14> Min: 0.0 Max: E1-04 <29>	197
E1-07 (306H)	Middle Output Frequency		Default: <4> Min: 0.0 Max: E1-04	197
E1-08 (307H)	Middle Output Frequency Voltage		Default: <4> <18> Min: 0.0 V Max: 255.0 V <18>	197
E1-09 (308H)	Minimum Output Frequency		Default: <4> <14> Min: 0.0 Max: E1-04 <26> <29>	197
E1-10 (309H)	Minimum Output Frequency Voltage		Default: <4> <18> Min: 0.0 V Max: 255.0 V <18>	197
E1-11 (30AH) <21>	Middle Output Frequency 2		Default: 0.0 Hz Min: 0.0 Max: E1-04 <26>	197
E1-12 (30BH) <21>	Middle Output Frequency Voltage 2		Default: 0.0 V Min: 0.0 V Max: 255.0 V <18>	197
E1-13 (30CH)	Base Voltage		Default: 0.0 V <18> <27> Min: 0.0 V Max: 255.0 V <18>	197

中日興科有限公司 海電維修 此手冊零組件 037-466333 Email: service@repairtw.com Line ID: @zzzz www.repairtw.com

<3> Parameter setting value is not reset to the default value when the drive is initialized.
<4> Default setting is dependent on the control mode (A1-02), the drive model (o2-04), and the Drive Duty (C6-01).
<14> Default setting value is dependent on the motor code set to E5-01.

<18> Values shown here are for 200 V class drives. Double the value when using a 400 V class drive.
<21> Parameter ignored when E1-11 (Motor 1 Mid Output Frequency 2) and E1-12 (Motor 1 Mid Output Frequency Voltage 2) are set to 0.0.
<26> The setting range is 0.0 to 66.0 in AOLV/PM.
<27> When Auto-Tuning is performed, E1-13 and E1-05 will be set to the same value.
<29> The setting range varies according to the motor code entered to E5-01 when using OLV/PM. The setting range is 0.0 to 400.0 Hz when E5-01 is set to FFFFH.
<30> The setting value is F in OLV.

■ E2: Motor 1 Parameters

No.(Addr.)	Name	Description	Setting	Page
E2-01 (30EH)	Motor Rated Current	V/f V/f w/PG OLV CLV OLV/PM AOLV/PM CLV/PM Sets the motor nameplate full load current in Amps. Automatically set during Auto-Tuning.	Default: <9> Min: 10% of drive rated current Max: 200% of drive rated current <19>	198
E2-02 (30FH)	Motor Rated Slip	V/f V/f w/PG OLV CLV OLV/PM AOLV/PM CLV/PM Sets the motor rated slip. Automatically set during Auto-Tuning.	Default: <9> Min: 0.00 Hz Max: 20.00 Hz	198
E2-03 (310H)	Motor No-Load Current	V/f V/f w/PG OLV CLV OLV/PM AOLV/PM CLV/PM Sets the no-load current for the motor. Automatically set during Auto-Tuning.	Default: <9> Min: 0 A Max: E2-01 <19>	199
E2-04 (311H)	Number of Motor Poles	V/f V/f w/PG OLV CLV OLV/PM AOLV/PM CLV/PM Sets the number of motor poles. Automatically set during Auto-Tuning.	Default: 4 Min: 2 Max: 48	199
E2-05 (312H)	Motor Line-to-Line Resistance	V/f V/f w/PG OLV CLV OLV/PM AOLV/PM CLV/PM Sets the phase-to-phase motor resistance. Automatically set during Auto-Tuning.	Default: <9> Min: 0.000 Ω Max: 65.000 Ω	199
E2-06 (313H)	Motor Leakage Inductance	V/f V/f w/PG OLV CLV OLV/PM AOLV/PM CLV/PM Sets the voltage drop due to motor leakage inductance as a percentage of motor rated voltage. Automatically set during Auto-Tuning.	Default: <9> Min: 0.0% Max: 40.0%	199
E2-07 (314H)	Motor Iron-Core Saturation Coefficient 1	V/f V/f w/PG OLV CLV OLV/PM AOLV/PM CLV/PM Sets the motor iron saturation coefficient at 50% of magnetic flux. Automatically set during Auto-Tuning.	Default: 0.50 Min: E2-07 Max: 0.50	199
E2-08 (315H)	Motor Iron-Core Saturation Coefficient 2	V/f V/f w/PG OLV CLV OLV/PM AOLV/PM CLV/PM Sets the motor iron saturation coefficient at 75% of magnetic flux. Automatically set during Auto-Tuning.	Default: 0.75 Min: E2-07 Max: 0.75	199
E2-09 (316H)	Motor Mechanical Loss	V/f V/f w/PG OLV CLV OLV/PM AOLV/PM CLV/PM Sets the motor mechanical loss as a percentage of motor rated power (kW).	Default: 0.0% Min: 0.0% Max: 10.0%	200
E2-10 (317H)	Motor Iron Loss for Torque Compensation	V/f V/f w/PG OLV CLV OLV/PM AOLV/PM CLV/PM Sets the motor iron loss.	Default: <9> Min: 0 W Max: 65535 W	200
E2-11 (318H)	Motor Rated Power	V/f V/f w/PG OLV CLV OLV/PM AOLV/PM CLV/PM Sets the motor rated power in kilowatts (1 HP = 0.746 kW). Automatically set during Auto-Tuning.	Default: <9> Min: 0.00 kW Max: 650.00 kW	200

上誼科技有限公司
購買、維修 此手冊零組件
電話： 037-466333
Email: service@repairtw.com
Line id: @zzzz
www.repairtw.com

<9> Default setting value is dependent on the drive model (o2-04) and the Drive Duty (C6-01).
<19> This value's number of decimal places depends on the drive model and the Heavy/Normal duty selection in parameter C6-01. The value will have two decimal places (0.01 A) if the drive is set for a Maximum Applicable Motor Capacity up to 11 kW (refer to *Table A.2* and *Table A.3*) and one decimal place (0.1 A) if the set Maximum Applicable Motor Capacity is higher than 11 kW.

■ E3: V/f Pattern for Motor 2

These parameters are hidden when a PM motor control mode has been selected for motor 1 (A1-02 = 5, 6, 7).

No.(Addr.)	Name	Description	Setting	Page
E3-01 (319H)	Motor 2 Control Mode Selection	V/f V/f w/PG OLV CLV OLV/PM AOLV/PM CLV/PM 0: V/f Control 1: V/f Control with PG 2: Open Loop Vector Control 3: Closed Loop Vector Control	Default: 0 Min: 0 Max: 3	201
E3-04 (31AH)	Motor 2 Maximum Output Frequency	V/f V/f w/PG OLV CLV OLV/PM AOLV/PM CLV/PM These parameters are only applicable when E1-03 is set to F. To set linear V/f characteristics, set the same values for E3-07 and E3-09. In this case, the setting for E3-08 will be disregarded. Ensure that the four frequencies are set according to these rules or an oPE10 fault will occur: E3-09 ≤ E3-07 < E3-06 ≤ E3−11 ≤ E3-04 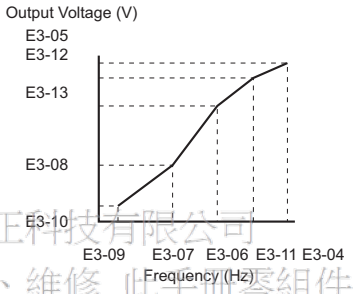 **Note:** E3-07 and E3-08 are only available in the following control modes: V/f, V/f w/PG and OLV.	Default: <25> Min: 40.0 Max: 400.0	201
E3-05 (31BH)	Motor 2 Maximum Voltage		Default: <18> Min: 0.0 V Max: 255.0 V <18>	201
E3-06 (31CH)	Motor 2 Base Frequency		Default: <25> Min: 0.0 Max: E3-04	201
E3-07 (31DH)	Motor 2 Mid Output Frequency		Default: <25> Min: 0.0 Max: E3-04	201
E3-08 (31EH)	Motor 2 Mid Output Frequency Voltage		Default: <18> <25> Min: 0.0 V Max: 255.0 V <18>	201
E3-09 (31FH)	Motor 2 Minimum Output Frequency		Default: <25> Min: 0.0 Max: E3-04	201
E3-10 (320H)	Motor 2 Minimum Output Frequency Voltage		Default: <18> <25> Min: 0.0 V Max: 255.0 V <18>	201
E3-11 (345H)	Motor 2 Mid Output Frequency 2		Default: 0.0 <24> Min: 0.0 Max: E3-04 <26>	201
E3-12 (346H) <24>	Motor 2 Mid Output Frequency Voltage 2		Default: 0.0 V <18> Min: 0.0 V Max: 255.0 V <18>	201
E3-13 (347H)	Motor 2 Base Voltage		Default: 0.0 V <18> <27> Min: 0.0 V Max: 255.0 V <18>	201

上正科技有限公司
購買、維修 此手冊零組件
電話： 037-466333
Email: service@repairtw.com
www.repairtw.com

<18> Values shown here are for 200 V class drives. Double the value when using a 400 V class drive.
<24> Parameter ignored when E3-11 (Motor 2 Mid Output Frequency 2) and E3-12 (Motor 2 Mid Output Frequency Voltage 2) are set to 0.
<25> Default setting depends on the control mode for motor 2 set in parameter E3-01. The value shown here is for V/f Control.
<26> The setting range is 0.0 to 66.0 in AOLV/PM.
<27> When Auto-Tuning is performed, E1-13 and E1-05 will be set to the same value.

■ E4: Motor 2 Parameters

These parameters are hidden when a PM motor control mode has been selected for motor 1 (A1-02 = 5, 6, 7).

No.(Addr.)	Name	Description	Setting	Page
E4-01 (321H)	Motor 2 Rated Current	V/f V/f w/PG OLV CLV OLV/PM AOLV/PM CLV/PM Sets the full load current for motor 2. Automatically set during Auto-Tuning.	Default: <9> Min: 10% of drive rated current Max: 200% of drive rated current <19>	202
E4-02 (322H)	Motor 2 Rated Slip	V/f V/f w/PG OLV CLV OLV/PM AOLV/PM CLV/PM Sets the rated slip for motor 2. Automatically set during Auto-Tuning.	Default: <9> Min: 0.00 Hz Max: 20.00 Hz <19>	202
E4-03 (323H)	Motor 2 Rated No-Load Current	V/f V/f w/PG OLV CLV OLV/PM AOLV/PM CLV/PM Sets the no-load current for motor 2. Automatically set during Auto-Tuning.	Default: <9> Min: 0 A Max: E4-01 <19>	202
E4-04 (324H)	Motor 2 Motor Poles	V/f V/f w/PG OLV CLV OLV/PM AOLV/PM CLV/PM Sets the number of poles of motor 2. Automatically set during Auto-Tuning.	Default: 4 Min: 2 Max: 48	203
E4-05 (325H)	Motor 2 Line-to-Line Resistance	V/f V/f w/PG OLV CLV OLV/PM AOLV/PM CLV/PM Sets the phase-to-phase resistance for motor 2. Automatically set during Auto-Tuning.	Default: <9> Min: 0.000 Ω Max: 65.000 Ω	203

No.(Addr.)	Name	Description	Setting	Page
E4-06 (326H)	Motor 2 Leakage Inductance	V/f V/f w/PG OLV CLV OLV/PM AOLV/PM CLV/PM Sets the voltage drop for motor 2 due to motor leakage inductance as a percentage of rated voltage. Automatically set during Auto-Tuning.	Default: <9> Min: 0.0% Max: 40.0%	203
E4-07 (343H)	Motor 2 Motor Iron-Core Saturation Coefficient 1	V/f V/f w/PG OLV CLV OLV/PM AOLV/PM CLV/PM Set to the motor iron saturation coefficient at 50% of magnetic flux for motor 2. Automatically set during Auto-Tuning.	Default: 0.50 Min: 0.00 Max: 0.50	203
E4-08 (344H)	Motor 2 Motor Iron-Core Saturation Coefficient 2	V/f V/f w/PG OLV CLV OLV/PM AOLV/PM CLV/PM Set to the motor iron saturation coefficient at 75% of magnetic flux for motor 2. This value is automatically set during Auto-Tuning.	Default: 0.75 Min: E4-07 Max: 0.75	203
E4-09 (33FH)	Motor 2 Mechanical Loss	V/f V/f w/PG OLV CLV OLV/PM AOLV/PM CLV/PM Sets the motor mechanical loss for motor 2 as a percentage of motor rated power (kW).	Default: 0.0% Min: 0.0% Max: 10.0%	203
E4-10 (340H)	Motor 2 Iron Loss	V/f V/f w/PG OLV CLV OLV/PM AOLV/PM CLV/PM Sets the motor iron loss.	Default: <9> Min: 0 W Max: 65535 W	203
E4-11 (327H)	Motor 2 Rated Power	V/f V/f w/PG OLV CLV OLV/PM AOLV/PM CLV/PM Sets the motor rated capacity in kW. Automatically set during Auto-Tuning.	Default: <9> Min: 0.00 kW Max: 650.00 kW	204

<9> Default setting value is dependent on the drive model (o2-04) and the Drive Duty (C6-01).
<19> This value's number of decimal places depends on the drive model and the Heavy/Normal duty selection in parameter C6-01. The value will have two decimal places (0.01 A) if the drive is set for a Maximum Applicable Motor Capacity up to 11 kW (refer to *Table A.2* and *Table A.3*) and one decimal place (0.1 A) if the set Maximum Applicable Motor Capacity is higher than 11 kW.

■ E5: PM Motor Settings

上正科技有限公司
購買、維修 此手冊零組件
電話：037-466333
Email: service@repairtw.com
www.repairtw.com

No.(Addr.)	Name	Description	Setting	Page
E5-01 (329H) <3>	Motor Code Selection	V/f V/f w/PG OLV CLV OLV/PM AOLV/PM CLV/PM Enter the Yaskawa motor code for the PM motor being used. Various motor parameters are automatically set based on the value of this parameter. Setting that were changed manually will be overwritten by the defaults of the selected motor code. **Note:** Set to FFFF when using a non-Yaskawa PM motor.	Default: <4> <23> Min: 0000 Max: FFFF <28>	204
E5-02 (32AH) <3>	Motor Rated Power	V/f V/f w/PG OLV CLV OLV/PM AOLV/PM CLV/PM Sets the rated capacity of the motor.	Default: <14> Min: 0.10 kW Max: 650.00 kW	204
E5-03 (32BH) <3>	Motor Rated Current	V/f V/f w/PG OLV CLV OLV/PM AOLV/PM CLV/PM Sets the motor rated current.	Default: <14> Min: 10% of drive rated current Max: 200% of drive rated current <19>	204
E5-04 (32CH) <3>	Number of Motor Poles	V/f V/f w/PG OLV CLV OLV/PM AOLV/PM CLV/PM Sets the number of motor poles.	Default: <14> Min: 2 Max: 48	204
E5-05 (32DH) <3>	Motor Stator Resistance	V/f V/f w/PG OLV CLV OLV/PM AOLV/PM CLV/PM Set the resistance for each motor phase.	Default: <14> Min: 0.000 Ω Max: 65.000 Ω	205
E5-06 (32EH) <3>	Motor d-Axis Inductance	V/f V/f w/PG OLV CLV OLV/PM AOLV/PM CLV/PM Sets the d-axis inductance for the PM motor.	Default: <14> Min: 0.00 mH Max: 300.00 mH	205
E5-07 (32FH) <3>	Motor q-Axis Inductance	V/f V/f w/PG OLV CLV OLV/PM AOLV/PM CLV/PM Sets the q-axis inductance for the PM motor.	Default: <14> Min: 0.00 mH Max: 600.00 mH	205
E5-09 (331H) <3>	Motor Induction Voltage Constant 1	V/f V/f w/PG OLV CLV OLV/PM AOLV/PM CLV/PM Set the induced phase peak voltage in units of 0.1 mV (rad/s) [electrical angle]. Set this parameter when using a Yaskawa SSR1 Series PM motor with derated torque, or a Yaskawa SST4 Series motor with constant torque. When setting this parameter, E5-24 should be set to 0.	Default: <14> Min: 0.0 mV/(rad/s) Max: 2000.0 mV/(rad/s)	205

No.(Addr.)	Name	Description	Setting	Page
E5-11 (333H)	Encoder Z-pulse Offset	V/f V/f w/PG OLV CLV OLV/PM AOLV/PM **CLV/PM** Sets the offset between the rotor magnetic axis and the Z pulse of an incremental encoder. Set during Z Pulse Offset Tuning.	Default: 0.0 deg Min: -180 deg Max: 180 deg	*205*
E5-24 (353H) *<3>*	Motor Induction Voltage Constant 2	V/f V/f w/PG OLV CLV **OLV/PM** **AOLV/PM** **CLV/PM** Set the induced phase-to-phase rms voltage in units of 0.1 mV/(r/min) [mechanical angle]. Set this parameter when using a Yaskawa SMRA Series SPM motor. When setting this parameter, E5-09 should be set to 0.	Default: *<14>* Min: 0.0 mV/(r/min) Max: 2000.0 mV/(r/min)	*205*

<3> Parameter setting value is not reset to the default value when the drive is initialized.
<4> Default setting is dependent on the control mode (A1-02), the drive model (o2-04), and the Drive Duty (C6-01).
<14> Default setting value is dependent on the motor code set to E5-01.
<19> This value's number of decimal places depends on the drive model and the Heavy/Normal duty selection in parameter C6-01. The value will have two decimal places (0.01 A) if the drive is set for a Maximum Applicable Motor Capacity up to 11 kW (refer to ***Table A.2*** and ***Table A.3***) and one decimal place (0.1 A) if the set Maximum Applicable Motor Capacity is higher than 11 kW.
<23> If using a Yaskawa SMRA Series SPM Motor, the default setting is 1800 r/min.
<28> Selection may vary depending on the motor code entered to E5-01.

◆ F: Options

F parameters are used to program the drive for PG feedback from the motor and to function with option cards.

■ F1: PG Speed Control Card (PG-B3 / PG-X3)

Parameters F1-01, F1-05, F1-06, F1-12, F1-13, and F1-18 through F1-21 are used to set up a PG option card plugged into option connector CN5-C of the drive. They include “PG 1” in the parameter name.

Parameters F1-21 through F1-37 are used to set up a PG option card plugged into option connector CN5-B of the drive. They include “PG 2” in the parameter name.

Other parameters in the F1 group are used to set operation for PG options plugged into connector CN5-C and CN5-B.

上正科技有限公司
購買 維修 此零部件
電話： 037-466233
Email: service@repairtw.com
www.repairtw.com

No.(Addr.)	Name	Description	Setting	Page
F1-01 (380H)	PG 1 Pulses Per Revolution	V/f **V/f w/PG** OLV CLV OLV/PM AOLV/PM **CLV/PM** Sets the number of PG (pulse generator or encoder) pulses. Sets the number of pulses per motor revolution.	Default: *<10>* Min: 0 ppr Max: 60000 ppr	*206*
F1-02 (381H)	Operation Selection at PG Open Circuit (PGo)	V/f **V/f w/PG** OLV CLV OLV/PM AOLV/PM **CLV/PM** 0: Ramp to stop. Decelerate to stop using the deceleration time in C1-02. 1: Coast to stop. 2: Fast Stop. Decelerate to stop using the deceleration time in C1-09. 3: Alarm only. 4: No alarm display. **Note:** Due to potential damage to motor and machinery, the "Alarm only" and "No alarm display" setting should be used only under special circumstances.	Default: 1 Min: 0 Max: 4	*206*
F1-03 (382H)	Operation Selection at Overspeed (oS)	V/f **V/f w/PG** OLV CLV OLV/PM AOLV/PM **CLV/PM** 0: Ramp to stop. Decelerate to stop using the deceleration time in C1-02. 1: Coast to stop. 2: Fast Stop. Decelerate to stop using the deceleration time in C1-09. 3: Alarm only.	Default: 1 Min: 0 Max: 3	*206*
F1-04 (383H)	Operation Selection at Deviation	V/f **V/f w/PG** OLV CLV OLV/PM **AOLV/PM** **CLV/PM** 0: Ramp to stop. Decelerate to stop using the deceleration time in C1-02. 1: Coast to stop. 2: Fast Stop. Decelerate to stop using the deceleration time in C1-09. 3: Alarm only.	Default: 3 Min: 0 Max: 3	*207*
F1-05 (384H)	PG 1 Rotation Selection	V/f **V/f w/PG** OLV CLV OLV/PM AOLV/PM **CLV/PM** 0: Pulse A leads 1: Pulse B leads	Default: *<10>* Min: 0 Max: 1	*207*
F1-06 (385H)	PG 1 Division Rate for PG Pulse Monitor	V/f **V/f w/PG** OLV CLV OLV/PM AOLV/PM **CLV/PM** Sets the division ratio for the pulse monitor used of the PG option card installed to connector CN5-C. By setting “xyz”, the division ratio becomes = [(1 + x) / yz]. If only using the A pulse for one track input, then the input ratio will be 1:1, regardless of what F1-06 is set to.	Default: 1 Min: 1 Max: 132	*207*

No.(Addr.)	Name	Description	Setting	Page
F1-08 (387H)	Overspeed Detection Level	V/f, V/f w/PG, OLV, CLV, OLV/PM, AOLV/PM, CLV/PM Sets the overspeed detection level as a percentage of the maximum output frequency.	Default: 115% Min: 0% Max: 120%	206
F1-09 (388H)	Overspeed Detection Delay Time	V/f, V/f w/PG, OLV, CLV, OLV/PM, AOLV/PM, CLV/PM Sets the time in seconds for an overspeed situation to trigger a fault (oS).	Default: <10> Min: 0.0 s Max: 2.0 s	206
F1-10 (389H)	Excessive Speed Deviation Detection Level	V/f, V/f w/PG, OLV, CLV, OLV/PM, AOLV/PM, CLV/PM Sets the speed deviation detection level as a percentage of the maximum output frequency.	Default: 10% Min: 0% Max: 50%	207
F1-11 (38AH)	Excessive Speed Deviation Detection Delay Time	V/f, V/f w/PG, OLV, CLV, OLV/PM, AOLV/PM, CLV/PM Sets the time in seconds for a speed deviation situation to trigger a fault (dEv).	Default: 0.5 s Min: 0.0 s Max: 10.0 s	207
F1-12 (38BH)	PG 1 Gear Teeth 1	V/f, V/f w/PG, OLV, CLV, OLV/PM, AOLV/PM, CLV/PM Sets the gear ratio between the motor shaft and the encoder (PG). A gear ratio of 1 will be used if either of these parameters is set to 0.	Default: 0 Min: 0 Max: 1000	207
F1-13 (38CH)	PG 1 Gear Teeth 2		Default: 0 Min: 0 Max: 1000	207
F1-14 (38DH)	PG Open-Circuit Detection Time	V/f, V/f w/PG, OLV, CLV, OLV/PM, AOLV/PM, CLV/PM Sets the time required to trigger a PG Open fault (PGo).	Default: 2.0 s Min: 0.0 s Max: 10.0 s	206
F1-18 (3ADH)	dv3 Detection Selection	V/f, V/f w/PG, OLV, CLV, OLV/PM, AOLV/PM, CLV/PM 0: Disabled 1: Enabled	Default: 10 Min: 0 Max: 10	208
F1-19 (3AEH)	dv4 Detection Selection	V/f, V/f w/PG, OLV, CLV, OLV/PM, AOLV/PM, CLV/PM 0: Disabled n: Number of pulses that the A and B pulse are reversed that triggers dv4 detection.	Default: 128 Min: 0 Max: 5000	208
F1-20 (3B4H)	PG Option Card Disconnect Detection 1	V/f, V/f w/PG, OLV, CLV, OLV/PM, AOLV/PM, CLV/PM 0: Disabled 1: Enabled	Default: 1 Min: 0 Max: 1	208
F1-21 (3BCH)	PG 1 Signal Selection	V/f, V/f w/PG, OLV, CLV, OLV/PM, AOLV/PM, CLV/PM 0: A pulse detection 1: AB pulse detection	Default: 0 Min: 0 Max: 1	208
F1-30 (3AAH)	PG Card Option Port for Motor 2 Selection	V/f, V/f w/PG, OLV, CLV, OLV/PM, AOLV/PM, CLV/PM Sets the port for the PG option card used by motor 2. 0: CN5-C 1: CN5-B	Default: 1 Min: 0 Max: 1	208
F1-31 (3B0H)	PG 2 Pulses Per Revolution	V/f, V/f w/PG, OLV, CLV, OLV/PM, AOLV/PM, CLV/PM Sets the number of pulses for a PG option card connected to port CN5-B.	Default: 1024 ppr Min: 0 ppr Max: 60000 ppr	206
F1-32 (3B1H)	PG 2 Rotation Selection	V/f, V/f w/PG, OLV, CLV, OLV/PM, AOLV/PM, CLV/PM 0: Pulse A leads 1: Pulse B leads	Default: 0 Min: 0 Max: 1	207
F1-33 (3B2H)	PG 2 Gear Teeth 1	V/f, V/f w/PG, OLV, CLV, OLV/PM, AOLV/PM, CLV/PM Sets the gear ratio between the motor shaft and the encoder (PG). A gear ratio of 1 will be used if either of these parameters is set to 0.	Default: 0 Min: 0 Max: 1000	207
F1-34 (3B3H)	PG 2 Gear Teeth 2		Default: 0 Min: 0 Max: 1000	207
F1-35 (3BEH)	PG 2 Division Rate for Pulse Monitor	V/f, V/f w/PG, OLV, CLV, OLV/PM, AOLV/PM, CLV/PM Sets the division ratio for the pulse monitor used of the PG option card 2 installed to connector CN5-B. By setting “xyz”, the division ratio becomes = [(1 + x) / yz].	Default: 1 Min: 1 Max: 132	207

上下科技有限公司
購買、維修 此手冊零組件
電話： 037-466333
Email: service@repairtw.com
Line id: @zzz
www.repairtw.com

No.(Addr.)	Name	Description	Setting	Page
F1-36 (3B5H)	PG Option Card Disconnect Detection 2	V/f V/f w/PG OLV CLV OLV/PM AOLV/PM CLV/PM 0: Disabled 1: Enabled	Default: 1 Min: 0 Max: 1	*208*
F1-37 (3BDH)	PG 2 Signal Selection	V/f V/f w/PG OLV CLV OLV/PM AOLV/PM CLV/PM 0: A pulse detection 1: AB pulse detection	Default: 0 Min: 0 Max: 1	*208*

<10> Default setting is determined by the control mode (A1-02).

■ F2: Analog Input Card (AI-A3)

No.(Addr.)	Name	Description	Setting	Page
F2-01 (38FH)	Analog Input Option Card Operation Selection	All Modes 0: Option card input terminals V1, V2, and V3 replace drive input terminals A1, A2, and A3. 1: Input signals to terminals V1, V2, and V3 are added together to create the frequency reference.	Default: 0 Min: 0 Max: 1	*209*
F2-02 (368H) RUN	Analog Input Option Card Gain	All Modes Sets the gain for the input signal to the analog card.	Default: 100.0% Min: -999.9% Max: 999.9%	*209*
F2-03 (369H) RUN	Analog Input Option Card Bias	All Modes Sets the bias for the input signal to the analog card.	Default: 0.0% Min: -999.9% Max: 999.9%	*209*

■ F3: Digital Input Card (DI-A3)

No.(Addr.)	Name	Description	Setting	Page
F3-01 (390H)	Digital Input Option Card Input Selection	All Modes 0: BCD, 1% units 1: BCD, 0.1% units 2: BCD, 0.01% units 3: BCD, 1 Hz units 4: BCD, 0.1 Hz units 5: BCD, 0.01 Hz units 6: BCD customized setting (5 digit), 0.02 Hz units 7: Binary input When the digital operator units are set to be displayed in Hertz or user-set units (o1-03 = 2 or 3), the units for F3-01 are determined by parameter o1-03.	Default: 0 Min: 0 Max: 7	*209*
F3-03 (3B9H)	Digital Input Option DI-A3 Data Length Selection	All Modes 0: 8 bit 1: 12 bit 2: 16 bit	Default: 2 Min: 0 Max: 2	*210*

上正科技有限公司
購買、維修 此手冊零組件
電話： 037-466333
Email: service@repairtw.com
All right ©2022
www.repairtw.com

■ F4: Analog Monitor Card (AO-A3)

No.(Addr.)	Name	Description	Setting	Page
F4-01 (391H)	Terminal V1 Monitor Selection	All Modes Sets the monitor signal for output from terminal V1. Set this parameter to the last three digits of the desired U□-□□ monitor. Some U parameters are available only in certain control modes.	Default: 102 Min: 000 Max: 999	*210*
F4-02 (392H) RUN	Terminal V1 Monitor Gain	All Modes Sets the gain for voltage output via terminal V1.	Default: 100.0% Min: -999.9% Max: 999.9%	*210*
F4-03 (393H)	Terminal V2 Monitor Selection	All Modes Sets the monitor signal for output from terminal V2. Set this parameter to the last three digits of the desired U□-□□ monitor. Some U parameters are available only in certain control modes.	Default: 103 Min: 000 Max: 999	*210*
F4-04 (394H) RUN	Terminal V2 Monitor Gain	All Modes Sets the gain for voltage output via terminal V2.	Default: 50.0% Min: -999.9% Max: 999.9%	*210*
F4-05 (395H) RUN	Terminal V1 Monitor Bias	All Modes Sets the amount of bias added to the voltage output via terminal V1.	Default: 0.0% Min: -999.9% Max: 999.9%	*210*
F4-06 (396H) RUN	Terminal V2 Monitor Bias	All Modes Sets the amount of bias added to the voltage output via terminal V2.	Default: 0.0% Min: -999.9% Max: 999.9%	*210*

No.(Addr.)	Name	Description	Setting	Page
F4-07 (397H)	Terminal V1 Signal Level	All Modes 0: 0 to 10 V 1: -10 to 10 V	Default: 0 Min: 0 Max: 1	210
F4-08 (398H)	Terminal V2 Signal Level		Default: 0 Min: 0 Max: 1	210

■ F5: Digital Output Card (DO-A3)

No.(Addr.)	Name	Description	Setting	Page
F5-01 (399H)	Terminal P1-PC Output Selection	All Modes Sets the function for contact output terminals M1-M2, M3-M4, and photocoupler output terminals P1 through P6.	Default: 2 Min: 0 Max: 192	211
F5-02 (39AH)	Terminal P2-PC Output Selection		Default: 4 Min: 0 Max: 192	211
F5-03 (39BH)	Terminal P3-PC Output Selection		Default: 6 Min: 0 Max: 192	211
F5-04 (39CH)	Terminal P4-PC Output Selection		Default: 37 Min: 0 Max: 192	211
F5-05 (39DH)	Terminal P5-PC Output Selection		Default: F Min: 0 Max: 192	211
F5-06 (39EH)	Terminal P6-PC Output Selection		Default: F Min: 0 Max: 192	211
F5-07 (39FH)	Terminal M1-M2 Output Selection		Default: 0 Min: 0 Max: 192	211
F5-08 (3A0H)	Terminal M3-M4 Output Selection		Default: 1 Min: 0 Max: 192	211
F5-09 (3A1H)	DO-A3 Output Mode Selection	All Modes 0: Output terminals are each assigned separate output functions. 1: Binary code output 2: Use output terminal functions selected by parameters F5-01 through F5-08.	Default: 0 Min: 0 Max: 2	211

上正科技有限公司
購買、維修 此手冊零組件
電話: 037-196333
Email: service@repairtw.com
Line id: @zzzz
www.repairtw.com

■ F6: Communication Option Card

F6-01 through F6-03 and F6-06 through F6-08 are common settings used for CC-Link, CANopen, DeviceNet, PROFIBUS-DP, and MECHATROLINK-II option cards. Other parameters in the F6 group are used for communication protocol specific settings.

For more details on a specific option card, refer to the instruction manual for the option card.

No.(Addr.)	Name	Description	Setting	Page
F6-01 (3A2H)	Communications Error Operation Selection	All Modes 0: Ramp to stop. Decelerate to stop using the deceleration time in C1-02. 1: Coast to stop. 2: Fast Stop. Decelerate to stop using the deceleration time in C1-09. 3: Alarm only.	Default: 1 Min: 0 Max: 3	211
F6-02 (3A3H)	External Fault from Comm. Option Detection Selection	All Modes 0: Always detected 1: Detection during run only	Default: 0 Min: 0 Max: 1	212
F6-03 (3A4H)	External Fault from Comm. Option Operation Selection	All Modes 0: Ramp to stop. Decelerate to stop using the deceleration time in C1-02. 1: Coast to stop. 2: Fast Stop. Decelerate to stop using the deceleration time in C1-09. 3: Alarm only.	Default: 1 Min: 0 Max: 3	212
F6-04 (3A5H)	bUS Error Detection Time	All Modes Set the delay time for error detection if a bus error occurs.	Default: 2.0 s Min: 0.0 s Max: 5.0 s	–
F6-06 (3A7H)	Torque Reference/Torque Limit Selection from Comm. Option	V/f V/f w/PG OLV CLV OLV/PM AOLV/PM CLV/PM 0: Disabled.Torque reference/limit from option board disabled. 1: Enabled. Torque reference/limit from option board enabled.	Default: 0 Min: 0 Max: 1	212
F6-07 (3A8H)	Multi-Step Speed Enable/Disable Selection when NefRef/ComRef is Selected	All Modes 0: Multi-step reference disabled (same as F7) 1: Multi-step reference enabled (same as V7)	Default: 0 Min: 0 Max: 1	212

No.(Addr.)	Name	Description	Setting	Page
F6-08 (36AH) <3>	Reset Communication Parameters	All Modes 0: Communication-related parameters (F6-□□) are not reset when the drive is initialized using A1-03. 1: Reset all communication-related parameters (F6-□□) when the drive is initialized using A1-03.	Default: 0 Min: 0 Max: 1	212
F6-10 (3B6H)	CC-Link Node Address	All Modes Sets the node address if a CC-Link option card is installed.	Default: 0 Min: 0 Max: 64	–
F6-11 (3B7H)	CC-Link Communication Speed	All Modes 0: 156 Kbps 1: 625 Kbps 2: 2.5 Mbps 3: 5 Mbps 4: 10 Mbps	Default: 0 Min: 0 Max: 4	–
F6-14 (3BBH)	CC-Link bUS Error Auto Reset	All Modes 0: Disabled 1: Enabled	Default: 0 Min: 0 Max: 1	–
F6-20 (36BH)	MECHATROLINK Station Address	All Modes Sets the station address when the MECHATROLINK-II option has been installed.	Default: 21 Min: 20 Max: 3FH	–
F6-21 (36CH)	MECHATROLINK Frame Size	All Modes 0: 32 byte 1: 17 byte	Default: 0 Min: 0 Max: 1	–
F6-22 (36DH)	MECHATROLINK Link Speed	All Modes 0: 10 Mbps 1: 4 Mbps	Default: 0 Min: 0 Max: 1	–
F6-23 (36EH)	MECHATROLINK Monitor Selection (E)	All Modes Sets the MECHATROLINK-II monitor (E).	Default: 0 Min: 0 Max: FFFFH	–
F6-24 (36FH)	MECHATROLINK Monitor Selection (F)	All Modes Sets the MECHATROLINK-II monitor (F).	Default: 0 Min: 0 Max: FFFFH	–
F6-25 (3C9H)	Operation Selection at Watchdog Timer Error (E5)	All Modes 0: Ramp to stop. Decelerate to stop using the deceleration time in C1-02. 1: Coast to stop. 2: Fast Stop. Decelerate to stop using the deceleration time in C1-09. 3: Alarm only.	Default: 1 Min: 0 Max: 3	–
F6-26 (3CAH)	MECHATROLINK bUS Errors Detected	All Modes Sets the number of option communication errors (bUS).	Default: 2 Min: 2 Max: 10	–
F6-30 (3CBH)	PROFIBUS-DP Node Address	All Modes Sets the node address.	Default: 0 Min: 0 Max: 125	–
F6-31 (3CCH)	PROFIBUS-DP Clear Mode Selection	All Modes 0: Resets drive operation with a Clear mode command. 1: Maintains the previous operation state when Clear mode command is given.	Default: 0 Min: 0 Max: 1	–
F6-32 (3CDH)	PROFIBUS-DP Data Format Selection	All Modes 0: PPO Type 1: Conventional	Default: 0 Min: 0 Max: 1	–
F6-35 (3D0H)	CANopen Node ID Selection	All Modes Sets the node address.	Default: 0 Min: 0 Max: 126	–
F6-36 (3D1H)	CANopen Communication Speed	All Modes 0: Auto-detection 1: 10 kbps 2: 20 kbps 3: 50 kbps 4: 125 kbps 5: 250 kbps 6: 500 kbps 7: 800 kbps 8: 1 Mbps	Default: 6 Min: 0 Max: 8	–
F6-50 (3C1H)	DeviceNet MAC Address	All Modes Selects the drives MAC address.	Default: 0 Min: 0 Max: 64	–
F6-51 (3C2H)	DeviceNet Communication Speed	All Modes 0: 125 kbps 1: 250 kbps 2: 500 kbps 3: Adjustable from network 4: Detect automatically	Default: 0 Min: 0 Max: 4	–
F6-52 (3C3H)	DeviceNet PCA Setting	All Modes Sets the format of the data set from the DeviceNet master to the drive.	Default: 21 Min: 0 Max: 255	–

上正科技有限公司
購買、維修 此手冊零組件
電話： 037-466333
Email: service@repairtw.com
Line id: @222
www.repairtw.com

No.(Addr.)	Name	Description	Setting	Page
F6-53 (3C4H)	DeviceNet PPA Setting	All Modes Sets the format of the data set from the drive to the DeviceNet master.	Default: 71 Min: 0 Max: 255	–
F6-54 (3C5H)	DeviceNet Idle Mode Fault Detection	All Modes 0: Enabled 1: Disabled, no fault detection	Default: 0 Min: 0 Max: 1	–
F6-55 (3C6H)	DeviceNet Baud Rate Monitor	All Modes Used to verify the baud rate running on the network. 0: 125 kbps 1: 250 kbps 2: 500 kbps	Default: 0 Min: 0 Max: 2	–
F6-56 (3D7H)	DeviceNet Speed Scaling	All Modes Sets the scaling factor for the speed monitor in DeviceNet.	Default: 0 Min: -15 Max: 15	–
F6-57 (3D8H)	DeviceNet Current Scaling	All Modes Sets the scaling factor for the output current monitor in DeviceNet.	Default: 0 Min: -15 Max: 15	–
F6-58 (3D9H)	DeviceNet Torque Scaling	All Modes Sets the scaling factor for the torque monitor in DeviceNet.	Default: 0 Min: -15 Max: 15	–
F6-59 (3DAH)	DeviceNet Power Scaling	All Modes Sets the scaling factor for the power monitor in DeviceNet.	Default: 0 Min: -15 Max: 15	–
F6-60 (3DBH)	DeviceNet Voltage Scaling	All Modes Sets the scaling factor for the voltage monitor in DeviceNet.	Default: 0 Min: -15 Max: 15	–
F6-61 (3DCH)	DeviceNet Time Scaling	All Modes Sets the scaling factor for the time monitor in DeviceNet.	Default: 0 Min: -15 Max: 15	–
F6-62 (3DDH)	DeviceNet Heartbeat Interval	All Modes Sets the heartbeat interval for DeviceNet communications.	Default: 0 Min: 0 Max: 10	–
F6-63 (3DEH)	DeviceNet Network MAC ID	All Modes Used to verify the MAC ID the drive has been assigned.	Default: 0 Min: 0 Max: 63	–
F6-64 to F6-71 (3DFH to 3C8H)	Reserved	All Modes Reserved for Dynamic I/O Assembly Parameters.	–	–

<3> Parameter setting value is not reset to the default value when the drive is initialized.

上正科技有限公司
購買、維修 此手冊零組件
電話： 037466333
Email: service@repairtw.com
Line ID: @zzzz
www.repairtw.com

◆ H Parameters: Multi-Function Terminals

H parameters assign functions to the multi-function input and output terminals.

■ H1: Multi-Function Digital Inputs

No.(Addr.)	Name	Description	Setting	Page
H1-01 (438H)	Multi-Function Digital Input Terminal S1 Function Selection	All Modes Assigns a function to the multi-function digital inputs. Refer to *H1 Multi-Function Digital Input Selections on page 424* for a description of setting values. **Note:** Unused terminals should be set to F.	Default: 40 (F) <31> Min: 1 Max: 9F	*214*
H1-02 (439H)	Multi-Function Digital Input Terminal S2 Function Selection		Default: 41 (F) <31> Min: 1 Max: 9F	*214*
H1-03 (400H)	Multi-Function Digital Input Terminal S3 Function Selection		Default: 24 Min: 0 Max: 9F	*214*
H1-04 (401H)	Multi-Function Digital Input Terminal S4 Function Selection		Default: 14 Min: 0 Max: 9F	*214*
H1-05 (402H)	Multi-Function Digital Input Terminal S5 Function Selection		Default: 3(0) <31> Min: 0 Max: 9F	*214*
H1-06 (403H)	Multi-Function Digital Input Terminal S6 Function Selection		Default: 4(3) <31> Min: 0 Max: 9F	*214*
H1-07 (404H)	Multi-Function Digital Input Terminal S7 Function Selection		Default: 6(4) <31> Min: 0 Max: 9F	*214*
H1-08 (405H)	Multi-Function Digital Input Terminal S8 Function Selection		Default: 8 Min: 0 Max: 9F	*214*

<31> Value in parenthesis is the default setting when a 3-wire initialization is performed (A1-03 = 3330).

H1 Multi-Function Digital Input Selections			
H1-□□ Setting	**Function**	**Description**	**Page**
0	3-wire Sequence	All Modes Closed: Reverse rotation (only if the drive is set up for 3-wire sequence) Terminals S1 and S2 are automatically set up for the Run command and Stop command.	215
1	LOCAL/REMOTE Selection	All Modes Open: REMOTE (parameter settings determine the source of the frequency Reference 1 or 2 (b1-01, b1-02 or b1-15, b1-16) Closed: LOCAL, digital operator is run and reference source	215
2	External Reference 1/2 Selection	All Modes Open: Run command and frequency reference source 1 (determined by b1-01 and b1-02) Closed: Run command and frequency reference source 2 (determined by b1-15 and b1-16)	216
3	Multi-Step Speed Reference 1	All Modes When input terminals are set to Multi-Step Speed References 1 through 3, switching combinations of those terminals will create a multi-step speed sequence using the frequency references set in d1-01 through d1-08.	216
4	Multi-Step Speed Reference 2		216
5	Multi-Step Speed Reference 3		216
6	Jog Reference Selection	All Modes Closed: Jog frequency reference (d1-17) selected. Jog has priority over all other reference sources.	216
7	Accel/Decel Time Selection 1	All Modes Used to switch between accel/decel time 1 (set in C1-01, C1-02) and accel/decel time 2 (set in C1-03, C1-04).	216
8	Baseblock Command (N.O.)	All Modes Closed: No drive output	216
9	Baseblock Command (N.C.)	All Modes Open: No drive output	216
A	Accel/Decel Ramp Hold	All Modes Open: Accel/decel is not held Closed: The drive pauses during acceleration or deceleration and maintains the output frequency.	216
B	Drive Overheat Alarm (oH2)	All Modes Closed: Closes when an oH2 alarm occurs	217
C	Analog Terminal Input Selection	All Modes Open: Function assigned by H3-14 is disabled. Closed: Function assigned by H3-14 is enabled.	217
D	PG Encoder Disable	V/f **V/f w/PG** OLV CLV OLV/PM AOLV/PM CLV/PM Open: Speed feedback for V/f Control with PG is enabled. Closed: Speed feedback disabled.	217
E	ASR Integral Reset	V/f **V/f w/PG** OLV **CLV** OLV/PM **AOLV/PM** **CLV/PM** Open: PI control Closed: Integral reset	217
F	Through Mode	All Modes Select this setting when using the terminal in a pass-through mode. The terminal does not trigger a drive function but can be used as digital input for the controller the drive is connected to.	217
10	Up Command	All Modes The drive accelerates when the Up command terminal closes, and decelerates when the Down command closes. When both terminals are closed or both are open, the drive holds the frequency reference. The Up and Down commands must always be used in conjunction with one another.	217
11	Down Command		217
12	Forward Jog	All Modes Closed: Runs forward at the Jog frequency d1-17.	218
13	Reverse Jog	All Modes Closed: Runs reverse at the Jog frequency d1-17.	218
14	Fault Reset	All Modes Closed: Resets faults if the cause is cleared and the Run command is removed.	218
15	Fast Stop (N.O.)	All Modes Closed: Decelerates at the Fast Stop time set to C1-09.	218

PLC科技有限公司
購買、維修 此手冊零組件
電話：037-466333
Email: service@repairtw.com
Line id: @zzz
www.repairtw.com

H1 Multi-Function Digital Input Selections			
H1-□□ Setting	**Function**	**Description**	**Page**
16	Motor 2 Selection	V/f V/f w/PG OLV CLV OLV/PM AOLV/PM CLV/PM Open: Motor 1 (E1-□□, E2-□□) Closed: Motor 2 (E3-□□, E4-□□)	*219*
17	Fast Stop (N.C.)	All Modes Open: Decelerates to stop at the Fast Stop time set to C1-09.	*218*
18	Timer Function Input	All Modes Triggers the timer set up by parameters b4-01 and b4-02. Must be set in conjunction with the timer function output (H2-□□ = 12).	*219*
19	PID Disable	All Modes Open: PID control enabled Closed: PID control disabled	*219*
1A	Accel/Decel Time Selection 2	All Modes Used in conjunction with an input terminal set for "Accel/decel time selection 1" (H1-□□ = 7), and allows the drive to switch between accel/decel times 3 and 4.	*220*
1B	Program Lockout	All Modes Open: Parameters cannot be edited (except for U1-01 if the reference source is assigned to the digital operator). Closed: Parameters can be edited and saved.	*220*
1E	Reference Sample Hold	All Modes Closed: Samples the analog frequency reference and operates the drive at that speed.	*220*
20 to 2F	External Fault	All Modes 20: N.O., Always detected, ramp to stop 21: N.C., Always detected, ramp to stop 22: N.O., During run, ramp to stop 23: N.C., During run, ramp to stop 24: N.O., Always detected, coast to stop 25: N.C., Always detected, coast to stop 26: N.O., During run, coast to stop 27: N.C., During run, coast to stop 28: N.O., Always detected, Fast Stop 29: N.C., Always detected, Fast Stop 2A: N.O., During run, Fast Stop 2B: N.C., During run, Fast Stop 2C: N.O., Always detected, alarm only (continue running) 2D: N.C., Always detected, alarm only (continue running) 2E: N.O., During run, alarm only (continue running) 2F: N.C., During run, alarm only (continue running)	*220*
30	PID Integral Reset	All Modes Closed: Resets the PID control integral value.	*221*
31	PID Integral Hold	All Modes Open: Performs integral operation. Closed: Maintains the current PID control integral value.	*221*
32	Multi-Step Speed Reference 4	All Modes Used in combination with input terminals set to Multi-Step Speed Reference 1, 2, and 3. Use parameters d1-09 to d1-16 to set reference values.	*221*
34	PID Soft Starter Cancel	All Modes Open: PID soft starter is enabled. Closed: Disables the PID soft starter b5-17.	*221*
35	PID Input Level Selection	All Modes Closed: Inverts the PID input signal	*221*
40	Forward Run Command (2-wire Sequence)	All Modes Open: Stop Closed: Forward run **Note:** Cannot be set together with settings 42 or 43.	*221*
41	Reverse Run Command (2-wire Sequence)	All Modes Open: Stop Closed: Reverse run **Note:** Cannot be set together with settings 42 or 43.	*221*
42	Run Command (2-wire Sequence 2)	All Modes Open: Stop Closed: Run **Note:** Cannot be set together with settings 40 or 41.	*221*

原廠維修公司
驅動維修 備手冊零組件
Email: service@repairtw.com
www.repairtw.com

H1 Multi-Function Digital Input Selections			
H1-□□ Setting	**Function**	**Description**	**Page**
43	FWD/REV Command (2-wire Sequence 2)	All Modes Open: Forward Closed: Reverse **Note:** Determines motor direction, but does not issue a Run command. Cannot be set together with settings 40 or 41.	*221*
44	Offset Frequency 1	All Modes Closed: Adds d7-01 to the frequency reference.	*221*
45	Offset Frequency 2	All Modes Closed: Adds d7-02 to the frequency reference.	*221*
46	Offset Frequency 3	All Modes Closed: Adds d7-03 to the frequency reference.	*221*
47	Node Setup	All Modes Closed: Node setup for SI-S3 enabled.	*222*
60	DC Injection Braking Command	V/f, V/f w/PG, OLV, CLV, OLV/PM, AOLV/PM, CLV/PM Closed: Triggers DC Injection Braking.	*222*
61	External Speed Search Command 1	V/f, V/f w/PG, OLV, CLV, OLV/PM, AOLV/PM, CLV/PM Closed: Activates Current Detection Speed Search from the maximum output frequency (E1-04).	*222*
62	External Speed Search Command 2	V/f, V/f w/PG, OLV, CLV, OLV/PM, AOLV/PM, CLV/PM Closed: Activates Current Detection Speed Search from the frequency reference.	*222*
63	Field Weakening	V/f, V/f w/PG, OLV, CLV, OLV/PM, AOLV/PM, CLV/PM Closed: The drive performs Field Weakening control as set for d6-01 and d6-02.	*222*
65	KEB Ride-Thru 1 (N.C.)	All Modes Open: KEB Ride-Thru 1 enabled	*222*
66	KEB Ride-Thru 1 (N.O.)	All Modes Closed: KEB Ride-Thru 1 enabled	*222*
67	Communications Test Mode	All Modes Tests the MEMOBUS/Modbus RS-485/422 interface. Displays “PASS” if the test completes successfully.	*222*
68	High Slip Braking	V/f, V/f w/PG, OLV, CLV, OLV/PM, AOLV/PM, CLV/PM Closed: Activates High Slip Braking to stop the drive.	*222*
6A	Drive Enable	All Modes Open: Drive disabled. If this input is opened during run, then the drive will stop as specified by b1-03. Closed: Ready for operation.	*222*
71	Speed/Torque Control Switch	V/f, V/f w/PG, OLV, CLV, OLV/PM, AOLV/PM, CLV/PM Open: Speed Control Closed: Torque Control	*223*
72	Zero Servo	V/f, V/f w/PG, OLV, CLV, OLV/PM, AOLV/PM, CLV/PM Closed: Zero Servo enabled	*223*
75	Up 2 Command	All Modes Used to control the bias added to the frequency reference by the Up/Down 2 function. The Up 2 and Down 2 commands must always be used in conjunction with one another.	*223*
76	Down 2 Command		*223*
77	ASR Gain Switch	V/f, V/f w/PG, OLV, CLV, OLV/PM, AOLV/PM, CLV/PM Open: ASR proportional gain 1 (C5-01) Closed: ASR proportional gain 2 (C5-03)	*223*
78	External Torque Reference Polarity Inversion	V/f, V/f w/PG, OLV, CLV, OLV/PM, AOLV/PM, CLV/PM Open: Forward torque reference Closed: Reverse polarity	*223*

上正科技有限公司
購買、維修 此手冊零組件
電話： 037-466333
Email: service@repairtw.com
Line id: @zzzz
www.repairtw.com

H1 Multi-Function Digital Input Selections			
H1-□□ Setting	Function	Description	Page
7A	KEB Ride-Thru 2 (N.C.)	All Modes Open: KEB Ride-Thru 2 enabled. Drive disregards L2-29 and performs Single Drive KEB Ride-Thru 2.	224
7B	KEB Ride-Thru 2 (N.O.)	All Modes Closed: KEB Ride-Thru 2 enabled. Drive disregards L2-29 and performs Single Drive KEB Ride-Thru 2.	224
7C	Short Circuit Braking (N.O.)	V/f V/f w/PG OLV CLV OLV/PM AOLV/PM CLV/PM Closed: Short Circuit Braking enabled	224
7D	Short Circuit Braking (N.C.)	V/f V/f w/PG OLV CLV OLV/PM AOLV/PM CLV/PM Open: Short Circuit Braking enabled	224
7E	Forward/Reverse Detection (V/f Control with Simple PG feedback)	V/f V/f w/PG OLV CLV OLV/PM AOLV/PM CLV/PM Direction of rotation detection (for V/f with Simple PG Feedback)	224
7F	Bi-Directional PID Output Selection	All Modes Open: Bi-directional output is disabled. Closed: Bi-directional output is enabled.	224
90 to 97	DriveWorksEZ Digital Inputs 1 to 8	All Modes Reserved for DWEZ input functions	224
9F	DriveWorksEZ Disable	All Modes Open: DWEZ enabled Closed: DWEZ disabled	224

■ H2: Multi-Function Digital Outputs

上正科技有限公司
購買、維修 此手冊零組件
電話： 037-466333
Email service@repairtw.com
Line id: @zzzz
www.repairtw.com

No.(Addr.)	Name	Description	Setting	Page
H2-01 (40BH)	Terminal M1-M2 function selection (relay)	All Modes Refer to H2 Multi-Function Digital Output Settings on page 427 for a description of setting values.	Default: 0 Min: 0 Max: 192	224
H2-02 (40CH)	Terminal M3-M4 function selection (relay)		Default: 1 Min: 0 Max: 192	224
H2-03 (40DH)	Terminal M5-M6 function selection (relay)		Default: 2 Min: 0 Max: 192	224
H2-06 (437H)	Watt Hour Output Unit Selection	All Modes Outputs a 200 ms pulse signal when the watt-hour counter increases by the units selected. 0: 0.1 kWh units 1: 1 kWh units 2: 10 kWh units 3: 100 kWh units 4: 1000 kWh units	Default: 0 Min: 0 Max: 4	234

H2 Multi-Function Digital Output Settings			
H2-□□ Setting	Function	Description	Page
0	During Run	All Modes Closed: A Run command is active or voltage is output.	225
1	Zero Speed	All Modes Open: Output frequency is above the minimum output frequency set in E1-09. Closed: Output frequency is below the minimum output frequency set in E1-09.	225
2	Speed Agree 1	All Modes Closed: Output frequency equals the speed reference (plus or minus the hysteresis set to L4-02).	226
3	User-set Speed Agree 1	All Modes Closed: Output frequency and speed reference equal L4-01 (plus or minus the hysteresis set to L4-02).	226
4	Frequency Detection 1	All Modes Closed: Output frequency is less than or equal to the value in L4-01 with hysteresis determined by L4-02.	227
5	Frequency Detection 2	All Modes Closed: Output frequency is greater than or equal to the value in L4-01 with hysteresis determined by L4-02.	227
6	Drive Ready	All Modes Closed: Power up is complete and the drive is ready to accept a Run command.	227

H2 Multi-Function Digital Output Settings			
H2-□□ Setting	Function	Description	Page
7	DC bus Undervoltage	All Modes Closed: DC bus voltage is below the Uv trip level set in L2-05.	228
8	During Baseblock (N.O.)	All Modes Closed: Drive has entered the baseblock state (no output voltage).	228
9	Frequency Reference Source	All Modes Open: External Reference 1 or 2 supplies the frequency reference (set in b1-01 or b1-15). Closed: Digital operator supplies the frequency reference.	228
A	Run Command Source	All Modes Open: External Reference 1 or 2 supplies the Run command (set in b1-02 or b1-16). Closed: Digital operator supplies the Run command.	228
B	Torque Detection 1 (N.O.)	All Modes Closed: An overtorque or undertorque situation has been detected.	228
C	Frequency Reference Loss	All Modes Closed: Analog frequency reference has been lost.	228
D	Braking Resistor Fault	All Modes Closed: Braking resistor or transistor is overheated or faulted out.	228
E	Fault	All Modes Closed: Fault occurred.	228
F	Through Mode	All Modes Set this value when using the terminal in the pass-through mode.	229
10	Minor Fault	All Modes Closed: An alarm has been triggered, or the IGBTs have reached 90% of their expected life span.	229
11	Fault Reset Command Active	All Modes Closed: A command has been entered to clear a fault via the input terminals or from the serial network.	229
12	Timer Output	All Modes Closed: Timer output.	229
13	Speed Agree 2	All Modes Closed: When drive output frequency equals the frequency reference ±L4-04.	229
14	User-set Speed Agree 2	All Modes Closed: When the drive output frequency is equal to the value in L4-03 ±L4-04.	229
15	Frequency Detection 3	All Modes Closed: When the drive output frequency is less than or equal to the value in L4-03 ±L4-04.	230
16	Frequency Detection 4	All Modes Closed: When the output frequency is greater than or equal to the value in L4-03 ±L4-04.	230
17	Torque Detection 1 (N.C.)	All Modes Open: Overtorque or undertorque has been detected.	228
18	Torque Detection 2 (N.O.)	All Modes Closed: Overtorque or undertorque has been detected.	228
19	Torque Detection 2 (N.C.)	All Modes Open: Overtorque or undertorque has been detected.	228
1A	During Reverse	All Modes Closed: Drive is running in the reverse direction.	231
1B	During Baseblock (N.C.)	All Modes Open: Drive has entered the baseblock state (no output voltage).	231
1C	Motor 2 Selection	V/f V/f w/PG OLV CLV OLV/PM AOLV/PM CLV/PM Closed: Motor 2 is selected by a digital input (H1-□□ = 16)	231
1D	During Regeneration	V/f V/f w/PG OLV CLV OLV/PM AOLV/PM CLV/PM Closed: Motor is regenerating energy into the drive.	231
1E	Restart Enabled	All Modes Closed: An automatic restart is performed	231

仁正科技有限公司
購買、維修此手冊零組件
電話： 037-466333
Email: service@repairtw.com
line id: @zzzz
www.repairtw.com

H2 Multi-Function Digital Output Settings			
H2-□□ Setting	**Function**	**Description**	**Page**
1F	Motor Overload Alarm (oL1)	All Modes Closed: oL1 is at 90% of its trip point or greater. An oH3 situation also triggers this alarm.	*231*
20	Drive Overheat Pre-alarm (oH)	All Modes Closed: Heatsink temperature exceeds the parameter L8-02 value.	*231*
22	Mechanical Weakening Detection	All Modes Closed: Mechanical weakening detected.	*231*
2F	Maintenance Period	All Modes Closed: Cooling fan, electrolytic capacitors, IGBTs, or the soft charge bypass relay may require maintenance.	*232*
30	During Torque Limit	V/f V/f w/PG OLV CLV OLV/PM AOLV/PM CLV/PM Closed: When the torque limit has been reached.	*232*
31	During Speed Limit	V/f V/f w/PG OLV CLV OLV/PM AOLV/PM CLV/PM Closed: Speed limit has been reached.	*232*
32	During Speed Limit in Torque Control	V/f V/f w/PG OLV CLV OLV/PM AOLV/PM CLV/PM Closed: Speed limit has been reached while using Torque Control.	*232*
33	Zero Servo Complete	V/f V/f w/PG OLV CLV OLV/PM AOLV/PM CLV/PM Closed: Zero Servo operation has finished.	*232*
37	During Frequency Output	All Modes Open: Either the drive has stopped or baseblock, DC Injection Braking, or Initial Excitation is being performed. Closed: Drive is running the motor (not in a baseblock state and DC Injection is not being performed).	*232*
38	Drive Enabled	All Modes Closed: Multi-function input set for “Drive enable” is closed (H1-□□ = 6A)	*232*
39	Watt Hour Pulse Output	All Modes Output units are determined by H2-06. Outputs a pulse every 200 ms to indicate the kWh count.	*232*
3C	LOCAL/REMOTE Status	All Modes Open: REMOTE Closed: LOCAL	*233*
3D	During Speed Search	V/f V/f w/PG OLV CLV OLV/PM AOLV/PM CLV/PM Closed: Speed Search is being executed.	*233*
3E	PID Feedback Low	All Modes Closed: PID feedback level is too low.	*233*
3F	PID Feedback High	All Modes Closed: The PID feedback level is too high.	*233*
4A	During KEB Ride-Thru	All Modes Closed: KEB Ride-Thru is being performed.	*233*
4B	During Short-Circuit Braking	V/f V/f w/PG OLV CLV OLV/PM AOLV/PM CLV/PM Closed: Short Circuit Braking is active.	*233*
4C	During Fast Stop	All Modes Closed: A Fast Stop command has been entered from the operator or input terminals.	*233*
4D	oH Pre-alarm Time Limit	All Modes Closed: oH pre-alarm time limit has passed.	*233*
4E	Braking Transistor Fault (rr)	All Modes Closed: The built-in dynamic braking transistor failed.	*233*
4F	Braking Resistor Overheat (oH)	All Modes Closed: The dynamic braking resistor has overheated.	*233*
60	Internal Cooling Fan Alarm	All Modes Closed: Internal cooling fan alarm	*233*

[illegible]科技有限公司
購買、維修 此手冊零組件
電話： 037-466333
Email: service@repairtw.com
Line id: @zzzz
www.repairtw.com

H2 Multi-Function Digital Output Settings			
H2-□□ Setting	Function	Description	Page
61	Rotor Position Detection Complete	V/f V/f w/PG OLV CLV OLV/PM AOLV/PM CLV/PM Closed: Drive has successfully detected the rotor position of the PM motor.	233
90 to 92	DriveWorksEZ Digital Outputs 1 to 3	All Modes Reserved for DWEZ digital output functions.	233
100 to 192	Function 0 to 92 with Inverse Output	All Modes Inverts the output switching of the multi-function output functions. Set the last two digits of 1□□ to reverse the output signal of that specific function.	233

■ H3: Multi-Function Analog Inputs

No.(Addr.)	Name	Description	Setting	Page
H3-01 (410H)	Terminal A1 Signal Level Selection	All Modes 0: 0 to 10 V 1: –10 to 10 V	Default: 0 Min: 0 Max: 1	234
H3-02 (434H)	Terminal A1 Function Selection	All Modes Sets the function of terminal A1.	Default: 0 Min: 0 Max: 31	234
H3-03 (411H) RUN	Terminal A1 Gain Setting	All Modes Sets the level of the input value selected in H3-02 when 10 V is input at terminal A1.	Default: 100.0% Min: -999.9% Max: 999.9%	234
H3-04 (412H) RUN	Terminal A1 Bias Setting	All Modes Sets the level of the input value selected in H3-02 when 0 V is input at terminal A1.	Default: 0.0% Min: -999.9% Max: 999.9%	234
H3-05 (413H)	Terminal A3 Signal Level Selection	All Modes 0: 0 to 10 V 1: –10 to 10 V	Default: 0 Min: 0 Max: 1	235
H3-06 (414H)	Terminal A3 Function Selection	All Modes Sets the function of terminal A3.	Default: 2 Min: 0 Max: 31	235
H3-07 (415H) RUN	Terminal A3 Gain Setting	All Modes Sets the level of the input value selected in H3-06 when 10 V is input at terminal A3.	Default: 100.0% Min: -999.9% Max: 999.9%	236
H3-08 (416H) RUN	Terminal A3 Bias Setting	All Modes Sets the level of the input value selected in H3-06 when 0 V is input at terminal A3.	Default: 0.0% Min: -999.9% Max: 999.9%	236
H3-09 (417H)	Terminal A2 Signal Level Selection	All Modes 0: 0 to 10 V 1: –10 to 10 V 2: 4 to 20 mA 3: 0 to 20 mA **Note:** Use DIP switch S1 to set input terminal A2 for a current or a voltage input signal.	Default: 2 Min: 0 Max: 3	236
H3-10 (418H)	Terminal A2 Function Selection	All Modes Sets the function of terminal A2.	Default: 0 Min: 0 Max: 31	236
H3-11 (419H) RUN	Terminal A2 Gain Setting	All Modes Sets the level of the input value selected in H3-10 when 10 V (20 mA) is input at terminal A2.	Default: 100.0% Min: -999.9% Max: 999.9%	236
H3-12 (41AH) RUN	Terminal A2 Bias Setting	All Modes Sets the level of the input value selected in H3-10 when 0 V (0 or 4 mA) is input at terminal A2.	Default: 0.0% Min: -999.9% Max: 999.9%	236
H3-13 (41BH)	Analog Input Filter Time Constant	All Modes Sets a primary delay filter time constant for terminals A1, A2, and A3. Used for noise filtering.	Default: 0.03 s Min: 0.00 s Max: 2.00 s	236
H3-14 (41CH)	Analog Input Terminal Enable Selection	All Modes Determines which of the analog input terminals will be enabled when a digital input programmed for "Analog input enable" (H1-□□ = C) is activated. 1: Terminal A1 only 2: Terminal A2 only 3: Terminals A1 and A2 only 4: Terminal A3 only 5: Terminals A1 and A3 6: Terminals A2 and A3 7: All terminals enabled	Default: 7 Min: 1 Max: 7	237

上正科技有限公司
購買、維修 此手冊零組件
電話：037-466333
Email: service@repairtw.com
Line id: @zzzz
www.repairtw.com

H3 Multi-Function Analog Input Settings			
H3-□□ Setting	**Function**	**Description**	**Page**
0	Frequency Bias	All Modes 10 V = E1-04 (maximum output frequency)	*237*
1	Frequency Gain	All Modes 0 to 10 V signal allows a setting of 0 to 100%. -10 to 0 V signal allows a setting of -100 to 0%.	*237*
2	Auxiliary Frequency Reference 1 (used as a Multi-Step Speed 2)	All Modes 10 V = E1-04 (maximum output frequency)	*237*
3	Auxiliary Frequency Reference 2 (3rd step analog)	All Modes 10 V = E1-04 (maximum output frequency)	*238*
4	Output Voltage Bias	V/f V/f w/PG OLV CLV OLV/PM AOLV/PM CLV/PM 10 V = E1-05 (motor rated voltage)	*238*
5	Accel/Decel Time Gain	All Modes 10 V = 100%	*238*
6	DC Injection Braking Current	V/f V/f w/PG OLV CLV OLV/PM AOLV/PM CLV/PM 10 V = Drive rated current	*238*
7	Overtorque/Undertorque Detection Level	All Modes 10 V = Drive rated current (V/f, V/fw/PG) 10 V = Motor rated torque (OLV, CLV, OLV/PM, AOLV/PM, CLV/PM)	*238*
8	Stall Prevention Level During Run	V/f V/f w/PG OLV CLV OLV/PM AOLV/PM CLV/PM 10 V = Drive rated current	*238*
9	Output Frequency Lower Limit Level	All Modes 10 V = E1-04 (maximum output frequency)	*239*
B	PID Feedback	All Modes 10 V = 100%	*239*
C	PID Setpoint	All Modes 10 V = 100%	*239*
D	Frequency Bias	All Modes 10 V = E1-04 (maximum output frequency)	*239*
E	Motor Temperature (PTC input)	All Modes 10 V = 100%	*239*
F	Through Mode	All Modes Set this value when using the terminal in the pass-through mode.	*239*
10	Forward Torque Limit	V/f V/f w/PG OLV CLV OLV/PM AOLV/PM CLV/PM 10 V = Motor rated torque	*239*
11	Reverse Torque Limit	V/f V/f w/PG OLV CLV OLV/PM AOLV/PM CLV/PM 10 V = Motor rated torque	*239*
12	Regenerative Torque Limit	V/f V/f w/PG OLV CLV OLV/PM AOLV/PM CLV/PM 10 V = Motor rated torque	*239*
13	Torque Reference/Torque Limit	V/f V/f w/PG OLV CLV OLV/PM AOLV/PM CLV/PM 10 V = Motor rated torque	*239*
14	Torque Compensation	V/f V/f w/PG OLV CLV OLV/PM AOLV/PM CLV/PM 10 V = Motor rated torque	*239*
15	General Torque Limit	V/f V/f w/PG OLV CLV OLV/PM AOLV/PM CLV/PM 10 V = Motor rated torque	*239*

上中科技有限公司
購買、維修 此手冊零組件
電話: 037-466333
Email: service@repairtw.com
Line Id: @zzzz
www.repairtw.com

H3 Multi-Function Analog Input Settings			
H3-□□ Setting	Function	Description	Page
16	Differential PID Feedback	All Modes 10 V = 100%	239
1F	Through Mode	All Modes Set this value when using the terminal in the pass-through mode.	239
30 to 32	DriveWorksEZ Analog Input 1 to 3	All Modes Output is determined by the function selected using DWEZ.	239

■ H4: Multi-Function Analog Outputs

No.(Addr.)	Name	Description	Setting	Page
H4-01 (41DH)	Multi-Function Analog Output Terminal FM Monitor Selection	All Modes Selects the data to be output through multi-function analog output terminal FM. Set the desired monitor parameter to the digits available in U□-□□. For example, enter “103” for U1-03.	Default: 102 Min: 000 Max: 999	239
H4-02 (41EH) RUN	Multi-Function Analog Output Terminal FM Gain	All Modes Sets the signal level at terminal FM that is equal to 100% of the selected monitor value.	Default: 100.0% Min: -999.9% Max: 999.9%	240
H4-03 (41FH) RUN	Multi-Function Analog Output Terminal FM Bias	All Modes Sets the signal level at terminal FM that is equal to 0% of the selected monitor value.	Default: 0.0% Min: -999.9% Max: 999.9%	240
H4-04 (420H)	Multi-Function Analog Output Terminal AM Monitor Selection	All Modes Selects the data to be output through multi-function analog output terminal AM. Set the desired monitor parameter to the digits available in U□-□□. For example, enter “103” for U1-03.	Default: 103 Min: 000 Max: 999	239
H4-05 (421H) RUN	Multi-Function Analog Output Terminal AM Gain	All Modes Sets the signal level at terminal AM that is equal to 100% of the selected monitor value.	Default: 50.0% Min: -999.9% Max: 999.9%	240
H4-06 (422H) RUN	Multi-Function Analog Output Terminal AM Bias	All Modes Sets the signal level at terminal AM that is equal to 0% of the selected monitor value.	Default: 0.0% Min: -999.9% Max: 999.9%	240
H4-07 (423H)	Multi-Function Analog Output Terminal FM Signal Level Selection	All Modes 0: 0 to 10 V 1: –10 to 10 V 2: 4 to 20 mA	Default: 0 Min: 0 Max: 1	241
H4-08 (424H)	Multi-Function Analog Output Terminal AM Signal Level Selection	All Modes 0: 0 to 10 V 1: –10 to 10 V 2: 4 to 20 mA	Default: 0 Min: 0 Max: 1	241

上正科技有限公司
購買、維修 此半導零組件
電話： 037-466333
Email: service@repairtw.com
Line id: @zzzz
www.repairtw.com

■ H5: MEMOBUS/Modbus Serial Communication

No.(Addr.)	Name	Description	Setting	Page
H5-01 (425H) <32>	Drive Node Address	All Modes Selects drive station node number (address) for MEMOBUS/Modbus terminals R+, R-, S+, S-. Cycle power for the setting to take effect.	Default: 1F Min: 0 Max: FFH	482
H5-02 (426H)	Communication Speed Selection	All Modes 0: 1200 bps 1: 2400 bps 2: 4800 bps 3: 9600 bps 4: 19200 bps 5: 38400 bps 6: 57600 bps 7: 76800 bps 8: 115200 bps Cycle power for the setting to take effect.	Default: 3 Min: 0 Max: 8	482
H5-03 (427H)	Communication Parity Selection	All Modes 0: No parity 1: Even parity 2: Odd parity Cycle power for the setting to take effect.	Default: 0 Min: 0 Max: 2	482

No.(Addr.)	Name	Description	Setting	Page
H5-04 (428H)	Stopping Method After Communication Error (CE)	All Modes 0: Ramp to stop 1: Coast to stop 2: Fast Stop 3: Alarm only	Default: 0 Min: 0 Max: 3	482
H5-05 (429H)	Communication Fault Detection Selection	All Modes 0: Disabled 1: Enabled. If communication is lost for more than two seconds, a CE fault will occur.	Default: 0 Min: 0 Max: 1	482
H5-06 (42AH)	Drive Transmit Wait Time	All Modes Set the wait time between receiving and sending data.	Default: 5 ms Min: 5 ms Max: 65 ms	483
H5-07 (42BH)	RTS Control Selection	All Modes 0: Disabled. RTS is always on. 1: Enabled. RTS turns on only when sending.	Default: 1 Min: 0 Max: 1	483
H5-09 (435H)	CE Detection Time	All Modes Sets the time required to detect a communications error. Adjustment may be needed when networking several drives.	Default: 2.0 s Min: 0.0 s Max: 10.0 s	483
H5-10 (436H)	Unit Selection for MEMOBUS/ Modbus Register 0025H	All Modes 0: 0.1 V units 1: 1 V units	Default: 0 Min: 0 Max: 1	483
H5-11 (43CH)	Communications ENTER Function Selection	All Modes 0: Drive requires an Enter command before accepting any changes to parameter settings. 1: Parameter changes are activated immediately without the Enter command (same as V7).	Default: 1 Min: 0 Max: 1	483
H5-12 (43DH)	Run Command Method Selection	All Modes 0: FWD/Stop, REV/Stop 1: Run/Stop, FWD/REV	Default: 0 Min: 0 Max: 1	484

<32> If this parameter is set to 0, the drive will be unable to respond to MEMOBUS/Modbus commands.

■ H6: Pulse Train Input/Output

上正科技有限公司
購買、維修 此手冊零組件
電話： 037-466333
Email service@repairtw.com
Line Id: @2222
www.repairtw.com

No.(Addr.)	Name	Description	Setting	Page
H6-01 (42CH)	Pulse Train Input Terminal RP Function Selection	All Modes 0: Frequency reference 1: PID feedback value 2: PID setpoint value 3: V/f Control with Simple PG feedback (possible only when using motor 1 in V/f Control)	Default: 0 Min: 0 Max: 3	241
H6-02 (42DH) RUN	Pulse Train Input Scaling	All Modes Sets the terminal RP input signal frequency that is equal to 100% of the value selected in H6-01.	Default: 1440 Hz Min: 1000 Hz Max: 32000 Hz	242
H6-03 (42EH) RUN	Pulse Train Input Gain	All Modes Sets the level of the value selected in H6-01 when a frequency with the value set in H6-02 is input.	Default: 100.0% Min: 0.0% Max: 1000.0%	243
H6-04 (42FH) RUN	Pulse Train Input Bias	All Modes Sets the level of the value selected in H6-01 when 0 Hz is input.	Default: 0.0% Min: -100.0% Max: 100.0%	243
H6-05 (430H) RUN	Pulse Train Input Filter Time	All Modes Sets the pulse train input filter time constant.	Default: 0.10 s Min: 0.00 s Max: 2.00 s	243
H6-06 (431H) RUN	Pulse Train Monitor Selection	All Modes Select the pulse train monitor output function (value of the □-□□ part of U□-□□). Example: To select U5-01, set “501”.	Default: 102 Min: 000 Max: 809	243
H6-07 (432H) RUN	Pulse Train Monitor Scaling	All Modes Sets the terminal MP output signal frequency when the monitor value is 100%. To have the pulse train monitor output equal the output frequency, set H6-06 to 2 and H6-07 to 0.	Default: 1440 Hz Min: 0 Hz Max: 32000 Hz	243
H6-08 (43FH)	Pulse Train Input Minimum Frequency	All Modes Sets the minimum frequency for the pulse train input to be detected. Enabled when H6-01 = 0, 1, or 2.	Default: 0.5 Hz Min: 0.1 Hz Max: 1000.0 Hz	243

◆ L: Protection Function

L parameters provide protection to the drive and motor, such as: control during momentary power loss, Stall Prevention, frequency detection, fault restarts, overtorque detection, torque limits, and other types of hardware protection.

■ L1: Motor Protection

No. (Addr.)	Name	Description	Setting	Page
L1-01 (480H)	Motor Overload Protection Selection	All Modes 0: Disabled 1: General purpose motor (standard fan cooled) 2: Drive dedicated motor with a speed range of 1:10 3: Vector motor with a speed range of 1:100 4: PM motor with variable torque 5: PM motor with constant torque control 6: General purpose motor (50 Hz) The drive may not be able to provide protection when multiple motors are used, even if overload is enabled in L1-01. Set L1-01 to 0 and install separate thermal relay to each motor.	Default: <10> Min: 0 Max: 6	244
L1-02 (481H)	Motor Overload Protection Time	All Modes Sets the motor thermal overload protection (oL1) time.	Default: 1.0 min Min: 0.1 min Max: 5.0 min	246
L1-03 (482H)	Motor Overheat Alarm Operation Selection (PTC input)	All Modes Sets operation when the motor temperature analog input (H3-02, H3-06, or H3-10 = E) exceeds the oH3 alarm level. 0: Ramp to stop 1: Coast to stop 2: Fast Stop (decelerate to stop using the deceleration time in C1-09) 3: Alarm only (“oH3” will flash)	Default: 3 Min: 0 Max: 3	248
L1-04 (483H)	Motor Overheat Fault Operation Selection (PTC input)	All Modes Sets stopping method when the motor temperature analog input (H3-02, H3-06, or H3-10 = E) exceeds the oH4 fault level. 0: Ramp to stop 1: Coast to stop 2: Fast Stop (decelerate to stop using the deceleration time in C1-09)	Default: 1 Min: 0 Max: 2	248
L1-05 (484H)	Motor Temperature Input Filter Time (PTC input)	All Modes Adjusts the filter for the motor temperature analog input (H3-02, H3-06, or H3-10 = E).	Default: 0.20 s Min: 0.00 s Max: 10.00 s	248
L1-13 (46DH)	Continuous Electrothermal Operation Selection	All Modes 0: Disabled 1: Enabled	Default: 1 Min: 0 Max: 1	248

<10> Default setting is determined by the control mode (A1-02).

上正科技有限公司
購買、維修 此手冊零組件
電話： 037-466333
Email: service@repairtw.com
Line Id: @zzzz
www.repairtw.com

■ L2: Momentary Power Loss Ride-Thru

No. (Addr.)	Name	Description	Setting	Page
L2-01 (485H)	Momentary Power Loss Operation Selection	All Modes 0: Disabled. Drive trips on (Uv1) fault when power is lost. 1: Recover within the time set in L2-02. Uv1 will be detected if power loss is longer than L2-02. 2: Recover as long as CPU has power. Uv1 is not detected. 3: KEB deceleration for the time set to L2-02. 4: KEB deceleration as long as CPU has power. 5: KEB deceleration to stop.	Default: 0 Min: 0 Max: 5	249
L2-02 (486H)	Momentary Power Loss Ride-Thru Time	All Modes Sets the Power Loss Ride-Thru time. Enabled only when L2-01 = 1 or 3.	Default: <9> Min: 0.0 s Max: 25.5 s	254
L2-03 (487H)	Momentary Power Loss Minimum Baseblock Time	All Modes Sets the minimum wait time for residual motor voltage decay before the drive output reenergizes after performing Power Loss Ride-Thru. Increasing the time set to L2-03 may help if overcurrent or overvoltage occur during Speed Search or during DC Injection Braking.	Default: <9> Min: 0.1 s Max: 5.0 s	254
L2-04 (488H)	Momentary Power Loss Voltage Recovery Ramp Time	V/f V/f w/PG OLV CLV OLV/PM AOLV/PM CLV/PM Sets the time for the output voltage to return to the preset V/f pattern during Speed Search.	Default: <9> Min: 0.0 s Max: 5.0 s	254
L2-05 (489H)	Undervoltage Detection Level (Uv)	All Modes Sets the DC bus undervoltage trip level.	Default: <18> <33> Min: 150 Vdc Max: 210 Vdc <18>	254
L2-06 (48AH)	KEB Deceleration Time	All Modes Sets the time required to decelerate from the speed when KEB was activated to zero speed.	Default: 0.00 s Min: 0.00 s Max: 6000.0 s <12>	254
L2-07 (48BH)	KEB Acceleration Time	All Modes Sets the time to accelerate to the frequency reference when momentary power loss is over. If set to 0.0, the active acceleration time is used.	Default: 0.00 s Min: 0.00 s Max: 6000.0 s <12>	254

No. (Addr.)	Name	Description	Setting	Page
L2-08 (48CH)	Frequency Gain at KEB Start	V/f V/f w/PG OLV CLV OLV/PM AOLV/PM CLV/PM Sets the percentage of output frequency reduction at the beginning of deceleration when the KEB Ride-Thru function is started. Reduction = (slip frequency before KEB) × L2-08 × 2	Default: 100% Min: 0% Max: 300%	255
L2-10 (48EH)	KEB Detection Time (Minimum KEB Time)	All Modes Sets the time to perform KEB Ride-Thru.	Default: 50 ms Min: 0 ms Max: 2000 ms	255
L2-11 (461H)	DC Bus Voltage Setpoint during KEB	All Modes Sets the desired value of the DC bus voltage during KEB Ride-Thru.	Default: <18> <33> [E1-01] × 1.22 Min: 150 Vdc Max: 400 Vdc <18>	255
L2-29 (475H)	KEB Method Selection	All Modes 0: Single Drive KEB Ride-Thru 1 1: Single Drive KEB Ride-Thru 2 2: System KEB Ride-Thru 1 3: System KEB Ride-Thru 2	Default: 0 Min: 0 Max: 3	255

<9> Default setting is determined by the drive model (o2-04) and duty selection (C6-01).
<12> Setting range value is dependent on the units selected for the accel/decel time (C1-10). When C1-10 = 0 (units of 0.01 s), the setting range becomes 0.00 to 600.00 s.
<18> Values shown here are for 200 V class drives. Double the value when using a 400 V class drive.
<33> Default setting value is dependent on the setting for the input voltage (E1-01).

■ L3: Stall Prevention

No. (Addr.)	Name	Description	Setting	Page
L3-01 (48FH)	Stall Prevention Selection during Acceleration	V/f V/f w/PG OLV CLV OLV/PM AOLV/PM CLV/PM 0: Disabled. 1: General purpose. Acceleration is paused as long as the current is above the L3-02 setting. 2: Intelligent. Accelerate in the shortest possible time without exceeding the L3-02 level. **Note:** Setting 2 is not available when using OLV/PM.	Default: 1 Min: 0 Max: 2	256
L3-02 (490H)	Stall Prevention Level during Acceleration	V/f V/f w/PG OLV CLV OLV/PM AOLV/PM CLV/PM Used when L3-01 = 1 or 2. 100% is equal to the drive rated current.	Default: <35> Min: 0% Max: 150% <35>	257
L3-03 (491H)	Stall Prevention Limit during Acceleration	V/f V/f w/PG OLV CLV OLV/PM AOLV/PM CLV/PM Sets Stall Prevention lower limit during acceleration when operating in the constant power range. Set as a percentage of the drive's rated current.	Default: 50% Min: 0% Max: 100%	257
L3-04 (492H)	Stall Prevention Selection during Deceleration	All Modes 0: Disabled. Deceleration at the active deceleration rate. An ov fault may occur. 1: General purpose. Deceleration is paused when the DC bus voltage exceeds the Stall Prevention level. 2: Intelligent. Decelerate as fast as possible while avoiding ov faults. 3: Stall Prevention with braking resistor. Stall Prevention during deceleration is enabled in coordination with dynamic braking. 4: Overexcitation Deceleration. Decelerates while increasing the motor flux. 5: Overexcitation Deceleration 2. Adjust the deceleration rate according to the DC bus voltage.	Default: 1 Min: 0 Max: 5 <34>	258
L3-05 (493H)	Stall Prevention Selection during Run	V/f V/f w/PG OLV CLV OLV/PM AOLV/PM CLV/PM 0: Disabled. Drive runs at a set frequency. A heavy load may cause speed loss. 1: Decel time 1. Uses the deceleration time set to C1-02 while Stall Prevention is performed. 2: Decel time 2. Uses the deceleration time set to C1-04 while Stall Prevention is performed.	Default: 1 Min: 0 Max: 2	259
L3-06 (494H)	Stall Prevention Level during Run	V/f V/f w/PG OLV CLV OLV/PM AOLV/PM CLV/PM Enabled when L3-05 is set to 1 or 2. 100% is equal to the drive rated current.	Default: <35> Min: 30% Max: 150% <35>	259
L3-11 (4C7H)	Overvoltage Suppression Function Selection	All Modes Enables or disables the ov suppression function, which allows the drive to change the output frequency as the load changes to prevent an ov fault. 0: Disabled 1: Enabled	Default: 0 Min: 0 Max: 1	260
L3-17 (462H) <18>	Target DC Bus Voltage for Overvoltage Suppression and Stall Prevention	All Modes Sets the desired value for the DC bus voltage during overvoltage suppression and Stall Prevention during deceleration.	Default: 370 Vdc <33> Min: 150 Vdc Max: 400 Vdc <33>	260
L3-20 (465H)	DC Bus Voltage Adjustment Gain	All Modes Sets the proportional gain for KEB Ride-Thru, Stall Prevention, and overvoltage suppression.	Default: <10> Min: 0.00 Max: 5.00	260

原廠內部用版權公司 購買、維修、此卡印零組件 電話：037-466333 email：service@repairtw.com line id：@zzz www.repairtw.com

No. (Addr.)	Name	Description	Setting	Page
L3-21 (466H)	Accel/Decel Rate Calculation Gain	All Modes Sets the proportional gain used to calculate the deceleration rate during KEB Ride-Thru, ov suppression function, and Stall Prevention during deceleration (L3-04 = 2).	Default: 1.00 Min: 0.10 Max: 10.00	261
L3-22 (4F9H)	Deceleration Time at Stall Prevention during Acceleration	V/f, V/f w/PG, OLV, CLV, OLV/PM, AOLV/PM, CLV/PM Sets the deceleration time used for Stall Prevention during acceleration in OLV/PM.	Default: 0.0 s Min: 0.0 s Max: 6000 s	257
L3-23 (4FDH)	Automatic Reduction Selection for Stall Prevention during Run	V/f, V/f w/PG, OLV, CLV, OLV/PM, AOLV/PM, CLV/PM 0: Sets the Stall Prevention level set in L3-06 that is used throughout the entire frequency range. 1: Automatic Stall Prevention level reduction in the constant output range. The lower limit value is 40% of L3-06.	Default: 0 Min: 0 Max: 1	259
L3-24 (46EH)	Motor Acceleration Time for Inertia Calculations	V/f, V/f w/PG, OLV, CLV, OLV/PM, AOLV/PM, CLV/PM Sets the time needed to accelerate the uncoupled motor at rated torque from stop to the maximum frequency.	Default: <8> <9> <14> Min: 0.001 s Max: 10.000 s	261
L3-25 (46FH)	Load Inertia Ratio	V/f, OLV, OLV/PM, AOLV/PM Sets the ratio between the motor and machine inertia.	Default: 1.0 Min: 1.0 Max: 1000.0	261
L3-26 (455H)	Additional DC Bus Capacitors	All Modes When DC bus capacitors have been added externally, be sure to add those values to the internal capacitor table for proper DC bus calculations.	Default: 0 µF Min: 0 µF Max: 65000 µF	262
L3-27 (456H)	Stall Prevention Detection Time	V/f, V/f w/PG, OLV, OLV/PM Sets the time the current must exceed the Stall Prevention level to activate Stall Prevention.	Default: 50 ms Min: 0 ms Max: 5000 ms	262

<8> Parameter value is changed if E2-11 is manually changed or changed by Auto-Tuning.
<9> Default setting is determined by the drive model (o2-04) and duty selection (C6-01).
<10> Default setting is determined by the control mode (A1-02).
<14> Default setting value is dependent on the motor code set to parameter E5-01.
<18> Values shown here are for 200 V class drives. Double the value when using a 400 V class drive.
<33> Default setting value is dependent on the setting for the input voltage (E1-01).
<34> Setting range is dependent on the control mode (A1-02). When using CLV, OLV/PM, or AOLV/PM, the setting range is 0 to 2 s.
<35> The upper limit of the setting range is determined by the values set to the duty selection (C6-01) and the carrier frequency reduction selection (L8-38).

Email: service@repairtw.com
Line id: @zzzz
www.repairtw.com

■ L4: Speed Detection

No. (Addr.)	Name	Description	Setting	Page
L4-01 (499H)	Speed Agreement Detection Level	All Modes L4-01 sets the frequency detection level for digital output functions H2-□□ = 2, 3, 4, 5. L4-02 sets the hysteresis or allowable margin for speed detection.	Default: 0.0 Hz Min: 0.0 Hz Max: 400.0 Hz	262
L4-02 (49AH)	Speed Agreement Detection Width		Default: <10> Min: 0.0 Hz Max: 20.0 Hz	262
L4-03 (49BH)	Speed Agreement Detection Level (+/-)	All Modes L4-03 sets the frequency detection level for digital output functions H2-□□ = 13, 14, 15, 16. L4-04 sets the hysteresis or allowable margin for speed detection.	Default: 0.0 Hz Min: -400.0 Hz Max: 400.0 Hz	262
L4-04 (49CH)	Speed Agreement Detection Width (+/-)		Default: <10> Min: 0.0 Hz Max: 20.0 Hz	262
L4-05 (49DH)	Frequency Reference Loss Detection Selection	All Modes 0: Stop. Drive stops when the frequency reference is lost. 1: Run. Drive runs at a reduced speed when the frequency reference is lost.	Default: 0 Min: 0 Max: 1	262
L4-06 (4C2H)	Frequency Reference at Reference Loss	All Modes Sets the percentage of the frequency reference that the drive should run with when the frequency reference is lost.	Default: 80% Min: 0.0% Max: 100.0%	263
L4-07 (470H)	Speed Agreement Detection Selection	All Modes 0: No detection during baseblock. 1: Detection always enabled.	Default: 0 Min: 0 Max: 1	263

<10> Default setting is determined by the control mode (A1-02).

■ L5: Fault Restart

No. (Addr.)	Name	Description	Setting	Page
L5-01 (49EH)	Number of Auto Restart Attempts	All Modes Sets the number of times the drive may attempt to restart after the following faults occur: GF, LF, oC, ov, PF, rH, rr, oL1, oL2, oL3, oL4, STo, Uv1.	Default: 0 Min: 0 Max: 10	264
L5-02 (49FH)	Auto Restart Fault Output Operation Selection	All Modes 0: Fault output not active. 1: Fault output active during restart attempt.	Default: 0 Min: 0 Max: 1	264
L5-04 (46CH)	Fault Reset Interval Time	All Modes Sets the amount of time to wait between performing fault restarts.	Default: 10.0 s Min: 0.5 s Max: 600.0 s	264
L5-05 (467H)	Fault Reset Operation Selection	All Modes 0: Continuously attempt to restart while incrementing restart counter only at a successful restarts (same as F7 and G7). 1: Attempt to restart with the interval time set in L5-04 and increment the restart counter with each attempt (same V7).	Default: 0 Min: 0 Max: 1	264

■ L6: Torque Detection

No. (Addr.)	Name	Description	Setting	Page
L6-01 (4A1H)	Torque Detection Selection 1	All Modes 0: Disabled 1: oL3 detection only active during speed agree, operation continues after detection 2: oL3 detection always active during run, operation continues after detection 3: oL3 detection only active during speed agree, output shuts down on an oL3 fault 4: oL3 detection always active during run, output shuts down on an oL3 fault 5: UL3 detection only active during speed agree, operation continues after detection 6: UL3 detection always active during run, operation continues after detection 7: UL3 detection only active during speed agree, output shuts down on an oL3 fault 8: UL3 detection always active during run, output shuts down on an oL3 fault	Default: 0 Min: 0 Max: 8	265
L6-02 (4A2H)	Torque Detection Level 1	All Modes Sets the overtorque and undertorque detection level.	Default: 150% Min: 0% Max: 300%	266
L6-03 (4A3H)	Torque Detection Time 1	All Modes Sets the time an overtorque or undertorque condition must exist to trigger torque detection 1.	Default: 0.1 s Min: 0.0 s Max: 10.0 s	266
L6-04 (4A4H)	Torque Detection Selection 2	All Modes 0: Disabled 1: oL4 detection only active during speed agree, operation continues after detection 2: oL4 detection always active during run, operation continues after detection 3: oL4 detection only active during speed agree, output shuts down on an oL4 fault 4: oL4 detection always active during run, output shuts down on an oL4 fault 5: UL4 detection only active during speed agree, operation continues after detection 6: UL4 detection always active during run, operation continues after detection 7: UL4 detection only active during speed agree, output shuts down on an oL4 fault 8: UL4 detection always active during run, output shuts down on an oL4 fault	Default: 0 Min: 0 Max: 8	265
L6-05 (4A5H)	Torque Detection Level 2	All Modes Sets the overtorque and undertorque detection level.	Default: 150% Min: 0% Max: 300%	266
L6-06 (4A6H)	Torque Detection Time 2	All Modes Sets the time an overtorque or undertorque condition must exist to trigger torque detection 2.	Default: 0.1 s Min: 0.0 s Max: 10.0 s	266
L6-08 (468H)	Mechanical Weakening Detection Operation	All Modes This function can detect an overtorque or undertorque in a certain speed range as a result of machine fatigue. It is triggered by a specified operation time and uses the oL1 detection settings (L6-01 and L6-03) 0: Mechanical Weakening Detection disabled. 1: Continue running (alarm only). Detected when the speed (signed) is greater than L6-09. 2: Continue running (alarm only). Detected when the speed (not signed) is greater than L6-09. 3: Interrupt drive output (fault). Detected when the speed (signed) is greater than L6-09. 4: Interrupt drive output (fault). Detected when the speed (not signed) is greater than L6-09. 5: Continue running (alarm only). Detected when the speed (signed) is less than L6-09. 6: Continue running (alarm only). Detected when the speed (not signed) is less than L6-09. 7: Interrupt drive output (fault). Detected when the speed (signed) is less than L6-09. 8: Interrupt drive output (fault). Detected when the speed (not signed) is less than L6-09.	Default: 0 Min: 0 Max: 8	266
L6-09 (469H)	Mechanical Weakening Detection Speed Level	All Modes Sets the speed that triggers Mechanical Weakening Detection. When L6-08 is set for an unsigned value, the absolute value is used if the setting is negative.	Default: 110.0% Min: -110.0% Max: 110.0%	267
L6-10 (46AH)	Mechanical Weakening Detection Time	All Modes Sets the time mechanical weakening has to be detected before an alarm or fault is triggered.	Default: 0.1 s Min: 0.0 s Max: 10.0 s	267
L6-11 (46BH)	Mechanical Weakening Detection Start Time	All Modes Sets the operation time (U1-04) required before Mechanical Weakening Detection is active.	Default: 0 Min: 0 Max: 65535	267

上正科技有限公司
購買 維修 此手冊零組件
電話： 037-466333
Email: service@repairtw.com
Line id: @037
www.repairtw.com

■ L7: Torque Limit

No. (Addr.)	Name	Description	Setting	Page
L7-01 (4A7H)	Forward Torque Limit	V/f V/f w/PG OLV CLV OLV/PM AOLV/PM CLV/PM Sets the torque limit value as a percentage of the motor rated torque. Four individual quadrants can be set. 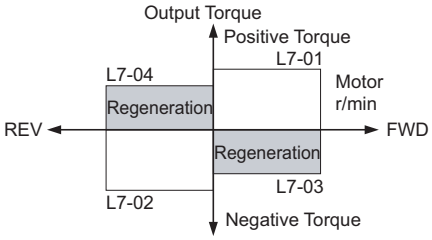	Default: 200% Min: 0% Max: 300%	268
L7-02 (4A8H)	Reverse Torque Limit		Default: 200% Min: 0% Max: 300%	268
L7-03 (4A9H)	Forward Regenerative Torque Limit		Default: 200% Min: 0% Max: 300%	268
L7-04 (4AAH)	Reverse Regenerative Torque Limit		Default: 200% Min: 0% Max: 300%	268
L7-06 (4ACH)	Torque Limit Integral Time Constant	V/f V/f w/PG OLV CLV OLV/PM AOLV/PM CLV/PM Sets the integral time constant for the torque limit.	Default: 200 ms Min: 5 ms Max: 10000 ms	268
L7-07 (4C9H)	Torque Limit Control Method Selection during Accel/Decel	V/f V/f w/PG OLV CLV OLV/PM AOLV/PM CLV/PM 0: Proportional control (changes to integral control at constant speed). Use this setting when acceleration to the desired speed should take precedence over the torque limit. 1: Integral control. Set L7-07 to 1 if the torque limit should take precedence.	Default: 0 Min: 0 Max: 1	268

■ L8: Drive Protection

No. (Addr.)	Name	Description	Setting	Page
L8-01 (4ADH)	Internal Dynamic Braking Resistor Protection Selection (ERF type)	All Modes 0: Resistor overheat protection disabled 1: Resistor overheat protection enabled	Default: 0 Min: 0 Max: 1	269
L8-02 (4AEH)	Overheat Alarm Level	All Modes An overheat alarm will occur if the heatsink temperature exceeds the level set in L8-02.	Default: <9> Min: 50°C Max: 130°C	269
L8-03 (4AFH)	Overheat Pre-Alarm Operation Selection	All Modes 0: Ramp to stop. A fault is triggered. 1: Coast to stop. A fault is triggered. 2: Fast Stop. Decelerate to stop using the deceleration time in C1-09. A fault is triggered. 3: Continue operation. An alarm is triggered. 4: Continue operation at reduced speed as set in L8-19.	Default: 3 Min: 0 Max: 4	269
L8-05 (4B1H)	Input Phase Loss Protection Selection	All Modes Selects the detection of input current phase loss, power supply voltage imbalance, or main circuit electrolytic capacitor deterioration. 0: Disabled 1: Enabled	Default: 1 Min: 0 Max: 1	270
L8-07 (4B3H)	Output Phase Loss Protection Selection	All Modes 0: Disabled 1: Enabled (triggered by a single phase loss) 2: Enabled (triggered when two phases are lost)	Default: 0 Min: 0 Max: 2	270
L8-09 (4B5H)	Output Ground Fault Detection Selection	All Modes 0: Disabled 1: Enabled	Default: <9> Min: 0 Max: 1	271
L8-10 (4B6H)	Heatsink Cooling Fan Operation Selection	All Modes 0: During run only. Fan operates only during run and for L8-11 seconds after stop. 1: Fan always on. Cooling fan operates whenever the drive is powered up.	Default: 0 Min: 0 Max: 1	271
L8-11 (4B7H)	Heatsink Cooling Fan Off Delay Time	All Modes Sets a delay time to shut off the cooling fan after the Run command is removed when L8-10 = 0.	Default: 60 s Min: 0 s Max: 300 s	271
L8-12 (4B8H)	Ambient Temperature Setting	All Modes Enter the ambient temperature. This value adjusts the oL2 detection level.	Default: 40°C Min: -10°C Max: 50°C	271
L8-15 (4BBH)	oL2 Characteristics Selection at Low Speeds	All Modes 0: No oL2 level reduction below 6 Hz. 1: oL2 level is reduced linearly below 6 Hz. It is halved at 0 Hz.	Default: 1 Min: 0 Max: 1	272

上正科技有限公司
購買、維修此手冊零組件
電話： 037-466333
Email: service@repairtw.com
www.repairtw.com

No. (Addr.)	Name	Description	Setting	Page
L8-18 (4BEH)	Software Current Limit Selection	V/f V/f w/PG OLV CLV OLV/PM AOLV/PM CLV/PM 0: Disabled 1: Enabled	Default: 0 Min: 0 Max: 1	272
L8-19 (4BFH)	Frequency Reduction Rate during Overheat Pre-Alarm	All Modes Specifies the frequency reference reduction gain at overheat pre-alarm when L8-03 = 4.	Default: 0.8 Min: 0.1 Max: 0.9	270
L8-27 (4DDH)	Overcurrent Detection Gain	V/f V/f w/PG OLV CLV OLV/PM AOLV/PM CLV/PM Sets the gain for overcurrent detection as a percentage of the motor rated current. Overcurrent is detected using the drive's overcurrent level or the value set to L8-27, whichever is lower.	Default: 300.0% Min: 0.0% Max: 300.0%	272
L8-29 (4DFH)	Current Unbalance Detection (LF2)	V/f V/f w/PG OLV CLV OLV/PM AOLV/PM CLV/PM 0: Disabled 1: Enabled	Default: 1 Min: 0 Max: 1	272
L8-35 (4ECH)	Installation Method Selection	All Modes 0: IP00 enclosure drive 1: Side-by-Side mounting 2: NEMA Type 1 enclosure 3: Finless model drive or external heatsink installation	Default: <3> <9> Min: 0 Max: 3	273
L8-38 (4EFH)	Carrier Frequency Reduction Selection	V/f V/f w/PG OLV CLV OLV/PM AOLV/PM CLV/PM 0: Disabled 1: Enabled below 6 Hz 2: Enabled for the entire speed range	Default: <16> Min: 0 Max: 2	273
L8-40 (4F1H)	Carrier Frequency Reduction Off-Delay Time	V/f V/f w/PG OLV CLV OLV/PM AOLV/PM CLV/PM Sets the time that the drive continues running with reduced carrier frequency after the carrier reduction condition is gone. Setting 0.00 s disables the carrier frequency reduction time.	Default: <10> Min: 0.00 s Max: 2.00 s	273
L8-41 (4F2H)	High Current Alarm Selection	All Modes 0: Disabled 1: Enabled. An alarm is triggered at output currents above 150% of the drives rated current.	Default: 0 Min: 0 Max: 1	273
L8-55 (45FH)	Internal Braking Transistor Protection	All Modes 0: Disabled. L8-55 should be disabled when using a regen converter or an optional braking unit. 1: Protection enabled.	Default: 1 Min: 0 Max: 1	274

上正科技有限公司 購買、維修 此手冊零組件 電話： 037-466333 Email: service@repairtw.com Line Id: @zzzz www.repairtw.com

<3> Parameter setting value is not reset to the default value when the drive is initialized.
<9> Default setting is determined by the drive model (o2-04) and duty selection (C6-01).
<10> Default setting is determined by the control mode (A1-02).
<16> Default setting is determined by the control mode (A1-02) and the drive model (o2-04).

◆ n: Special Adjustment

The n parameters are used to adjust more advanced performance characteristics such as Hunting Prevention, speed feedback detection, High Slip Braking, and Online Tuning for motor line-to-line resistance.

■ n1: Hunting Prevention

No. (Addr.)	Name	Description	Setting	Page
n1: Hunting Prevention				
n1-01 (580H)	Hunting Prevention Selection	V/f V/f w/PG OLV CLV OLV/PM AOLV/PM CLV/PM 0: Disabled 1: Enabled	Default: 1 Min: 0 Max: 1	275
n1-02 (581H)	Hunting Prevention Gain Setting	V/f V/f w/PG OLV CLV OLV/PM AOLV/PM CLV/PM If the motor vibrates while lightly loaded, increase the gain by 0.1 until vibration ceases. If the motor stalls, decrease the gain by 0.1 until the stalling ceases.	Default: 1.00 Min: 0.00 Max: 2.50	275
n1-03 (582H)	Hunting Prevention Time Constant	V/f V/f w/PG OLV CLV OLV/PM AOLV/PM CLV/PM Sets the time constant used for Hunting Prevention.	Default: <6> Min: 0 ms Max: 500 ms	275

No. (Addr.)	Name	Description	Setting	Page
n1-05 (530H)	Hunting Prevention Gain while in Reverse	V/f, V/f w/PG, OLV, CLV, OLV/PM, AOLV/PM, CLV/PM Sets the gain used for Hunting Prevention. If set to 0, the gain set to n1-02 is used for operation in reverse.	Default: 0.00 Min: 0.00 Max: 2.50	275

<6> Default setting value varies by the drive model (o2-04).

■ n2: Speed Feedback Detection Control (AFR) Tuning

No. (Addr.)	Name	Description	Setting	Page
n2-01 (584H)	Speed Feedback Detection Control (AFR) Gain	V/f, V/f w/PG, OLV, CLV, OLV/PM, AOLV/PM, CLV/PM Sets the internal speed feedback detection control gain in the automatic frequency regulator (AFR). If hunting occurs, increase the set value. If response is low, decrease the set value.	Default: 1.00 Min: 0.00 Max: 10.00	276
n2-02 (585H)	Speed Feedback Detection Control (AFR) Time Constant 1	V/f, V/f w/PG, OLV, CLV, OLV/PM, AOLV/PM, CLV/PM Sets the time constant used for speed feedback detection control (AFR).	Default: 50 ms Min: 0 ms Max: 2000 ms	276
n2-03 (586H)	Speed Feedback Detection Control (AFR) Time Constant 2	V/f, V/f w/PG, OLV, CLV, OLV/PM, AOLV/PM, CLV/PM Sets the AFR time constant to be used during Speed Search and during regen.	Default: 750 ms Min: 0 ms Max: 2000 ms	276

■ n3: High Slip Braking (HSB) and Overexcitation Braking

No. (Addr.)	Name	Description	Setting	Page
n3-01 (588H)	High Slip Braking Deceleration Frequency Width	V/f, V/f w/PG, OLV, CLV, OLV/PM, AOLV/PM, CLV/PM Sets the output frequency reduction step width for when the drive stops the motor using HSB. Set as a percentage of the maximum output frequency. Increase this setting if overvoltage occurs during HSB.	Default: 5% Min: 1% Max: 20%	276
n3-02 (589H)	High Slip Braking Current Limit	V/f, V/f w/PG, OLV, CLV, OLV/PM, AOLV/PM, CLV/PM Sets the current limit during HSB as a percentage of the motor rated current.	Default: <35> Min: 100% Max: 200%	277
n3-03 (58AH)	High Slip Braking Dwell Time at Stop	V/f, V/f w/PG, OLV, CLV, OLV/PM, AOLV/PM, CLV/PM Sets the time the drive will run with minimum frequency (E1-09) at the end of deceleration. If this time is set too low, the machine inertia can cause the motor to rotate slightly after HSB.	Default: 1.0 s Min: 0.0 s Max: 10.0 s	277
n3-04 (58BH)	High-Slip Braking Overload Time	V/f, V/f w/PG, OLV, CLV, OLV/PM, AOLV/PM, CLV/PM Sets the time required for an HSB overload fault (oL7) to occur when the drive output frequency does not change during an HSB stop. This parameter does not typically require adjustment.	Default: 40 s Min: 30 s Max: 1200 s	277
n3-13 (531H)	Overexcitation Deceleration Gain	V/f, V/f w/PG, OLV, CLV, OLV/PM, AOLV/PM, CLV/PM Sets the gain applied to the V/f pattern during Overexcitation Deceleration (L3-04 = 4).	Default: 1.10 Min: 1.00 Max: 1.40	278
n3-14 (532H)	High Frequency Injection during Overexcitation Deceleration	V/f, V/f w/PG, OLV, CLV, OLV/PM, AOLV/PM, CLV/PM 0: Disabled 1: Enabled	Default: 0 Min: 0 Max: 1	278
n3-21 (579H)	High-Slip Suppression Current Level	V/f, V/f w/PG, OLV, CLV, OLV/PM, AOLV/PM, CLV/PM Sets output current level at which the drive will start reducing the overexcitation gain in order to prevent a too high motor slip during Overexcitation Deceleration. Set as a percentage of the drive rated current.	Default: 100% Min: 0% Max: 150%	278
n3-23 (57BH)	Overexcitation Operation Selection	V/f, V/f w/PG, OLV, CLV, OLV/PM, AOLV/PM, CLV/PM 0: Enabled in both directions 1: Enabled only when rotating forward 2: Enabled only when in reverse	Default: 0 Min: 0 Max: 2	278

<35> The upper limit of the setting range is determined by the values set to duty selection (C6-01) and the carrier frequency reduction selection (L8-38).

上正科技有限公司
購買、維修 此手冊零組件
電話： 037-466333
Email: service@repairtw.com
Line id: @zzzz
www.repairtw.com

■ n5: Feed Forward Control

No. (Addr.)	Name	Description	Setting	Page
n5-01 (5B0H)	Feed Forward Control Selection	V/f · V/f w/PG · OLV · **CLV** · OLV/PM · **AOLV/PM** · **CLV/PM** 0: Disabled 1: Enabled	Default: 0 Min: 0 Max: 1	*279*
n5-02 (5B1H)	Motor Acceleration Time	V/f · V/f w/PG · OLV · **CLV** · OLV/PM · **AOLV/PM** · **CLV/PM** Sets the time required to accelerate the motor at the rated torque from stop to rated speed.	Default: *<9> <14>* Min: 0.001 s Max: 10.000 s	*279*
n5-03 (5B2H)	Feed Forward Control Gain	V/f · V/f w/PG · OLV · **CLV** · OLV/PM · **AOLV/PM** · **CLV/PM** Sets the ratio between motor and load inertia. Lower this setting if overshoot occurs at the end of acceleration.	Default: 1.00 Min: 0.00 Max: 100.00	*280*

<9> Default setting value is dependent on the drive model (o2-04) and the Drive Duty (C6-01).
<14> Default setting value is dependent on the motor code set to E5-01.

■ n6: Online Tuning

No. (Addr.)	Name	Description	Setting	Page
n6-01 (570H)	Online Tuning Selection	V/f · V/f w/PG · **OLV** · CLV · OLV/PM · AOLV/PM · CLV/PM 0: Disabled 1: Line-to-line resistance tuning 2: Voltage correction. Setting not possible when Energy Saving is enabled (b8-01).	Default: 2 Min: 0 Max: 2	*280*
n6-05 (5C7H)	Online Tuning Gain	V/f · V/f w/PG · **OLV** · CLV · OLV/PM · AOLV/PM · CLV/PM Decrease this setting for motors with a relatively large rotor time constant. If overload occurs, increase this setting slowly in increments of 0.10.	Default: 1.00 Min: 0.10 Max: 5.00	*281*

上正科技有限公司
購買、維修 此手冊零組件
電話： 037-466333
Email: service@repairtw.com
Line id: @zzzz
www.repairtw.com

■ n8: PM Motor Control Tuning

No. (Addr.)	Name	Description	Setting	Page
n8-01 (540H)	Initial Rotor Position Estimation Current	V/f · V/f w/PG · CLV · OLV/PM · **AOLV/PM** · CLV/PM Sets the current used for initial rotor position estimation as a percentage of the motor rated current (E5-03). If the motor nameplate lists an "Si" value, that value should be entered here.	Default: 50% Min: 0% Max: 100%	*281*
n8-02 (541H)	Pole Attraction Current	V/f · V/f w/PG · OLV · CLV · OLV/PM · **AOLV/PM** · CLV/PM Sets the current during initial polar attraction as a percentage of the motor rated current. Enter a high value when attempting to increase starting torque.	Default: 80% Min: 0% Max: 150%	*281*
n8-35 (562H)	Initial Rotor Position Detection Selection	V/f · V/f w/PG · OLV · CLV · OLV/PM · **AOLV/PM** · **CLV/PM** 0: Pull-in 1: High frequency injection 2: Pulse injection	Default: 1 Min: 0 Max: 2	*281*
n8-45 (538H)	Speed Feedback Detection Control Gain	V/f · V/f w/PG · OLV · CLV · **OLV/PM** · AOLV/PM · CLV/PM Increase this setting if hunting occurs. Decrease to lower the response.	Default: 0.80 Min: 0.00 Max: 10.00	*282*
n8-47 (53AH)	Pull-In Current Compensation Time Constant	V/f · V/f w/PG · OLV · CLV · **OLV/PM** · AOLV/PM · CLV/PM Sets the time constant to make the pull-in current reference and actual current value agree. Decrease the value if the motor begins to oscillate, and increase the value if it takes too long for the current reference to equal the output current.	Default: 5.0 s Min: 0.0 s Max: 100.0 s	*282*
n8-48 (53BH)	Pull-In Current	V/f · V/f w/PG · OLV · CLV · **OLV/PM** · AOLV/PM · CLV/PM Defines the d-axis current reference during no-load operation at a constant speed. Set as a percentage of the motor rated current. Increase this setting if hunting occurs while running at constant speed.	Default: 30% Min: 20% Max: 200%	*282*
n8-49 (53CH)	d-Axis Current for High Efficiency Control	V/f · V/f w/PG · OLV · CLV · **OLV/PM** · AOLV/PM · CLV/PM Sets the d-axis current reference when running a high load at constant speed. Set as a percentage of the motor rated current.	Default: *<14>* Min: -200.0% Max: 0.0%	*282*

No. (Addr.)	Name	Description	Setting	Page
n8-51 (53EH)	Acceleration/Deceleration Pull-In Current	V/f V/f w/PG OLV CLV OLV/PM AOLV/PM CLV/PM Sets the d-axis current reference during acceleration/deceleration as a percentage of the motor rated current. Set to a high value when more starting torque is needed.	Default: 50% Min: 0% Max: 200%	282
n8-54 (56DH)	Voltage Error Compensation Time Constant	V/f V/f w/PG OLV CLV OLV/PM AOLV/PM CLV/PM Adjusts the value when hunting occurs at low speed. If hunting occurs with sudden load changes, increase n8-54 in increments of 0.1. Reduce this setting if oscillation occurs at start.	Default: 1.00 s Min: 0.00 s Max: 10.00 s	282
n8-55 (56EH)	Load Inertia	V/f V/f w/PG OLV CLV OLV/PM AOLV/PM CLV/PM For large inertia loads or to increase the speed control response, increase this setting. Too high of a setting when driving a very light load or load with very low inertia can result in oscillation.	Default: 0 Min: 0 Max: 3	283
n8-57 (574H)	High Frequency Injection	V/f V/f w/PG OLV CLV OLV/PM AOLV/PM CLV/PM 0: Disabled. Disable when using an SPM motor. 1: Enabled. Use this setting to enhance the speed control range when using an IPM motor.	Default: 0 Min: 0 Max: 1	283
n8-62 (57DH) <18>	Output Voltage Limit	V/f V/f w/PG OLV CLV OLV/PM AOLV/PM CLV/PM Prevents output voltage saturation. Should be set just below the voltage provided by the input power supply.	Default: 200.0 V Min: 0.0 V Max: 230.0 V	283
n8-65 (65CH)	Speed Feedback Detection Control Gain during ov Suppression	V/f V/f w/PG OLV CLV OLV/PM AOLV/PM CLV/PM Sets the gain used for internal speed feedback detection during ov suppression	Default: 1.50 Min: 0.00 Max: 10.00	283

<14> Default setting value is dependent on the motor code set to E5-01.
<18> Values shown here are for 200 V class drives. Double the value when using a 400 V class drive.

上正科技有限公司
購買、維修 此手冊零組件
電話： 037-466333
Email: service@repairtw.com
Line id: @zzzz
www.repairtw.com

◆ o: Operator Related Settings

The o parameters are used to set up the digital operator displays.

■ o1: Digital Operator Display Selection

No. (Addr.)	Name	Description	Setting	Page
o1-01 (500H) RUN	Drive Mode Unit Monitor Selection	All Modes Selects the content of the last monitor that is shown when scrolling through Drive Mode display. Enter the last three digits of the monitor parameter number to be displayed: U□-□□.	Default: 106 (Monitor U1-06) Min: 104 Max: 809	284
o1-02 (501H) RUN	User Monitor Selection after Power Up	All Modes 1: Frequency reference (U1-01) 2: Direction 3: Output frequency (U1-02) 4: Output current (U1-03) 5: User-selected monitor (set by o1-01)	Default: 1 Min: 1 Max: 5	284
o1-03 (502H)	Digital Operator Display Selection	All Modes Sets the units the drive should use to display the frequency reference and motor speed monitors. 0: 0.01 Hz 1: 0.01% (100% = E1-04) 2: r/min (calculated using the number of motor poles setting in E2-04, E4-04, or E5-04) 3: User-selected units (set by o1-10 and o1-11)	Default: <10> Min: 0 Max: 3	284
o1-04 (503H)	V/f Pattern Display Unit	V/f V/f w/PG OLV CLV OLV/PM AOLV/PM CLV/PM 0: Hz 1: r/min	Default: <10> Min: 0 Max: 1	285
o1-10 (520H)	User-Set Display Units Maximum Value	All Modes These settings define the display values when o1-03 is set to 3. o1-10 sets the display value that is equal to the maximum output frequency. o1-11 sets the position of the decimal position.	Default: <36> Min: 1 Max: 60000	285
o1-11 (521H)	User-Set Display Units Decimal Display		Default: <36> Min: 0 Max: 3	285

<10> Default setting is determined by the control mode (A1-02).
<36> Default setting value is determined by the digital operator display selection (o1-03).

■ o2: Digital Operator Keypad Functions

No. (Addr.)	Name	Description	Setting	Page
o2-01 (505H)	LO/RE Key Function Selection	All Modes 0: Disabled 1: Enabled. LO/RE key switches between LOCAL and REMOTE operation.	Default: 1 Min: 0 Max: 1	285
o2-02 (506H)	STOP Key Function Selection	All Modes 0: Disabled. STOP key is disabled in REMOTE operation. 1: Enabled. STOP key is always enabled.	Default: 1 Min: 0 Max: 1	286
o2-03 (507H)	User Parameter Default Value	All Modes 0: No change. 1: Set defaults. Saves parameter settings as default values for a User Initialization. 2: Clear all. Clears the default settings that have been saved for a User Initialization.	Default: 0 Min: 0 Max: 2	286
o2-04 (508H)	Drive Model Selection	All Modes Enter the drive model. Setting required only if installing a new control board.	Default: Determined by drive capacity Min: – Max: –	286
o2-05 (509H)	Frequency Reference Setting Method Selection	All Modes 0: ENTER key must be pressed to enter a frequency reference. 1: ENTER key is not required. The frequency reference can be adjusted using the up and down arrow keys only.	Default: 0 Min: 0 Max: 1	286
o2-06 (50AH)	Operation Selection when Digital Operator is Disconnected	All Modes 0: The drive continues operating if the digital operator is disconnected. 1: A fault is triggered (oPr) and the motor coasts to stop.	Default: 0 Min: 0 Max: 1	287
o2-07 (527H)	Motor Direction at Power Up when Using Operator	All Modes 0: Forward 1: Reverse This parameter requires that drive operation be assigned to the digital operator.	Default: 0 Min: 0 Max: 1	287
o2-09 (50DH)	Reserved	–	–	–

上正科技有限公司
購買、維修 此手冊零組件
電話： 037-466333
Email: service@repairtw.com
Line id: @zzzz
www.repairtw.com

■ o3: Copy Function

No. (Addr.)	Name	Description	Setting	Page
o3-01 (515H)	Copy Function Selection	All Modes 0: No action 1: Read parameters from the drive, saving them onto the digital operator. 2: Copy parameters from the digital operator, writing them to the drive. 3: Verify parameter settings on the drive to check if they match the data saved on the operator.	Default: 0 Min: 0 Max: 3	287
o3-02 (516H)	Copy Allowed Selection	All Modes 0: Read operation prohibited 1: Read operation allowed	Default: 0 Min: 0 Max: 1	287

■ o4: Maintenance Monitor Settings

No. (Addr.)	Name	Description	Setting	Page
o4-01 (50BH)	Cumulative Operation Time Setting	All Modes Sets the value for the cumulative operation time of the drive in units of 10 h.	Default: 0 h Min: 0 h Max: 9999 h	288
o4-02 (50CH)	Cumulative Operation Time Selection	All Modes 0: Logs power-on time 1: Logs operation time when the drive output is active (output operation time).	Default: 0 Min: 0 Max: 1	288
o4-03 (50EH)	Cooling Fan Operation Time Setting	All Modes Sets the value of the fan operation time monitor U4-03 in units of 10 h.	Default: 0 h Min: 0 h Max: 9999 h	288
o4-05 (51DH)	Capacitor Maintenance Setting	All Modes Sets the value of the Maintenance Monitor for the capacitors. See U4-05 to check when the capacitors may need to be replaced.	Default: 0% Min: 0% Max: 150%	288
o4-07 (523H)	DC Bus Pre-Charge Relay Maintenance Setting	All Modes Sets the value of the Maintenance Monitor for the soft charge bypass relay. See U4-06 to check when the bypass relay may need to be replaced.	Default: 0% Min: 0% Max: 150%	288
o4-09 (525H)	IGBT Maintenance Setting	All Modes Sets the value of the Maintenance Monitor for the IGBTs. See U4-07 to check when the IGBTs may need to be replaced.	Default: 0% Min: 0% Max: 150%	289
o4-11 (510H)	U2, U3 Initialization	All Modes 0: U2-□□ and U3-□□ monitor data is not reset when the drive is initialized (A1-03). 1: U2-□□ and U3-□□ monitor data is reset when the drive is initialized (A1-03).	Default: 0 Min: 0 Max: 1	289

No. (Addr.)	Name	Description	Setting	Page
o4-12 (512H)	kWh Monitor Initialization	All Modes 0: U4-10 and U4-11 monitor data is not reset when the drive is initialized (A1-03). 1: U4-10 and U4-11 monitor data is reset when the drive is initialized (A1-03).	Default: 0 Min: 0 Max: 1	289
o4-13 (528H)	Number of Run Commands Counter Initialization	All Modes 0: Number of Run commands counter is not reset when the drive is initialized (A1-03). 1: Number of Run commands counter is reset when the drive is initialized (A1-03).	Default: 0 Min: 0 Max: 1	289

◆ q: DriveWorksEZ Parameters

No. (Addr.)	Name	Description	Setting	Page
q1-01 to q6-07 (1600H to 1746H)	DriveWorksEZ Parameters	All Modes Reserved for DriveWorksEZ	Refer to Help in the DWEZ software.	289

◆ r: DriveWorksEZ Connection Parameters

No. (Addr.)	Name	Description	Setting	Page
r1-01 to r1-40 (1840H to 1867H)	DriveWorksEZ Connection Parameters 1 to 20 (upper/lower)	All Modes DriveWorksEZ Connection Parameters 1 to 20 (upper/lower)	Default: 0 Min: 0 Max: FFFFH	289

◆ T: Motor Tuning

Enter data into the following parameters to tune the motor and drive for optimal performance

■ T1: Induction Motor Auto-Tuning

上正科技有限公司
購買、維修 此主機零組件
電話：037-466333
Email: service@repairtw.com
line id: @zzzz
www.repairtw.com

No. (Addr.)	Name	Description	Setting	Page
T1-00 (700H)	Motor 1 / Motor 2 Selection	V/f V/f w/PG OLV CLV OLV/PM AOLV/PM CLV/PM 1: Motor 1 (sets E1-□□, E2-□□) 2: Motor 2 (sets E3-□□, E4-□□)	Default: 1 Min: 1 Max: 2	114
T1-01 (701H) <37>	Auto-Tuning Mode Selection	V/f V/f w/PG OLV CLV OLV/PM AOLV/PM CLV/PM 0: Rotational Auto-Tuning 1: Stationary Auto-Tuning 1 2: Stationary Auto-Tuning for Line-to-Line Resistance 3: Rotational Auto-Tuning for V/f Control (necessary for Energy Savings and Speed Estimation Speed Search) 4: Stationary Auto-Tuning 2 8: Inertia Tuning (perform Rotational Auto-Tuning prior to Inertia Tuning) 9: ASR Gain Tuning (perform Rotational Auto-Tuning prior to ASR Gain Auto-Tuning)	Default: 0 Min: 0 Max: 4, 8, 9 <10>	114
T1-02 (702H)	Motor Rated Power	V/f V/f w/PG OLV CLV OLV/PM AOLV/PM CLV/PM Sets the motor rated power as specified on the motor nameplate. **Note:** Use the following formula to convert horsepower into kilowatts: kW = HP x 0.746.	Default: <6> Min: 0.00 kW Max: 650.00 kW	115
T1-03 (703H) <18>	Motor Rated Voltage	V/f V/f w/PG OLV CLV OLV/PM AOLV/PM CLV/PM Sets the motor rated voltage as specified on the motor nameplate.	Default: 200.0 V Min: 0.0 V Max: 255.0 V	115
T1-04 (704H)	Motor Rated Current	V/f V/f w/PG OLV CLV OLV/PM AOLV/PM CLV/PM Sets the motor rated current as specified on the motor nameplate.	Default: <6> Min: 10% of drive rated current Max: 200% of drive rated current	115
T1-05 (705H)	Motor Base Frequency	V/f V/f w/PG OLV CLV OLV/PM AOLV/PM CLV/PM Sets the rated frequency of the motor as specified on the motor nameplate.	Default: 50.0 Hz Min: 0.0 Hz Max: 400.0 Hz	115
T1-06 (706H)	Number of Motor Poles	V/f V/f w/PG OLV CLV OLV/PM AOLV/PM CLV/PM Sets the number of motor poles as specified on the motor nameplate.	Default: 4 Min: 2 Max: 48	115
T1-07 (707H)	Motor Base Speed	V/f V/f w/PG OLV CLV OLV/PM AOLV/PM CLV/PM Sets the rated speed of the motor as specified on the motor nameplate.	Default: 1450 r/min Min: 0 r/min Max: 24000 r/min	115

No. (Addr.)	Name	Description	Setting	Page
T1-08 (708H)	PG Number of Pulses Per Revolution	V/f V/f w/PG OLV **CLV** OLV/PM AOLV/PM CLV/PM Set the number of pulses per revolution for the PG being used (pulse generator or encoder).	Default: 1024 ppr Min: 0 ppr Max: 60000 ppr	*116*
T1-09 (709H)	Motor No-Load Current (Stationary Auto-Tuning)	V/f V/f w/PG **OLV** **CLV** OLV/PM AOLV/PM CLV/PM Sets the no-load current for the motor. After setting the motor capacity to T1-02 and the motor rated current to T1-04, this parameter will automatically display the no-load current for a standard 4 pole Yaskawa motor. Enter the no-load current as indicated on the motor test report.	Default: – Min: 0 A Max: T1-04	*116*
T1-10 (70AH)	Motor Rated Slip (Stationary Auto-Tuning)	V/f V/f w/PG **OLV** **CLV** OLV/PM AOLV/PM CLV/PM Sets the motor rated slip. After setting the motor capacity to T1-02, this parameter will automatically display the motor slip for a standard 4 pole Yaskawa motor. Enter the motor slip as indicated on the motor test report.	Default: – Min: 0.00 Hz Max: 20.00 Hz	*116*
T1-11 (70BH)	Motor Iron Loss	**V/f** **V/f w/PG** OLV CLV OLV/PM AOLV/PM CLV/PM Sets the iron loss for determining the Energy Saving coefficient. The value is set to E2-10 (motor iron loss) set when the power is cycled. If T1-02 is changed, a default value appropriate for the motor capacity that was entered will appear.	Default: 14 W *<38>* Min: 0 W Max: 65535 W	*116*

<6> Default setting value varies by the drive model (o2-04).
<10> Default setting is determined by the control mode (A1-02).
<18> Values shown here are for 200 V class drives. Double the value when using a 400 V class drive.
<37> The availability of certain Auto-Tuning methods depends on the control mode selected for the drive.
<38> Default setting value differs depending on the motor code value and motor parameter settings.

■ T2: PM Motor Auto-Tuning

No. (Addr.)	Name	Description	Setting	Page
T2-01 (750H)	PM Motor Auto-Tuning Mode Selection	V/f V/f w/PG OLV CLV **OLV/PM** **AOLV/PM** **CLV/PM** 0: PM Motor Parameter Settings 1: PM Stationary Auto-Tuning 2: PM Stationary Auto-Tuning for Stator Resistance 3: Z Pulse Offset Tuning 8: Inertia Tuning 9: ASR Gain Auto-Tuning Prior to executing Inertia Tuning or ASR Gain Auto-Tuning, be sure to take the following steps: • perform Auto-Tuning for motor data (T2-01 = 0, 1, or 2) or set the motor code to E5-01. • verify all motor data entered to the drive with the motor nameplate or the motor test report.	Default: 0 Min: 0 Max: 3, 8, 9 *<10>*	*116*
T2-02 (751H)	PM Motor Code Selection	V/f V/f w/PG OLV CLV **OLV/PM** **AOLV/PM** **CLV/PM** Enter the motor code when using a Yaskawa PM motor. Once the motor code is entered, the drive automatically sets parameters T2-03 through T2-14. When using a motor that is not supported motor code or a non-Yaskawa motor, set FFFF here and then adjust the other T2 parameters according the motor nameplate or the motor test report.	Default: *<16>* Min: 0000 Max: FFFF	*117*
T2-03 (752H)	PM Motor Type	V/f V/f w/PG OLV CLV **OLV/PM** **AOLV/PM** **CLV/PM** 0: IPM motor 1: SPM motor. Parameter T2-17 will not be displayed with this setting.	Default: 1 Min: 0 Max: 1	*117*
T2-04 (730H)	PM Motor Rated Power	V/f V/f w/PG OLV CLV **OLV/PM** **AOLV/PM** **CLV/PM** Sets the motor rated power. **Note:** Use the following formula to convert horsepower into kilowatts: kW = HP x 0.746.	Default: *<6>* Min: 0.00 kW Max: 650.00 kW	*117*
T2-05 (732H) *<18>*	PM Motor Rated Voltage	V/f V/f w/PG OLV CLV **OLV/PM** **AOLV/PM** **CLV/PM** Enter the motor rated voltage as indicated on the motor nameplate.	Default: 200.0 V Min: 0.0 V Max: 255.0 V	*117*
T2-06 (733H)	PM Motor Rated Current	V/f V/f w/PG OLV CLV **OLV/PM** **AOLV/PM** **CLV/PM** Enter the motor rated current as indicated on the motor nameplate.	Default: *<6>* Min: 10% of drive rated current Max: 200% of drive rated current	*117*
T2-07 (753H)	PM Motor Base Frequency	V/f V/f w/PG OLV CLV **OLV/PM** **AOLV/PM** **CLV/PM** Enter the motor base frequency as indicated on the motor nameplate.	Default: 87.5 Hz Min: 0.0 Hz Max: 400.0 Hz	*117*

上正科技有限公司
購買、維修此手冊零組件
電話：037-466333
Email: service@repairtw.com
www.repairtw.com

No. (Addr.)	Name	Description	Setting	Page
T2-08 (734H)	Number of PM Motor Poles	V/f V/f w/PG OLV CLV OLV/PM AOLV/PM CLV/PM Enter the number of motor poles for the PM motor as indicated on the motor nameplate.	Default: 6 Min: 2 Max: 48	118
T2-09 (731H)	PM Motor Base Speed	V/f V/f w/PG OLV CLV OLV/PM AOLV/PM CLV/PM Enter the base speed for the PM motor as indicated on the motor nameplate.	Default: 1750 r/min Min: 0 r/min Max: 24000 r/min	118
T2-10 (754H)	PM Motor Stator Resistance	V/f V/f w/PG OLV CLV OLV/PM AOLV/PM CLV/PM Enter the rotor resistance for the PM motor as indicated on the motor nameplate.	Default: <39> Min: 0.000 Ω Max: 65.000 Ω	118
T2-11 (735H)	PM Motor d-Axis Inductance	V/f V/f w/PG OLV CLV OLV/PM AOLV/PM CLV/PM Enter the d-axis inductance for the PM motor as indicated on the motor nameplate.	Default: <39> Min: 0.00 mH Max: 600.00 mH	118
T2-12 (736H)	PM Motor q-Axis Inductance	V/f V/f w/PG OLV CLV OLV/PM AOLV/PM CLV/PM Enter the q-axis inductance for the PM motor as indicated on the motor nameplate.	Default: <39> Min: 0.00 mH Max: 600.00 mH	118
T2-13 (755H)	Induced Voltage Constant Unit Selection	V/f V/f w/PG OLV CLV OLV/PM AOLV/PM CLV/PM 0: mV/(r/min). E5-09 will automatically be set to 0.0, and E5-24 will be used. 1: mV/(rad/sec). E5-24 will automatically be set to 0.0, and E5-09 will be used	Default: 1 Min: 0 Max: 1	118
T2-14 (737H)	PM Motor Induced Voltage Constant	V/f V/f w/PG OLV CLV OLV/PM AOLV/PM CLV/PM Enter the induced voltage coefficient for the PM motor as indicated on the motor nameplate.	Default: <39> Min: 0.1 Max: 2000.0	118
T2-15 (756H)	Pull-In Current Level for PM Motor Tuning	V/f V/f w/PG OLV CLV OLV/PM AOLV/PM CLV/PM Sets the amount of pull-in current to use for Auto-Tuning as a percentage of the motor rated current. Increase this setting for high inertia loads.	Default: 30% Min: 0% Max: 120%	118
T2-16 (738H)	PG Number of Pulses Per Revolution for PM Motor Tuning	V/f V/f w/PG OLV CLV OLV/PM AOLV/PM CLV/PM Sets the number of pulses per revolution for the PG being used (pulse generator or encoder).	Default: 1024 ppr Min: 1 ppr Max: 15000 ppr	119
T2-17 (757H)	Encoder Z-Pulse Offset	V/f V/f w/PG OLV CLV OLV/PM AOLV/PM CLV/PM Sets the offset between encoder offset and the rotor magnetic axis.	Default: 0.0 deg Min: -180.0 deg Max: 180.0 deg	119

上誼科技有限公司 購買、維修 此手冊零組件 電話： 037-466233 Email: service@repairtw.com Line id: @zzzz www.repairtw.com

<6> Default setting value varies by the drive model (o2-04).
<10> Default setting is determined by the control mode (A1-02).
<16> Default setting is determined by the control mode (A1-02) and the drive model (o2-04).
<18> Values shown here are for 200 V class drives. Double the value when using a 400 V class drive.
<39> Default setting is determined by the drive capacity and the motor code selected in T2-02.

■ T3: ASR and Inertia Tuning

No. (Addr.)	Name	Description	Setting	Page
T3-01 (760H) <40>	Test Signal Frequency	V/f V/f w/PG OLV CLV OLV/PM AOLV/PM CLV/PM Sets the frequency of the test signal used during Inertia Tuning and ASR Gain Auto-Tuning. Reduce this value if the inertia is large or if a fault occurs.	Default: 3.0 Hz Min: 0.1 Hz Max: 20.0 Hz	119
T3-02 (761H) <40>	Test Signal Amplitude	V/f V/f w/PG OLV CLV OLV/PM AOLV/PM CLV/PM Sets the amplitude of the test signal used during Inertia and ASR Gain Auto-Tuning. Reduce this value if the inertia is too large or if a fault occurs.	Default: 0.5 rad Min: 0.1 rad Max: 10.0 rad	119
T3-03 (762H) <40>	Motor Inertia	V/f V/f w/PG OLV CLV OLV/PM AOLV/PM CLV/PM Sets the motor inertia. Default setting is the inertia of a Yaskawa motor.	Default: <9> <14> Min: 0.0001 kgm^2 Max: 600.00 kgm^2	119
T3-04 (763H) <40>	System Response Frequency	V/f V/f w/PG OLV CLV OLV/PM AOLV/PM CLV/PM Sets the response frequency of the mechanical system connected to the motor. Oscillation may result if set too high.	Default: 10.0 Hz Min: 0.1 Hz Max: 50.0 Hz	120

<9> Default setting value is dependent on the drive model (o2-04) and the Drive Duty (C6-01).
<14> Default setting value is dependent on the motor code set to E5-01.
<40> Displayed only when performing Inertia Tuning or ASR Gain Auto-Tuning (T1-01 = 9 or T2-01 = 9).

◆ U: Monitors

Monitor parameters allow the user to view drive status, fault information, and other data concerning drive operation.

■ U1: Operation Status Monitors

No. (Addr.)	Name	Description	Analog Output Level	Unit	Page
U1-01 (40H)	Frequency Reference	All Modes Monitors the frequency reference. Display units are determined by o1-03.	10 V: Max frequency	0.01 Hz	–
U1-02 (41H)	Output Frequency	All Modes Displays the output frequency. Display units are determined by o1-03.	10 V: Max frequency	0.01 Hz	–
U1-03 (42H)	Output Current	All Modes Displays the output current.	10 V: Drive rated current	<19> <50>	–
U1-04 (43H)	Control Method	All Modes 0: V/f Control 1: V/f Control with PG 2: Open Loop Vector Control 3: Closed Loop Vector Control 5: Open Loop Vector Control for PM 6: Advanced Open Loop Vector Control for PM 7: Closed Loop Vector Control for PM	No signal output available	–	–
U1-05 (44H)	Motor Speed	V/f, V/f w/PG, OLV, CLV, OLV/PM, AOLV/PM, CLV/PM Displays the motor speed feedback. Display units are determined by o1-03.	10 V: Max Frequency	0.01 Hz	–
U1-06 (45H)	Output Voltage Reference	All Modes Displays the output voltage.	10 V: 200 Vrms <18>	0.1 Vac	–
U1-07 (46H)	DC Bus Voltage	All Modes Displays the DC bus voltage.	10 V: 400 V <18>	1 Vdc	–
U1-08 (47H)	Output Power	All Modes Displays the output power (this value is calculated internally).	10 V: Drive rated power (kW)	<22>	–
U1-09 (48H)	Torque Reference	V/f, V/f w/PG, OLV, CLV, OLV/PM, AOLV/PM, CLV/PM Monitors the internal torque reference.	10 V: Motor rated torque	0.1%	–
U1-10 (49H)	Input Terminal Status	All Modes Displays the input terminal status. U1-10=00000000 1 Digital input 1 (terminal S1 enabled) 1 Digital input 2 (terminal S2 enabled) 1 Digital input 3 (terminal S3 enabled) 1 Digital input 4 (terminal S4 enabled) 1 Digital input 5 (terminal S5 enabled) 1 Digital input 6 (terminal S6 enabled) 1 Digital input 7 (terminal S7 enabled) 1 Digital input 8 (terminal S8 enabled)	No signal output available	–	–

上正科技有限公司
購買、維修 此手冊零組件
電話： 037-466333
Email: service@repairtw.com
Line id: @zzzz
www.repairtw.com

No. (Addr.)	Name	Description	Analog Output Level	Unit	Page
U1-11 (4AH)	Output Terminal Status	All Modes Displays the output terminal status. U1-11=00000000 1 Multi-Function Digital Output (terminal M1-M2) 1 Multi-Function Digital Output (terminal M3-M4) 1 Multi-Function Digital Output (terminal M5-M6) Not Used 1 Fault Relay (terminal MA-MC closed MA-MC open)	No signal output available	–	–
U1-12 (4BH)	Drive Status	All Modes Verifies the drive operation status. U1-12=00000000 1 During run 1 During zero-speed 1 During REV 1 During fault reset signal input 1 During speed agree 1 Drive ready 1 During alarm detection 1 During fault detection	No signal output available	–	–
U1-13 (4EH)	Terminal A1 Input Level	All Modes Displays the signal level to analog input terminal A1.	10 V: 100%	0.1%	–
U1-14 (4FH)	Terminal A2 Input Level	All Modes Displays the signal level to analog input terminal A2.	10 V: 100%	0.1%	–
U1-15 (50H)	Terminal A3 Input Level	All Modes Displays the signal level to analog input terminal A3.	10 V: 100%	0.1%	–
U1-16 (53H)	Output Frequency after Soft Starter	All Modes Displays output frequency with ramp time and S-curves. Units determined by o1-03.	10 V: Max frequency	0.01 Hz	–
U1-17 (58H)	DI-A3 Input Status	All Modes Displays the reference value input from the DI-A3 option card. Display will appear in hexadecimal as determined by the digital card input selection in F3-01. 3FFFF: Set (1 bit) + sign (1 bit) + 16 bit	No signal output available	–	–
U1-18 (61H)	oPE Fault Parameter	All Modes Displays the parameter number that caused the oPE□□ or Err (EEPROM write error) error.	No signal output available	–	–
U1-19 (66H)	MEMOBUS/Modbus Error Code	All Modes Displays the contents of a MEMOBUS/Modbus error. U1-19=00000000 1 CRC Error 1 Data Length Error 0 Not Used 1 Parity Error 1 Overrun Error 1 Framing Error 1 Timed Out 0 Not Used	No signal output available	–	–
U1-21 (77H)	AI-A3 Terminal V1 Input Voltage Monitor	All Modes Displays the input voltage to terminal V1 on analog input card AI-A3.	10 V: 100%	0.1%	–
U1-22 (72AH)	AI-A3 Terminal V2 Input Voltage Monitor	All Modes Displays the input voltage to terminal V2 on analog input card AI-A3.	10 V: 100%	0.1%	–
U1-23 (72BH)	AI-A3 Terminal V3 Input Voltage Monitor	All Modes Displays the input voltage to terminal V3 on analog input card AI-A3.	10 V: 100%	0.1%	–

上正科技有限公司
購買、維修 此手冊零組件
電話： 037-466333
Email: service@repairtw.com
Line id: @zzzz
www.repairtw.com

No. (Addr.)	Name	Description	Analog Output Level	Unit	Page
U1-24 (7DH)	Input Pulse Monitor	All Modes Displays the frequency to pulse train input terminal RP.	Determined by H6-02	1 Hz	–
U1-25 (4DH)	Software Number (Flash)	All Modes FLASH ID	No signal output available	–	–
U1-26 (5BH)	Software No. (ROM)	All Modes ROM ID	No signal output available	–	–

<18> Values shown here are for 200 V class drives. Double the value when using a 400 V class drive.
<19> This value's number of decimal places depends on the drive model and the Heavy/Normal duty selection in parameter C6-01. The value will have two decimal places (0.01 A) if the drive is set for a Maximum Applicable Motor Capacity up to 11 kW (refer to *Table A.2* and *Table A.3*) and one decimal place (0.1 A) if the set Maximum Applicable Motor Capacity is higher than 11 kW.
<22> The display resolution depends on the rated output power of the drive after the Drive Duty has been set in parameter C6-01. Drives with a maximum output up to 11 kW will display this value in units of 0.01 kW (two decimal places). Drives with a maximum output greater than 11 kW will display this value in units of 0.1 kW (one decimal place). *Refer to Model Number and Nameplate Check on page 29* for details.
<50> When reading the value of this monitor via MEMOBUS/Modbus a value of 8192 is equal to 100% of the drive rated output current.

■ U2: Fault Trace

No. (Addr.)	Name	Description	Analog Output Level	Unit	Page
U2-01 (80H)	Current Fault	All Modes Displays the current fault.	No signal output available	–	–
U2-02 (81H)	Previous Fault	All Modes Displays the previous fault.	No signal output available	–	–
U2-03 (82H)	Frequency Reference at Previous Fault	All Modes Displays the frequency reference at the previous fault.	No signal output available	0.01 Hz	–
U2-04 (83H)	Output Frequency at Previous Fault	All Modes Displays the output frequency at the previous fault.	No signal output available	0.01 Hz	–
U2-05 (84H)	Output Current at Previous Fault	All Modes Displays the output current at the previous fault.	No signal output available	<19> <50>	–
U2-06 (85H)	Motor Speed at Previous Fault	V/f V/f w/PG OLV CLV OLV/PM AOLV/PM CLV/PM Displays the motor speed at the previous fault.	No signal output available	0.01 Hz	–
U2-07 (86H)	Output Voltage at Previous Fault	All Modes Displays the output voltage at the previous fault.	No signal output available	0.1 Vac	–
U2-08 (87H)	DC Bus Voltage at Previous Fault	All Modes Displays the DC bus voltage at the previous fault.	No signal output available	1 Vdc	–
U2-09 (88H)	Output Power at Previous Fault	All Modes Displays the output power at the previous fault.	No signal output available	0.1 kW	–
U2-10 (89H)	Torque Reference at Previous Fault	V/f V/f w/PG OLV CLV OLV/PM AOLV/PM CLV/PM Displays the torque reference at the previous fault.	No signal output available	0.1%	–
U2-11 (8AH)	Input Terminal Status at Previous Fault	All Modes Displays the input terminal status at the previous fault. Displayed as in U1-10.	No signal output available	–	–
U2-12 (8BH)	Output Terminal Status at Previous Fault	All Modes Displays the output status at the previous fault. Displays the same status displayed in U1-11.	No signal output available	–	–
U2-13 (8CH)	Drive Operation Status at Previous Fault	All Modes Displays the operation status of the drive at the previous fault. Displays the same status displayed in U1-12.	No signal output available	–	–
U2-14 (8DH)	Cumulative Operation Time at Previous Fault	All Modes Displays the cumulative operation time at the previous fault.	No signal output available	1 h	–
U2-15 (7E0H)	Soft Starter Speed Reference at Previous Fault	All Modes Displays the speed reference for the soft starter at the previous fault.	No signal output available	0.01 Hz	–
U2-16 (7E1H)	Motor q-Axis Current at Previous Fault	V/f V/f w/PG OLV CLV OLV/PM AOLV/PM CLV/PM Displays the q-axis current for the motor at the previous fault.	No signal output available	0.10%	–
U2-17 (7E2H)	Motor d-Axis Current at Previous Fault	V/f V/f w/PG OLV CLV OLV/PM AOLV/PM CLV/PM Displays the d-axis current for the motor at the previous fault.	No signal output available	0.10%	–

上正科技有限公司
購買、維修 此手冊零組件
電話：037-466333
Email: service@repairtw.com
line id: @zzzz
www.repairtw.com

No. (Addr.)	Name	Description	Analog Output Level	Unit	Page
U2-19 (7ECH)	Rotor Deviation at Previous Fault	V/f V/f w/PG OLV CLV OLV/PM AOLV/PM CLV/PM Displays the degree of rotor deviation when the most recent fault occurred (same status will appear as shown in U6-10).	No signal output available	0.1 deg	–
U2-20 (8EH)	Heatsink Temperature at Previous Fault	All Modes Displays the temperature of the heatsink when the most recent fault occurred.	No signal output available	1°C	–

<19> This value's number of decimal places depends on the drive model and the Heavy/Normal duty selection in parameter C6-01. The value will have two decimal places (0.01 A) if the drive is set for a Maximum Applicable Motor Capacity up to 11 kW (refer to *Table A.2* and *Table A.3*) and one decimal place (0.1 A) if the set Maximum Applicable Motor Capacity is higher than 11 kW.
<50> When reading the value of this monitor via MEMOBUS/Modbus a value of 8192 is equal to 100% of the drive rated output current.

■ U3: Fault History

No. (Addr.)	Name	Description	Analog Output Level	Unit	Page
U3-01 to U3-04 (90H to 93H (800H to 803H))	First to 4th Most Recent Fault	All Modes Displays the first to the fourth most recent faults.	No signal output available	–	–
U3-05 to U3-10 (804H to 809H)	5th to 10th Most Recent Fault	All Modes Displays the fifth to the tenth most recent faults. After ten faults have occurred in the drive, data for the oldest fault is deleted. The most recent fault appears in U3-01, with the next most recent fault appearing in U3-02. The data is moved to the next monitor parameter every time a fault occurs.	No signal output available	–	–
U3-11 to U3-14 (94H to 97H (80AH to 80DH))	Cumulative Operation Time at 1st to 4th Most Recent Fault	All Modes Displays the cumulative operation time when the first to the fourth most recent faults occurred.	No signal output available	1 h	–
U3-15 to U3-20 (80EH to 813H)	Cumulative Operation Time at 5th to 10th Most Recent Fault	All Modes Displays the cumulative operation time when the fifth to the tenth most recent faults occurred.	No signal output available	1 h	–

上正科技有限公司
購買、維修 此手冊零組件
電話： 037-466333
Email: service@repairtw.com
Line Id: @zzzz
www.repairtw.com

■ U4: Maintenance Monitors

No. (Addr.)	Name	Description	Analog Output Level	Unit	Page
U4-01 (4CH)	Cumulative Operation Time	All Modes Displays the cumulative operation time of the drive. The value for the cumulative operation time counter can be reset in parameter o4-01. Use parameter o4-02 to determine if the operation time should start as soon as the power is switched on or only while the Run command is present. The maximum number displayed is 99999, after which the value is reset to 0.	No signal output available	1 h	–
U4-02 (75H)	Number of Run Commands	All Modes Displays the number of times the Run command is entered. Reset the number of Run commands using parameter o4-13. This value will reset to 0 and start counting again after reaching 65535.	No signal output available	1 Time	–
U4-03 (67H)	Cooling Fan Operation Time	All Modes Displays the cumulative operation time of the cooling fan. The default value for the fan operation time is reset in parameter o4-03. This value will reset to 0 and start counting again after reaching 99999.	No signal output available	1 h	–
U4-04 (7EH)	Cooling Fan Maintenance	All Modes Displays main cooling fan usage time in as a percentage of its expected performance life. Parameter o4-03 can be used to reset this monitor.	No signal output available	1%	–
U4-05 (7CH)	Capacitor Maintenance	All Modes Displays main circuit capacitor usage time in as a percentage of their expected performance life. Parameter o4-05 can be used to reset this monitor.	No signal output available	1%	–
U4-06 (7D6H)	Soft Charge Bypass Relay Maintenance	All Modes Displays the soft charge bypass relay maintenance time as a percentage of its estimated performance life. Parameter o4-07 can be used to reset this monitor.	No signal output available	1%	–
U4-07 (7D7H)	IGBT Maintenance	All Modes Displays IGBT usage time as a percentage of the expected performance life. Parameter o4-09 can be used to reset this monitor.	No signal output available	1%	–
U4-08 (68H)	Heatsink Temperature	All Modes Displays the heatsink temperature.	10 V: 100°C	1°C	–
U4-09 (5EH)	LED Check	All Modes Lights all segments of the LED to verify that the display is working properly.	No signal output available	–	–

No. (Addr.)	Name	Description	Analog Output Level	Unit	Page
U4-10 (5CH)	kWh, Lower 4 Digits	All Modes Monitors the drive output power. The value is shown as a 9 digit number displayed across two monitor parameters, U4-10 and U4-11. Example: 12345678.9 kWh is displayed as: U4-10: 678.9 kWh U4-11: 12345 MWh	No signal output available	1 kWh	–
U4-11 (5DH)	kWh, Upper 5 Digits		No signal output available	1 MWh	–
U4-13 (7CFH)	Peak Hold Current	All Modes Displays the highest current value that occurred during run.	No signal output available	0.01 A <50>	–
U4-14 (7D0H)	Peak Hold Output Frequency	All Modes Displays the output frequency when the current value shown in U4-13 occurred.	No signal output available	0.01 Hz	–
U4-16 (7D8H)	Motor Overload Estimate (oL1)	All Modes Shows the value of the motor overload detection accumulator. 100% is equal to the oL1 detection level.	10 V: 100%	0.1%	–
U4-18 (7DAH)	Frequency Reference Source Selection	All Modes Displays the source for the frequency reference as XY-nn. X: indicates which reference is used: 1 = Reference 1 (b1-01) 2 = Reference 2 (b1-15) Y-nn: indicates the reference source 0-01 = Digital operator 1-01 = Analog (terminal A1) 1-02 = Analog (terminal A2) 1-03 = Analog (terminal A3) 2-02 to 17 = Multi-step speed (d1-02 to 17) 3-01 = MEMOBUS/Modbus communications 4-01 = Communication option card 5-01 = Pulse input 7-01 = DWEZ	No signal output available	–	–
U4-19 (7DBH)	Frequency Reference from MEMOBUS/Modbus Comm.	All Modes Displays the frequency reference provided by MEMOBUS/Modbus (decimal).	No signal output available	0.01%	–
U4-20 (7DCH)	Option Frequency Reference	All Modes Displays the frequency reference input by an option card (decimal).	No signal output available	–	–
U4-21 (7DDH)	Run Command Source Selection	All Modes Displays the source for the Run command as XY-nn. X: Indicates which Run source is used: 1 = Reference 1 (b1-02) 2 = Reference 2 (b1-16) Y: Input power supply data 0 = Digital operator 1 = External terminals 3 = MEMOBUS/Modbus communications 4 = Communication option card 7 = DWEZ nn: Run command limit status data 00: No limit status. 01: Run command was left on when stopped in the PRG mode 02: Run command was left on when switching from LOCAL to REMOTE operation 03: Waiting for soft charge bypass contactor after power up (Uv or Uv1 flashes after 10 s) 04: Waiting for “Run command prohibited” time period to end 05: Fast Stop (digital input, digital operator) 06: b1-17 (Run command given at power-up) 07: During baseblock while coast to stop with timer 08: Frequency reference is below minimal reference during baseblock 09: Waiting for Enter command	No signal output available	–	–
U4-22 (7DEH)	MEMOBUS/Modbus Communications Reference	All Modes Displays the drive control data set by MEMOBUS/Modbus communications register no. 0001H as a four-digit hexadecimal number.	No signal output available	–	–
U4-23 (7DFH)	Communication Option Card Reference	All Modes Displays drive control data set by an option card as a four-digit hexadecimal number.	No signal output available	–	–

<50> When reading the value of this monitor via MEMOBUS/Modbus a value of 8192 is equal to 100% of the drive rated output current.

■ U5: PID Monitors

No. (Addr.)	Name	Description	Analog Output Level	Unit	Page
U5-01 (57H)	PID Feedback	All Modes Displays the PID feedback value.	10 V: 100%	0.01%	–
U5-02 (63H)	PID Input	All Modes Displays the amount of PID input (deviation between PID setpoint and feedback).	10 V: 100%	0.01%	–

上正科技有限公司
購買・維修 此手冊零組件
電話： 037-466332
Email: service@repairtw.com
Line ID: @zzzz
www.repairtw.com

No. (Addr.)	Name	Description	Analog Output Level	Unit	Page
U5-03 (64H)	PID Output	All Modes Displays PID control output.	10 V: 100%	0.01%	–
U5-04 (65H)	PID Setpoint	All Modes Displays the PID setpoint.	10 V: 100%	0.01%	–
U5-05 (7D2H)	PID Differential Feedback	All Modes Displays the 2nd PID feedback value if differential feedback is used (H3-□□ = 16).	10 V: 100%	0.01%	–
U5-06 (7D3H)	PID Adjusted Feedback	All Modes Displays the difference of both feedback values if differential feedback is used (U5-01 - U5-05). If differential feedback is not used, then U5-01 and U5-06 will be the same.	10 V: 100%	0.01%	–

■ U6: Operation Status Monitors

No. (Addr.)	Name	Description	Analog Output Level	Unit	Page
U6-01 (51H)	Motor Secondary Current (Iq)	All Modes Displays the value of the motor secondary current (Iq). Motor rated secondary current is 100%.	10 V: Motor secondary rated current	0.1%	–
U6-02 (52H)	Motor Excitation Current (Id)	V/f, V/f w/PG, OLV, CLV, OLV/PM, AOLV/PM, CLV/PM Displays the value calculated for the motor excitation current (Id). Motor rated secondary current is 100%.	10 V: Motor secondary rated current	0.1%	–
U6-03 (54H)	ASR Input	V/f, V/f w/PG, OLV, CLV, OLV/PM, AOLV/PM, CLV/PM Displays the input and output values when using ASR control.	10 V: Max frequency	0.01%	–
U6-04 (55H)	ASR Output		10 V: Motor secondary rated current		
U6-05 (59H)	Output Voltage Reference (Vq)	V/f, V/f w/PG, OLV, CLV, OLV/PM, AOLV/PM, CLV/PM Output voltage reference (Vq) for the q-axis.	10 V: 200 Vrms <18>	0.1 Vac	–
U6-06 (5AH)	Output Voltage Reference (Vd)	V/f, V/f w/PG, OLV, CLV, OLV/PM, AOLV/PM, CLV/PM Output voltage reference (Vd) for the d-axis.	10 V: 200 Vrms <18>	0.1 Vac	–
U6-07 (5FH)	q-Axis ACR Output	V/f, V/f w/PG, OLV, CLV, OLV/PM, AOLV/PM, CLV/PM Displays the output value for current control relative to motor secondary current (q-axis).	10 V: 200 Vrms <18>	0.1%	–
U6-08 (60H)	d-Axis ACR Output	V/f, V/f w/PG, OLV, CLV, OLV/PM, AOLV/PM, CLV/PM Displays the output value for current control relative to motor secondary current (d-axis).	10 V: 200 Vrms <18>	0.1%	–
U6-09 (7C0H)	Advance Phase Compensation (Δ θ)	V/f, V/f w/PG, OLV, CLV, OLV/PM, AOLV/PM, CLV/PM Displays the degree of forward phase correction after calculating the deviation of Δθcmp.	10 V: 180 deg –10 V: –180 deg	0.1 deg	
U6-10 (7C1H)	Control Axis Deviation (Δθ)	V/f, V/f w/PG, OLV, CLV, OLV/PM, AOLV/PM, CLV/PM Displays the amount of deviation between the actual d-axis / q-axis and the γ-axis / δ-axis used for motor control.	10 V: 180 deg –10 V: –180 deg	0.1 deg	
U6-13 (7CAH)	Flux Position Detection (sensor)	V/f, V/f w/PG, OLV, CLV, OLV/PM, AOLV/PM, CLV/PM Monitors the value of the flux position detection (sensor).	10 V: 180 deg –10 V: –180 deg	0.1 deg	
U6-14 (7CBH)	Flux Position Estimation (observer)	V/f, V/f w/PG, OLV, CLV, OLV/PM, AOLV/PM, CLV/PM Monitors the value of the flux position estimation.	10 V: 180 deg –10 V: –180 deg	0.1 deg	
U6-18 (7CDH)	Speed Detection PG1 Counter	All Modes Monitors the number of pulses for speed detection (PG1).	10 V: 65536	1 pulse	
U6-19 (7E5H)	Speed Detection PG2 Counter	All Modes Monitors the number of pulses for speed detection (PG2).	10 V: 65536	1 pulse	
U6-20 (7D4H)	Frequency Reference Bias (Up/Down 2)	All Modes Displays the bias value used to adjust the frequency reference.	10 V: Max frequency	0.1%	–
U6-21 (7D5H)	Offset Frequency	All Modes Displays the frequency added to the main frequency reference.	–	0.1%	–

上正科技有限公司
購買、維修 此手冊零組件
電話：037-466333
Email: service@repairtw.com
Line id: @zzzz
www.repairtw.com

No. (Addr.)	Name	Description	Analog Output Level	Unit	Page
U6-22 (62H)	Zero Servo Pulse Movement	V/f V/f w/PG OLV CLV OLV/PM AOLV/PM CLV/PM Displays how far the rotor has moved from its last position in PG pulses (multiplied by 4).	10 V: No. of pulses per revolution	1	–
U6-25 (6BH)	Feedback Control Output	V/f V/f w/PG OLV CLV OLV/PM AOLV/PM CLV/PM Output monitor for the ASR speed loop.	10 V: Motor secondary rated current	0.01%	–
U6-26 (6CH)	Feed Forward Control Output	V/f V/f w/PG OLV CLV OLV/PM AOLV/PM CLV/PM Output monitor for Feed Forward control.	10 V: Motor secondary rated current	0.01%	–

<18> Values shown here are for 200 V class drives. Double the value when using a 400 V class drive.

■ U8: DriveWorksEZ Monitors

No. (Addr.)	Name	Description	Analog Output Level	Unit	Page
U8-01 to U8-10 (1950H to 1959H)	DriveWorksEZ Custom Monitor 1 to 10	All Modes DriveWorksEZ Custom Monitor 1 to 10	10 V: 100%	0.01%	–
U8-11 to U8-13 (195AH to 195CH)	DriveWorksEZ Version Control Monitor 1 to 3	All Modes DriveWorksEZ Version Control Monitor 1 to 3	No signal output available	–	–

上正科技有限公司
購買、維修 此手冊零組件
電話： 037-466333
Email: service@repairtw.com
Line id: @zzzz
www.repairtw.com

B.4 Control Mode Dependent Parameter Default Values

The tables below list parameters that depend on the control mode selection (A1-02 for motor 1, E3-01 for motor 2). These parameters are initialized to the shown values if the control mode is changed.

◆ A1-02 (Motor 1 Control Mode) Dependent Parameters

Table B.2 A1-02 (Motor 1 Control Mode) Dependent Parameters and Default Values

No.	Name	Setting Range	Resolution	Control Modes (A1-02)			
				V/f (0)	V/f w/PG (1)	OLV (2)	CLV (3)
b2-01	DC Injection Braking Start Frequency	0.0 to 10.0	0.1	0.5 Hz	0.5 Hz	0.5 Hz	0.5 Hz
b2-04	DC Injection Braking Time at Stop	0.00 to 10.00	0.01 s	0.50	0.50	0.50	0.50
b3-01	Speed Search Selection at Start	0 to 1	–	0	1	0	1
b3-02	Speed Search Deactivation Current	0 to 200	1%	120	–	100	–
b3-14	Bi-Directional Speed Search Selection	0 to 1	1	1	0	1	1
b8-01	Energy Saving Control Selection	0 to 1	–	0	0	0	0
b8-02	Energy Saving Gain	0.0 to 10.0	0.1	–	–	0.7	1.0
b8-03	Energy Saving Control Filter Time Constant	0.00 to 10.00	0.01 s	–	–	0.50, 2.00 (Motor Capacity: 55 kW and above)	0.01, 0.05 (Motor Capacity: 55 kW and above)
C2-01	S-Curve Time at Acceleration Start	0.00 to 10.00	0.01 s	0.20	0.20	0.20	0.20
C3-01	Slip Compensation Gain	0.0 to 2.5	0.1	0.0	–	1.0	1.0
C3-02	Slip Compensation Primary Delay Time	0 to 10000	1 ms	2000	–	200	–
C4-01	Torque Compensation Gain	0.00 to 2.50	0.01	1.00	1.00	1.00	–
C4-02	Torque Compensation Primary Delay Time	0 to 10000	1 ms	200	200	20	–
C5-01	ASR Proportional Gain 1	0.00 to 300.00	0.01	–	0.20	–	20.00
C5-02	ASR Integral Time 1	0.000 to 10.000	0.001 s	–	0.200	–	0.500
C5-03	ASR Proportional Gain 2	0.00 to 300.00	0.01	–	0.02	–	20.00
C5-04	ASR Integral Time 2	0.000 to 10.000	0.001 s	–	0.050	–	0.500
C5-06	ASR Primary Delay Time Constant	0.000 to 0.500	0.001 s	–	–	–	0.004
C6-02	Carrier Frequency Selection	1 to F	–	7 <9>	7 <9>	7 <9>	7 <9>
E1-04 to E1-10	The default setting of these parameters depends on the control mode but also on the drive capacity. Refer to *V/f Pattern Default Values on page 456*.						
F1-05	PG 1 Rotation Selection	0 to 1	–	0	0	0	0
F1-09	Overspeed Detection Delay Time	0.0 to 2.0	0.1 s	–	1.0	–	0.0
L1-01	Motor Overload Protection Selection	0 to 4	–	1	1	1	1
L3-20	DC Bus Voltage Adjustment Gain	0.00 to 5.00	0.01	1.00	1.00	0.30	0.30
L3-21	Accel/Decel Rate Calculation Gain	0.00 to 10.00	0.01	1.00	1.00	1.00	1.00
L4-02	Speed Agreement Detection Width	0.0 to 20.0	0.1	2.0 Hz	2.0 Hz	2.0 Hz	2.0 Hz
L4-04	Speed Agreement Detection Width (+/–)	0.0 to 20.0	0.1	2.0 Hz	2.0 Hz	2.0 Hz	2.0 Hz
L8-38	Carrier Frequency Reduction Selection	0 to 2	1	<9>	<9>	<9>	<9>
L8-40	Carrier Frequency Reduction Off Delay Time	0.00 to 2.00	0.01 s	0.50	0.50	0.50	0.50
o1-03	Digital Operator Display Selection	0 to 3	1	0	0	0	0
o1-04	V/f Pattern Display Unit	0 to 1	1	–	–	–	0

<9> Default setting is determined by the drive model (o2-04) and duty selection (C6-01).

台灣科技有限公司
購買、維修 此手冊零組件
電話：037-486333
Email：service@repairtw.com
Line id：@zzzz
www.repairtw.com

Table B.3 A1-02 (Motor 1 Control Mode) Dependent Parameters and Default Values

No.	Name	Setting Range	Resolution	Control Modes (A1-02)		
				OLV/PM (5)	AOLV/PM (6)	CLV/PM (7)
b2-01	DC Injection Braking Start Frequency	0.0 to 10.0	0.1	0.5 Hz	1.0% <41>	0.5% <41>
b2-04	DC Injection Braking Time at Stop	0.00 to 10.00	0.01 s	0.00	0.00	0.00
b3-01	Speed Search Selection at Start	0 to 1	–	0	0	1
b3-02	Speed Search Deactivation Current	0 to 200	1%	–	–	–
b3-14	Bi-Directional Speed Search Selection	0 to 1	1	1	1	1
b8-01	Energy Saving Control Selection	0 to 1	–	–	1	1
b8-02	Energy Saving Gain	0.0 to 10.0	0.1	–	–	–
b8-03	Energy Saving Control Filter Time Constant	0.00 to 10.00	0.01 s	–	–	–
C2-01	S-Curve Time at Acceleration Start	0.00 to 10.00	0.01 s	1.00	1.00	1.00
C3-01	Slip Compensation Gain	0.0 to 2.5	0.1	–	–	–
C3-02	Slip Compensation Primary Delay Time	0 to 10000	1 ms	–	–	–
C4-01	Torque Compensation Gain	0.00 to 2.50	0.01	0.00	0.00	0.00
C4-02	Torque Compensation Primary Delay Time	0 to 10000	1 ms	100	100	100
C5-01	ASR Proportional Gain 1	0.00 to 300.00	0.01	–	–	–
C5-02	ASR Integral Time 1	0.000 to 10.000	0.001 s	–	–	–
C5-03	ASR Proportional Gain 2	0.00 to 300.00	0.01	–	–	–
C5-04	ASR Integral Time 2	0.000 to 10.000	0.001 s	–	–	–
C5-06	ASR Primary Delay Time Constant	0.000 to 0.500	0.001 s	–	–	–
C6-02	Carrier Frequency Selection	1 to F	–	2	2	2
E1-04 to E1-10	The default setting of these parameters depends on the control mode but also on the drive capacity. Refer to *V/f Pattern Default Values on page 456*.					
F1-05	PG 1 Rotation Selection	0 to 1	–	1	1	1
F1-09	Overspeed Detection Delay Time	0.0 to 2.0	0.1 s	–	–	–
L1-01	Motor Overload Protection Selection	0 to 4	–	4	4	4
L3-20	DC Bus Voltage Adjustment Gain	0.00 to 5.00	0.01	0.65	0.65	0.65
L3-21	Accel/Decel Rate Calculation Gain	0.00 to 10.00	0.01	2.50	2.50	2.50
L4-02	Speed Agreement Detection Width	0.0 to 20.0	0.1	2.0Hz	4.0% <41>	4.0% <41>
L4-04	Speed Agreement Detection Width (+/–)	0.0 to 20.0	0.1	2.0Hz	4.0% <41>	4.0% <41>
L8-38	Carrier Frequency Reduction Selection	0 to 2	1	0	0	0
L8-40	Carrier Frequency Reduction Off Delay Time	0.00 to 2.00	0.01s	0.00	0.00	0.00
o1-03	Digital Operator Display Selection	0 to 3	1	0	1	1
o1-04	V/f Pattern Display Unit	0 to 1	1		1	1

<41> This default value is a calculated as a percentage of the maximum output frequency.

上正科技有限公司
購買、維修 此手冊零組件
電話： 037-466333
Email: service@repairtw.com
Line id: @zzzz
www.repairtw.com

◆ E3-01 (Motor 2 Control Mode) Dependent Parameters

Table B.4 E3-01 (Motor 2 Control Mode) Dependent Parameters and Default Values

No.	Name	Setting Range	Resolution	Control Modes (E3-01)			
				V/f (0)	V/f w/PG (1)	OLV (2)	CLV (3)
E3-04 to E3-10	The default setting of these parameters depends on the control mode but also on the drive capacity They are equivalent to the motor 1 settings. Refer to *V/f Pattern Default Values on page 456*.						

B.5 V/f Pattern Default Values

The tables below show the V/f pattern settings default values depending on the control mode (A1-02) and the V/f pattern selection (E1-03 in V/f Control).

Table B.5 E1-03 V/f Pattern Settings for Drive Capacity: CIMR-A□2A0004 to CIMR-A□2A0021, CIMR-A□4A0002 to CIMR-A□4A0011

No.	Units	V/f																OLV	CLV	OLV/PM AOLV/PM CLV/PM
E1-03	-	0	1	2	3	4	5	6	7	8	9	A	B	C	D	E	F <42>			
E1-04	Hz	50.0	60.0	60.0	72.0	50.0	50.0	60.0	60.0	50.0	50.0	60.0	60.0	90.0	120.0	180.0	50.0	50.0	50.0	<14>
E1-05 <18>	V	200.0	200.0	200.0	200.0	200.0	200.0	200.0	200.0	200.0	200.0	200.0	200.0	200.0	200.0	200.0	200.0	200.0	200.0	<14>
E1-06	Hz	50.0	60.0	50.0	60.0	50.0	50.0	60.0	60.0	50.0	50.0	60.0	60.0	60.0	60.0	60.0	50.0	50.0	50.0	<14>
E1-07	Hz	2.5	3.0	3.0	3.0	25.0	25.0	30.0	30.0	2.5	2.5	3.0	3.0	3.0	3.0	3.0	2.5	3.0	0.0	–
E1-08 <18>	V	15.0	15.0	15.0	15.0	35.0	50.0	35.0	50.0	19.0	24.0	19.0	24.0	15.0	15.0	15.0	15.0	14.4	0.0	–
E1-09	Hz	1.3	1.5	1.5	1.5	1.3	1.3	1.5	1.5	1.3	1.3	1.5	1.5	1.5	1.5	1.5	1.3	0.5	0.0	<14>
E1-10 <18>	V	9.0	9.0	9.0	9.0	8.0	9.0	8.0	9.0	11.0	13.0	11.0	15.0	9.0	9.0	9.0	9.0	3.0	0.0	–

<14> Default setting value is dependent on the motor code set to parameter E5-01.
<18> Values shown here are for 200 V class drives. Double the value when using a 400 V class drive.
<42> Default settings for E1-04 through E1-10 (E2-04 through E2-10 for motor 2).

Table B.6 E1-03 V/f Pattern Settings for Drive Capacity: CIMR-A□2A0030 to CIMR-A□2A0211, CIMR-A□4A0018 to CIMR-A□4A0103

No.	Units	V/f																OLV	CLV	OLV/PM AOLV/PM CLV/PM
E1-03	-	0	1	2	3	4	5	6	7	8	9	A	B	C	D	E	F <42>			
E1-04	Hz	50.0	60.0	60.0	72.0	50.0	50.0	60.0	60.0	50.0	50.0	60.0	60.0	90.0	120.0	180.0	50.0	50.0	50.0	<14>
E1-05 <18>	V	200.0	200.0	200.0	200.0	200.0	200.0	200.0	200.0	200.0	200.0	200.0	200.0	200.0	200.0	200.0	200.0	200.0	200.0	<14>
E1-06	Hz	50.0	60.0	50.0	60.0	50.0	50.0	60.0	60.0	50.0	50.0	60.0	60.0	60.0	60.0	60.0	50.0	50.0	50.0	<14>
E1-07	Hz	2.5	3.0	3.0	3.0	25.0	25.0	30.0	30.0	2.5	2.5	3.0	3.0	3.0	3.0	3.0	2.5	3.0	0.0	–
E1-08 <18>	V	14.0	14.0	14.0	14.0	35.0	50.0	35.0	50.0	18.0	23.0	18.0	23.0	14.0	14.0	14.0	14.0	13.2	0.0	–
E1-09	Hz	1.3	1.5	1.5	1.5	1.3	1.3	1.5	1.5	1.3	1.3	1.5	1.5	1.5	1.5	1.5	1.3	0.5	0.0	<14>
E1-10 <18>	V	7.0	7.0	7.0	7.0	6.0	7.0	6.0	7.0	9.0	11.0	9.0	13.0	7.0	7.0	7.0	7.0	2.4	0.0	–

<14> Default setting value is dependent on the motor code set to parameter E5-01.
<18> Values shown here are for 200 V class drives. Double the value when using a 400 V class drive.
<42> Default settings for E1-04 through E1-10 (E2-04 through E2-10 for motor 2).

昇正科技有限公司 精選維修 光手開電控件 電話：037466333 Email: service@repairtw.com line id: @zzzz www.repairtw.com

Table B.7 E1-03 V/f Pattern Settings for Drive Capacity: CIMR-A□2A0250 to CIMR-A□2A0415, CIMR-A□4A0139 to CIMR-A□4A0675

No.	Units	V/f																OLV	CLV	OLV/PM AOLV/PM CLV/PM
E1-03	-	0	1	2	3	4	5	6	7	8	9	A	B	C	D	E	F <42>			
E1-04	Hz	50.0	60.0	60.0	72.0	50.0	50.0	60.0	60.0	50.0	50.0	60.0	60.0	90.0	120.0	180.0	50.0	50.0	50.0	<14>
E1-05 <18>	V	200.0	200.0	200.0	200.0	200.0	200.0	200.0	200.0	200.0	200.0	200.0	200.0	200.0	200.0	200.0	200.0	200.0	200.0	<14>
E1-06	Hz	50.0	60.0	50.0	60.0	50.0	50.0	60.0	60.0	50.0	50.0	60.0	60.0	60.0	60.0	60.0	50.0	50.0	50.0	<14>
E1-07	Hz	2.5	3.0	3.0	3.0	25.0	25.0	30.0	30.0	2.5	2.5	3.0	3.0	3.0	3.0	3.0	2.5	3.0	0.0	–
E1-08 <18>	V	12.0	12.0	12.0	12.0	35.0	50.0	35.0	50.0	15.0	20.0	15.0	20.0	12.0	12.0	12.0	12.0	13.2	0.0	–
E1-09	Hz	1.3	1.5	1.5	1.5	1.3	1.3	1.5	1.5	1.3	1.3	1.5	1.5	1.5	1.5	1.5	1.3	0.5	0.0	<14>
E1-10 <18>	V	6.0	6.0	6.0	6.0	5.0	6.0	5.0	6.0	7.0	9.0	7.0	11.0	6.0	6.0	6.0	6.0	2.4	0.0	–

<14> Default setting value is dependent on the motor code set to parameter E5-01.
<18> Values shown here are for 200 V class drives. Double the value when using a 400 V class drive.
<42> Default settings for E1-04 through E1-10 (E2-04 through E2-10 for motor 2).

B.6 Defaults by Drive Model Selection (o2-04) and ND/HD (C6-01)

The following tables show parameters and default settings that change with the drive model selection (o2-04). Parameter numbers shown in parenthesis are valid for motor 2.

Table B.8 200 V Class Drives Default Settings by Drive Model Selection and ND/HD settings

No.	Name	Unit	Default Settings							
Model CIMR-A☐		–	2A0004		2A0006		2A0010		2A0012	
C6-01	Drive Duty Selection	–	HD	ND	HD	ND	HD	ND	HD	ND
			0	1	0	1	0	1	0	1
o2-04	Drive Model Selection	Hex.	62		63		65		66	
E2-11 (E4-11)	Motor rated Output	kW	0.4	0.75	0.75	1.1	1.5	2.2	2.2	3.0
b3-04	V/f Gain during Speed Search	%	100	100	100	100	100	100	100	100
b3-06	Output Current 1 during Speed Search	–	1	1	0.5	0.5	0.5	0.5	0.5	0.5
b8-03	Energy Saving Control Filter Time Constant	s	0.50	0.50	0.50	0.50	0.50	0.50	0.50	0.50
b8-04	Energy Saving Coefficient Value	–	288.2	223.7	223.7	196.6	169.4	156.8	156.8	136.4
C5-17 (C5-37)	Motor Inertia	kgm^2	0.0015	0.0028	0.0028	0.0068	0.0068	0.0088	0.0088	0.0158
C6-02	Carrier Frequency Selection	–	1	7	1	7	1	7	1	7
E2-01 (E4-01)	Motor Rated Current	A	1.9	3.3	3.3	4.9	6.2	8.5	8.5	11.4
E2-02 (E4-02)	Motor Rated Slip	Hz	2.9	2.5	2.5	2.6	2.6	2.9	2.9	2ÅD7
E2-03 (E4-03)	Motor No-Load Current	A	1.2	1.8	1.8	2.3	2.8	3	3	3.7
E2-05 (E4-05)	Motor Line to Line Resistance	Ω	9.842	5.156	5.156	3.577	1.997	1.601	1.601	1.034
E2-06 (E4-06)	Motor Leakage Inductance	%	18.2	13.8	13.8	18.5	18.5	18.4	18.4	19
E2-10 (E4-10)	Motor Iron Loss for Torque Compensation	W	14	26	26	38	53	77	77	91
E5-01	Motor Code Selection	Hex.	1202	1202	1203	1203	1205	1205	1206	1206
L2-02	Momentary Power Loss Ride-Thru Time	s	0.1	0.1	0.2	0.2	0.3	0.3	0.5	0.5
L2-03	Momentary Power Loss Minimum Baseblock Time	s	0.2	0.3	0.3	0.4	0.4	0.5	0.5	0.5
L2-04	Momentary Power Loss Voltage Recovery Time	s	0.3	0.3	0.3	0.3	0.3	0.3	0.3	0.3
L3-24	Motor Acceleration Time for Inertia Calculations	s	0.178	0.142	0.142	0.142	0.166	0.145	0.145	0.145
L8-02	Overheat Alarm Level	°C	115	115	115	115	115	115	125	125
L8-35	Installation Method Selection	–	2	2	2	2	2	2	2	2
L8-38	Carrier Frequency Reduction Selection	–	2	2	2	2	2	2	2	2
n1-03	Hunting Prevention Time Constant	ms	10	10	10	10	10	10	10	10
n5-02	Motor Acceleration Time	s	0.178	0.142	0.142	0.142	0.166	0.145	0.145	0.145

上正科技有限公司
購買、維修此手冊零組件
電話：037-466333
Email: service@repairtw.com
Line id: @zzzz
www.repairtw.com

No.	Name	Unit	Default Settings							
Model CIMR-A☐		–	2A0021		2A0030		2A0040		2A0056	
C6-01	Drive Duty Selection	–	HD	ND	HD	ND	HD	ND	HD	ND
			0	1	0	1	0	1	0	1
o2-04	Drive Model Selection	Hex.	68		6A		6B		6D	
E2-11 (E4-11)	Motor rated Output	kW	3.7	5.5	5.5	7.5	7.5	11	11	15
b3-04	V/f Gain during Speed Search	%	100	100	100	100	100	100	100	100
b3-06	Output Current 1 during Speed Search	–	0.5	0.5	0.5	0.5	0.5	0.5	0.5	0.5
b8-03	Energy Saving Control Filter Time Constant	s	0.50	0.50	0.50	0.50	0.50	0.50	0.50	0.50
b8-04	Energy Saving Coefficient Value	–	122.9	94.75	94.75	72.69	72.69	70.44	70.44	63.13
C5-17 (C5-37)	Motor Inertia	kgm^2	0.0158	0.0255	0.026	0.037	0.037	0.053	0.053	0.076
C6-02	Carrier Frequency Selection	–	1	7	1	7	1	7	1	7
E2-01 (E4-01)	Motor Rated Current	A	14	19.6	19.6	26.6	26.6	39.7	39.7	53
E2-02 (E4-02)	Motor Rated Slip	Hz	2.73	1.5	1.5	1.3	1.3	1.7	1.7	1.6
E2-03 (E4-03)	Motor No-Load Current	A	4.5	5.1	5.1	8	8	11.2	11.2	15.2
E2-05 (E4-05)	Motor Line to Line Resistance	Ω	0.771	0.399	0.399	0.288	0.288	0.23	0.23	0.138
E2-06 (E4-06)	Motor Leakage Inductance	%	19.6	18.2	18.2	15.5	15.5	19.5	19.5	17.2
E2-10 (E4-10)	Motor Iron Loss for Torque Compensation	W	112	172	172	262	262	245	245	272
E5-01	Motor Code Selection	Hex.	1208	1208	120A	120A	120B	120B	120D	120D
L2-02	Momentary Power Loss Ride-Thru Time	s	1	1	1	1	1	1	2	2
L2-03	Momentary Power Loss Minimum Baseblock Time	s	0.6	0.7	0.7	0.8	0.8	0.9	0.9	1
L2-04	Momentary Power Loss Voltage Recovery Time	s	0.3	0.3	0.3	0.3	0.3	0.3	0.3	0.6
L3-24	Motor Acceleration Time for Inertia Calculations	s	0.154	0.168	0.168	0.175	0.175	0.265	0.265	0.244
L8-02	Overheat Alarm Level	°C	110	110	120	120	125	125	120	120
L8-35	Installation Method Selection	–	2	2	2	2	2	2	2	2
L8-38	Carrier Frequency Reduction Selection	–	2	2	2	2	2	2	2	2
n1-03	Hunting Prevention Time Constant	ms	10	10	10	10	10	10	10	10
n5-02	Motor Acceleration Time	s	0.154	0.168	0.168	0.175	0.175	0.265	0.265	0.244

No.	Name	Unit	Default Settings							
Model CIMR-A□		–	2A0069		2A0081		2A0110		2A0138	
C6-01	Drive Duty Selection	–	HD	ND	HD	ND	HD	ND	HD	ND
			0	1	0	1	0	1	0	1
o2-04	Drive Model Selection	Hex.	6E		6F		70		72	
E2-11 (E4-11)	Motor rated Output	kW	15	18.5	18.5	22	22	30	30	37
b3-04	V/f Gain during Speed Search	%	100	100	100	100	100	80	80	80
b3-06	Output Current 1 during Speed Search	–	0.5	0.5	0.5	0.5	0.5	0.5	0.5	0.5
b8-03	Energy Saving Control Filter Time Constant	s	0.50	0.50	0.50	0.50	0.50	0.50	0.50	0.50
b8-04	Energy Saving Coefficient Value	–	63.13	57.87	57.87	51.79	51.79	46.27	46.27	38.16
C5-17 (C5-37)	Motor Inertia	kgm^2	0.076	0.138	0.138	0.165	0.165	0.220	0.220	0.273
C6-02	Carrier Frequency Selection	–	1	7	1	7	1	7	1	7
E2-01 (E4-01)	Motor Rated Current	A	53	65.8	65.8	77.2	77.2	105	105	131
E2-02 (E4-02)	Motor Rated Slip	Hz	1.6	1.67	1.67	1.7	1.7	1.8	1.8	1.33
E2-03 (E4-03)	Motor No-Load Current	A	15.2	15.7	15.7	18.5	18.5	21.9	21.9	38.2
E2-05 (E4-05)	Motor Line to Line Resistance	Ω	0.138	0.101	0.101	0.079	0.079	0.064	0.064	0.039
E2-06 (E4-06)	Motor Leakage Inductance	%	17.2	15.7	20.1	19.5	19.5	20.8	20.8	18.8
E2-10 (E4-10)	Motor Iron Loss for Torque Compensation	W	272	505	505	538	538	699	699	823
E5-01	Motor Code Selection	Hex.	120E	120E	120F	120F	1210	1210	1212	1212
L2-02	Momentary Power Loss Ride-Thru Time	s	2	2	2	2	2	2	2	2
L2-03	Momentary Power Loss Minimum Baseblock Time	s	1	1	1	1	1	1.1	1.1	1.1
L2-04	Momentary Power Loss Voltage Recovery Time	s	0.6	0.6	0.6	0.6	0.6	0.6	0.6	0.6
L3-24	Motor Acceleration Time for Inertia Calculations	s	0.244	0.317	0.317	0.355	0.355	0.323	0.323	0.32
L8-02	Overheat Alarm Level	°C	120	120	125	125	130	130	130	130
L8-35	Installation Method Selection	–	2	2	2	2	0	0	0	0
L8-38	Carrier Frequency Reduction Selection	–	2	2	2	2	2	2	2	2
n1-03	Hunting Prevention Time Constant	ms	10	10	10	10	10	10	10	10
n5-02	Motor Acceleration Time	s	0.244	0.317	0.317	0.355	0.355	0.323	0.323	0.32

上正科技有限公司
購買維修 此手冊零組件
電話：03-4663333
Email: service@repairtw.com
Line id: @zzzz
www.repairtw.com

No.	Name	Unit	Default Settings					
Model CIMR-A□		–	2A0169		2A0211		2A0250	
C6-01	Drive Duty Selection	–	HD	ND	HD	ND	HD	ND
			0	1	0	1	0	1
o2-04	Drive Model Selection	Hex.	73		74		75	
E2-11 (E4-11)	Motor rated Output	kW	37	45	45	55	55	75
b3-04	V/f Gain during Speed Search	%	80	80	80	80	80	80
b3-06	Output Current 1 during Speed Search	–	0.5	0.5	0.5	0.5	0.5	0.7
b8-03	Energy Saving Control Filter Time Constant	s	0.50	0.50	0.50	2.00	2.00	2.00
b8-04	Energy Saving Coefficient Value	–	38.16	35.78	35.78	31.35	31.35	23.1
C5-17 (C5-37)	Motor Inertia	kgm^2	0.273	0.333	0.333	0.490	0.49	0.90
C6-02	Carrier Frequency Selection	–	1	7	1	7	1	7
E2-01 (E4-01)	Motor Rated Current	A	131	160	160	190	190	260
E2-02 (E4-02)	Motor Rated Slip	Hz	1.33	1.6	1.6	1.43	1.43	1.39
E2-03 (E4-03)	Motor No-Load Current	A	38.2	44	44	45.6	45.6	72
E2-05 (E4-05)	Motor Line to Line Resistance	Ω	0.039	0.03	0.03	0.022	0.022	0.023
E2-06 (E4-06)	Motor Leakage Inductance	%	18.8	20.2	20.2	20.5	20.5	20
E2-10 (E4-10)	Motor Iron Loss for Torque Compensation	W	823	852	852	960	960	1200
E5-01	Motor Code Selection	Hex.	1213	1213	1214	1214	1215	1215
L2-02	Momentary Power Loss Ride-Thru Time	s	2	2	2	2	2	2
L2-03	Momentary Power Loss Minimum Baseblock Time	s	1.1	1.2	1.2	1.3	1.3	1.5
L2-04	Momentary Power Loss Voltage Recovery Time	s	0.6	1	1	1	1	1
L3-24	Motor Acceleration Time for Inertia Calculations	s	0.32	0.387	0.387	0.317	0.317	0.533
L8-02	Overheat Alarm Level	°C	130	130	125	125	115	115
L8-35	Installation Method Selection	–	0	0	0	0	0	0
L8-38	Carrier Frequency Reduction Selection	–	2	2	2	2	2	2
n1-03	Hunting Prevention Time Constant	ms	10	10	10	10	10	10
n5-02	Motor Acceleration Time	s	0.32	0.387	0.387	0.317	0.317	0.533

No.	Name	Unit	Default Settings					
Model CIMR-A☐		–	2A0312		2A0360		2A0415	
C6-01	Drive Duty Selection	–	HD	ND	HD	ND	HD	ND
			0	1	0	1	0	1
o2-04	Drive Model Selection	Hex.	76		77		78	
E2-11 (E4-11)	Motor rated Output	kW	75	90	90	110	110	110
b3-04	V/f Gain during Speed Search	%	80	80	80	80	80	80
b3-06	Output Current 1 during Speed Search	–	0.7	0.7	0.7	0.7	0.7	0.7
b8-03	Energy Saving Control Filter Time Constant	s	2.00	2.00	2.00	2.00	2.00	2.00
b8-04	Energy Saving Coefficient Value	–	23.1	20.65	20.65	18.12	18.12	18.12
C5-17 (C5-37)	Motor Inertia	kgm^2	0.90	1.10	1.10	1.90	1.90	1.90
C6-02	Carrier Frequency Selection	–	1	7	1	7	1	7
E2-01 (E4-01)	Motor Rated Current	A	260	260	260	260	260	260
E2-02 (E4-02)	Motor Rated Slip	Hz	1.39	1.39	1.39	1.39	1.39	1.39
E2-03 (E4-03)	Motor No-Load Current	A	72	72	72	72	72	72
E2-05 (E4-05)	Motor Line to Line Resistance	Ω	0.023	0.023	0.023	0.023	0.023	0.023
E2-06 (E4-06)	Motor Leakage Inductance	%	20	20	20	20	20	20
E2-10 (E4-10)	Motor Iron Loss for Torque Compensation	W	1200	1200	1200	1200	1200	1200
E5-01	Motor Code Selection	Hex.	1216	1216	FFFF	FFFF	FFFF	FFFF
L2-02	Momentary Power Loss Ride-Thru Time	s	2	2	2	2	2	2
L2-03	Momentary Power Loss Minimum Baseblock Time	s	1.5	1.5	1.5	1.7	1.7	1.7
L2-04	Momentary Power Loss Voltage Recovery Time	s	1	1	1	1	1	1
L3-24	Motor Acceleration Time for Inertia Calculations	s	0.533	0.592	0.592	0.646	0.646	0.646
L8-02	Overheat Alarm Level	°C	120	120	120	120	120	120
L8-35	Installation Method Selection	–	0	0	0	0	0	0
L8-38	Carrier Frequency Reduction Selection	–	2	2	2	2	2	2
n1-03	Hunting Prevention Time Constant	ms	10	10	100	100	100	100
n5-02	Motor Acceleration Time	s	0.533	0.592	0.592	0.646	0.646	0.646

上正科技有限公司
購買、維修 此手冊零組件
電話：037-466333
Email: service@repairtw.com
Line Id: @zzz
www.repairtw.com

Table B.9 400 V Class Drives Default Settings by Drive Capacity and ND/HD Setting

No.	Name	Unit	Default Settings							
Model CIMR-A☐		–	4A0002		4A0004		4A0005		4A0007	
C6-01	Drive Duty Selection	–	HD	ND	HD	ND	HD	ND	HD	ND
			0	1	0	1	0	1	0	1
o2-04	Drive Model Selection	Hex.	92		93		94		95	
E2-11 (E4-11)	Motor rated Output	kW	0.4	0.75	0.75	1.5	1.5	2.2	2.2	3.0
b3-04	V/f Gain during Speed Search	%	100	100	100	100	100	100	100	100
b3-06	Output Current 1 during Speed Search	–	0.5	0.5	0.5	0.5	0.5	0.5	0.5	0.5
b8-03	Energy Saving Control Filter Time Constant	s	0.50	0.50	0.50	0.50	0.50	0.50	0.50	0.50
b8-04	Energy Saving Coefficient Value	–	576.4	447.4	447.4	338.8	338.8	313.6	313.6	265.7
C5-17 (C5-37)	Motor Inertia	kgm^2	0.0015	0.0028	0.0028	0.0068	0.0068	0.0088	0.0088	0.0158
C6-02	Carrier Frequency Selection	–	1	7	1	7	1	7	1	7
E2-01 (E4-01)	Motor Rated Current	A	1	1.6	1.6	3.1	3.1	4.2	4.2	5.7
E2-02 (E4-02)	Motor Rated Slip	Hz	2.9	2.6	2.6	2.5	2.5	3	3	2.7
E2-03 (E4-03)	Motor No-Load Current	A	0.6	0.8	0.8	1.4	1.4	1.5	1.5	1.9
E2-05 (E4-05)	Motor Line to Line Resistance	Ω	38.198	22.459	22.459	10.1	10.1	6.495	6.495	4.360
E2-06 (E4-06)	Motor Leakage Inductance	%	18.2	14.3	14.3	18.3	18.3	18.7	18.7	19
E2-10 (E4-10)	Motor Iron Loss for Torque Compensation	W	14	26	26	53	53	77	77	105
E5-01	Motor Code Selection	Hex.	1232	1232	1233	1233	1235	1235	1236	1236
L2-02	Momentary Power Loss Ride-Thru Time	s	0.1	0.1	0.2	0.2	0.3	0.3	0.5	0.5
L2-03	Momentary Power Loss Minimum Baseblock Time	s	0.2	0.3	0.3	0.4	0.4	0.5	0.5	0.5
L2-04	Momentary Power Loss Voltage Recovery Time	s	0.3	0.3	0.3	0.3	0.3	0.3	0.3	0.3
L3-24	Motor Acceleration Time for Inertia Calculations	s	0.178	0.142	0.142	0.166	0.166	0.145	0.145	0.145
L8-02	Overheat Alarm Level	°C	110	110	110	110	110	110	110	110
L8-35	Installation Method Selection	–	2	2	2	2	2	2	2	2
L8-38	Carrier Frequency Reduction Selection	–	2	2	2	2	2	2	2	2
n1-03	Hunting Prevention Time Constant	ms	10	10	10	10	10	10	10	10
n5-02	Motor Acceleration Time	s	0.178	0.142	0.142	0.166	0.166	0.145	0.145	0.145

No.	Name	Unit	Default Settings							
Model CIMR-A□		–	4A0009		4A0011		4A0018		4A0023	
C6-01	Drive Duty Selection	–	HD	ND	HD	ND	HD	ND	HD	ND
			0	1	0	1	0	1	0	1
o2-04	Drive Model Selection	Hex.	96		97		99		9A	
E2-11 (E4-11)	Motor rated Output	kW	3.0	3.7	3.7	5.5	5.5	7.5	7.5	11
b3-04	V/f Gain during Speed Search	%	100	100	100	100	100	100	100	100
b3-06	Output Current 1 during Speed Search	–	0.5	0.5	0.5	0.5	0.5	0.5	0.5	0.5
b8-03	Energy Saving Control Filter Time Constant	s	0.50	0.50	0.50	0.50	0.50	0.50	0.50	0.50
b8-04	Energy Saving Coefficient Value	–	265.7	245.8	245.8	189.5	189.5	145.38	145.38	140.88
C5-17 (C5-37)	Motor Inertia	kgm²	0.0158	0.0158	0.0158	0.0255	0.026	0.037	0.037	0.053
C6-02	Carrier Frequency Selection	–	1	7	1	7	1	7	1	7
E2-01 (E4-01)	Motor Rated Current	A	5.7	7	7	9.8	9.8	13.3	13.3	19.9
E2-02 (E4-02)	Motor Rated Slip	Hz	2.7	2.7	2.7	1.5	1.5	1.3	1.3	1.7
E2-03 (E4-03)	Motor No-Load Current	A	1.9	2.3	2.3	2.6	2.6	4	4	5.6
E2-05 (E4-05)	Motor Line to Line Resistance	Ω	4.360	3.333	3.333	1.595	1.595	1.152	1.152	0.922
E2-06 (E4-06)	Motor Leakage Inductance	%	19	19.3	19.3	18.2	18.2	15.5	15.5	19.6
E2-10 (E4-10)	Motor Iron Loss for Torque Compensation	W	105	130	130	193	193	263	263	385
E5-01	Motor Code Selection	Hex.	FFFF	FFFF	1238	1238	123A	123A	123B	123B
L2-02	Momentary Power Loss Ride-Thru Time	s	0.5	0.5	0.5	0.5	0.8	0.8	1	1
L2-03	Momentary Power Loss Minimum Baseblock Time	s	0.5	0.6	0.6	0.7	0.7	0.8	0.8	0.9
L2-04	Momentary Power Loss Voltage Recovery Time	s	0.3	0.3	0.3	0.3	0.3	0.3	0.3	0.3
L3-24	Motor Acceleration Time for Inertia Calculations	s	0.145	0.154	0.154	0.168	0.168	0.175	0.175	0.265
L8-02	Overheat Alarm Level	°C	110	110	110	110	110	110	115	115
L8-35	Installation Method Selection	–	2	2	2	2	2	2	2	2
L8-38	Carrier Frequency Reduction Selection	–	2	2	2	2	2	2	2	2
n1-03	Hunting Prevention Time Constant	ms	10	10	10	10	10	10	10	10
n5-02	Motor Acceleration Time	s	0.145	0.154	0.154	0.168	0.168	0.175	0.175	0.265

上正科技有限公司
購買、維修 此手冊零組件
電話：037-466333
Email: service@repairtw.com
Line id: @3zzz
www.repairtw.com

No.	Name	Unit	Default Settings							
Model CIMR-A□		–	4A0031		4A0038		4A0044		4A0058	
C6-01	Drive Duty Selection	–	HD	ND	HD	ND	HD	ND	HD	ND
			0	1	0	1	0	1	0	1
o2-04	Drive Model Selection	Hex.	9C		9D		9E		9F	
E2-11 (E4-11)	Motor rated Output	kW	11	15	15	18.5	18.5	22	22	30
b3-04	V/f Gain during Speed Search	%	100	100	100	100	100	100	100	100
b3-06	Output Current 1 during Speed Search	–	0.5	0.5	0.5	0.5	0.5	0.5	0.5	0.5
b8-03	Energy Saving Control Filter Time Constant	s	0.50	0.50	0.50	0.50	0.50	0.50	0.50	0.50
b8-04	Energy Saving Coefficient Value	–	140.88	126.26	126.26	115.74	115.74	103.58	103.58	92.54
C5-17 (C5-37)	Motor Inertia	kgm²	0.053	0.076	0.076	0.138	0.138	0.165	0.165	0.220
C6-02	Carrier Frequency Selection	–	1	7	1	7	1	7	1	7
E2-01 (E4-01)	Motor Rated Current	A	19.9	26.5	26.5	32.9	32.9	38.6	38.6	52.3
E2-02 (E4-02)	Motor Rated Slip	Hz	1.7	1.6	1.6	1.67	1.67	1.7	1.7	1.8
E2-03 (E4-03)	Motor No-Load Current	A	5.6	7.6	7.6	7.8	7.8	9.2	9.2	10.9
E2-05 (E4-05)	Motor Line to Line Resistance	Ω	0.922	0.55	0.55	0.403	0.403	0.316	0.316	0.269
E2-06 (E4-06)	Motor Leakage Inductance	%	19.6	17.2	17.2	20.1	20.1	23.5	23.5	20.7
E2-10 (E4-10)	Motor Iron Loss for Torque Compensation	W	385	440	440	508	508	586	586	750
E5-01	Motor Code Selection	Hex.	123D	123D	123E	123E	123F	123F	1240	1240
L2-02	Momentary Power Loss Ride-Thru Time	s	2	2	2	2	2	2	2	2
L2-03	Momentary Power Loss Minimum Baseblock Time	s	0.9	1	1	1	1	1	1	1.1
L2-04	Momentary Power Loss Voltage Recovery Time	s	0.3	0.6	0.6	0.6	0.6	0.6	0.6	0.6
L3-24	Motor Acceleration Time for Inertia Calculations	s	0.265	0.244	0.244	0.317	0.317	0.355	0.355	0.323
L8-02	Overheat Alarm Level	°C	120	120	120	120	115	115	120	120
L8-35	Installation Method Selection	–	2	2	2	2	2	2	0	0
L8-38	Carrier Frequency Reduction Selection	–	2	2	2	2	2	2	2	2
n1-03	Hunting Prevention Time Constant	ms	10	10	10	10	10	10	10	10
n5-02	Motor Acceleration Time	s	0.265	0.244	0.244	0.317	0.317	0.355	0.355	0.323

No.	Name	Unit	Default Settings							
Model CIMR-A☐		–	4A0072		4A0088		4A0103		4A0139	
C6-01	Drive Duty Selection	–	HD	ND	HD	ND	HD	ND	HD	ND
			0	1	0	1	0	1	0	1
o2-04	Drive Model Selection	Hex.	A1		A2		A3		A4	
E2-11 (E4-11)	Motor rated Output	kW	30	37	37	45	45	55	55	75
b3-04	V/f Gain during Speed Search	%	100	100	100	100	100	80	80	60
b3-06	Output Current 1 during Speed Search	–	0.5	0.5	0.5	0.5	0.5	0.5	0.5	0.7
b8-03	Energy Saving Control Filter Time Constant	s	0.50	0.50	0.50	0.50	0.50	2.00	2.00	2.00
b8-04	Energy Saving Coefficient Value	–	92.54	76.32	76.32	71.56	71.56	67.2	67.2	46.2
C5-17 (C5-37)	Motor Inertia	kgm²	0.220	0.273	0.273	0.333	0.333	0.490	0.49	0.90
C6-02	Carrier Frequency Selection	–	1	7	1	7	1	7	1	7
E2-01 (E4-01)	Motor Rated Current	A	52.3	65.6	65.6	79.7	79.7	95	95	130
E2-02 (E4-02)	Motor Rated Slip	Hz	1.8	1.33	1.33	1.6	1.6	1.46	1.46	1.39
E2-03 (E4-03)	Motor No-Load Current	A	10.9	19.1	19.1	22	22	24	24	36
E2-05 (E4-05)	Motor Line to Line Resistance	Ω	0.269	0.155	0.155	0.122	0.122	0.088	0.088	0.092
E2-06 (E4-06)	Motor Leakage Inductance	%	20.7	18.8	18.8	19.9	19.9	20	20	20
E2-10 (E4-10)	Motor Iron Loss for Torque Compensation	W	750	925	925	1125	1125	1260	1260	1600
E5-01	Motor Code Selection	Hex.	1242	1242	1243	1243	1244	1244	1245	1245
L2-02	Momentary Power Loss Ride-Thru Time	s	2	2	2	2	2	2	2	2
L2-03	Momentary Power Loss Minimum Baseblock Time	s	1.1	1.1	1.1	1.2	1.2	1.2	1.2	1.3
L2-04	Momentary Power Loss Voltage Recovery Time	s	0.6	0.6	0.6	0.6	0.6	1	1	1
L3-24	Motor Acceleration Time for Inertia Calculations	s	0.323	0.32	0.32	0.387	0.387	0.317	0.317	0.533
L8-02	Overheat Alarm Level	°C	120	120	110	110	120	120	130	130
L8-35	Installation Method Selection	–	0	0	0	0	0	0	0	0
L8-38	Carrier Frequency Reduction Selection	–	2	2	2	2	2	2	2	2
n1-03	Hunting Prevention Time Constant	ms	10	10	10	10	10	10	30	30
n5-02	Motor Acceleration Time	s	0.323	0.32	0.32	0.387	0.387	0.317	0.317	0.533

上正科技有限公司
購買、維修 此手冊零組件
電話：037-456333
Email: service@repairtw.com
Line id: @zzzz
www.repairtw.com

No.	Name	Unit	Default Settings							
Model CIMR-A☐		–	4A0165		4A0208		4A0250		4A0296	
C6-01	Drive Duty Selection	–	HD	ND	HD	ND	HD	ND	HD	ND
			0	1	0	1	0	1	0	1
o2-04	Drive Model Selection	Hex.	A5		A6		A7		A8	
E2-11 (E4-11)	Motor rated Output	kW	75	90	90	110	110	132	132	160
b3-04	V/f Gain during Speed Search	%	60	60	60	60	60	60	60	60
b3-06	Output Current 1 during Speed Search	–	0.7	0.7	0.7	0.7	0.7	0.7	0.7	0.7
b8-03	Energy Saving Control Filter Time Constant	s	2.00	2.00	2.00	2.00	2.00	2.00	2.00	2.00
b8-04	Energy Saving Coefficient Value	–	46.2	38.91	38.91	36.23	36.23	32.79	32.79	30.13
C5-17 (C5-37)	Motor Inertia	kgm²	0.90	1.10	1.10	1.90	1.90	2.10	2.10	3.30
C6-02	Carrier Frequency Selection	–	1	7	1	7	1	7	1	7
E2-01 (E4-01)	Motor Rated Current	A	130	156	156	190	190	223	223	270
E2-02 (E4-02)	Motor Rated Slip	Hz	1.39	1.4	1.4	1.4	1.4	1.38	1.38	1.35
E2-03 (E4-03)	Motor No-Load Current	A	36	40	40	49	49	58	58	70
E2-05 (E4-05)	Motor Line to Line Resistance	Ω	0.092	0.056	0.056	0.046	0.046	0.035	0.035	0.029
E2-06 (E4-06)	Motor Leakage Inductance	%	20	20	20	20	20	20	20	20
E2-10 (E4-10)	Motor Iron Loss for Torque Compensation	W	1600	1760	1760	2150	2150	2350	2350	2850
E5-01	Motor Code Selection	Hex.	1246	1246	1247	1247	1248	1248	1249	1249
L2-02	Momentary Power Loss Ride-Thru Time	s	2	2	2	2	2	2	2	2
L2-03	Momentary Power Loss Minimum Baseblock Time	s	1.3	1.5	1.5	1.7	1.7	1.7	1.7	1.8
L2-04	Momentary Power Loss Voltage Recovery Time	s	1	1	1	1	1	1	1	1
L3-24	Motor Acceleration Time for Inertia Calculations	s	0.533	0.592	0.592	0.646	0.646	0.673	0.673	0.777
L8-02	Overheat Alarm Level	°C	130	130	120	120	120	120	125	125
L8-35	Installation Method Selection	–	0	0	0	0	0	0	0	0
L8-38	Carrier Frequency Reduction Selection	–	2	2	2	2	2	2	2	2
n1-03	Hunting Prevention Time Constant	ms	30	30	30	30	30	30	30	30
n5-02	Motor Acceleration Time	s	0.533	0.592	0.592	0.646	0.646	0.673	0.673	0.777

No.	Name	Unit	Default Settings							
Model CIMR-A□		–	4A0362		4A0414		4A0515		4A0675	
C6-01	Drive Duty Selection	–	HD	ND	HD	ND	HD	ND	HD	ND
			0	1	0	1	0	1	0	1
o2-04	Drive Model Selection	Hex.	A9		AA		AC		AE	
E2-11 (E4-11)	Motor rated Output	kW	160	185	185	220	220	250	315	355
b3-04	V/f Gain during Speed Search	%	60	60	60	60	60	60	60	60
b3-06	Output Current 1 during Speed Search	–	0.7	0.7	0.7	0.7	0.7	0.7	0.7	0.7
b8-03	Energy Saving Control Filter Time Constant	s	2.00	2.00	2.00	2.00	2.00	2.00	2.00	2.00
b8-04	Energy Saving Coefficient Value	–	30.13	30.57	30.57	27.13	27.13	21.76	21.76	23.84
C5-17 (C5-37)	Motor Inertia	kgm^2	3.30	3.60	3.60	4.10	4.10	6.50	11.00	12.00
C6-02	Carrier Frequency Selection	–	1	7	1	7	1	7	1	7
E2-01 (E4-01)	Motor Rated Current	A	270	310	310	370	370	500	500	650
E2-02 (E4-02)	Motor Rated Slip	Hz	1.35	1.3	1.3	1.3	1.3	1.25	1.25	1
E2-03 (E4-03)	Motor No-Load Current	A	70	81	81	96	96	130	130	130
E2-05 (E4-05)	Motor Line to Line Resistance	Ω	0.029	0.025	0.025	0.02	0.02	0.014	0.014	0.012
E2-06 (E4-06)	Motor Leakage Inductance	%	20	20	20	20	20	20	20	20
E2-10 (E4-10)	Motor Iron Loss for Torque Compensation	W	2850	3200	3200	3700	3700	4700	4700	5560
E5-01	Motor Code Selection	Hex.	124A	124A	FFFF	FFFF	FFFF	FFFF	FFFF	FFFF
L2-02	Momentary Power Loss Ride-Thru Time	s	2	2	2	2	2	2	2	2
L2-03	Momentary Power Loss Minimum Baseblock Time	s	1.8	1.9	1.9	2	2	2.1	2.1	2.3
L2-04	Momentary Power Loss Voltage Recovery Time	s	1	1	1	1	1	1	1	1
L3-24	Motor Acceleration Time for Inertia Calculations	s	0.777	0.864	0.864	0.91	0.91	1.392	1.392	1.667
L8-02	Overheat Alarm Level	°C	130	130	140	140	140	140	140	140
L8-35	Installation Method Selection	–	0	0	0	0	0	0	0	0
L8-38	Carrier Frequency Reduction Selection	–	2	2	2	2	2	2	2	2
n1-03	Hunting Prevention Time Constant	ms	30	30	100	100	100	100	100	100
n5-02	Motor Acceleration Time	s	0.777	0.864	0.864	0.91	0.91	1.392	1.392	1.667

上正科技有限公司
購買、維修 此手冊零組件
電話： 037-466333
Email: service@repairtw.com
Line id: @zzzz
www.repairtw.com

B.7 Parameters that Change with the Motor Code Selection

The following tables show parameters and default settings that change with the motor code selection E5-01 when Open Loop Vector for PM motors is used.

◆ YASKAWA SMRA Series SPM Motor

Table B.10 200 V, 1800 r/min Type YASKAWA SMRA Series SPM Motor

No.	Name	Unit	Default Settings				
E5-01	Motor Code Selection	–	0002	0003	0005	0006	0008
	Voltage Class	V	200	200	200	200	200
	Rated Power	kW	0.4	0.75	1.5	2.2	3.7
	Rated Speed	r/min	1800	1800	1800	1800	1800
E5-02	Motor Rated Power	kW	0.4	0.75	1.5	2.2	3.7
E5-03	Motor Rated Current	A	2.1	4.0	6.9	10.8	17.4
E5-04	Number of Motor Poles	–	8	8	8	8	8
E5-05	Motor Stator Resistance (r1)	Ω	2.47	1.02	0.679	0.291	0.169
E5-06	Motor d-Axis Inductance (Ld)	mH	12.7	4.8	3.9	3.6	2.5
E5-07	Motor q-Axis Inductance (Lq)	mH	12.7	4.8	3.9	3.6	2.5
E5-09	Motor Induction Voltage Constant 1 (Ke)	mVs/rad	0	0	0	0	0
E5-24	Motor Induction Voltage Constant 2 (Ke)	mV/(r/min)	62.0	64.1	73.4	69.6	72.2
E1-04	Maximum Output Frequency	Hz	120	120	120	120	120
E1-05	Maximum Voltage	V	200.0	200.0	200.0	200.0	200.0
E1-06	Base Frequency	Hz	120	120	120	120	120
E1-09	Minimum Output Frequency	Hz	6	6	6	6	6
C5-17	Motor Inertia	kgm^2	0.0007	0.0014	0.0021	0.0032	0.0046
L3-24	Motor Acceleration Time for Inertia Calculations	s	0.064	0.066	0.049	0.051	0.044
n5-02	Motor Acceleration Time	s	0.064	0.066	0.049	0.051	0.044
n8-49	d-Axis Current for High Efficiency Control (OLV/PM)	%	0	0	0	0	0

上正科技有限公司
購買、維修 此手冊零組件
電話： 037-466333
Email: service@repairtw.com
Line id: @zzzz
www.repairtw.com

Table B.11 200 V, 3600 r/min Type YASKAWA SMRA Series SPM Motor

No.	Name	Unit	Default Settings			
E5-01	Motor Code Selection	–	0103	0105	0106	0108
	Voltage Class	V	200	200	200	200
	Rated Power	kW	0.75	1.5	2.2	3.7
	Rated Speed	r/min	3600	3600	3600	3600
E5-02	Motor Rated Power	kW	0.75	1.5	2.2	3.7
E5-03	Motor Rated Current	A	4.1	8.0	10.5	16.5
E5-04	Number of Motor Poles	–	8	8	8	8
E5-05	Motor Stator Resistance (r1)	Ω	0.538	0.20	0.15	0.097
E5-06	Motor d-Axis Inductance (Ld)	mH	3.2	1.3	1.1	1.1
E5-07	Motor q-Axis Inductance (Lq)	mH	3.2	1.3	1.1	1.1
E5-09	Motor Induction Voltage Constant 1 (Ke)	mVs/rad	0	0	0	0
E5-24	Motor Induction Voltage Constant 2 (Ke)	mV/(r/min)	32.4	32.7	36.7	39.7
E1-04	Maximum Output Frequency	Hz	240	240	240	240
E1-05	Maximum Voltage	V	200.0	200.0	200.0	200.0
E1-06	Base Frequency	Hz	240	240	240	240
E1-09	Minimum Output Frequency	Hz	12	12	12	12
C5-17	Motor Inertia	kgm^2	0.0007	0.0014	0.0021	0.0032
L3-24	Motor Acceleration Time for Inertia Calculations	s	0.137	0.132	0.132	0.122
n5-02	Motor Acceleration Time	s	0.137	0.132	0.132	0.122
n8-49	d-Axis Current for High Efficiency Control (OLV/PM)	%	0	0	0	0

◆ YASKAWA SSR1 Series IPM Motor (For Derated Torque)

Table B.12 200 V, 1750 r/min Type YASKAWA SSR1 Series IPM Motor

No.	Name	Unit	Default Settings							
E5-01	Motor Code Selection	–	1202	1203	1205	1206	1208	120A	120B	120D
	Voltage Class	V	200	200	200	200	200	200	200	200
	Rated Power	kW	0.4	0.75	1.5	2.2	3.7	5.5	7.5	11
	Rated Speed	r/min	1750	1750	1750	1750	1750	1750	1750	1750
E5-02	Motor Rated Power	kW	0.4	0.75	1.5	2.2	3.7	5.5	7.5	11.0
E5-03	Motor Rated Current	A	1.77	3.13	5.73	8.44	13.96	20.63	28.13	41.4
E5-04	Number of Motor Poles	–	6	6	6	6	6	6	6	6
E5-05	Motor Stator Resistance (r1)	Ω	8.233	2.284	1.470	0.827	0.455	0.246	0.198	0.094
E5-06	Motor d-Axis Inductance (Ld)	mH	54.84	23.02	17.22	8.61	7.20	4.86	4.15	3.40
E5-07	Motor q-Axis Inductance (Lq)	mH	64.10	29.89	20.41	13.50	10.02	7.43	5.91	3.91
E5-09	Motor Induction Voltage Constant 1 (Ke)	mVs/rad	223.7	220.3	240.8	238.0	238.7	239.6	258.2	239.3
E5-24	Motor Induction Voltage Constant 2 (Ke)	mV/(r/min)	0.0	0.0	0.0	0.0	0.0	0.0	0.0	0.0
E1-04	Maximum Output Frequency	Hz	87.5	87.5	87.5	87.5	87.5	87.5	87.5	87.5
E1-05	Maximum Voltage	V	190.0	190.0	190.0	190.0	190.0	190.0	190.0	190.0
E1-06	Base Frequency	Hz	87.5	87.5	87.5	87.5	87.5	87.5	87.5	87.5
E1-09	Minimum Output Frequency	Hz	4.4	4.4	4.4	4.4	4.4	4.4	4.4	4.4
C5-17	Motor Inertia	kgm²	0.0011	0.0017	0.0023	0.0043	0.0083	0.014	0.017	0.027
L3-24	Motor Acceleration Time for Inertia Calculations	s	0.092	0.076	0.052	0.066	0.075	0.083	0.077	0.084
n5-02	Motor Acceleration Time	s	0.092	0.076	0.052	0.066	0.075	0.083	0.077	0.084
n8-49	d-Axis Current for High Efficiency Control (OLV/PM)	%	-7.6	-11.5	-9.1	-19.0	-18.7	-23.4	-18.5	-10.9

No.	Name	Unit	Default Settings							
E5-01	Motor Code Selection	–	120E	120F	1210	1212	1213	1214	1215	1216
	Voltage Class	V	200	200	200	200	200	200	200	200
	Rated Power	kW	15	18	22	30	37	45	55	75
	Rated Speed	r/min	1750	1750	1750	1750	1750	1750	1750	1750
E5-02	Motor Rated Power	kW	15.00	18.50	22.00	30.00	37.00	45.00	55.00	75.00
E5-03	Motor Rated Current	A	55.4	68.2	80.6	105.2	131.3	153.1	185.4	257.3
E5-04	Number of Motor Poles	–	6	6	6	6	6	6	6	6
E5-05	Motor Stator Resistance (r1)	Ω	0.066	0.051	0.037	0.030	0.020	0.014	0.012	0.006
E5-06	Motor d-Axis Inductance (Ld)	mH	2.45	2.18	1.71	1.35	0.99	0.83	0.79	0.44
E5-07	Motor q-Axis Inductance (Lq)	mH	3.11	2.55	2.05	1.82	1.28	1.01	0.97	0.56
E5-09	Motor Induction Voltage Constant 1 (Ke)	mVs/rad	248.1	253.6	250.0	280.9	264.2	280.4	311.9	268.0
E5-24	Motor Induction Voltage Constant 2 (Ke)	mV/(r/min)	0.0	0.0	0.0	0.0	0.0	0.0	0.0	0.0
E1-04	Maximum Output Frequency	Hz	87.5	87.5	87.5	87.5	87.5	87.5	87.5	87.5
E1-05	Maximum Voltage	V	190.0	190.0	190.0	190.0	190.0	190.0	190.0	190.0
E1-06	Base Frequency	Hz	87.5	87.5	87.5	87.5	87.5	87.5	87.5	87.5
E1-09	Minimum Output Frequency	Hz	4.4	4.4	4.4	4.4	4.4	4.4	4.4	4.4
C5-17	Motor Inertia	kgm²	0.046	0.055	0.064	0.116	0.140	0.259	0.31	0.42
L3-24	Motor Acceleration Time for Inertia Calculations	s	0.102	0.101	0.098	0.130	0.127	0.193	0.191	0.187
n5-02	Motor Acceleration Time	s	0.102	0.101	0.098	0.130	0.127	0.193	0.191	0.187
n8-49	d-Axis Current for High Efficiency Control (OLV/PM)	%	-16.5	-11.3	-12.8	-16.8	-15.6	-10.7	-9.6	-13.3

上正科技有限公司
購買、維修 此手冊零組件
電話: 07-460333
Email: service@repairtw.com
Line id: @zzz
www.repairtw.com

Table B.13 400 V, 1750 r/min Type YASKAWA SSR1 Series IPM Motor

No.	Name	Unit	Default Settings									
E5-01	Motor Code Selection	–	1232	1233	1235	1236	1238	123A	123B	123D	123E	123F
	Voltage Class	V	400	400	400	400	400	400	400	400	400	400
	Rated Power	kW	0.4	0.75	1.5	2.2	3.7	5.5	7.5	11	15	18
	Rated Speed	r/min	1750	1750	1750	1750	1750	1750	1750	1750	1750	1750
E5-02	Motor Rated Power	kW	0.4	0.75	1.5	2.2	3.7	5.5	7.5	11.0	15	18.50
E5-03	Motor Rated Current	A	0.89	1.56	2.81	4.27	7.08	10.31	13.65	20.7	27.5	33.4
E5-04	Number of Motor Poles	–	6	6	6	6	6	6	6	6	6	6
E5-05	Motor Stator Resistance (r1)	Ω	25.370	9.136	6.010	3.297	1.798	0.982	0.786	0.349	0.272	0.207
E5-06	Motor d-Axis Inductance (Ld)	mH	169.00	92.08	67.71	34.40	32.93	22.7	16.49	13.17	10.30	8.72
E5-07	Motor q-Axis Inductance (Lq)	mH	197.50	119.56	81.71	54.00	37.70	26.80	23.46	15.60	12.77	11.22
E5-09	Motor Induction Voltage Constant 1 (Ke)	mVs/rad	392.6	440.6	478.3	466.3	478.8	478.1	520.0	481.5	498.8	509.5
E5-24	Motor Induction Voltage Constant 2 (Ke)	mV/(r/min)	0.0	0.0	0.0	0.0	0.0	0.0	0.0	0.0	0.0	0.0
E1-04	Maximum Output Frequency	Hz	87.5	87.5	87.5	87.5	87.5	87.5	87.5	87.5	87.5	87.5
E1-05	Maximum Voltage	V	380.0	380.0	380.0	380.0	380.0	380.0	380.0	380.0	380.0	380.0
E1-06	Base Frequency	Hz	87.5	87.5	87.5	87.5	87.5	87.5	87.5	87.5	87.5	87.5
E1-09	Minimum Output Frequency	Hz	4.4	4.4	4.4	4.4	4.4	4.4	4.4	4.4	4.4	4.4
C5-17	Motor Inertia	kgm²	0.0011	0.0017	0.0023	0.0043	0.0083	0.014	0.017	0.027	0.046	0.055
L3-24	Motor Acceleration Time for Inertia Calculations	s	0.092	0.076	0.052	0.066	0.075	0.083	0.077	0.084	0.102	0.101
n5-02	Motor Acceleration Time	s	0.092	0.076	0.052	0.066	0.075	0.083	0.077	0.084	0.102	0.101
n8-49	d-Axis Current for High Efficiency Control (OLV/PM)	%	-8.6	-11.5	-10.3	-19.8	-8.5	-11.0	-18.6	-12.5	-15.5	-17.9

No.	Name	Unit	Default Settings									
E5-01	Motor Code Selection	–	1240	1242	1243	1244	1245	1246	1247	1248	1249	124A
	Voltage Class	V	400	400	400	400	400	400	400	400	400	400
	Rated Power	kW	22	30	37	45	55	75	90	110	132	160
	Rated Speed	r/min	1750	1750	1750	1750	1750	1750	1750	1750	1750	1750
E5-02	Motor Rated Power	kW	22.00	30.00	37.00	45.00	55.00	75.00	90.00	110.00	132	160
E5-03	Motor Rated Current	A	39.8	52.0	65.8	77.5	92.7	126.6	160.4	183.3	222.9	267.7
E5-04	Number of Motor Poles	–	6	6	6	6	6	6	6	6	6	6
E5-05	Motor Stator Resistance (r1)	Ω	0.148	0.235	0.079	0.054	0.049	0.029	0.019	0.017	0.012	0.008
E5-06	Motor d-Axis Inductance (Ld)	mH	6.81	5.4	4.08	3.36	3.16	2.12	1.54	1.44	1.21	0.97
E5-07	Motor q-Axis Inductance (Lq)	mH	8.47	7.26	5.12	3.94	3.88	2.61	2.06	2.21	1.46	1.28
E5-09	Motor Induction Voltage Constant 1 (Ke)	mVs/rad	503.9	561.7	528.5	558.1	623.8	594.5	524.1	583.7	563.6	601.2
E5-24	Motor Induction Voltage Constant 2 (Ke)	mV/(r/min)	0.0	0.0	0.0	0.0	0.0	0.0	0.0	0.0	0	0
E1-04	Maximum Output Frequency	Hz	87.5	87.5	87.5	87.5	87.5	87.5	87.5	87.5	87.5	87.5
E1-05	Maximum Voltage	V	380.0	380.0	380.0	380.0	380.0	380.0	380.0	380.0	380	380
E1-06	Base Frequency	Hz	87.5	87.5	87.5	87.5	87.5	87.5	87.5	87.5	87.5	87.5
E1-09	Minimum Output Frequency	Hz	4.4	4.4	4.4	4.4	4.4	4.4	4.4	4.4	4.4	4.4
C5-17	Motor Inertia	kgm²	0.064	0.116	0.140	0.259	0.31	0.42	0.56	0.83	0.96	1.61
L3-24	Motor Acceleration Time for Inertia Calculations	s	0.098	0.130	0.127	0.193	0.191	0.187	0.208	0.254	0.243	0.338
n5-02	Motor Acceleration Time	s	0.098	0.130	0.127	0.193	0.191	0.187	0.208	0.254	0.243	0.338
n8-49	d-Axis Current for High Efficiency Control (OLV/PM)	%	-15.1	-16.8	-14.1	-8.8	-9.6	-10.3	-17.0	-21.7	-10.9	-13.2

上正科技有限公司
購買、維修、此手冊零組件
電話：037-466383
Email: service@repairtw.com
Line id: @zzzz
www.repairtw.com

Table B.14 200 V, 1450 r/min Type YASKAWA SSR1 Series IPM Motor

No.	Name	Unit	Default Settings							
E5-01	Motor Code Selection	–	1302	1303	1305	1306	1308	130A	130B	130D
	Voltage Class	V	200	200	200	200	200	200	200	200
	Rated Power	kW	0.4	0.75	1.5	2.2	3.7	5.5	7.5	11
	Rated Speed	r/min	1450	1450	1450	1450	1450	1450	1450	1450
E5-02	Motor Rated Power	kW	0.4	0.75	1.5	2.2	3.7	5.5	7.5	11.0
E5-03	Motor Rated Current	A	1.88	3.13	5.63	8.33	14.17	20.63	27.71	39.6
E5-04	Number of Motor Poles	–	6	6	6	6	6	6	6	6
E5-05	Motor Stator Resistance (r1)	Ω	3.190	1.940	1.206	0.665	0.341	0.252	0.184	0.099
E5-06	Motor d-Axis Inductance (Ld)	mH	32.15	26.12	14.72	12.27	8.27	6.49	6.91	4.07
E5-07	Motor q-Axis Inductance (Lq)	mH	41.74	34.30	20.15	14.77	9.81	7.74	7.66	4.65
E5-09	Motor Induction Voltage Constant 1 (Ke)	mVs/rad	264.3	269.6	284.3	287.1	284.5	298.0	335.0	303.9
E5-24	Motor Induction Voltage Constant 2 (Ke)	mV/(r/min)	0.0	0.0	0.0	0.0	0.0	0.0	0.0	0.0
E1-04	Maximum Output Frequency	Hz	72.5	72.5	72.5	72.5	72.5	72.5	72.5	72.5
E1-05	Maximum Voltage	V	190.0	190.0	190.0	190.0	190.0	190.0	190.0	190.0
E1-06	Base Frequency	Hz	72.5	72.5	72.5	72.5	72.5	72.5	72.5	72.5
E1-09	Minimum Output Frequency	Hz	3.6	3.6	3.6	3.6	3.6	3.6	3.6	3.6
C5-17	Motor Inertia	kgm²	0.0017	0.0023	0.0043	0.0083	0.0136	0.017	0.027	0.046
L3-24	Motor Acceleration Time for Inertia Calculations	s	0.098	0.071	0.066	0.087	0.085	0.072	0.084	0.096
n5-02	Motor Acceleration Time	s	0.098	0.071	0.066	0.087	0.085	0.072	0.084	0.096
n8-49	d-Axis Current for High Efficiency Control (OLV/PM)	%	-6.6	-10.9	-13.5	-9.0	-9.5	-10.1	-6.0	-9.3

No.	Name	Unit	Default Settings						
E5-01	Motor Code Selection	–	130E	130F	1310	1312	1313	1314	1315
	Voltage Class	V	200	200	200	200	200	200	200
	Rated Power	kW	15	18	22	30	37	45	55
	Rated Speed	r/min	1450	1450	1450	1450	1450	1450	1450
E5-02	Motor Rated Power	kW	15.00	18.50	22.00	30.00	37.00	45.00	55.00
E5-03	Motor Rated Current	A	55.5	65.6	75.1	105.2	126.0	153.1	186.5
E5-04	Number of Motor Poles	–	6	6	6	6	6	6	6
E5-05	Motor Stator Resistance (r1)	Ω	0.075	0.057	0.041	0.034	0.023	0.015	0.012
E5-06	Motor d-Axis Inductance (Ld)	mH	3.29	2.53	1.98	1.75	1.48	1.04	0.87
E5-07	Motor q-Axis Inductance (Lq)	mH	3.84	3.01	2.60	2.17	1.70	1.31	1.10
E5-09	Motor Induction Voltage Constant 1 (Ke)	mVs/rad	311.2	300.9	327.7	354.2	369.6	351.6	374.7
E5-24	Motor Induction Voltage Constant 2 (Ke)	mV/(r/min)	0.0	0.0	0.0	0.0	0.0	0.0	0.0
E1-04	Maximum Output Frequency	Hz	72.5	72.5	72.5	72.5	72.5	72.5	72.5
E1-05	Maximum Voltage	V	190.0	190.0	190.0	190.0	190.0	190.0	190.0
E1-06	Base Frequency	Hz	72.5	72.5	72.5	72.5	72.5	72.5	72.5
E1-09	Minimum Output Frequency	Hz	3.6	3.6	3.6	3.6	3.6	3.6	3.6
C5-17	Motor Inertia	kgm²	0.055	0.064	0.116	0.140	0.259	0.312	0.42
L3-24	Motor Acceleration Time for Inertia Calculations	s	0.085	0.080	0.122	0.108	0.161	0.160	0.175
n5-02	Motor Acceleration Time	s	0.085	0.080	0.122	0.108	0.161	0.160	0.175
n8-49	d-Axis Current for High Efficiency Control (OLV/PM)	%	-10.7	-13.2	-15.7	-11.5	-7.0	-11.8	-10.2

上正科技有限公司
購買、維修此手冊零組件
電話：037-466333
Email: service@repairtw.com
Line id: @xxz
www.repairtw.com

Table B.15 400 V, 1450 r/min Type YASKAWA SSR1 Series IPM Motor

No.	Name	Unit	Default Settings									
E5-01	Motor Code Selection	–	1332	1333	1335	1336	1338	133A	133B	133D	133E	133F
	Voltage Class	V	400	400	400	400	400	400	400	400	400	400
	Rated Power	kW	0.4	0.75	1.5	2.2	3.7	5.5	7.5	11	15	18
	Rated Speed	r/min	1450	1450	1450	1450	1450	1450	1450	1450	1450	1450
E5-02	Motor Rated Power	kW	0.4	0.75	1.5	2.2	3.7	5.5	7.5	11.0	15	18.50
E5-03	Motor Rated Current	A	0.94	1.56	2.81	4.27	6.98	10.21	13.85	19.5	27.4	32.9
E5-04	Number of Motor Poles	–	6	6	6	6	6	6	6	6	6	6
E5-05	Motor Stator Resistance (r1)	Ω	12.760	7.421	4.825	2.656	1.353	0.999	0.713	0.393	0.295	0.223
E5-06	Motor d-Axis Inductance (Ld)	mH	128.60	85.11	58.87	46.42	31.73	26.20	27.06	15.51	12.65	9.87
E5-07	Motor q-Axis Inductance (Lq)	mH	166.96	113.19	80.59	60.32	40.45	30.94	33.45	19.63	15.87	12.40
E5-09	Motor Induction Voltage Constant 1 (Ke)	mVs/rad	528.6	544.2	568.5	572.8	562.9	587.6	670.1	612.7	624.6	610.4
E5-24	Motor Induction Voltage Constant 2 (Ke)	mV/(r/min)	0.0	0.0	0.0	0.0	0.0	0.0	0.0	0.0	0.0	0.0
E1-04	Maximum Output Frequency	Hz	72.5	72.5	72.5	72.5	72.5	72.5	72.5	72.5	72.5	72.5
E1-05	Maximum Voltage	V	380.0	380.0	380.0	380.0	380.0	380.0	380.0	380.0	380.0	380.0
E1-06	Base Frequency	Hz	72.5	72.5	72.5	72.5	72.5	72.5	72.5	72.5	72.5	72.5
E1-09	Minimum Output Frequency	Hz	3.6	3.6	3.6	3.6	3.6	3.6	3.6	3.6	3.6	3.6
C5-17	Motor Inertia	kgm²	0.0017	0.0023	0.0043	0.0083	0.0136	0.017	0.027	0.046	0.055	0.064
L3-24	Motor Acceleration Time for Inertia Calculations	s	0.098	0.071	0.066	0.087	0.085	0.072	0.084	0.096	0.085	0.080
n5-02	Motor Acceleration Time	s	0.098	0.071	0.066	0.087	0.085	0.072	0.084	0.096	0.085	0.080
n8-49	d-Axis Current for High Efficiency Control (OLV/PM)	%	-6.6	-9.2	-13.5	-12.1	-13.7	-10.1	-12.2	-15.5	-15.1	-16.0

No.	Name	Unit	Default Settings								
E5-01	Motor Code Selection	–	1340	1342	1343	1344	1345	1346	1347	1348	1349
	Voltage Class	V	400	400	400	400	400	400	400	400	400
	Rated Power	kW	22	30	37	45	55	75	90	110	132
	Rated Speed	r/min	1450	1450	1450	1450	1450	1450	1450	1450	1450
E5-02	Motor Rated Power	kW	22.00	30.00	37.00	45.00	55.00	75.00	90.00	110.00	132.00
E5-03	Motor Rated Current	A	37.6	52.5	63.2	76.4	96.1	124.0	153.1	186.5	226.0
E5-04	Number of Motor Poles	–	6	6	6	6	6	6	6	6	6
E5-05	Motor Stator Resistance (r1)	Ω	0.164	0.137	0.093	0.059	0.048	0.028	0.024	0.015	0.011
E5-06	Motor d-Axis Inductance (Ld)	mH	7.90	7.01	5.93	4.17	3.11	2.32	2.20	1.45	1.23
E5-07	Motor q-Axis Inductance (Lq)	mH	10.38	8.68	6.79	5.22	4.55	2.97	3.23	1.88	1.67
E5-09	Motor Induction Voltage Constant 1 (Ke)	mVs/rad	655.4	708.4	739.2	703.0	747.1	639.3	708.0	640.7	677.0
E5-24	Motor Induction Voltage Constant 2 (Ke)	mV/(r/min)	0.0	0.0	0.0	0.0	0.0	0.0	0.0	0.0	0.0
E1-04	Maximum Output Frequency	Hz	72.5	72.5	72.5	72.5	72.5	72.5	72.5	72.5	72.5
E1-05	Maximum Voltage	V	380.0	380.0	380.0	380.0	380.0	380.0	380.0	380.0	380.0
E1-06	Base Frequency	Hz	72.5	72.5	72.5	72.5	72.5	72.5	72.5	72.5	72.5
E1-09	Minimum Output Frequency	Hz	3.6	3.6	3.6	3.6	3.6	3.6	3.6	3.6	3.6
C5-17	Motor Inertia	kgm²	0.116	0.140	0.259	0.312	0.42	0.56	0.83	0.96	1.61
L3-24	Motor Acceleration Time for Inertia Calculations	s	0.122	0.108	0.161	0.160	0.175	0.171	0.213	0.201	0.281
n5-02	Motor Acceleration Time	s	0.122	0.108	0.161	0.160	0.175	0.171	0.213	0.201	0.281
n8-49	d-Axis Current for High Efficiency Control (OLV/PM)	%	-15.7	-11.5	-6.8	-11.5	-14.8	-15.8	-19.6	-14.9	-15.1

上正科技有限公司
購買 維修 此手冊零組件
電話: 037-466333
Email: service@repairtw.com
Line id: @szzt
www.repairtw.com

Table B.16 200 V, 1150 r/min Type YASKAWA SSR1 Series IPM Motor

No.	Name	Unit	Default Settings						
E5-01	Motor Code Selection	–	1402	1403	1405	1406	1408	140A	140B
	Voltage Class	V	200	200	200	200	200	200	200
	Rated Power	kW	0.4	0.75	1.5	2.2	3.7	5.5	7.5
	Rated Speed	r/min	1150	1150	1150	1150	1150	1150	1150
E5-02	Motor Rated Power	kW	0.4	0.75	1.5	2.2	3.7	5.5	7.5
E5-03	Motor Rated Current	A	1.88	3.02	6.00	8.85	14.27	20.21	26.67
E5-04	Number of Motor Poles	–	6	6	6	6	6	6	6
E5-05	Motor Stator Resistance (r1)	Ω	4.832	2.704	1.114	0.511	0.412	0.303	0.165
E5-06	Motor d-Axis Inductance (Ld)	mH	48.68	32.31	19.22	12.15	7.94	11.13	6.59
E5-07	Motor q-Axis Inductance (Lq)	mH	63.21	40.24	24.38	15.35	11.86	14.06	8.55
E5-09	Motor Induction Voltage Constant 1 (Ke)	mVs/rad	320.4	327.1	364.4	344.4	357.5	430.8	391.5
E5-24	Motor Induction Voltage Constant 2 (Ke)	mV/(r/min)	0.0	0.0	0.0	0.0	0.0	0.0	0.0
E1-04	Maximum Output Frequency	Hz	57.5	57.5	57.5	57.5	57.5	57.5	57.5
E1-05	Maximum Voltage	V	190.0	190.0	190.0	190.0	190.0	190.0	190.0
E1-06	Base Frequency	Hz	57.5	57.5	57.5	57.5	57.5	57.5	57.5
E1-09	Minimum Output Frequency	Hz	2.9	2.9	2.9	2.9	2.9	2.9	2.9
C5-17	Motor Inertia	kgm²	0.0017	0.0023	0.0083	0.0136	0.0171	0.027	0.046
L3-24	Motor Acceleration Time for Inertia Calculations	s	0.062	0.044	0.080	0.090	0.067	0.072	0.088
n5-02	Motor Acceleration Time	s	0.062	0.044	0.080	0.090	0.067	0.072	0.088
n8-49	d-Axis Current for High Efficiency Control (OLV/PM)	%	-8.8	-9.9	-9.3	-10.0	-17.7	-12.3	-15.3

No.	Name	Unit	Default Settings						
E5-01	Motor Code Selection	–	140D	140E	140F	1410	1412	1413	1414
	Voltage Class	V	200	200	200	200	200	200	200
	Rated Power	kW	11	15	18	22	30	37	45
	Rated Speed	r/min	1150	1150	1150	1150	1150	1150	1150
E5-02	Motor Rated Power	kW	11.0	15	18.50	22.00	30.00	37.00	45.00
E5-03	Motor Rated Current	A	39.9	55.6	63.5	74.4	104.2	129.6	154.2
E5-04	Number of Motor Poles	–	6	6	6	6	6	6	6
E5-05	Motor Stator Resistance (r1)	Ω	0.113	0.084	0.066	0.048	0.035	0.023	0.016
E5-06	Motor d-Axis Inductance (Ld)	mH	4.96	3.83	3.33	2.38	2.04	1.53	1.16
E5-07	Motor q-Axis Inductance (Lq)	mH	6.12	4.65	4.50	3.15	2.86	2.27	1.54
E5-09	Motor Induction Voltage Constant 1 (Ke)	mVs/rad	384.4	372.1	421.3	410.9	436.1	428.8	433.3
E5-24	Motor Induction Voltage Constant 2 (Ke)	mV/(r/min)	0.0	0.0	0.0	0.0	0.0	0.0	0.0
E1-04	Maximum Output Frequency	Hz	57.5	57.5	57.5	57.5	57.5	57.5	57.5
E1-05	Maximum Voltage	V	190.0	190.0	190.0	190.0	190.0	190.0	190.0
E1-06	Base Frequency	Hz	57.5	57.5	57.5	57.5	57.5	57.5	57.5
E1-09	Minimum Output Frequency	Hz	2.9	2.9	2.9	2.9	2.9	2.9	2.9
C5-17	Motor Inertia	kgm²	0.055	0.064	0.116	0.140	0.259	0.312	0.418
L3-24	Motor Acceleration Time for Inertia Calculations	s	0.073	0.062	0.091	0.092	0.125	0.122	0.135
n5-02	Motor Acceleration Time	s	0.073	0.062	0.091	0.092	0.125	0.122	0.135
n8-49	d-Axis Current for High Efficiency Control (OLV/PM)	%	-13.9	-14.4	-17.9	-15.9	-17.9	-20.1	-13.7

上正科技有限公司
購買、維修此手冊零組件
電話：037-466333
Email: service@repairtw.com
Line id: @zzz
www.repairtw.com

Table B.17 400 V, 1150 r/min Type YASKAWA SSR1 Series IPM Motor

No.	Name	Unit	Default Settings								
E5-01	Motor Code Selection	–	1432	1433	1435	1436	1438	143A	143B	143D	143E
	Voltage Class	V	400	400	400	400	400	400	400	400	400
	Rated Power	kW	0.4	0.75	1.5	2.2	3.7	5.5	7.5	11	15
	Rated Speed	r/min	1150	1150	1150	1150	1150	1150	1150	1150	1150
E5-02	Motor Rated Power	kW	0.4	0.75	1.5	2.2	3.7	5.5	7.5	11.0	15
E5-03	Motor Rated Current	A	0.94	1.51	3.00	4.43	7.08	10.10	13.33	19.9	27.8
E5-04	Number of Motor Poles	–	6	6	6	6	6	6	6	6	6
E5-05	Motor Stator Resistance (r1)	Ω	19.320	10.800	4.456	2.044	1.483	1.215	0.660	0.443	0.331
E5-06	Motor d-Axis Inductance (Ld)	mH	194.70	129.20	76.88	48.60	37.58	44.54	26.36	19.10	15.09
E5-07	Motor q-Axis Inductance (Lq)	mH	252.84	160.90	97.52	61.40	47.65	56.26	34.20	24.67	18.56
E5-09	Motor Induction Voltage Constant 1 (Ke)	mVs/rad	640.9	654.1	728.8	688.9	702.0	861.5	783.0	762.2	749.6
E5-24	Motor Induction Voltage Constant 2 (Ke)	mV/(r/min)	0.0	0.0	0.0	0.0	0.0	0.0	0.0	0.0	0.0
E1-04	Maximum Output Frequency	Hz	57.5	57.5	57.5	57.5	57.5	57.5	57.5	57.5	57.5
E1-05	Maximum Voltage	V	380.0	380.0	380.0	380.0	380.0	380.0	380.0	380.0	380.0
E1-06	Base Frequency	Hz	57.5	57.5	57.5	57.5	57.5	57.5	57.5	57.5	57.5
E1-09	Minimum Output Frequency	Hz	2.9	2.9	2.9	2.9	2.9	2.9	2.9	2.9	2.9
C5-17	Motor Inertia	kgm²	0.0017	0.0023	0.0083	0.0136	0.0171	0.027	0.046	0.055	0.064
L3-24	Motor Acceleration Time for Inertia Calculations	s	0.062	0.044	0.080	0.090	0.067	0.072	0.088	0.073	0.062
n5-02	Motor Acceleration Time	s	0.062	0.044	0.080	0.090	0.067	0.072	0.088	0.073	0.062
n8-49	d-Axis Current for High Efficiency Control (OLV/PM)	%	-8.8	-9.9	-9.3	-10.0	-12.8	-12.3	-15.3	-16.7	-14.9

No.	Name	Unit	Default Settings								
E5-01	Motor Code Selection	–	143F	1440	1442	1443	1444	1445	1446	1447	1448
	Voltage Class	V	400	400	400	400	400	400	400	400	400
	Rated Power	kW	18	22	30	37	45	55	75	90	110
	Rated Speed	r/min	1150	1150	1150	1150	1150	1150	1150	1150	1150
E5-02	Motor Rated Power	kW	18.50	22.00	30.00	37.00	45.00	55.00	75.00	90.00	110.00
E5-03	Motor Rated Current	A	31.8	37.2	52.1	64.8	76.6	92.0	127.1	150.5	185.4
E5-04	Number of Motor Poles	–	6	6	6	6	6	6	6	6	6
E5-05	Motor Stator Resistance (r1)	Ω	0.264	0.192	0.140	0.093	0.063	0.051	0.033	0.027	0.015
E5-06	Motor d-Axis Inductance (Ld)	mH	13.32	9.52	8.16	6.13	4.63	3.96	3.03	2.60	1.89
E5-07	Motor q-Axis Inductance (Lq)	mH	18.00	12.60	11.40	9.10	6.15	5.00	5.14	3.28	2.33
E5-09	Motor Induction Voltage Constant 1 (Ke)	mVs/rad	842.7	821.8	872.3	857.7	866.6	854.0	823.1	853.4	829.2
E5-24	Motor Induction Voltage Constant 2 (Ke)	mV/(r/min)	0.0	0.0	0.0	0.0	0.0	0.0	0.0	0.0	0.0
E1-04	Maximum Output Frequency	Hz	57.5	57.5	57.5	57.5	57.5	57.5	57.5	57.5	57.5
E1-05	Maximum Voltage	V	380.0	380.0	380.0	380.0	380.0	380.0	380.0	380.0	380.0
E1-06	Base Frequency	Hz	57.5	57.5	57.5	57.5	57.5	57.5	57.5	57.5	57.5
E1-09	Minimum Output Frequency	Hz	2.9	2.9	2.9	2.9	2.9	2.9	2.9	2.9	2.9
C5-17	Motor Inertia	kgm²	0.116	0.140	0.259	0.312	0.418	0.56	0.83	0.96	1.61
L3-24	Motor Acceleration Time for Inertia Calculations	s	0.091	0.092	0.125	0.122	0.135	0.147	0.161	0.154	0.212
n5-02	Motor Acceleration Time	s	0.091	0.092	0.125	0.122	0.135	0.147	0.161	0.154	0.212
n8-49	d-Axis Current for High Efficiency Control (OLV/PM)	%	-17.9	-15.9	-17.7	-20.1	-13.8	-12.5	-28.8	-13.3	-11.6

上正科技有限公司
購買、維修此手冊零組件
電話: 037-466333
Email: service@repairtw.com
Line ID: @zzz
www.repairtw.com

◆ YASKAWA SST4 Series IPM Motor (For Constant Torque)

Table B.18 200 V, 1750 r/min Type YASKAWA SST4 Series IPM Motor

No.	Name	Unit	Default Settings							
E5-01	Motor Code Selection	–	2202	2203	2205	2206	2208	220A	220B	220D
	Voltage Class	V	200	200	200	200	200	200	200	200
	Rated Power	kW	0.4	0.75	1.5	2.2	3.7	5.5	7.5	11
	Rated Speed	r/min	1750	1750	1750	1750	1750	1750	1750	1750
E5-02	Motor Rated Power	kW	0.4	0.75	1.5	2.2	3.7	5.5	7.5	11.0
E5-03	Motor Rated Current	A	1.77	3.54	6.56	8.96	14.79	20.94	29.58	41.1
E5-04	Number of Motor Poles	–	6	6	6	6	6	6	6	6
E5-05	Motor Stator Resistance (r1)	Ω	2.247	1.132	0.774	0.479	0.242	0.275	0.161	0.111
E5-06	Motor d-Axis Inductance (Ld)	mH	22.32	12.38	8.90	7.39	5.06	5.82	3.86	3.59
E5-07	Motor q-Axis Inductance (Lq)	mH	32.50	15.72	11.96	9.63	6.42	6.74	4.66	4.32
E5-09	Motor Induction Voltage Constant 1 (Ke)	mVs/rad	215.2	203.9	219.3	230.6	235.1	251.7	235.7	252.0
E5-24	Motor Induction Voltage Constant 2 (Ke)	mV/(r/min)	0.0	0.0	0.0	0.0	0.0	0.0	0.0	0.0
E1-04	Maximum Output Frequency	Hz	87.5	87.5	87.5	87.5	87.5	87.5	87.5	87.5
E1-05	Maximum Voltage	V	190.0	190.0	190.0	190.0	190.0	190.0	190.0	190.0
E1-06	Base Frequency	Hz	87.5	87.5	87.5	87.5	87.5	87.5	87.5	87.5
E1-09	Minimum Output Frequency	Hz	4.4	4.4	4.4	4.4	4.4	4.4	4.4	4.4
C5-17	Motor Inertia	kgm²	0.0016	0.0022	0.0042	0.0081	0.0133	0.013	0.017	0.027
L3-24	Motor Acceleration Time for Inertia Calculations	s	0.134	0.099	0.094	0.124	0.121	0.081	0.075	0.082
n5-02	Motor Acceleration Time	s	0.134	0.099	0.094	0.124	0.121	0.081	0.075	0.082
n8-49	d-Axis Current for High Efficiency Control (OLV/PM)	%	-9.3	-6.4	-10.0	-9.9	-9.7	-8.4	-11.5	-13.1

No.	Name	Unit	Default Settings							
E5-01	Motor Code Selection	–	220E	220F	2210	2212	2213	2214	2215	2216
	Voltage Class	V	200	200	200	200	200	200	200	200
	Rated Power	kW	15	18	22	30	37	45	55	75
	Rated Speed	r/min	1750	1750	1750	1750	1750	1750	1750	1750
E5-02	Motor Rated Power	kW	15	18.50	22.00	30.00	37.00	45.00	55.00	75.00
E5-03	Motor Rated Current	A	54.2	68.2	78.6	104.2	129.2	153.1	205.2	260.4
E5-04	Number of Motor Poles	–	6	6	6	6	6	6	6	6
E5-05	Motor Stator Resistance (r1)	Ω	0.071	0.049	0.040	0.030	0.020	0.013	0.009	0.006
E5-06	Motor d-Axis Inductance (Ld)	mH	2.67	1.98	1.69	1.31	0.88	0.77	0.55	0.40
E5-07	Motor q-Axis Inductance (Lq)	mH	3.10	2.41	2.12	1.61	1.14	1.04	0.69	0.50
E5-09	Motor Induction Voltage Constant 1 (Ke)	mVs/rad	253.7	244.6	256.3	283.1	266.3	260.0	261.5	259.3
E5-24	Motor Induction Voltage Constant 2 (Ke)	mV/(r/min)	0.0	0.0	0.0	0.0	0.0	0.0	0.0	0.0
E1-04	Maximum Output Frequency	Hz	87.5	87.5	87.5	87.5	87.5	87.5	87.5	87.5
E1-05	Maximum Voltage	V	190.0	190.0	190.0	190.0	190.0	190.0	190.0	190.0
E1-06	Base Frequency	Hz	87.5	87.5	87.5	87.5	87.5	87.5	87.5	87.5
E1-09	Minimum Output Frequency	Hz	4.4	4.4	4.4	4.4	4.4	4.4	4.4	4.4
C5-17	Motor Inertia	kgm²	0.044	0.054	0.063	0.113	0.137	0.252	0.30	0.41
L3-24	Motor Acceleration Time for Inertia Calculations	s	0.099	0.098	0.096	0.127	0.124	0.188	0.186	0.184
n5-02	Motor Acceleration Time	s	0.099	0.098	0.096	0.127	0.124	0.188	0.186	0.184
n8-49	d-Axis Current for High Efficiency Control (OLV/PM)	%	-10.9	-14.3	-15.1	-11.3	-14.1	-18.8	-11.4	-12.2

手正科技有限公司
購買、維修 此手冊零組件
電話： 07-460393
Email: service@repairtw.com
Line id: @zzz
www.repairtw.com

Table B.19 400 V, 1750 r/min Type YASKAWA SST4 Series IPM Motor

No.	Name	Unit	Default Settings							
E5-01	Motor Code Selection	–	2232	2233	2235	2236	2238	223A	223B	223D
	Voltage Class	V	400	400	400	400	400	400	400	400
	Rated Power	kW	0.4	0.75	1.5	2.2	3.7	5.5	7.5	11
	Rated Speed	r/min	1750	1750	1750	1750	1750	1750	1750	1750
E5-02	Motor Rated Power	kW	0.4	0.75	1.5	2.2	3.7	5.5	7.5	11.0
E5-03	Motor Rated Current	A	0.92	1.77	3.33	4.48	7.50	10.42	14.27	20.5
E5-04	Number of Motor Poles	–	6	6	6	6	6	6	6	6
E5-05	Motor Stator Resistance (r1)	Ω	8.935	4.570	3.096	1.906	0.972	1.103	0.630	0.429
E5-06	Motor d-Axis Inductance (Ld)	mH	80.14	48.04	35.60	30.31	20.03	23.41	14.86	14.34
E5-07	Motor q-Axis Inductance (Lq)	mH	110.76	64.88	47.84	38.36	24.97	28.70	17.25	17.25
E5-09	Motor Induction Voltage Constant 1 (Ke)	mVs/rad	416.5	399.4	438.5	475.5	463.7	485.8	470.4	513.4
E5-24	Motor Induction Voltage Constant 2 (Ke)	mV/(r/min)	0.0	0.0	0.0	0.0	0.0	0.0	0.0	0.0
E1-04	Maximum Output Frequency	Hz	87.5	87.5	87.5	87.5	87.5	87.5	87.5	87.5
E1-05	Maximum Voltage	V	380.0	380.0	380.0	380.0	380.0	380.0	380.0	380.0
E1-06	Base Frequency	Hz	87.5	87.5	87.5	87.5	87.5	87.5	87.5	87.5
E1-09	Minimum Output Frequency	Hz	4.4	4.4	4.4	4.4	4.4	4.4	4.4	4.4
C5-17	Motor Inertia	kgm²	0.0016	0.0022	0.0042	0.0081	0.0133	0.013	0.017	0.027
L3-24	Motor Acceleration Time for Inertia Calculations	s	0.134	0.099	0.094	0.124	0.121	0.081	0.075	0.082
n5-02	Motor Acceleration Time	s	0.134	0.099	0.094	0.124	0.121	0.081	0.075	0.082
n8-49	d-Axis Current for High Efficiency Control (OLV/PM)	%	-7.5	-8.5	-9.8	-8.2	-9.1	-13.1	-9.2	-12.4

No.	Name	Unit	Default Settings							
E5-01	Motor Code Selection	–	223E	223F	2240	2242	2243	2244	2245	2246
	Voltage Class	V	400	400	400	400	400	400	400	400
	Rated Power	kW	15	18	22	30	37	45	55	75
	Rated Speed	r/min	1750	1750	1750	1750	1750	1750	1750	1750
E5-02	Motor Rated Power	kW	15	18.50	22.00	30.00	37.00	45.00	55.00	75.00
E5-03	Motor Rated Current	A	26.4	34.2	38.8	52.2	65.4	77.6	99.3	130.2
E5-04	Number of Motor Poles	–	6	6	6	6	6	6	6	6
E5-05	Motor Stator Resistance (r1)	Ω	0.275	0.196	0.160	0.120	0.077	0.052	0.036	0.023
E5-06	Motor d-Axis Inductance (Ld)	mH	9.99	7.92	6.82	5.24	3.57	2.98	1.59	1.59
E5-07	Motor q-Axis Inductance (Lq)	mH	12.37	9.64	8.51	6.44	4.65	3.75	2.78	1.97
E5-09	Motor Induction Voltage Constant 1 (Ke)	mVs/rad	505.3	489.2	509.5	566.2	531.6	530.6	515.2	515.2
E5-24	Motor Induction Voltage Constant 2 (Ke)	mV/(r/min)	0.0	0.0	0.0	0.0	0.0	0.0	0.0	0.0
E1-04	Maximum Output Frequency	Hz	87.5	87.5	87.5	87.5	87.5	87.5	87.5	87.5
E1-05	Maximum Voltage	V	380.0	380.0	380.0	380.0	380.0	380.0	380.0	380.0
E1-06	Base Frequency	Hz	87.5	87.5	87.5	87.5	87.5	87.5	87.5	87.5
E1-09	Minimum Output Frequency	Hz	4.4	4.4	4.4	4.4	4.4	4.4	4.4	4.4
C5-17	Motor Inertia	kgm²	0.044	0.054	0.063	0.113	0.137	0.252	0.30	0.41
L3-24	Motor Acceleration Time for Inertia Calculations	s	0.099	0.098	0.096	0.127	0.124	0.188	0.186	0.184
n5-02	Motor Acceleration Time	s	0.099	0.098	0.096	0.127	0.124	0.188	0.186	0.184
n8-49	d-Axis Current for High Efficiency Control (OLV/PM)	%	-15.1	-14.3	-15.3	-11.3	-14.5	-13.2	-22.6	-11.9

上正科技有限公司
購買 維修 此手冊零組件
電話：037-466333
Email：service@repairtw.com
Line id：@zzz
www.repairtw.com

No.	Name	Unit	Default Settings						
E5-01	Motor Code Selection	–	2247	2248	2249	224A	224C	224D	224E
	Voltage Class	V	400	400	400	400	400	400	400
	Rated Power	kW	90	110	132	160	200	220	300
	Rated Speed	r/min	1750	1750	1750	1750	1750	1750	1750
E5-02	Motor Rated Power	kW	90.00	110.00	132.00	160.00	200.00	250.00	300.00
E5-03	Motor Rated Current	A	153.1	184.4	229.2	269.8	346.9	421.9	520.8
E5-04	Number of Motor Poles	–	6	6	6	6	6	6	6
E5-05	Motor Stator Resistance (r1)	Ω	0.019	0.017	0.012	0.008	0.005	0.004	0.002
E5-06	Motor d-Axis Inductance (Ld)	mH	1.51	1.43	1.13	0.96	0.65	0.67	0.40
E5-07	Motor q-Axis Inductance (Lq)	mH	1.76	1.92	1.54	1.26	0.88	0.74	0.52
E5-09	Motor Induction Voltage Constant 1 (Ke)	mVs/rad	538.3	590.9	548.2	603.9	556.8	593.1	495.4
E5-24	Motor Induction Voltage Constant 2 (Ke)	mV/(r/min)	0.0	0.0	0.0	0.0	0.0	0.0	0.0
E1-04	Maximum Output Frequency	Hz	87.5	87.5	87.5	87.5	87.5	87.5	87.5
E1-05	Maximum Voltage	V	380.0	380.0	380.0	380.0	380.0	380.0	380.0
E1-06	Base Frequency	Hz	87.5	87.5	87.5	87.5	87.5	87.5	87.5
E1-09	Minimum Output Frequency	Hz	4.4	4.4	4.4	4.4	4.4	4.4	4.4
C5-17	Motor Inertia	kgm²	0.55	0.82	0.96	1.60	1.95	2.82	3.70
L3-24	Motor Acceleration Time for Inertia Calculations	s	0.205	0.250	0.244	0.336	0.327	0.379	0.414
n5-02	Motor Acceleration Time	s	0.205	0.250	0.244	0.336	0.327	0.379	0.414
n8-49	d-Axis Current for High Efficiency Control (OLV/PM)	%	-8.6	-14.8	-17.5	-12.5	-14.7	-5.1	-16.3

Table B.20 200 V, 1450 r/min Type YASKAWA SST4 Series IPM Motor

No.	Name	Unit	Default Settings							
E5-01	Motor Code Selection	–	2302	2303	2305	2306	2308	230A	230B	230D
	Voltage Class	V	200	200	200	200	200	200	200	200
	Rated Power	kW	0.4	0.75	1.5	2.2	3.7	5.5	7.5	11
	Rated Speed	r/min	1450	1450	1450	1450	1450	1450	1450	1450
E5-02	Motor Rated Power	kW	0.4	0.75	1.5	2.2	3.7	5.5	7.5	11.0
E5-03	Motor Rated Current	A	1.77	3.33	5.94	9.48	14.17	20.42	27.92	39.6
E5-04	Number of Motor Poles	–	6	6	6	6	6	6	6	6
E5-05	Motor Stator Resistance (r1)	Ω	3.154	1.835	0.681	0.308	0.405	0.278	0.180	0.098
E5-06	Motor d-Axis Inductance (Ld)	mH	28.46	19.46	10.00	6.88	8.15	5.77	6.32	3.34
E5-07	Motor q-Axis Inductance (Lq)	mH	39.29	25.89	15.20	9.25	10.76	8.60	8.80	4.61
E5-09	Motor Induction Voltage Constant 1 (Ke)	mVs/rad	268.8	256.9	271.9	260.2	286.8	314.9	300.8	292.3
E5-24	Motor Induction Voltage Constant 2 (Ke)	mV/(r/min)	0.0	0.0	0.0	0.0	0.0	0.0	0.0	0.0
E1-04	Maximum Output Frequency	Hz	72.5	72.5	72.5	72.5	72.5	72.5	72.5	72.5
E1-05	Maximum Voltage	V	190.0	190.0	190.0	190.0	190.0	190.0	190.0	190.0
E1-06	Base Frequency	Hz	72.5	72.5	72.5	72.5	72.5	72.5	72.5	72.5
E1-09	Minimum Output Frequency	Hz	3.6	3.6	3.6	3.6	3.6	3.6	3.6	3.6
C5-17	Motor Inertia	kgm²	0.0016	0.0022	0.0081	0.0133	0.0133	0.017	0.027	0.044
L3-24	Motor Acceleration Time for Inertia Calculations	s	0.092	0.068	0.125	0.139	0.083	0.070	0.082	0.092
n5-02	Motor Acceleration Time	s	0.092	0.068	0.125	0.139	0.083	0.070	0.082	0.092
n8-49	d-Axis Current for High Efficiency Control (OLV/PM)	%	-7.5	-9.4	-13.9	-10.0	-15.0	-17.9	-22.7	-20.5

上正科技有限公司
購買、維修此手冊零組件
電話： 057-466333
Email: service@repairtw.com
Line id: @zzz
www.repairtw.com

No.	Name	Unit	Default Settings							
E5-01	Motor Code Selection	–	230E	230F	2310	2312	2313	2314	2315	2316
	Voltage Class	V	200	200	200	200	200	200	200	200
	Rated Power	kW	15	18	22	30	37	45	55	75
	Rated Speed	r/min	1450	1450	1450	1450	1450	1450	1450	1450
E5-02	Motor Rated Power	kW	15.0	18.50	22.00	30.00	37.00	45.00	55.00	75.00
E5-03	Motor Rated Current	A	54.2	68.3	75.2	102.0	131.3	160.4	191.7	257.3
E5-04	Number of Motor Poles	–	6	6	6	6	6	6	6	6
E5-05	Motor Stator Resistance (r1)	Ω	0.073	0.055	0.048	0.034	0.023	0.016	0.012	0.007
E5-06	Motor d-Axis Inductance (Ld)	mH	2.94	2.23	2.08	1.67	1.39	0.94	0.82	0.56
E5-07	Motor q-Axis Inductance (Lq)	mH	3.65	2.85	2.66	2.04	1.73	1.22	1.06	0.76
E5-09	Motor Induction Voltage Constant 1 (Ke)	mVs/rad	305.1	297.6	355.8	355.4	324.0	302.4	337.2	323.4
E5-24	Motor Induction Voltage Constant 2 (Ke)	mV/(r/min)	0.0	0.0	0.0	0.0	0.0	0.0	0.0	0.0
E1-04	Maximum Output Frequency	Hz	72.5	72.5	72.5	72.5	72.5	72.5	72.5	72.5
E1-05	Maximum Voltage	V	190.0	190.0	190.0	190.0	190.0	190.0	190.0	190.0
E1-06	Base Frequency	Hz	72.5	72.5	72.5	72.5	72.5	72.5	72.5	72.5
E1-09	Minimum Output Frequency	Hz	3.6	3.6	3.6	3.6	3.6	3.6	3.6	3.6
C5-17	Motor Inertia	kgm²	0.054	0.063	0.113	0.137	0.252	0.304	0.41	0.55
L3-24	Motor Acceleration Time for Inertia Calculations	s	0.083	0.079	0.118	0.105	0.157	0.156	0.172	0.169
n5-02	Motor Acceleration Time	s	0.083	0.079	0.118	0.105	0.157	0.156	0.172	0.169
n8-49	d-Axis Current for High Efficiency Control (OLV/PM)	%	-14.6	-16.4	-11.8	-10.5	-14.5	-17.4	-13.9	-17.5

Table B.21 400 V, 1450 r/min Type YASKAWA SST4 Series IPM Motor

No.	Name	Unit	Default Settings										
E5-01	Motor Code Selection	–	2332	2333	2335	2336	2338	233A	233B	233D	233E	233F	2340
	Voltage Class	V	400	400	400	400	400	400	400	400	400	400	400
	Rated Power	kW	0.4	0.75	1.5	2.2	3.7	5.5	7.5	11	15	18	22
	Rated Speed	r/min	1450	1450	1450	1450	1450	1450	1450	1450	1450	1450	1450
E5-02	Motor Rated Power	kW	0.4	0.75	1.5	2.2	3.7	5.5	7.5	11.0	15	18.50	22.00
E5-03	Motor Rated Current	A	0.91	1.67	3.02	4.74	7.08	10.21	13.96	20.5	27.1	34.2	37.6
E5-04	Number of Motor Poles	–	6	6	6	6	6	6	6	6	6	6	6
E5-05	Motor Stator Resistance (r1)	Ω	12.616	7.340	2.724	1.232	1.509	1.112	0.720	0.393	0.291	0.220	0.192
E5-06	Motor d-Axis Inductance (Ld)	mH	113.84	77.84	40.00	27.52	31.73	23.09	25.28	13.36	11.77	8.94	8.32
E5-07	Motor q-Axis Inductance (Lq)	mH	157.16	103.56	60.80	37.00	40.88	34.39	35.20	18.44	14.60	11.40	10.64
E5-09	Motor Induction Voltage Constant 1 (Ke)	mVs/rad	490.8	513.8	543.7	520.3	580.8	602.7	601.5	584.6	610.3	595.2	711.6
E5-24	Motor Induction Voltage Constant 2 (Ke)	mV/(r/min)	0.0	0.0	0.0	0.0	0.0	0.0	0.0	0.0	0.0	0.0	0.0
E1-04	Maximum Output Frequency	Hz	72.5	72.5	72.5	72.5	72.5	72.5	72.5	72.5	72.5	72.5	72.5
E1-05	Maximum Voltage	V	380.0	380.0	380.0	380.0	380.0	380.0	380.0	380.0	380.0	380.0	380.0
E1-06	Base Frequency	Hz	72.5	72.5	72.5	72.5	72.5	72.5	72.5	72.5	72.5	72.5	72.5
E1-09	Minimum Output Frequency	Hz	3.6	3.6	3.6	3.6	3.6	3.6	3.6	3.6	3.6	3.6	3.6
C5-17	Motor Inertia	kgm²	0.0016	0.0022	0.0081	0.0133	0.0133	0.017	0.027	0.044	0.054	0.063	0.113
L3-24	Motor Acceleration Time for Inertia Calculations	s	0.092	0.068	0.125	0.139	0.083	0.070	0.082	0.092	0.083	0.079	0.118
n5-02	Motor Acceleration Time	s	0.092	0.068	0.125	0.139	0.083	0.070	0.082	0.092	0.083	0.079	0.118
n8-49	d-Axis Current for High Efficiency Control (OLV/PM)	%	-9.5	-9.4	-13.7	-10.0	-12.9	-19.9	-22.8	-19.8	-14.5	-16.1	-11.8

上旺科技有限公司
購買、維修此手冊零組件
電話：037-466333
Email：service@repairtw.com
Line id：@zzz2
www.repairtw.com

No.	Name	Unit	Default Settings										
E5-01	Motor Code Selection	–	2342	2343	2344	2345	2346	2347	2348	2349	234A	234C	234D
	Voltage Class	V	400	400	400	400	400	400	400	400	400	400	400
	Rated Power	kW	30	37	45	55	75	90	110	132	160	200	250
	Rated Speed	r/min	1450	1450	1450	1450	1450	1450	1450	1450	1450	1450	1450
E5-02	Motor Rated Power	kW	30.00	37.00	45.00	55.00	75.00	90.00	110.00	132.00	160.00	200.00	250.00
E5-03	Motor Rated Current	A	50.9	65.4	80.2	96.1	129.2	153.1	191.7	226.0	268.8	331.3	422.9
E5-04	Number of Motor Poles	–	6	6	6	6	6	6	6	6	6	6	6
E5-05	Motor Stator Resistance (r1)	Ω	0.136	0.091	0.064	0.048	0.028	0.024	0.015	0.011	0.007	0.006	0.003
E5-06	Motor d-Axis Inductance (Ld)	mH	6.68	5.30	3.76	3.09	2.24	2.20	1.34	1.23	0.92	0.84	0.61
E5-07	Motor q-Axis Inductance (Lq)	mH	8.16	6.80	4.88	4.75	3.03	3.23	2.16	1.67	1.30	1.25	0.89
E5-09	Motor Induction Voltage Constant 1 (Ke)	mVs/rad	710.8	652.7	604.8	669.1	646.8	708.0	637.8	677.0	661.7	687.1	655.9
E5-24	Motor Induction Voltage Constant 2 (Ke)	mV/(r/min)	0.0	0.0	0.0	0.0	0.0	0.0	0.0	0.0	0.0	0	0.0
E1-04	Maximum Output Frequency	Hz	72.5	72.5	72.5	72.5	72.5	72.5	72.5	72.5	72.5	72.5	72.5
E1-05	Maximum Voltage	V	380.0	380.0	380.0	380.0	380.0	380.0	380.0	380.0	380.0	380.0	380.0
E1-06	Base Frequency	Hz	72.5	72.5	72.5	72.5	72.5	72.5	72.5	72.5	72.5	72.5	72.5
E1-09	Minimum Output Frequency	Hz	3.6	3.6	3.6	3.6	3.6	3.6	3.6	3.6	3.6	3.6	3.6
C5-17	Motor Inertia	kgm²	0.137	0.252	0.304	0.41	0.55	0.82	0.96	1.60	1.95	2.82	3.70
L3-24	Motor Acceleration Time for Inertia Calculations	s	0.105	0.157	0.156	0.172	0.169	0.210	0.201	0.279	0.281	0.325	0.341
n5-02	Motor Acceleration Time	s	0.105	0.157	0.156	0.172	0.169	0.210	0.201	0.279	0.281	0.325	0.341
n8-49	d-Axis Current for High Efficiency Control (OLV/PM)	%	-10.5	-15.6	-17.4	-21.7	-17.3	-19.6	-24.1	-15.1	-17.0	-19.8	-19.3

Table B.22 200 V, 1150 r/min Type YASKAWA SST4 Series IPM Motor

No.	Name	Unit	Default Settings							
E5-01	Motor Code Selection	–	2402	2403	2405	2406	2408	240A	240B	240D
	Voltage Class	V	200	200	200	200	200	200	200	200
	Rated Power	kW	0.4	0.75	1.5	2.2	3.7	5.5	7.5	11
	Rated Speed	r/min	1150	1150	1150	1150	1150	1150	1150	1150
E5-02	Motor Rated Power	kW	0.4	0.75	1.5	2.2	3.7	5.5	7.5	11.0
E5-03	Motor Rated Current	A	1.77	3.44	5.94	9.17	14.79	20.21	27.40	39.0
E5-04	Number of Motor Poles	–	6	6	6	6	6	6	6	6
E5-05	Motor Stator Resistance (r1)	Ω	2.680	1.520	1.071	0.542	0.362	0.295	0.162	0.115
E5-06	Motor d-Axis Inductance (Ld)	mH	30.55	15.29	17.48	11.98	8.60	9.54	5.31	4.44
E5-07	Motor q-Axis Inductance (Lq)	mH	42.71	24.28	22.51	15.51	10.69	13.84	8.26	5.68
E5-09	Motor Induction Voltage Constant 1 (Ke)	mVs/rad	313.1	313.1	345.3	342.9	363.8	384.3	379.9	370.2
E5-24	Motor Induction Voltage Constant 2 (Ke)	mV/(r/min)	0.0	0.0	0.0	0.0	0.0	0.0	0.0	0.0
E1-04	Maximum Output Frequency	Hz	57.5	57.5	57.5	57.5	57.5	57.5	57.5	57.5
E1-05	Maximum Voltage	V	190.0	190.0	190.0	190.0	190.0	190.0	190.0	190.0
E1-06	Base Frequency	Hz	57.5	57.5	57.5	57.5	57.5	57.5	57.5	57.5
E1-09	Minimum Output Frequency	Hz	2.9	2.9	2.9	2.9	2.9	2.9	2.9	2.9
C5-17	Motor Inertia	kgm²	0.0022	0.0042	0.0081	0.0133	0.0168	0.027	0.044	0.054
L3-24	Motor Acceleration Time for Inertia Calculations	s	0.080	0.081	0.078	0.088	0.066	0.070	0.085	0.071
n5-02	Motor Acceleration Time	s	0.080	0.081	0.078	0.088	0.066	0.070	0.085	0.071
n8-49	d-Axis Current for High Efficiency Control (OLV/PM)	%	-8.4	-11.0	-10.7	-10.7	-9.4	-22.5	-22.2	-16.7

上征科技有限公司
購買、維修此手冊零組件
電話： 037-466333
Email: service@repairtw.com
Line id: @zzz
www.repairtw.com

No.	Name	Unit	Default Settings							
E5-01	Motor Code Selection	–	240E	240F	2410	2412	2413	2414	2415	2416
	Voltage Class	V	200	200	200	200	200	200	200	200
	Rated Power	kW	15	18	22	30	37	45	55	75
	Rated Speed	r/min	1150	1150	1150	1150	1150	1150	1150	1150
E5-02	Motor Rated Power	kW	15	18.50	22.00	30.00	37.00	45.00	55.00	75.00
E5-03	Motor Rated Current	A	55.9	65.4	77.0	103.5	126.0	153.1	188.5	260.4
E5-04	Number of Motor Poles	–	6	6	6	6	6	6	6	6
E5-05	Motor Stator Resistance (r1)	Ω	0.083	0.065	0.052	0.035	0.026	0.019	0.013	0.009
E5-06	Motor d-Axis Inductance (Ld)	mH	3.50	2.92	2.55	2.03	1.59	1.24	0.98	0.70
E5-07	Motor q-Axis Inductance (Lq)	mH	4.23	3.79	3.22	2.46	1.92	1.64	1.37	0.97
E5-09	Motor Induction Voltage Constant 1 (Ke)	mVs/rad	364.5	404.5	445.1	444.4	447.3	470.8	422.4	418.3
E5-24	Motor Induction Voltage Constant 2 (Ke)	mV/(r/min)	0.0	0.0	0.0	0.0	0.0	0.0	0.0	0.0
E1-04	Maximum Output Frequency	Hz	57.5	57.5	57.5	57.5	57.5	57.5	57.5	57.5
E1-05	Maximum Voltage	V	190.0	190.0	190.0	190.0	190.0	190.0	190.0	190.0
E1-06	Base Frequency	Hz	57.5	57.5	57.5	57.5	57.5	57.5	57.5	57.5
E1-09	Minimum Output Frequency	Hz	2.9	2.9	2.9	2.9	2.9	2.9	2.9	2.9
C5-17	Motor Inertia	kgm²	0.063	0.113	0.137	0.252	0.304	0.410	0.55	0.82
L3-24	Motor Acceleration Time for Inertia Calculations	s	0.061	0.089	0.090	0.122	0.119	0.132	0.145	0.159
n5-02	Motor Acceleration Time	s	0.061	0.089	0.090	0.122	0.119	0.132	0.145	0.159
n8-49	d-Axis Current for High Efficiency Control (OLV/PM)	%	-13.7	-15.2	-10.9	-9.8	-9.3	-11.5	-17.7	-17.1

Table B.23 400 V, 1150 r/min Type YASKAWA SST4 Series IPM Motor

No.	Name	Unit	Default Settings										
E5-01	Motor Code Selection	–	2432	2433	2435	2436	2438	243A	243B	243D	243E	243F	2440
	Voltage Class	V	400	400	400	400	400	400	400	400	400	400	400
	Rated Power	kW	0.4	0.75	1.5	2.2	3.7	5.5	7.5	11	15	18	22
	Rated Speed	r/min	1150	1150	1150	1150	1150	1150	1150	1150	1150	1150	1150
E5-02	Motor Rated Power	kW	0.4	0.75	1.5	2.2	3.7	5.5	7.5	11.0	15	18.50	22.00
E5-03	Motor Rated Current	A	0.89	1.72	3.02	4.58	7.40	10.21	13.75	19.5	27.7	32.7	39.2
E5-04	Number of Motor Poles	–	6	6	6	6	6	6	6	6	6	6	6
E5-05	Motor Stator Resistance (r1)	Ω	10.720	6.080	4.336	2.143	1.428	1.199	0.648	0.460	0.325	0.260	0.209
E5-06	Motor d-Axis Inductance (Ld)	mH	122.20	61.16	70.24	46.20	33.87	41.67	21.24	17.76	12.83	11.68	10.09
E5-07	Motor q-Axis Inductance (Lq)	mH	170.80	97.12	90.04	60.28	42.98	69.15	33.04	22.72	17.19	15.16	16.25
E5-09	Motor Induction Voltage Constant 1 (Ke)	mVs/rad	626.1	626.1	703.1	727.6	699.0	861.5	759.7	740.4	716.6	809.1	786.2
E5-24	Motor Induction Voltage Constant 2 (Ke)	mV/(r/min)	0.0	0.0	0.0	0.0	0.0	0.0	0.0	0.0	0.0	0.0	0.0
E1-04	Maximum Output Frequency	Hz	57.5	57.5	57.5	57.5	57.5	57.5	57.5	57.5	57.5	57.5	57.5
E1-05	Maximum Voltage	V	380.0	380.0	380.0	380.0	380.0	380.0	380.0	380.0	380.0	380.0	380.0
E1-06	Base Frequency	Hz	57.5	57.5	57.5	57.5	57.5	57.5	57.5	57.5	57.5	57.5	57.5
E1-09	Minimum Output Frequency	Hz	2.9	2.9	2.9	2.9	2.9	2.9	2.9	2.9	2.9	2.9	2.9
C5-17	Motor Inertia	kgm²	0.0022	0.0042	0.0081	0.0133	0.0168	0.027	0.044	0.054	0.063	0.113	0.137
L3-24	Motor Acceleration Time for Inertia Calculations	s	0.080	0.081	0.078	0.088	0.066	0.070	0.085	0.071	0.061	0.089	0.090
n5-02	Motor Acceleration Time	s	0.080	0.081	0.078	0.088	0.066	0.070	0.085	0.071	0.061	0.089	0.090
n8-49	d-Axis Current for High Efficiency Control (OLV/PM)	%	-8.4	-11.0	-9.9	-9.0	-11.4	-23.2	-22.1	-16.7	-20.2	-15.2	-27.7

上昭科技有限公司
購買、維修此手冊零組件
電話：037-466333
Email：service@repairtw.com
Line id：@zzz1
www.repairtw.com

No.	Name	Unit	Default Settings									
E5-01	Motor Code Selection	–	2442	2443	2444	2445	2446	2447	2448	2449	244A	244C
	Voltage Class	V	400	400	400	400	400	400	400	400	400	400
	Rated Power	kW	30	37	45	55	75	90k	110	132	160	200
	Rated Speed	r/min	1150	1150	1150	1150	1150	1150	1150	1150	1150	1150
E5-02	Motor Rated Power	kW	30.00	37.00	45.00	55.00	75.00	90.00	110.00	132.00	160.00	200.00
E5-03	Motor Rated Current	A	51.8	63.0	76.6	93.1	128.1	153.1	186.5	221.9	269.8	336.5
E5-04	Number of Motor Poles	–	6	6	6	6	6	6	6	6	6	6
E5-05	Motor Stator Resistance (r1)	Ω	0.140	0.106	0.076	0.051	0.032	0.026	0.015	0.012	0.009	0.007
E5-06	Motor d-Axis Inductance (Ld)	mH	8.12	6.43	4.96	3.99	2.97	2.44	1.87	1.49	1.41	1.22
E5-07	Motor q-Axis Inductance (Lq)	mH	9.84	7.71	6.56	5.39	3.90	3.23	2.46	2.08	1.88	1.51
E5-09	Motor Induction Voltage Constant 1 (Ke)	mVs/rad	888.8	857.7	941.6	853.8	829.6	835.6	833.4	848.6	889.1	915.0
E5-24	Motor Induction Voltage Constant 2 (Ke)	mV/(r/min)	0.0	0.0	0.0	0.0	0.0	0.0	0.0	0.0	0.0	0.0
E1-04	Maximum Output Frequency	Hz	57.5	57.5	57.5	57.5	57.5	57.5	57.5	57.5	57.5	57.5
E1-05	Maximum Voltage	V	380.0	380.0	380.0	380.0	380.0	380.0	380.0	380.0	380.0	380.0
E1-06	Base Frequency	Hz	57.5	57.5	57.5	57.5	57.5	57.5	57.5	57.5	57.5	57.5
E1-09	Minimum Output Frequency	Hz	2.9	2.9	2.9	2.9	2.9	2.9	2.9	2.9	2.9	2.9
C5-17	Motor Inertia	kgm^2	0.252	0.304	0.410	0.55	0.82	0.96	1.60	1.95	2.82	3.70
L3-24	Motor Acceleration Time for Inertia Calculations	s	0.122	0.119	0.132	0.145	0.159	0.155	0.211	0.214	0.256	0.268
n5-02	Motor Acceleration Time	s	0.122	0.119	0.132	0.145	0.159	0.155	0.211	0.214	0.256	0.268
n8-49	d-Axis Current for High Efficiency Control (OLV/PM)	%	-9.8	-10.2	-11.5	-16.0	-15.7	-15.7	-14.7	-16.5	-14.1	-10.4

上正科技有限公司
購買、維修 此手冊零組件
電話： 037-466333
Email: service@repairtw.com
Line id: @zzzz
www.repairtw.com

Appendix: C

MEMOBUS/Modbus Communications

C.1 MEMOBUS/MODBUS CONFIGURATION 478
C.2 COMMUNICATION SPECIFICATIONS 479
C.3 CONNECTING TO A NETWORK 480
C.4 MEMOBUS/MODBUS SETUP PARAMETERS 482
C.5 DRIVE OPERATIONS BY MEMOBUS/MODBUS 485
C.6 COMMUNICATIONS TIMING 486
C.7 MESSAGE FORMAT 487
C.8 MESSAGE EXAMPLES 489
C.9 MEMOBUS/MODBUS DATA TABLE 491
C.10 ENTER COMMAND 503
C.11 COMMUNICATION ERRORS 504
C.12 SELF-DIAGNOSTICS 505

[illegible]有限公司
購買、維修此手冊零組件
電話: 037-466333
Email: service@repairtw.com
Line id: @zzzz
www.repairtw.com

C.1 MEMOBUS/Modbus Configuration

Drives can be controlled from a PLC or other master device via serial communications using the MEMOBUS/Modbus protocol.

MEMOBUS/Modbus communication can be configured using one master (PLC) and a maximum of 255 slaves. The drive has slave functionality only, meaning that serial communication is normally initiated from the master and responded to by the slaves.

The master performs serial communications with only one slave at a time. The address or node for each slave must be set beforehand so that the master can communicate with the slave at that address. A slave that receives a command from the master will perform the specified function and then send a response back to the master.

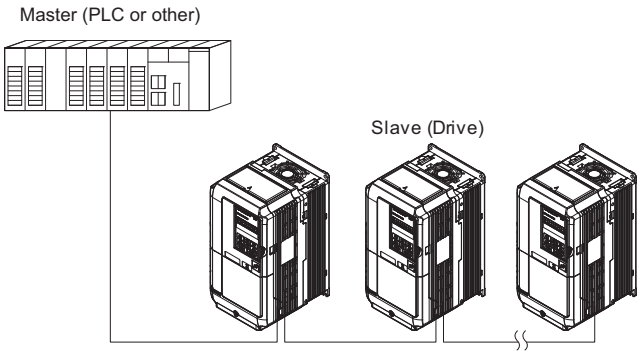

Figure C.1 Connecting Multiple Drives to a PLC

上正科技有限公司
購買、維修 此手冊零組件
電話： 037-466333
Email: service@repairtw.com
Line id: @zzzz
www.repairtw.com

C.2 Communication Specifications

MEMOBUS/Modbus specifications appear in the following table:

Item	Specifications	
Interface	RS-422, RS-485	
Communications Cycle	Asynchronous (Start-stop synchronization)	
Communication Parameters	Communication Speeds Available	1.2; 2.4; 4.8; 9.6; 19.2; 38.4; 57.6; 76.8; 115.2 kbps
	Data length	8 bit (fixed)
	Parity	Select even, odd, or none
	Stop bit	1 bit (fixed)
Protocol	MEMOBUS/Modbus (using RTU mode only)	
Max Number of Slaves	255 drives	

上正科技有限公司
購買、維修 此手冊零組件
電話： 037-466333
Email: service@repairtw.com
Line id: @zzzz
www.repairtw.com

C.3 Connecting to a Network

This section explains how to connect the drive to a MEMOBUS/Modbus network and the network termination required.

◆ Network Cable Connection

Follow the instructions below to connect the drive to a MEMOBUS/Modbus network.

1. With the power shut off, connect the communications cable to the drive and the master. Use terminals TB5 for MEMOBUS/Modbus.

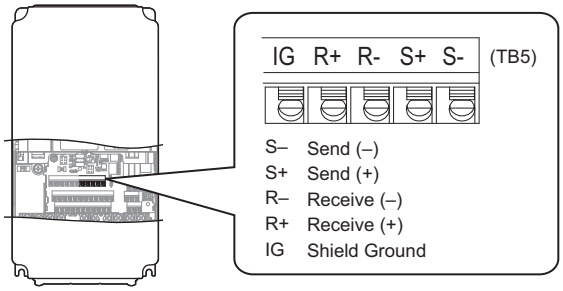

Figure C.2 Serial Communications Cable Connection Terminals (TB5)

Note: Separate the communications cables from the main circuit cables and other wiring and power cables. Use shielded cables for the communications cables, and properly shielded clamps to prevent problems with noise. When using RS-485 communications, connect S+ to R+, and S- to R- as shown in the diagram below.

2. Check or set the termination resistor selection at all slaves. Use the description in ***Network Termination on page 481*** for slaves that are A1000 drives.
3. Switch the power on.
4. Set the parameters needed for serial communications (H5-01 through H5-12) using the digital operator.
5. Shut the power off and wait until the display on the digital operator goes out completely.
6. Turn the power back on.
7. The drive is now ready to begin communicating with the master.

上正科技有限公司
電話： 037-466333
Email: service@repairtw.com
Line id: @zzzz
www.repairtw.com

◆ Wiring Diagram for Multiple Connection

Figure C.3 and ***Figure C.4*** explain the wiring diagrams for multiple connections using MEMOBUS/Modbus communication.

■ RS-485 Interface

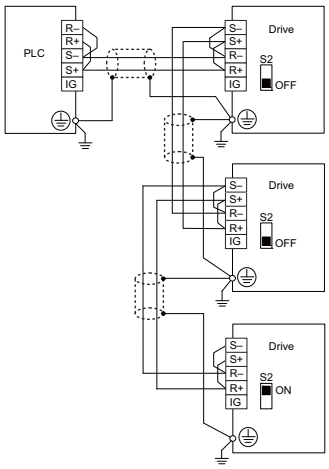

Figure C.3 RS-485 Interface

Note: 1. Turn on the DIP switch on the drive that is located at the end of the network. All other slave devices must have this DIP switch set to the OFF position.
2. Set H5-07 to “1” when using the RS-485 interface.

■ RS-422 Interface

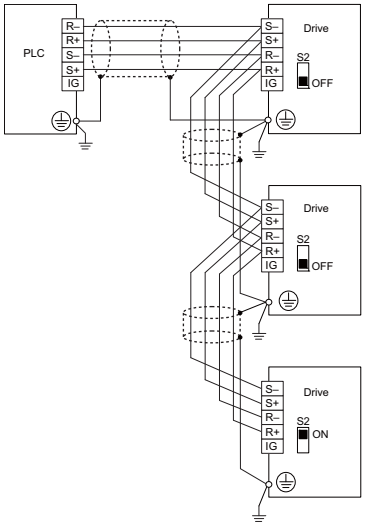

Figure C.4 RS-422 Interface

Note: **1.** Turn on the DIP switch on the drive that is located at the end of the network. All other slave devices must have this DIP switch set to the OFF position.
2. Set H5-07 to “0” when using the RS-485 interface.

◆ Network Termination

The two ends of the MEMOBUS/Modbus network line have to be terminated. The drive has a built in termination resistor that can be enabled or disabled using DIP switch S2. If a drive is located at the end of a network line, enable the termination resistor by setting DIP switch S2 to the ON position. Disable the termination resistor on all slaves that are not located at the network line end.

Refer to ***MEMOBUS/Modbus Termination on page 80*** for details on setting S2.

上正科技有限公司
購買 維修 此手冊零組件
電話： 037-466333
Email: service@repairtw.com
Line id: @zzzz
www.repairtw.com

C.4 MEMOBUS/Modbus Setup Parameters

◆ MEMOBUS/Modbus Serial Communication

This section describes parameters necessary to set up MEMOBUS/Modbus communications.

■ H5-01: Drive Slave Address

Sets the drive slave address used for MEMOBUS/Modbus communications.

Note: After changing this parameter, the power must be cycled to enable the new setting.

No.	Name	Setting Range	Default
H5-01	Drive Slave Address	0 to FFH <1>	1FH

<1> If the address is set to 0, no response will be provided during communications.

For serial communications to work, each individual slave drive must be assigned a unique slave address. Setting H5-01 to any value besides 0 assigns the drive its address in the network. Slave address don't need to be assigned in sequential order, but each address needs to be unique so that no two drives have the same address.

■ H5-02: Communication Speed Selection

Sets the MEMOBUS/Modbus communications speed.

Note: After changing this parameter, the power must be cycled to enable the new setting.

No.	Name	Setting Range	Default
H5-02	Communication Speed Selection	0 to 5	3

上正科技有限公司
購買、維修 此手冊零組件
電話： 037-466333
Email: service@repairtw.com
www.repairtw.com

H5-02	Communication Speed	H5-02	Communication Speed
0	1200 bps	5	38400 bps
1	2400 bps	6	57600 bps
2	4800 bps	7	76800 bps
3	9600 bps	8	115200 bps
4	19200 bps		

■ H5-03: Communication Parity Selection

Sets the parity used for MEMOBUS/Modbus communications.

Note: After changing this parameter, the power must be cycled to enable the new setting.

No.	Name	Setting Range	Default
H5-03	Communication Parity Selection	0 to 2	0

Setting 0: No parity
Setting 1: Even parity
Setting 2: Odd parity

■ H5-04: Stopping Method after Communication Error

Selects the stopping method after a communications error (CE) has occurred.

No.	Name	Setting Range	Default
H5-04	Stopping Method after Communication Error	0 to 3	3

Setting 0: Ramp to stop (uses the deceleration time currently enabled)
Setting 1: Fast Stop (uses the deceleration time in C1-09)
Setting 2: Coast to stop
Setting 3: Alarm only (continue operation)

■ H5-05: Communication Fault Detection Selection

Enables or disabled the communication error (CE) detection for MEMOBUS/Modbus communications.

No.	Name	Setting Range	Default
H5-05	Communication Fault Detection Selection	0 or 1	1

Setting 0: Disabled

No communication error detection. The drive continues operation.

Setting 1: Enabled

If the drive does not receive data from the master for longer than the time set to H5-09, then a CE fault will be triggered and the drive will operate as determined by parameter H5-04.

■ H5-06: Drive Transmit Wait Time

Sets the time the drive waits after receiving data from a master until responding data.

No.	Name	Setting Range	Default
H5-06	Drive Transmit Wait Time	5 to 65 ms	5 ms

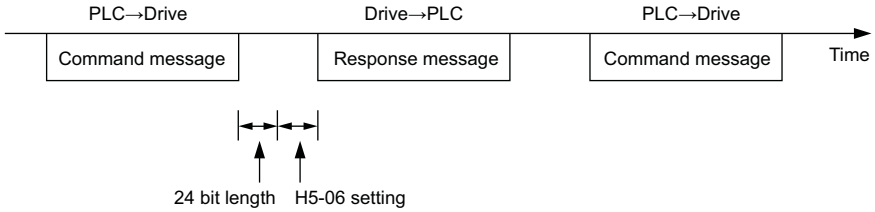

Figure C.5 Drive Transmit Wait Time Setting

■ H5-07: RTS Control Selection

上正科技有限公司
購買、維修 此手冊零組件
電話: 037-466333
Email: service@repairtw.com
Line id: @zzz
www.repairtw.com

Enables or disables RTS control.

No.	Name	Setting Range	Default
H5-07	RTS Control Selection	0 or 1	1

Setting 0: Disabled. RTS is always on.

Use this setting when using RS-485 signals for communications.

Setting 1: Enabled. RTS switches while sending.

Use this setting when using RS-422 signals for communications.

■ H5-09: CE Detection Time

Sets the time the communications must be lost before the drive triggers a CE fault.

No.	Name	Setting Range	Default
H5-09	CE Detection Time	0.0 to 10.0 s	2.0 s

■ H5-10: Unit Selection for MEMOBUS/Modbus Register 0025H

Sets the unit for the output voltage monitor value in MEMOBUS/Modbus register 0025H.

No.	Name	Setting Range	Default
H5-10	Unit Selection for MEMOBUS/Modbus Register 0025H	0 or 1	0

Setting 0: 0.1 V units

Setting 1: 1 V units

■ H5-11: Communications Enter Function Selection

Selects if an Enter command is needed to change parameter values via MEMOBUS/Modbus communications. *Refer to Enter Command on page 503*.

No.	Name	Setting Range	Default
H5-11	Communications Enter Function Selection	0 or 1	1

Setting 0: Enter command necessary

Parameter changes become effective after an Enter command. An Enter command must only be sent after the last parameter change, not for each single parameter.

Setting 1: Enter command not necessary

Parameter value changes become effective immediately without the need to send an Enter command.

■ H5-12: Run Command Method Selection

Selects the type of sequence used when the Run command source is set to MEMOBUS/Modbus communications (b1-02, b1-16 = 2).

No.	Name	Setting Range	Default
H5-12	Run Command Method Selection	0 or 1	0

Setting 0: FWD/Stop, REV/Stop

Setting bit 0 of MEMOBUS/Modbus register will start and stop the drive in the forward direction. Setting bit 1 will start and stop the drive in reverse.

Setting 1: Run/Stop, FWD/REV

Setting bit 0 of MEMOBUS/Modbus register will start and stop the drive. Setting bit 1 changes the direction.

上正科技有限公司
購買、維修 此手冊零組件
電話： 037-466333
Email: service@repairtw.com
Line id: @zzzz
www.repairtw.com

C.5 Drive Operations by MEMOBUS/Modbus

The drive operations that can be performed by MEMOBUS/Modbus communication depend on drive parameter settings. This section explains the functions that can be used and related parameter settings.

◆ Observing the Drive Operation

A PLC can perform the following actions with MEMOBUS/Modbus communications at any time regardless of parameter settings (except H5-□□).

- Observe drive status and drive control terminal status from a PLC.
- Read and write parameters.
- Set and reset faults.
- Set multi-function inputs. Inputs settings from the input terminals S□ and from MEMOBUS/Modbus communications are both linked by an OR operation.

◆ Controlling the Drive

To start and stop the drive or set the frequency reference using MEMOBUS/Modbus communications, an external reference must be selected and the parameters listed in ***Table C.1*** must be adjusted accordingly.

Table C.1 Setting Parameters for Drive Control from MEMOBUS/Modbus

Reference Source	Parameter	Name	Required Setting
External Reference 1	b1-01	Frequency Reference Selection 1	2
	b1-02	Run Command Selection 1	2
External Reference 2	b1-15	Frequency Reference Selection 2	2
	b1-16	Run Command Selection 2	2

上正科技有限公司
購買、維修 此手冊零組件
電話： 037-466333
Email: service@repairtw.com
Line id: @zzzz
www.repairtw.com

Refer to b1-01: Frequency Reference Selection 1 on page 136 and ***Refer to b1-02: Run Command Selection 1 on page 137*** for details on external reference parameter selections. ***Refer to Setting 2: External reference 1/2 selection on page 216*** for instructions on how to select external reference 1 and 2.

C.6 Communications Timing

To prevent overrun in the slave drive, the master should wait a certain time between sending messages to the same drive. In the same way, the slave drive must wait before sending response messages to prevent an overrun in the master. This section explains the message timing.

◆ Command Messages from Master to Drive

In order to prevent overrun and data loss, the master must wait between receiving a response and sending the same type of command as before to the same slave drive. The minimum wait time depends on the command as shown in the table below.

Table C.2 Minimum Wait Time for Sending Messages

Command Type	Example	Minimum Wait Time
1	• Control command (Run, Stop) • Set inputs/outputs • Read monitors and parameter values	5 ms
2	• Write parameters	H5-11 = 0: 50 ms H5-11 = 1: 200ms <1>
3	• Save changes using an Enter command	200 ms to 2 s, depending on the number of parameters that were changed <1>

<1> If the drive receives command type 1 data during the minimum wait time, it will perform the command and then respond. However, if it receives a command type 2 or 3 during that time, either a communication error will result or the command will be ignored.

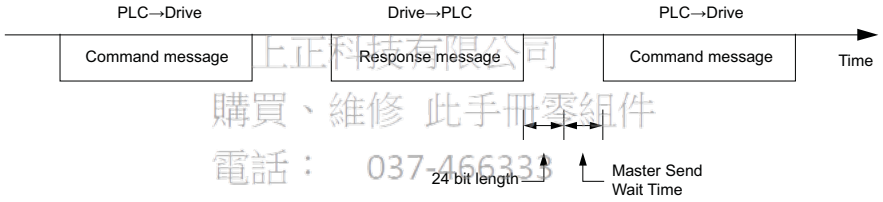

上正科技有限公司
購買、維修 此手冊零組件
電話： 037-466333
Email: service@repairtw.com
Line Id: @2222
www.repairtw.com

Figure C.6 Minimum Wait Time for Sending Messages

A timer should be set in the master to check how long it takes for the slave drive(s) to respond to the master. If no response is received within a certain amount of time, the master should try resending the message.

◆ Response Messages from Drive to Master

If the drive receives a command from the master, it will process the data received and wait for the time set in H5-06 until it responds. Increase H5-06 if the drive response causes overrun in the master.

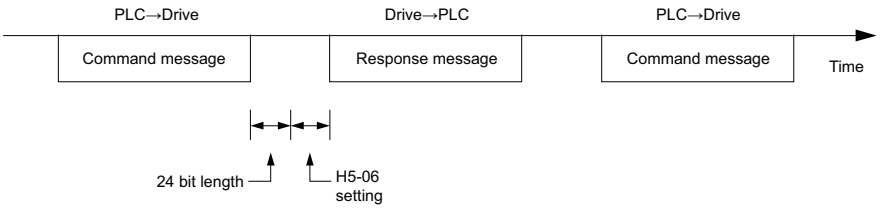

Figure C.7 Minimum Response Wait Time

C.7 Message Format

◆ Message Content

In MEMOBUS/Modbus communications, the master sends commands to the slave, and the slave responds. The message format is configured for both sending and receiving as shown below, and the length of data packets depends on the command (function) content.

SLAVE ADDRESS
FUNCTION CODE
DATA
ERROR CHECK

◆ Slave Address

The slave address in the message defines the note the message is sent to. Use addresses between 0 and FF (hex). If a message with slave address 0 is sent (broadcast), the command from the master will be received by all slaves. The slaves do not provide a response to a broadcast type message.

◆ Function Code

The three types of function codes are shown in the table below.

Function Code	Function Name	Data Length (bytes)			
		Command Message		Response Message	
		Minimum	Maximum	Minimum	Maximum
03H	Read MEMOBUS/Modbus registers	8	8	7	37
08H	Loopback test	8	8	8	8
10H	Write to multiple MEMOBUS/Modbus registers	11	41	8	8

上正科技有限公司
購買、維修 此手冊零組件
電話： 037-466333
Email: service@repairtw.com
Line Id: @2222
www.repairtw.com

◆ Data

Configure consecutive data by combining the MEMOBUS/Modbus register address (test code in case of a loopback test) and the data the register contains. The data length changes depending on the command details.

A drive MEMOBUS/Modbus register always has a data length of two bytes. Therefore data written into drive registers must also always have a length of two bytes. Register data read out from the drive will always consist of two bytes.

◆ Error Check

The drive uses a CRC-16 (cyclic redundancy check, checksum method) for checking data validity. Use the procedure described below when calculating the CRC-16 checksum for command data or when verifying response data.

■ Command Data

When the drive receives data, it calculates the CRC-16 checksum from the data and compares it to the CRC-16 value received within the message. Both must match before a command is processed.

An initial value of FFFFH (i.e., all 16 bits equal 1) must be used for CRC-16 calculations in the MEMOBUS/Modbus protocol.

Calculate the CRC-16 checksum using the following steps:

1. The starting value is FFFFH.
2. Perform an XOR operation of this value and the slave address.
3. Right shift the result.
4. When the overflow bit of the shift operation becomes 1, perform an XOR operation of the result from step 3 above and the fix value A001H.
5. Repeat steps 3 and 4 until eight shift operations have been performed.
6. After eight shift operations, perform an XOR operation with the result and the next data in the message (function code, register address, data). Continue with steps 3 to 5 until the last data has been processed.
7. The result of the last shift or XOR operation is the checksum.

The example in *Table C.3* shows the CRC-16 calculation of the slave address 02H and the function code 03H, yielding the result 40D1H.

Note: This example does not show the calculation for a complete MEMOBUS/Modbus command. Normally data would follow in the calculation.

Table C.3 CRC-16 Checksum Calculation Example

Description	Calculation	Overflow	Description	Calculation	Overflow
Initial Value (FFFFH)	1111 1111 1111 1111		Function Code 03H	0000 0000 0000 0011	
Address 02H	0000 0000 0000 0010		XOR w result	1000 0001 0011 1101	
XOR w initial value	1111 1111 1111 1101		Shift 1	0100 0000 1001 1110	1
Shift 1	0111 1111 1111 1110	1	XOR w A001H	1010 0000 0000 0001	
XOR w A001H	1010 0000 0000 0001		XOR result	1110 0000 1001 1111	
XOR result	1101 1111 1111 1111		Shift 2	0111 0000 0100 1111	1
Shift 2	0110 1111 1111 1111	1	XOR w A001H	1010 0000 0000 0001	
XOR w A001H	1010 0000 0000 0001		XOR result	1101 0000 0100 1110	
XOR result	1100 1111 1111 1110		Shift 3	0110 1000 0010 0111	0
Shift 3	0110 0111 1111 1111	0	Shift 4	0011 0100 0001 0011	1
Shift 4	0011 0011 1111 1111	1	XOR w A001H	1010 0000 0000 0001	
XOR w A001H	1010 0000 0000 0001		XOR result	1001 0100 0001 0010	
XOR result	1001 0011 1111 1110		Shift 5	0100 1010 0000 1001	0
Shift 5	0100 1001 1111 1111	0	Shift 6	0010 0101 0000 0100	1
Shift 6	0010 0100 1111 1111	1	XOR w A001H	1010 0000 0000 0001	
XOR w A001H	1010 0000 0000 0001		XOR result	1000 0101 0000 0101	
XOR result	1000 0100 1111 1110		Shift 7	0100 0010 1000 0010	1
Shift 7	0100 0010 0111 1111	0	XOR w A001H	1010 0000 0000 0001	
Shift 8	0010 0001 0011 1111	1	XOR result	1110 0010 1000 0011	
XOR w A001H	1010 0000 0000 0001		Shift 8	0111 0001 0100 0001	1
XOR result	1000 0001 0011 1110		XOR w A001H	1010 0000 0000 0001	
Perform operations with next data (function code)			XOR result	1101 0001 0100 0000	
			CRC-16	1101 0001 0100 0000	
				D140H	
			Continue from here with next data.		

上正科技有限公司
購買、維修 此手冊零組件
電話： 037-466333
Email: service@repairtw.com
Line id: @zzzz
www.repairtw.com

■ Response Data

To be sure that the data is valid, perform a CRC-16 calculation on the response message data as described above. Compare the result to the CRC-16 checksum that was received within the response message. Both should match.

C.8 Message Examples

Below are some examples of command and response messages.

◆ Reading Drive MEMOBUS/Modbus Register Contents

Using the function code 03H (Read), a maximum of 16 MEMOBUS/Modbus registers can be read out at a time.

The following table shows message examples when reading status signals, error details, data link status, and frequency references from the slave 2 drive.

Command Message		
Slave Address		02H
Function Code		03H
Starting No.	Upper	00H
	Lower	20H
Data Quantity	Upper	00H
	Lower	04H
CRC-16	Upper	45H
	Lower	F0H

Response Message (normal)		
Slave Address		02H
Function Code		03H
Data Quantity		08H
1st storage register	Upper	00H
	Lower	65H
Next storage register	Upper	00H
	Lower	00H
Next storage register	Upper	00H
	Lower	00H
Next storage register	Upper	01H
	Lower	F4H
CRC-16	Upper	AFH
	Lower	82H

Response Message (fault)		
Slave Address		02H
Function Code		83H
Error Code		03H
CRC-16	Upper	F1H
	Lower	31H

◆ Loopback Test

上正科技有限公司
購買、維修 此主此零組件
電話： 037-466333
Email: service@repairtw.com
Line 搜 @xxx
www.repairtw.com

Function code 08H performs a loopback test. This test returns a response message with exactly the same content as the command message and can be used to check communications between the master and slave. User-defined test code and data values can be set.

The following table shows a message example when performing a loopback test with the slave 1 drive.

Command Message		
Slave Address		01H
Function Code		08H
Test Code	Upper	00H
	Lower	00H
Data	Upper	A5H
	Lower	37H
CRC-16	Upper	DAH
	Lower	8DH

Response Message (normal)		
Slave Address		01H
Function Code		08H
Test Code	Upper	00H
	Lower	00H
Data	Upper	A5H
	Lower	37H
CRC-16	Upper	DAH
	Lower	8DH

Response Message (fault)		
Slave Address		01H
Function Code		89H
Error Code		01H
CRC-16	Upper	86H
	Lower	50H

◆ Writing to Multiple Registers

Function code 10h allows the user to write multiple drive MEMOBUS/Modbus registers with one message. This process works similar to reading registers, i.e., the address of the first register that is to be written and the data quantity must be set in the command message. The data to be written must be consecutive so that the register addresses are in order, starting from the specified address in the command message. The data order must be high byte, then lower byte.

The following table shows an example of a message where a forward operation has been set with a frequency reference of 60.0 Hz for the slave 1 drive.

If parameter values are changed using the Write command, depending on the setting of H5-11, an Enter command will be necessary to activate the data or save them. *Refer to H5-11: Communications Enter Function Selection on page 483* and *Refer to Enter Command on page 503* for detailed descriptions.

Command Message		Response Message (normal)		Response Message (fault)	
Slave Address	01H	Slave Address	01H	Slave Address	01H
Function Code	10H	Function Code	10H	Function Code	90H

Command Message		
Starting No.	Upper	00H
	Lower	01H
Data Quantity	Upper	00H
	Lower	02H
Number of Bytes		04H
Starting Data	Upper	00H
	Lower	01H
Next Data	Upper	02H
	Lower	58H
CRC-16	Upper	63H
	Lower	39H

Response Message (normal)		
Starting No.	Upper	00H
	Lower	01H
Data Quantity	Upper	00H
	Lower	02H
CRC-16	Upper	10H
	Lower	08H

Response Message (fault)		
Error Code		02H
CRC-16	Upper	CDH
	Lower	C1H

Note: For the number of bytes in the command message, take double the number of the data quantity.

上正科技有限公司
購買、維修 此手冊零組件
電話： 037-466333
Email: service@repairtw.com
Line id: @zzzz
www.repairtw.com

C.9 MEMOBUS/Modbus Data Table

Table below lists all MEMOBUS/Modbus data. There are three types of data: command data, monitor data, and broadcast data.

◆ Command Data

It is possible to both read and write command data.

Note: Bits that are not used should be set to 0. Refrain from writing to reserved registers.

Register No.	Contents	
0000H	Reserved	
0001H	Operation Commands and Multi-function Inputs	
	bit 0	H5-12 = 0: Forward Run Command (0 = Stop, 1 = Forward Run) H5-12 = 1: Run Command (0 = Stop, 1 = Run)
	bit 1	H5-12 = 0: Reverse Run Command (0 = Stop, 1 = Reverse Run) H5-12 = 1: Forward/Reverse (0 = Forward, 1 = Reverse)
	bit 2	External Fault (EF0)
	bit 3	Fault Reset
	bit 4	Multi-Function Input 1 Function is ComRef when H1-01 = 40 (Forward/Stop). *Refer to d: Reference Settings on page 180* for ComRef explanations.
	bit 5	Multi-Function Input 2 Function is ComCtrl when H1-02 = 41 (Reverse/Stop). *Refer to d: Reference Settings on page 180* for ComCtrl explanations.
	bit 6	Multi-Function Input 3
	bit 7	Multi-Function Input 4
	bit 8	Multi-Function Input 5
	bit 9	Multi-Function Input 6
	bit A	Multi-Function Input 7
	bit B	Multi-Function Input 8
	bit C to F	Reserved
0002H	Frequency Reference	Units are determined by parameter o1-03.
0003H	V/f Gain	
0004H	Torque Reference/Torque Limit, 0.1% units, signed	
0005H	Torque Compensation, 0.1% units, signed	
0006H	PID Target, 0.01% units, signed	
0007H	Analog Output Terminal FM Setting (10 V / 4000 H)	
0008H	Analog Output Terminal AM Setting (10 V / 4000 H)	
0009H	Settings for Multi-Function Digital Outputs	
	bit 0	Multi-Function Contact Output (terminal M1-M2)
	bit 1	Multi-Function Contact Output 2 (terminal M3-M4)
	bit 2	Multi-Function Contact Output 2 (terminal M5-M6)
	bit 3 to 5	Reserved
	bit 6	Enables the function in bit 7
	bit 7	Fault Contact Output (terminal MA/MB-MC)
	bit 8 to F	Reserved
000AH	Pulse Output Terminal MP Setting, 1 Hz units, Setting Range: 0 to 32000	
000BH to 000EH	Reserved	
000FH	Control Selection Setting	
	bit 0	Reserved
	bit 1	PID Target Input
	bit 2	Torque reference / torque limit input (enables the setting from MEMOBUS/Modbus)
	bit 3	Torque compensation input (enables the setting from MEMOBUS/Modbus)
	bit 4 to B	Reserved
	bit C	Enable Terminal S5 Input for Broadcast Data
	bit D	Enable Terminal S6 Input for Broadcast Data
	bit E	Enable Terminal S7 Input for Broadcast Data
	bit F	Enable Terminal S8 Input for Broadcast Data
0010H to 001AH	Reserved	
001BH	Analog Monitor Option AO-A3 Analog Output 1 (10 V/4000 H)	
001CH	Analog Monitor Option AO-A3 Analog Output 2 (10 V/4000 H)	
001DH	Digital Output Option DO-A3 Output (Binary)	
001EH to 001FH	Reserved	

卡度科技有限公司
購買、維修 此手冊零組件
電話： 037-466333
Email: service@repairtw.com
Line id: @zzzz
www.repairtw.com

◆ Monitor Data

Monitor data can be read only.

Register No.	Contents	
0020H	Drive Status 1	
	bit 0	During Run
	bit 1	During Reverse
	bit 2	Drive Ready
	bit 3	Fault
	bit 4	Data Setting Error
	bit 5	Multi-Function Contact Output 1 (terminal M1-M2)
	bit 6	Multi-Function Contact Output 2 (terminal M3-M4)
	bit 7	Multi-Function Contact Output 3 (terminal M5-M6)
	bit 8 to bit D	Reserved
	bit E	ComRef status
	bit F	ComCtrl status
0021H	Fault Contents 1	
	bit 0	Overcurrent (oC), Ground fault (GF)
	bit 1	Overvoltage (ov)
	bit 2	Drive Overload (oL2)
	bit 3	Overheat 1 (oH1), Drive Overheat Warning (oH2)
	bit 4	Dynamic Braking Transistor Fault (rr), Braking Resistor Overheat (rH)
	bit 5	Reserved
	bit 6	PID Feedback Loss (FbL / FbH)
	bit 7	EF to EF8: External Fault
	bit 8	CPF□□: Hardware Fault (includes oFx)
	bit 9	Motor Overload (oL1), Overtorque Detection 1/2 (oL3/oL4), Undertorque Detection 1/2 (UL3/UL4)
	bit A	PG Disconnected (PGo), PG Hardware Fault (PGoH), Overspeed (oS), Excessive Speed Deviation (dEv),
	bit B	Main Circuit Undervoltage (Uv)
	bit C	Undervoltage (Uv1), Control Power Supply Undervoltage (Uv2), Soft Charge Circuit Fault (Uv3)
	bit D	Output Phase Loss (LF), Input Phase Loss (PF)
	bit E	MEMOBUS/Modbus Communication Error (CE), Option Communication Error (bUS)
	bit F	Operator Connection Fault (oPr)
0022H	Data Link Status	
	bit 0	Writing data or switching motors
	bit 1	Reserved
	bit 2	
	bit 3	Upper or lower limit error
	bit 4	Data conformity error
	bit 5	Writing to EEPROM
	bit 6 to bit F	Reserved
0023H	Frequency Reference, <1>	
0024H	Output Frequency, <1>	
0025H	Output Voltage Reference, 0.1 V units (units are determined by parameter H5-10)	
0026H	Output Current, 0.1 A units	
0027H	Output Power	
0028H	Torque Reference	
0029H	Fault Contents 2	
	bit 0	Reserved
	bit 1	Ground Fault (GF)
	bit 2	Input Phase Loss (PF)
	bit 3	Output Phase Loss (LF)
	bit 4	Braking Resistor Overheat (rH)
	bit 5	Reserved
	bit 6	Motor Overheat 2 (PTC input) (oH4)
	bit 7 to bit F	Reserved

上揚自動化公司
維修、銷售、各廠牌伺服馬達
電話：03-486333
E-mail: service@repairtw.com
Line id: @zzzz
www.repairtw.com

Register No.	Contents	
002AH	Alarm Contents1	
	bit 0, 1	Reserved
	bit 2	Run Command Input Error (EF)
	bit 3	Drive Baseblock (bb)
	bit 4	Overtorque Detection 1 (oL3)
	bit 5	Heatsink Overheat (oH)
	bit 6	Overvoltage (ov)
	bit 7	Undervoltage (Uv)
	bit 8	Cooling Fan Error (FAn)
	bit 9	MEMOBUS/Modbus Communication Error (CE)
	bit A	Option Communication Error (bUS)
	bit B	Undertorque Detection 1/2 (UL3/UL4)
	bit C	Motor Overheat (oH3)
	bit D	PID Feedback Loss (FbL, FbH)
	bit E	Reserved
	bit F	Serial Communication Transmission Error (CALL)
002BH	Input Terminal Status	
	bit 0	Terminal S1 Closed
	bit 1	Terminal S2 Closed
	bit 2	Terminal S3 Closed
	bit 3	Terminal S4 Closed
	bit 4	Terminal S5 Closed
	bit 5	Terminal S6 Closed
	bit 6	Terminal S7 Closed
	bit 7	Terminal S8 Closed
	bit 8 to bit F	Reserved
002CH	Drive Status 2	
	bit 0	During Run
	bit 1	Zero Speed
	bit 2	Speed Agree
	bit 3	User Speed Agree
	bit 4	Frequency Detection 1
	bit 5	Frequency Detection 2
	bit 6	Drive Ready
	bit 7	During Undervoltage
	bit 8	During Baseblock
	bit 9	Frequency Reference from Operator Keypad
	bit A	Run Command from Operator Keypad
	bit B	Over/Undertorque 1, 2
	bit C	Frequency Reference Loss
	bit D	During Fault Restart
	bit E	Fault
	bit F	Communication Timeout
002DH	Output Terminal Status	
	bit 0	Multi-Function Contact Output 1 (terminal M1-M2)
	bit 1	Multi-Function Contact Output 2 (terminal M3-M4)
	bit 2	Multi-Function Contact Output 3 (terminal M5-M6)
	bit 3 to 6	Reserved
	bit 7	Fault Contact Output (terminal MA/MB-MC)
	bit 8 to F	Reserved
002EH	Reserved	
002FH	Frequency Reference Bias (from Up/Down 2 Function), 0.1% units	
0030H	Reserved	
0031H	DC Bus Voltage, 1 Vdc units	
0032H	Torque Reference (U1-09), 1% units	
0033H	Reserved	
0034H	Product Code 1 [ASCII], Product Type (A0 for A1000)	
0035H	Product Code 2 [ASCII], Region Code	
0036H, 0037H	Reserved	
0038H	PID Feedback, 0.1% units, unsigned, 100% / max. output frequency	
0039H	PID Input, 0.1% units, signed, 100% / max. output frequency	
003AH	PID Output, 0.1% units, signed, 100% / max. output frequency	
003BH, 003CH	Reserved	

卡本科技有限公司
購買、維修此手冊零組件
電話：037-466333
Email: service@repairtw.com
Line id: @222
www.repairtw.com

Register No.	Contents	
003DH	Communications Error Contents <3>	
	bit 0	CRC Error
	bit 1	Data Length Error
	bit 2	Reserved
	bit 3	Parity Error
	bit 4	Overrun Error
	bit 5	Framing Error
	bit 6	Timeout
	bit 7 to bit F	Reserved
003EH	Output Frequency	r/min <4>
003FH		0.01% units
0040H to 004AH	Used for various monitors U1-□□. *Refer to U: Monitors on page 447* for parameter details.	
004BH	Drive status (U1-12)	
	bit 0	During Run
	bit 1	During Zero Speed
	bit 2	During Reverse Run
	bit 3	During Fault Reset Signal Input
	bit 4	During Speed Agree
	bit 5	Drive Ready
	bit 6	Alarm
	bit 7	Fault
	bit 8	During Operation Error (oPE□□)
	bit 9	During Momentary Power Loss
	bit A	Motor 2 selected
	bit B	Reserved
	bit E	ComRef status, NetRef status
	bit F	ComCtrl status, NetCtrl status
004CH to 007EH	Used for various monitors U1-□□, U4-□□, U5-□□ and U6-□□. *Refer to U: Monitors on page 447* for parameter details.	
007FH	Alarm Code, *Refer to Alarm Register Contents on page 501* for alarm codes.	
0080H to 0097H	Used for monitors U2-□□, U3-□□. *Refer to U: Monitors on page 447* for parameter details and *Refer to Fault Trace Contents on page 500* for register value descriptions.	
0098H	High Word of Accumulated Operation Time Monitor, 10H units (U4-01)	
0099H	Low Word of Accumulated Operation Time Monitor, 1H units (U4-01)	
009AH	High Word of Cooling Fan Operation Time Monitor (U4-03)	
009BH	Low Word of Cooling Fan Operation Time Monitor (U4-03)	
009CH to 00AAH	Reserved	
00ABH	Drive Rated Current <2>	
00ACH	Motor Speed (U1-05)	r/min units <4>
00ADH		0.01% units
00AEH, 00AFH	Reserved	
00B0H	Option Code Connected to CN5-A	Register contains ASCII code of the option card. DI-A3 = 0x01 DO-A3 = 0x02 AI-A3 = 0x03 AO-A3 = 0x04 PG-B3 = 0x11 PG-X3 = 0x12 Communication Option: Register contains ASCII code of 1st and 3rd digit of the option card type number. Example: Register value is 5343H for “SC” if a SI-C3 option card is installed.
00B1H	Reserved	
00B2H	Option Code Connected to CN5-B	
00B3H	Option Code Connected to CN5-C	
00B4H	Reserved	
00B5H	Frequency Reference After Soft-starter (U1-16)	r/min units <4>
00B6H		0.01% units
00B7H	Frequency Reference	r/min <4>
00B8H		0.01% units
00B9H to 00BEH	Reserved	
00BFH	Lists the last to digits of operation error code oPE□□.	

Email: service@repairtw.com

Register No.	Contents	
00C0H	Fault contents 3	
	bit 1	Undervoltage (Uv1)
	bit 2	Control Power Supply Undervoltage (Uv2)
	bit 3	Soft Charge Circuit Fault (Uv3)
	bit 4	Reserved
	bit 5	Ground Fault (GF)
	bit 6	Overcurrent (oC)
	bit 7	Overvoltage (ov)
	bit 8	Heatsink Overheat (oH)
	bit 9	Heatsink Overheat (oH1)
	bit A	Motor Overload (oL1)
	bit B	Drive Overload (oL2)
	bit C	Overtorque Detection 1 (oL3)
	bit D	Overtorque Detection 2 (oL4)
	bit E	Dynamic Braking Transistor Fault (rr)
	bit F	Braking Resistor Overheat (rH)
00C1H	Fault contents 4	
	bit 0	External Fault at input terminal S3 (EF3)
	bit 1	External Fault at input terminal S4 (EF4)
	bit 2	External Fault at input terminal S5 (EF5)
	bit 3	External Fault at input terminal S6 (EF6)
	bit 4	External Fault at input terminal S7 (EF7)
	bit 5	External Fault at input terminal S8 (EF8)
	bit 6	Cooling Fan Error (FAn)
	bit 7	Overspeed (os)
	bit 8	Excessive Speed Deviation (dEv)
	bit 9	PG Disconnected (PGo)
	bit A	Input Phase Loss (PF)
	bit B	Output Phase Loss (LF)
	bit C	Motor Overheat (PTC input) (oH3)
	bit D	Digital Operator Connection Fault (oPr)
	bit E	EEPROM Write Error (Err)
	bit F	Motor Overheat Fault (PTC input) (oH4)
00C2H	Fault contents 5	
	bit 0	MEMOBUS/Modbus Communication Error (CE)
	bit 1	Option Communication Error (bUS)
	bit 2, 3	Reserved
	bit 4	Control Fault (CF)
	bit 5	Zero Servo Fault (SvE)
	bit 6	Option External Fault (EF0)
	bit 7	PID Feedback Loss (FbL)
	bit 8	Undertorque Detection 1 (UL3)
	bit 9	Undertorque Detection 2 (UL4)
	bit A	High Slip Braking Overload (oL7)
	bit B to E	Reserved
	bit F	Hardware Fault (includes oFx)
00C3H	Fault contents 6	
	bit 0	Reserved
	bit 1	Z Pulse Fall Detection (dv1)
	bit 2	Z Pulse Noise Fault Detection (dv2)
	bit 3	Inversion Detection (dv3)
	bit 4	Inversion Prevention Detection (dv4)
	bit 5	Current Imbalance (LF2)
	bit 6	Pullout Detection (STo)
	bit 7	PG Hardware Fault (PGoH)
	bit 8	SI-T3 Watchdog Error (E5)
	bit 9	Reserved
	bit A	Too many speed search restarts (SEr)
	bit B to F	Reserved

原廠維修有限公司
購買、維修、備手冊零組件
電話： 037-466333
Email: service@repairtw.com
Line id: @zzzz
www.repairtw.com

Register No.	Contents	
00C4H	Fault contents 7	
	bit 0	PID Feedback Loss (FbH)
	bit 1	External Fault 1, input terminal S1 (EF1)
	bit 2	External Fault 2, input terminal S2 (EF2)
	bit 3	Mechanical Weakening Detection 1 (oL5)
	bit 4	Mechanical Weakening Detection 2 (UL5)
	bit 5	Current Offset Fault (CoF)
	bit 6, 7	Reserved
	bit 8	DriveWorksEZ Fault (dWFL)
	bit 9 to B	Reserved
	bit C	Output Voltage Detection Fault (voF)
	bit D	Braking Resistor Fault (rF)
	bit E	Braking Transistor Overload Fault (boL)
	bit F	Reserved
00C5H	bit 0, 1	Reserved
	bit 2	Node Setup Fault (nSE)
	bit 3 to F	Reserved
00C6H, 00C7H	Reserved	
00C8H	Alarm contents 2	
	bit 0	Undervoltage (Uv)
	bit 1	Overvoltage (ov)
	bit 2	Heatsink Overheat (oH)
	bit 3	Drive Overheat (oH2)
	bit 4	Overtorque 1 (oL3)
	bit 5	Overtorque 2 (oL4)
	bit 6	Run Commands Input Error (EF)
	bit 7	Drive Baseblock (bb)
	bit 8	External Fault 3, input terminal S3 (EF3)
	bit 9	External Fault 4, input terminal S4 (EF4)
	bit A	External Fault 5, input terminal S5 (EF5)
	bit B	External Fault 6, input terminal S6 (EF6)
	bit C	External Fault 7, input terminal S7 (EF7)
	bit D	External Fault 8, input terminal S8 (EF8)
	bit E	Cooling Fan Error (FAn)
	bit F	Overspeed (oS)
00C9H	Alarm contents 3	
	bit 0	Excessive Speed Deviation (dEv)
	bit 1	PG Disconnected (PGo)
	bit 2	Digital Operator Connection Fault (oPr)
	bit 3	MEMOBUS/Modbus Communication Error (CE)
	bit 4	Option Communication Error (bUS)
	bit 5	Serial Communication Transmission Error (CALL)
	bit 6	Motor Overload (oL1)
	bit 7	Drive Overload (oL2)
	bit 8	Reserved
	bit 9	Option Card External fault (EF0)
	bit A	Motor 2 Switch command input during run (rUn)
	bit B	Reserved
	bit C	Serial Communication Transmission Error (CALL)
	bit D	Undertorque Detection 1 (UL3)
	bit E	Undertorque Detection 2 (UL4)
	bit F	MEMOBUS/Modbus Test Mode Fault (SE)
00CAH	Alarm contents 4	
	bit 0	Reserved
	bit 1	Motor Overheat 1 (PTC Input) (oH3)
	bit 2 to 5	Reserved
	bit 6	PID Feedback Loss (FbL)
	bit 7	PID Feedback Loss (FbH)
	bit 9	Drive Disabled (dnE)
	bit A	PG Disconnected (PGo)
	bit B to F	Reserved

昆盈科技有限公司
購買、銷售、進口伺服零組件
電話：037-466333
Email: service@repairtw.com
Line ID: @zzz
www.repairtw.com

Register No.	Contents	
00CBH	Alarm Contents 5	
	bit 0	SI-T3 Watchdog Error (E5)
	bit 1	SI-T3 Station Address Setting Error (AEr)
	bit 2	SI-T3 Comm. Cycle Setting Error (CyC)
	bit 3	High Current Alarm (HCA)
	bit 4	Cooling Fan Maintenance Time (LT-1)
	bit 5	Soft Charge Bypass Relay Maintenance Time (LT-2)
	bit 6	Reserved
	bit 7	SI-S EEPROM Error (EEP)
	bit 8	External Fault 1 (input terminal S1) (EF1)
	bit 9	External Fault 2 (input terminal S2) (EF2)
	bit A	Safe Disable Input (HbbF)
	bit B	Safe Disable Input (Hbb)
	bit C	Mechanical Weakening Detection 1 (oL5)
	bit D	Mechanical Weakening Detection 2 (UL5)
	bit E, F	Reserved
00CCH	Alarm Contents 6	
	bit 0	Output Voltage Detection Fault (VoF)
	bit 1	IGBT Maintenance Time (90%) (TrPC)
	bit 2	Capacitor Maintenance Time (LT-3)
	bit 3	IGBT Maintenance Time (50%) (LT-4)
	bit 4	Braking Transistor Overload Fault (boL)
	bit 5 to 7	Reserved
	bit 8	DriveWorksEZ Alarm (dWAL)
	bit 9 to F	Reserved
00CDH to 00CFH	Reserved	
00D0H	CPF Contents 1	
	bit 0, 1	Reserved
	bit 2	A/D Conversion Error (CPF02)
	bit 3	PWM Data Fault (CPF03)
	bit 4, 5	Reserved
	bit 6	EEPROM Memory Data Error (CPF06)
	bit 7	Terminal Board Connection Error (CPF07)
	bit 8	EEPROM Serial Communications Fault (CPF08)
	bit 9, A	Reserved
	bit B	RAM Fault (CPF11)
	bit C	FLASH Memory Fault (CPF12)
	bit D	Watchdog Circuit Exception (CPF13)
	bit E	Control Circuit Fault (CPF14)
	bit F	Reserved
00D1H	CPF Contents 2	
	bit 0	Clock Fault (CPF16)
	bit 1	Timing Fault (CPF17)
	bit 2	Control Circuit Fault (CPF18)
	bit 3	Control Circuit Fault (CPF19)
	bit 4	Hardware fault at power up (CPF20)
	bit 5	Hardware fault at communication start up (CPF21)
	bit 6	A/D Conversion Fault (CPF22)
	bit 7	PWM Feedback Fault (CPF23)
	bit 8	Drive Unit Signal Fault (CPF24)
	bit 9	Terminal board is not properly connected. (CPF25)
	bit A	ASIC BB Circuit Error (CPF26)
	bit B	ASIC PWM Setting Register Error (CPF27)
	bit C	ASIC PWM Pattern Error (CPF28)
	bit D	ASIC On-delay Error (CPF29)
	bit E	ASIC BBON Error (CPF30)
	bit F	ASIC Code Error (CPF31)
00D2H	bit 0	ASIC Start-up Error (CPF32)
	bit 1	Watch-dog Error (CPF33)
	bit 2	ASIC Power/Clock Error (CPF34)
	bit 3	External A/D Converter Error (CPF35)
	bit 4 to F	Reserved
00D3H to 00D7H	oFA0x Contents (CN5-A)	

有限公司
購買 維修 進口零組件
電話：
Email: service@repairtw.com
Line id: @228
www.repairtw.com

Register No.	Contents	
00D8H	oFA0x Contents (CN5-A)	
	bit 0	Option Compatibility Error (oFA00)
	bit 1	Option not properly connected (oFA01)
	bit 2	Same type of option card already connected (oFA02)
	bit 3, 4	Reserved
	bit 5	A/D Conversion Error (oFA05)
	bit 6	Option Response Error (oFA06)
	bit 7 to F	Reserved
00D9H	oFA1x Contents (CN5-A)	
	bit 0	Option RAM Fault (oFA10)
	bit 1	Option Operation Mode Fault (SLMOD) (oFA11)
	bit 2	Drive Receive CRC Error (oFA12)
	bit 3	Drive Receive Frame Error (oFA13)
	bit 4	Drive Receive Abort Error (oFA14)
	bit 5	Option Receive CRC Error (oFA15)
	bit 6	Option Receive Frame Error (oFA16)
	bit 7	Option Receive Abort Error (oFA17)
	bit 8 to F	Reserved
00DAH to 00DBH	Reserved	
00DBH	oFA3x Contents (CN5-A)	
	bit 0	Comm. ID Error (oFA30)
	bit 1	Model Code Error (oFA31)
	bit 2	Sumcheck Error (oFA32)
	bit 3	Comm. option timeout waiting for response (oFA33)
	bit 4	MEMOBUS Timeout (oFA34)
	bit 5	Drive timeout waiting for response (oFA35)
	bit 6	CI Check Error (oFA36)
	bit 7	Drive timeout waiting for response (oFA37)
	bit 8	Control Command Selection Error (oFA38)
	bit 9	Drive timeout waiting for response (oFA39)
	bit A	Control Response Selection 1 Error (oFA40)
	bit B	Drive timeout waiting for response (oFA41)
	bit C	Control Response Selection 2 Error (oFA42)
	bit D	Control Response Selection Error (oFA43)
	bit E, F	Reserved
00DCH	oFb0x Contents (CN5-B)	
	bit 0	Option compatibility error (oFb00)
	bit 1	Option not properly connected (oFb01)
	bit 2	Same type of option card already connected (oFb02)
	bit 3, 4	Reserved
	bit 5	A/D Conversion Fault (oFb05)
	bit 6	Option Response Error (oFb06)
	bit 7 to F	Reserved
00DDH	oFb1x Contents (CN5-B)	
	bit 0	Option RAM Fault (oFb10)
	bit 1	Option Operation Mode Fault (SLMOD) (oFb11)
	bit 2	Drive Receive CRC Error (oFb12)
	bit 3	Drive Receive Frame Error (oFb13)
	bit 4	Drive Receive Abort Error (oFb14)
	bit 5	Option Receive CRC Error (oFb15)
	bit 6	Option Receive Frame Error (oFb16)
	bit 7	Option Receive Abort Error (oFb17)
	bit 8 to F	Reserved
00DEH to 00DFH	Reserved	

Email: service@repairtw.com
www.repairtw.com

Register No.	Contents	
00E0H	oFb3x Contents (CN5-B)	
	bit 0	Comm. ID Error (oFb30)
	bit 1	Model Code Error (oFb31)
	bit 2	Sumcheck Error (oFb32)
	bit 3	Comm. option timeout waiting for response (oFb33)
	bit 4	MEMOBUS Timeout (oFb34)
	bit 5	Drive timeout waiting for response (oFb35)
	bit 6	CI Check Error (oFb36)
	bit 7	Drive timeout waiting for response (oFb37)
	bit 8	Control Command Selection Error (oFb38)
	bit 9	Drive timeout waiting for response (oFb39)
	bit A	Control Response Selection 1 Error (oFb40)
	bit B	Drive timeout waiting for response (oFb41)
	bit C	Control Response Selection 2 Error (oFb42)
	bit D	Control Response Selection Error (oFb43)
	bit E, F	Reserved
00E1H	oFC0x Contents (CN5-C)	
	bit 0	Option compatibility error (oFC00)
	bit 1	Option not properly connected (oFC01)
	bit 2	Same type of option card already connected (oFC02)
	bit 3, 4	Reserved
	bit 5	A/D Conversion Fault (oFC05)
	bit 6	Option Response Error (oFC06)
	bit 7 to F	Reserved
00E2H	oFC1x Contents (CN5-C)	
	bit 0	Option RAM Fault (oFC10)
	bit 1	Option Operation Mode Fault (SLMOD) (oFC11)
	bit 2	Drive Receive CRC Error (oFC12)
	bit 3	Drive Receive Frame Error (oFC13)
	bit 4	Drive Receive Abort Error (oFC14)
	bit 5	Option Receive CRC Error (oFC15)
	bit 6	Option Receive Frame Error (oFC16)
	bit 7	Option Receive Abort Error (oFC17)
	bit 8 to F	Reserved
00E3H, 00E4H	Reserved	
00E5H	oFC3x Contents (CN5-C)	
	bit 0	Comm. ID Error (oFC30)
	bit 1	Model Code Error (oFC31)
	bit 2	Sumcheck Error (oFC32)
	bit 3	Comm. option timeout waiting for response (oFC33)
	bit 4	MEMOBUS Timeout (oFC34)
	bit 5	Drive timeout waiting for response (oFC35)
	bit 6	CI Check Error (oFC36)
	bit 7	Drive timeout waiting for response (oFC37)
	bit 8	Control Command Selection Error (oFC38)
	bit 9	Drive timeout waiting for response (oFC39)
	bit A	Control Response Selection 1 Error (oFC40)
	bit B	Drive timeout waiting for response (oFC41)
	bit C	Control Response Selection 2 Error (oFC42)
	bit D	Control Response Selection Error (oFC43)
	bit E, F	Reserved
00E6H to 00FFH	Reserved	

上正科技有限公司
購買、維修 此手冊零組件
電話： 037-466333
Email: service@repairtw.com
Line id: @zzzz
www.repairtw.com

<1> Units are determined by parameter o1-03.
<2> This value's number of decimal places depends on the drive model and the Heavy/Normal duty selection in parameter C6-01. The value will have two decimal places (0.01 A) if the drive is set for a Maximum Applicable Motor Capacity up to 11 kW (refer to ***Table A.2*** and ***Table A.3***) and one decimal place (0.1 A) if the set Maximum Applicable Motor Capacity is higher than 11 kW.
<3> The contents of a communication error are saved until the fault is reset.
<4> Depending on the motor used, the correct motor pole number must be set to parameter E2-04, E4-04, or E5-05.

◆ Broadcast Messages

Data can be written from the master to all slave devices at the same time.

The slave address in a broadcast command message must be set to 00H. All slaves will receive the message, but will not respond.

Register No.	Contents	
0001H	Digital Input Command	
	bit 0	Forward Run (0: Stop 1: Run)
	bit 1	Direction Command (0: Forward, 1: Reverse)
	bit 2, 3	Reserved
	bit 4	External Fault
	bit 5	Fault Reset
	bit 6 to B	Reserved
	bit C	Multi-Function Digital Input S5
	bit D	Multi-Function Digital Input S6
	bit E	Multi-Function Digital Input S7
	bit F	Multi-Function Digital Input S8
0002H	Frequency Reference	30000/100%

◆ Fault Trace Contents

The table below shows the fault codes that can be read out by MEMOBUS/Modbus commands from the U2-□□ monitor parameters.

Table C.4 Fault Trace / History Register Contents

Fault Code	Fault Name	Fault Code	Fault Name
0002H	Undervoltage (Uv1)	0096H	Hardware fault at communication start up (CPF21)
0003H	Control Power Supply Undervoltage (Uv2)	0097H	A/D Conversion Fault (CPF22)
0004H	Soft Charge Circuit Fault (Uv3)	0098H	PWM Feedback Fault (CPF23)
0006H	Ground Fault (GF)	0099H	Drive Unit Signal Fault (CPF24)
0007H	Overcurrent (oC)	009AH	Terminal board is not properly connected. (CPF25)
0008H	Overvoltage (ov)	009BH	ASIC BB Circuit Error (CPF26)
0009H	Heatsink Overheat (oH)	009CH	ASIC PWM Setting Register Error (CPF27)
000AH	Heatsink Overheat (oH1)	009DH	ASIC PWM Pattern Error (CPF28)
000BH	Motor Overload (oL1)	009EH	ASIC On-Delay Error (CPF29)
000CH	Drive Overload (oL2)	009FH	ASIC BBON Error (CPF30)
000DH	Overtorque Detection 1 (oL3)	00A0H	ASIC Code Error (CPF31)
000EH	Overtorque Detection 2 (oL4)	00A1H	ASIC Start-p Error (CPF32)
000FH	Dynamic Braking Transistor (rr)	00A2H	Watch-dog Error (CPF33)
0010H	Braking Resistor Overheat (rH)	00A3H	ASIC Power/Clock Error (CPF34)
0011H	External Fault at input terminal S3 (EF3)	00A4H	External A/D Converter Error (CPF35)
0012H	External Fault at input terminal S4 (EF4)	0101H	Option compatibility error (oFA00)
0013H	External Fault at input terminal S5 (EF5)	0102H	Option not properly connected (oFA01)
0014H	External Fault at input terminal S6 (EF6)	0103H	Same type of option card already connected (oFA02)
0015H	External Fault at input terminal S7 (EF7)	0106H	A/D Conversion Error (oFA05)
0016H	External Fault at input terminal S8 (EF8)	0107H	Option Response Error (oFA06)
0018H	Overspeed (oS)	0111H	Option RAM Fault (oFA10)
0019H	Excessive Speed Deviation (dEv)	0112H	Option Operation Mode Fault (SLMOD) (oFA11)
001AH	PG Disconnect (PGo)	0113H	Drive Receive CRC Error (oFA12)
001BH	Input Phase Loss (PF)	0114H	Drive Receive Frame Error (oFA13)
001CH	Output Phase Loss (LF)	0115H	Drive Receive Abort Error (oFA14)
001DH	Motor Overheat (PTC input) (oH3)	0116H	Option Receive CRC Error (oFA15)
001EH	Digital Operator Connection (oPr)	0117H	Option Receive Frame Error (oFA16)
001FH	EEPROM Write Error (Err)	0118H	Option Receive Abort Error (oFA17)
0020H	Motor Overheat (PTC input) (oH4)	0131H	Comm. ID Error (oFA30)
0021H	MEMOBUS/Modbus Communication Error (CE)	0132H	Model Code Error (oFA31)
0022H	Option Communication Error (bUS)	0133H	Sumcheck Error (oFA32)
0025H	Control fault (CF)	0134H	Comm. option timeout waiting for response (oFA33)
0026H	Zero-Serve Fault (SvE)	0135H	MEMOBUS Timeout (oFA34)
0027H	Option External Fault (EF0)	0136H	Drive timeout waiting for response (oFA35)
0028H	PID Feedback Loss (FbL)	0137H	CI Check Error (oFA36)
0029H	Undertorque Detection 1 (UL3)	0138H	Drive timeout waiting for response (oFA37)
002AH	Undertorque Detection 2 (UL4)	0139H	Control Command Selection Error (oFA38)

上正科技有限公司
購買、維修 此手冊零組件
電話： 037-466333
Email: service@repairtw.com
Line id: @zzzz
www.repairtw.com

Fault Code	Fault Name	Fault Code	Fault Name
002BH	High Slip Braking Overload (oL7)	013AH	Drive timeout waiting for response (oFA39)
0030H	Hardware Fault (including oFx)	013BH	Control Response Selection 1 Error (oFA40)
0032H	Z Pulse Fall Detection (dv1)	013CH	Drive timeout waiting for response (oFA41)
0033H	Z Pulse Noise Fault Detection (dv2)	013DH	Control Response Selection 2 Error (oFA42)
0034H	Inversion Detection (dv3)	013EH	Control Response Selection Error (oFA43)
0035H	Inversion Prevention Detection (dv4)	0201H	Option Connection Error (oFb01)
0036H	Output Current Imbalance (LF2)	0202H	Same type of option card already connected (oFb02)
0037H	Pullout Detection (Sto)	0205H	A/D Conversion Error (oFb05)
0038H	PG Hardware Fault (PGoH)	0206H	Option Response Error (oFb06)
003BH	Too many speed search restarts (SEr)	0210H	Option RAM Fault (oFb10)
0041H	PID Feedback Loss (FbH)	0211H	Option Operation Mode Fault (SLMOD) (oFb11)
0042H	External Fault 1, input terminal S1 (EF1)	0212H	Drive Receive CRC Error (oFb12)
0043H	External Fault 2, input terminal S2 (EF2)	0213H	Drive Receive Frame Error (oFb13)
0044H	Mechanical Weakening Detection 1 (oL5)	0214H	Drive Receive Abort Error (oFb14)
0045H	Mechanical Weakening Detection 2 (UL5)	0215H	Option Receive CRC Error (oFb15)
0046H	Current Offset Fault (CoF)	0216H	Option Receive Frame Error (oFb16)
0047H	PLC Detection Error 1 (PE1)	0217H	Option Receive Abort Error (oFb17)
0048H	PLC Detection Error 2 (PE2)	0231H	Comm. ID Error (oFb30)
0049H	DriveWorksEZ Fault (dWFL)	0232H	Model Code Error (oFb31)
004DH	Output Voltage Detection Fault (voF)	0233H	Sumcheck Error (oFb32)
004EH	Braking Resistor Transistor Fault (rF)	0234H	Comm. option timeout waiting for response (oFb33)
004FH	Braking Transistor Overload Fault (boL)	0235H	MEMOBUS Timeout (oFb34)
0052H	Node Setup Fault (nSE)	0236H	Drive timeout waiting for response (oFb35)
0083H	A/D Conversion Error (CPF02)	0237H	CI Check Error (oFb36)
0084H	PWM Data Fault (CPF03)	0238H	Drive timeout waiting for response (oFb37)
0087H	EEPROM Memory Data Error (CPF06)	0239H	Control Command Selection Error (oFb38)
0088H	Terminal Board Connection Error (CPF07)	023AH	Drive timeout waiting for response (oFb39)
0089H	EEPROM Serial Communication Fault (CPF08)	023BH	Control Response Selection 1 Error (oFb40)
008CH	RAM Fault (CPF11)	023CH	Drive timeout waiting for response (oFb41)
008DH	Flash Memory Circuit Exception (CPF12)	023DH	Control Response Selection 2 Error (oFb42)
008EH	Watchdog Circuit Exception (CPF13)	023EH	Control Response Selection Error (oFb43)
008FH	Control Circuit Fault (CPF14)	0300H	Option Compatibility Error (oFC00)
0091H	Clock Fault (CPF16)	0301H	Option not properly connected (oFC01)
0092H	Timing Fault (CPF17)	0302H	Same type of option card already connected (oFC02)
0093H	Control Circuit Fault (CPF18)	0305H	A/D Conversion Error (oFC05)
0094H	Control Circuit Fault (CPF19)	0306H	Option Response Error (oFC06)
0095H	Hardware fault at power up (CPF20)		

上正科技有限公司
購買、維修 此手冊客組件
電話： 037-466333
Email: service@repairtw.com
Line id: @zzzz
www.repairtw.com

◆ Alarm Register Contents

The table below shows the alarm codes that can be read out from MEMOBUS/Modbus register 007FH.

Table C.5 Alarm Register 007FH Contents

Alarm Code	Fault Name	Alarm Code	Fault Name
0001H	Undervoltage (Uv)	0020H	MEMOBUS/Modbus Test Mode Fault (SE)
0002H	Overvoltage (ov)	0022H	Motor Overheat (oH3)
0003H	Heatsink Overheat (oH)	0027H	PID Feedback Loss (FbL)
0004H	Drive Overheat (oH2)	0028H	PID Feedback Loss (FbH)
0005H	Overtorque 1 (oL3)	002AH	Drive Disabled (dnE)
0006H	Overtorque 2 (oL4)	002BH	PG Disconnected (PGo)
0007H	Run commands input error (EF)	0031H	SI-T3 Watchdog Error (E5)
0008H	Drive Baseblock (bb)	0032H	SI-T3 Station Address Setting Error (AEr)
0009H	External Fault 3, input terminal S3 (EF3)	0033H	SI-T3 Comm. Cycle Setting Error (CyC)
000AH	External Fault 4, input terminal S4 (EF4)	0034H	High Current Alarm (HCA)
000BH	External Fault 5, input terminal S5 (EF5)	0035H	Cooling Fan Maintenance Time (LT-1)
000CH	External Fault 6, input terminal S6 (EF6)	0036H	Capacitor Maintenance Time (LT-2)
000DH	External Fault 7, input terminal S7 (EF7)	0038H	SI-S EEPROM Error (EEP)
000EH	External Fault 8, input terminal S8 (EF8)	0039H	External Fault (input terminal S1) (EF1)
000FH	Cooling Fan Error (FAN)	003AH	External Fault (input terminal S2) (EF2)
0010H	Overspeed (oS)	003BH	Safe Disable Input (HbbF)
0011H	Excessive Speed Deviation (dEv)	003CH	Safe Disable Input (Hbb)
0012H	PG Disconnected (PGo)	003DH	Mechanical Weakening Detection 1 (oL5)
0014H	MEMOBUS/Modbus Communication Error (CE)	003EH	Mechanical Weakening Detection 2 (UL5)
0015H	Option Communication Error (bUS)	003FH	PLC Alarm (PA1)
0016H	Serial Communication Transmission Error (CALL)	0040H	PLC Alarm (PA2)

Alarm Code	Fault Name	Alarm Code	Fault Name
0017H	Motor Overload (oL1)	0041H	Output Voltage Detection Fault (voF)
0018H	Drive Overload (oL2)	0042H	IGBT Maintenance Time (90%) (TrPC)
001AH	Option Card External Fault (EF0)	0043H	Soft Charge Bypass Relay Maintenance Time (LT-3)
001BH	Motor Switch command input during run (rUn)	0044H	IGBT Maintenance Time (50%) (LT-4)
001DH	Serial Communication Transmission Error (CALL)	0045H	Braking Transistor Overload (boL)
001EH	Undertorque Detection 1 (UL3)	0049H	DriveWorksEZ Alarm (dWAL)
001FH	Undertorque Detection 2 (UL4)		

上正科技有限公司
購買、維修 此手冊零組件
電話： 037-466333
Email: service@repairtw.com
Line id: @zzzz
www.repairtw.com

C.10 Enter Command

When writing parameters to the drive from the PLC using MEMOBUS/Modbus communication, parameter H5-11 determines if an Enter command must be issued to enable these parameters or not. This sections the types of Enter commands and how they work.

◆ Enter Command Types

The drive supports two types of Enter commands as shown in the table below. An Enter command is enabled by writing 0 to register number 0900H or 0910H. These registers can only be written to. An error will occur if the user attempts to read from these registers.

Table C.6 Enter Command Types

Register No.	Description
0900H	Writes data into the EEPROM (non-volatile memory) of the drive and enables the data in RAM at the same time. Parameter changes remain even if the power supply is cycled.
0910H	Writes data in the RAM only. Parameter changes are lost when the drive is shut off.

Note: Because the EEPROM can be written to a maximum of 100,000 times, refrain from writing to the EEPROM too often. The Enter command registers are write-only. Consequently, if these registers are read, then the register address will be invalid (Error code: 02H). An Enter command is not required if reference or broadcast data are sent to the drive.

◆ Enter Command Settings when Upgrading the Drive

When replacing earlier Yaskawa drive models with the A1000 and keeping the MEMOBUS/Modbus communications settings, parameter H5-11 needs to be set in accordance with how the Enter command was set up in the older drive. H5-11 determines if an Enter command is needed or not in order to activate parameter changes in the drive.

- If upgrading from a G7 or F7 series drive to an A1000, set parameter H5-11 to 0.
- If upgrading from a V7 series drive to an A1000, set parameter H5-11 to 1.

上正科技有限公司
購買、維修 此手冊零組件
電話： 037-466333
Email: service@repairtw.com
Line id: @zzzz
www.repairtw.com

■ H5-11 and the Enter Command

H5-11 Settings	H5-11 = 0	H5-11 = 1
Drive being replaced	G7, F7	V7
How parameter settings are enabled	When the Enter command is received from the master.	As soon as the value is changed.
Upper/lower limit check	Upper/lower limit check is performed, taking the settings of related parameters into account.	Checks only the upper/lower limits of the parameters that were changed.
Default value of related parameters	Not affected. The settings of related parameters remain unchanged. They must be changed manually if needed.	Default settings of related parameters are changed automatically.
Error handling when setting multiple parameters	Data is accepted even if one setting is invalid. The invalid setting will be discarded. No error message occurs.	Error occurs if only one setting is invalid. All data that was sent are discarded.

C.11 Communication Errors

◆ MEMOBUS/Modbus Error Codes

A list of MEMOBUS/Modbus errors appears below.

When an error occurs, remove whatever caused the error and restart communications.

Error Code	Error Name Cause
01H	Function Code Error
	• Attempted to set a function code from a PLC other than 03H, 08H, and 10H.
02H	Register Number Error
	• A register number specified in the command message does not exist. • Attempted to send a broadcast message using other register numbers than 0001H or 0002H.
03H	Bit Count Error
	• Read data or write data is greater than 16 bits. Invalid command message quantity. • In a write message, the "Number of Data Items" contained within the message does not equal twice the amount of data words (i.e., the total of Data 1+ Data 2, etc.).
21H	Data Setting Error
	• Control data or parameter write data is outside the allowable setting range. • Attempted to write a contradictory parameter setting.
22H	Write Mode Error
	• During run, the user attempted to write a parameter that cannot be written to during run. • During an EEPROM memory data error (CPF06), the master attempted to write to a parameter other than A1-00 to A1-05, E1-03, or o2-04. • Attempted to write to read-only data.
23H	DC Bus Undervoltage Write Error
	• During an undervoltage situation, the master attempted to write to parameters that cannot be written to during undervoltage.
24H	Write Error During Parameter Process
	• Master attempted writing to the drive while the drive was processing parameter data.

上正科技有限公司
購買、維修 此手冊零組件
電話： 037-466333
Email: service@repairtw.com
Line ID: @z222
www.repairtw.com

◆ Slave Not Responding

In the following situations, the slave drive will ignore the command message sent from the master, and not send a response message:

- When a communications error (overrun, framing, parity, or CRC-16) is detected in the command message.
- When the slave address in the command message and the slave address in the drive do not match (remember to set the slave address for the drive using H5-01).
- When the gap between two blocks (8 bit) of a message exceeds 24 bits.
- When the command message data length is invalid.

Note: If the slave address specified in the command message is 00H, all slaves execute the write function, but do not return response messages to the master.

C.12 Self-Diagnostics

The drive has a built-in self-diagnosing function of the serial communication interface circuits. To perform the self-diagnosis function, use the following procedure.

DANGER! *Electrical Shock Hazard. Do not connect or disconnect wiring while the power is on. Failure to comply will result in death or serious injury. Before servicing, disconnect all power to the equipment. The internal capacitor remains charged even after the power supply is turned off. The charge indicator LED will extinguish when the DC bus voltage is below 50 Vdc. To prevent electric shock, wait at least one minute after all indicators are OFF and measure the DC bus voltage level to confirm safe level.*

1. Turn on the power to the drive.
2. Note the present terminal S6 function selection setting (H1-06) and set it for the communications test mode (H1-06 = 67).
3. Turn off the power to the drive.

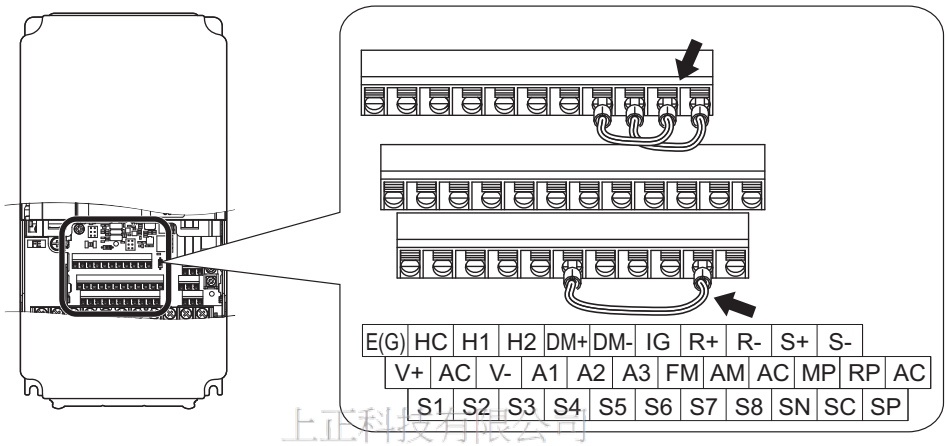

上正科技有限公司
購買、維修 此手冊參照件
電話： 037-466333
Email: service@repairtw.com
Line id: @zzzz
www.repairtw.com

Figure C.8 Terminal Connections for Communication Self-Diagnostics

4. With the power off, wire the drive as shown in the following diagram, connecting terminals R+ and S+, R- and S-, and S6 and SC.
5. Set jumper S3 to source mode (internal power supply).
6. Turn the power to the drive back on.
7. During normal operation, the drive will display PASS. This indicates that the communications test mode is operating normally.
   When a fault occurs, the drive will display CE on the keypad display.
8. Turn off the power supply.
9. Remove the wire jumpers from terminal R+, R-, S+, S-, and S6-SC. Set back jumper S3 to its original position. Set terminal S6 to its original function.
10. Return to normal operation.

上正科技有限公司
購買、維修 此手冊零組件
電話： 037-466333
Email: service@repairtw.com
Line id: @zzzz
www.repairtw.com

Appendix: D

Standards Compliance

This appendix explains the guidelines and criteria for maintaining CE and UL standards.

D.1 SECTION SAFETY 508
D.2 EUROPEAN STANDARDS 510
D.3 UL STANDARDS 515
D.4 SAFE DISABLE INPUT FUNCTION 518

上正科技有限公司
購買、維修 此手冊零組件
電話： 037-466333
Email: service@repairtw.com
Line id: @zzzz
www.repairtw.com

D.1 Section Safety

⚠ DANGER

Electrical Shock Hazard

Do not connect or disconnect wiring while the power is on.

Failure to comply will result in death or serious injury.

⚠ WARNING

Electrical Shock Hazard

Do not operate equipment with covers removed.

Failure to comply could result in death or serious injury.

The diagrams in this section may show drives without covers or safety shields to show details. Be sure to reinstall covers or shields before operating the drives and run the drives according to the instructions described in this manual.

Always ground the motor-side grounding terminal.

Improper equipment grounding could result in death or serious injury by contacting the motor case.

Do not touch any terminals before the capacitors have fully discharged.

Failure to comply could result in death or serious injury.

Before wiring terminals, disconnect all power to the equipment. The internal capacitor remains charged even after the power supply is turned off. After shutting off the power, wait for at least the amount of time specified on the drive before touching any components.

亞亞科技有限公司
購買、維修此手冊零組件
電話： 037-466333
Email: service@repairtw.com
Line Id: @zzzz
www.repairtw.com

Do not allow unqualified personnel to perform work on the drive.

Failure to comply could result in death or serious injury.

Installation, maintenance, inspection, and servicing must be performed only by authorized personnel familiar with installation, adjustment and maintenance of AC drives.

Do not perform work on the drive while wearing loose clothing, jewelry or without eye protection.

Failure to comply could result in death or serious injury.

Remove all metal objects such as watches and rings, secure loose clothing, and wear eye protection before beginning work on the drive.

Do not remove covers or touch circuit boards while the power is on.

Failure to comply could result in death or serious injury.

⚠ WARNING

Fire Hazard

Tighten all terminal screws to the specified tightening torque.

Loose electrical connections could result in death or serious injury by fire due to overheating of electrical connections.

Do not use an improper voltage source.

Failure to comply could result in death or serious injury by fire.

Verify that the rated voltage of the drive matches the voltage of the incoming power supply before applying power.

Do not use improper combustible materials.

Failure to comply could result in death or serious injury by fire.

Attach the drive to metal or other noncombustible material.

NOTICE

Observe proper electrostatic discharge procedures (ESD) when handling the drive and circuit boards.

Failure to comply may result in ESD damage to the drive circuitry.

Never connect or disconnect the motor from the drive while the drive is outputting voltage.

Improper equipment sequencing could result in damage to the drive.

Do not use unshielded wire for control wiring.

Failure to comply may cause electrical interference resulting in poor system performance. Use shielded twisted-pair wires and ground the shield to the ground terminal of the drive.

Do not allow unqualified personnel to use the product.

Failure to comply could result in damage to the drive or braking circuit.

Carefully review instruction manual TOBPC72060000 when connecting a braking option to the drive.

Do not modify the drive circuitry.

Failure to comply could result in damage to the drive and will void warranty.

Yaskawa is not responsible for modification of the product made by the user. This product must not be modified.

Check all the wiring to ensure that all connections are correct after installing the drive and connecting other devices.

Failure to comply could result in damage to the drive.

上正科技有限公司
購買、維修 此手冊零組件
電話： 037-466333
Email: service@repairtw.com
Line Id: @zzzz
www.repairtw.com

D.2 European Standards



Figure D.1 CE Mark

The CE mark indicates compliance with European safety and environmental regulations. It is required for engaging in business and commerce in Europe.

European standards include the Machinery Directive for machine manufacturers, the Low Voltage Directive for electronics manufacturers, and the EMC guidelines for controlling noise.

This drive displays the CE mark based on the EMC guidelines and the Low Voltage Directive.

- **Low Voltage Directive:** 2006/95/EC
- **EMC Guidelines:** 2004/108/EC

Devices used in combination with this drive must also be CE certified and display the CE mark. When using drives displaying the CE mark in combination with other devices, it is ultimately the responsibility of the user to ensure compliance with CE standards. After setting up the device, verify that conditions meet European standards.

◆ CE Low Voltage Directive Compliance

This drive has been tested according to European standard IEC61800-5-1, and it fully complies with the Low Voltage Directive.

To comply with the Low Voltage Directive, be sure to meet the following conditions when combining this drive with other devices:

上正科技有限公司
購買、維修 此手冊零組件
電話： 037-466333
Email: service@repairtw.com
Line id: @zzzz
www.repairtw.com

■ Area of Use

Do not use drives in areas with pollution higher than severity 2 and overvoltage category 3 in accordance with IEC664.

■ Installing Fuses on the Input Side

Always install fuses at the drive input side. Refer to *Installing Input Fuses on page 385* for selecting fuses.

■ Guarding Against Harmful Materials

When installing IP00 enclosure drives, use an enclosure that prevents foreign material from entering the drive from above or below.

■ Grounding

The drive is designed to be used in T-N (grounded neutral point) networks. If installing the drive in other types of grounded systems, contact your Yaskawa representative for instructions.

◆ EMC Guidelines Compliance

This drive is tested according to European standards EN61800-3: 2004, and complies with the EMC guidelines.

■ EMC Filter Installation

The following conditions must be met to ensure continued compliance with guidelines. *Refer to EMC Filters on page 513* for EMC filter selection.

Installation Method

Verify the following installation conditions to ensure that other devices and machinery used in combination with this drive also comply with EMC guidelines.

1. Install an EMC noise filter to the input side specified by Yaskawa for compliance with European standards.
2. Place the drive and EMC noise filter in the same enclosure.
3. Use braided shield cable for the drive and motor wiring, or run the wiring through a metal conduit.

4. Keep wiring as short as possible. Ground the shield on both the drive side and the motor side.

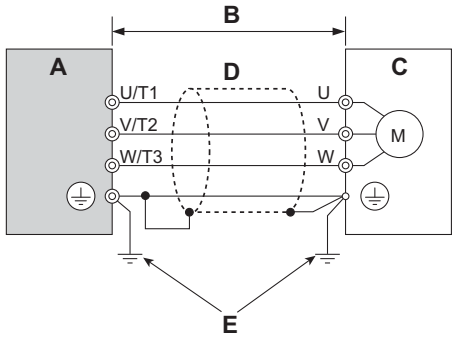

A – Drive
B – 10 m max cable length between drive and motor
C – Motor
D – Metal conduit
E – Ground wire should be as short as possible.

Figure D.2 Installation Method

5. Ground the largest possible surface area of the shield to the metal conduit when using braided shield cable. Yaskawa recommends using a cable clamp.

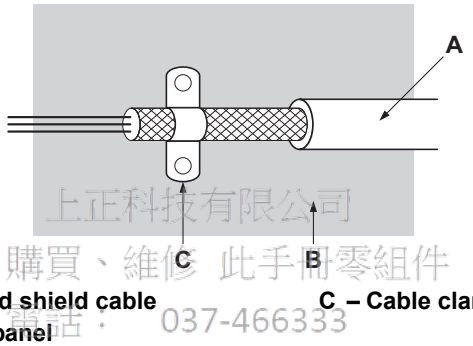

A – Braided shield cable
B – Metal panel
C – Cable clamp (conductive)

Figure D.3 Ground Area

6. Connect a DC reactor to minimize harmonic distortion. See page *514*.

上正科技有限公司
購買、維修 此手冊零組件
電話： 037-466333
Email: service@repairtw.com
Line id: @zzzz
www.repairtw.com

Three-Phase 200 V / 400 V Class

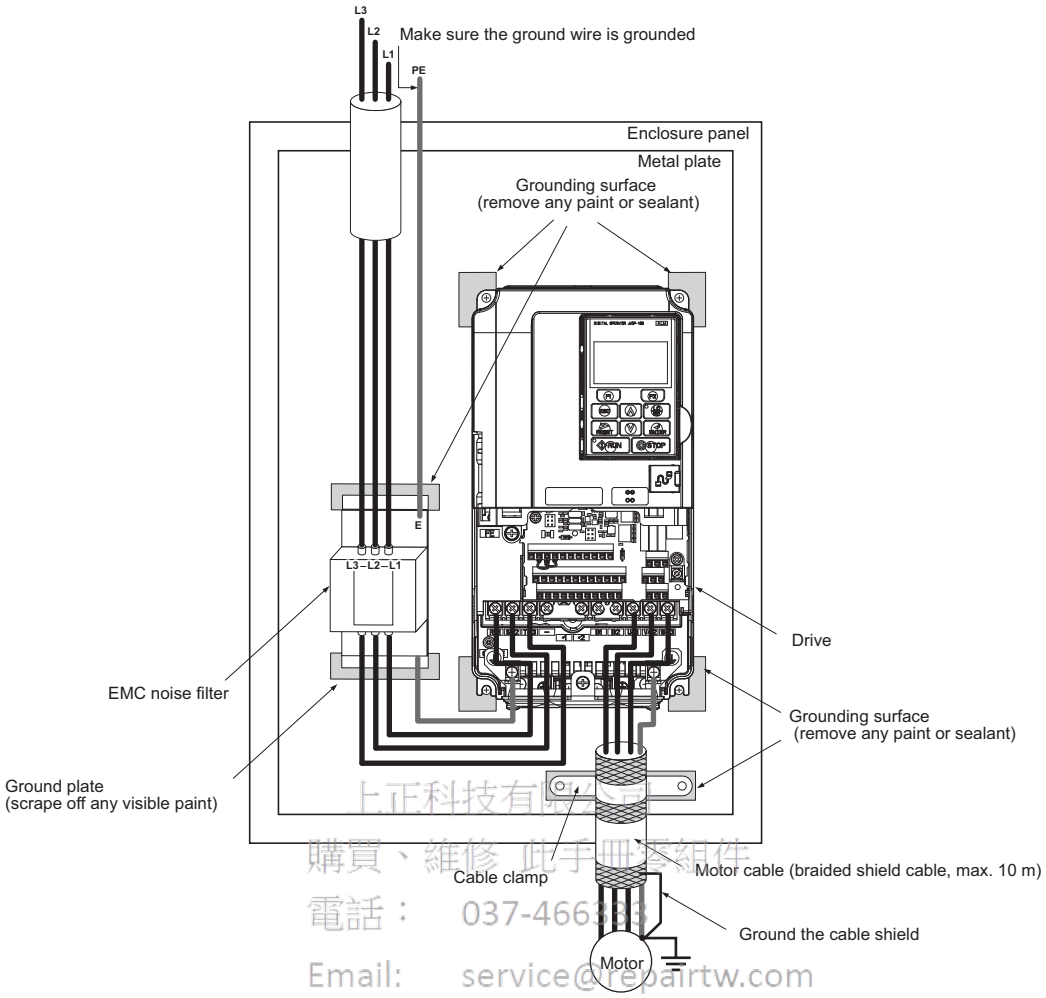

上正科技有限公司
購買、維修 此手冊零組件
電話： 037-466388
Email: service@repairtw.com
Line id: @zzzz
www.repairtw.com

A – Ground the cable shield
B – Enclosure panel
C – Metal plate
D – Grounding surface (remove any paint or sealant)
E – Drive
F – Motor cable (braided shield cable, max. 10 m)
G – Motor
H – Cable clamp
I – Ground plate (scrape off any visible paint)
J – EMC noise filter
K – Make sure the ground wire is grounded

Figure D.4 EMC Filter and Drive Installation for CE Compliance (Three-Phase 200 V / 400 V Class)

■ EMC Filters

The drive should be installed with the EMC filters listed below in order to comply with the EN61800-3 requirements.

Note: If the Safe Disable function of the drive is part of the safety concept of a machine or installation and used for a safe stop according to EN60204-1, stop category 0, use only filters manufactured by Schaffner as listed below.

Table D.1 EN61800-3 Filters

Model CIMR-A□	Filter Data (Manufacturer: Schaffner)					
	Type	Rated Current (A)	Weight (kg)	Dimensions [W x D x H] (mm)	Y x X	Figure
Three-Phase 200 V Class						
2A0004	FS5972-10-07	10	1.2	141 × 46 × 330	115 × 313	1
2A0006						
2A0010	FS5972-18-07	18	1.3	141 × 46 × 330	115 × 313	
2A0012						
2A0021	FS5972-35-07	35	2.1	206 × 50 × 355	175 × 336	
2A0030						
2A0040	FS5972-60-07	60	4.0	236 × 65 × 408	205 × 390	
2A0056						
2A0069	FS5972-100-35	100	3.4	90 × 150 × 330	65 × 255	2
2A0081						
2A0110	FS5972-170-40	170	6.0	120 × 170 × 451	102 × 365	
2A0138						
2A0169	FS5972-250-37	250	11.7	130 × 240 × 610	90 × 498	
2A0211						
2A0250	FS5972-410-99	410	10.5	260 × 115 × 386	235 × 120	3
2A0312						
2A0360	FS5972-600-99	600	11	260 × 135 × 386	235 × 120	
2A0415						
Three-Phase 400 V Class						
4A0002	FS5972-10-07	10	1.1	141 × 46 × 330	115 × 313	1
4A0004						
4A0005						
4A0007						
4A0009	FS5972-18-07	18	1.7	141 × 46 × 330	115 × 313	
4A0011						
4A0018	FS5972-35-07	35	2.1	206 × 50 × 355	175 × 336	
4A0023						
4A0031						
4A0038	FS5972-60-07	60	4	236 × 65 × 408	202 × 390	
4A0044						
4A0058						
4A0072	FS5972-100-35	100	3.4	90 × 150 × 330	65 × 255	2
4A0088						
4A0103	FS5972-170-35	170	4.7	120 × 170 × 451	102 × 365	
4A0139						
4A0165						
4A0208	FS5972-250-37	250	11.7	130 × 240 × 610	90 × 498	
4A0250	FS5972-410-99	400	10.5	260 × 115× 386	235 × 120	3
4A0296						
4A0362						
4A0414	FS5972-600-99	600	11	260 × 135× 386	235 × 120	
4A0515						
4A0675	FS5972-800-99	800	31.5	300 × 160 × 716	275 × 210	

上亞科技有限公司
購買、維修此零組件
電話： 037-466333
Email: service@repairtw.com
Line id: @zzzz
www.repairtw.com

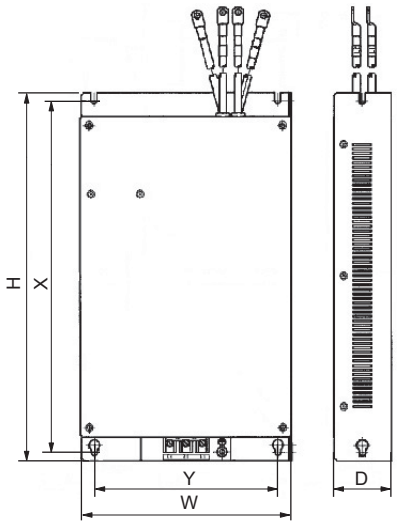

Figure 1

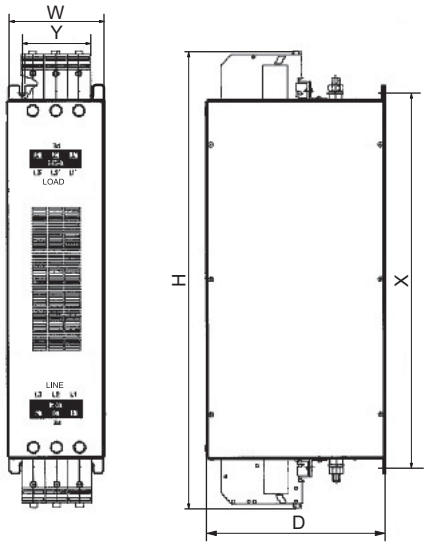

Figure 2

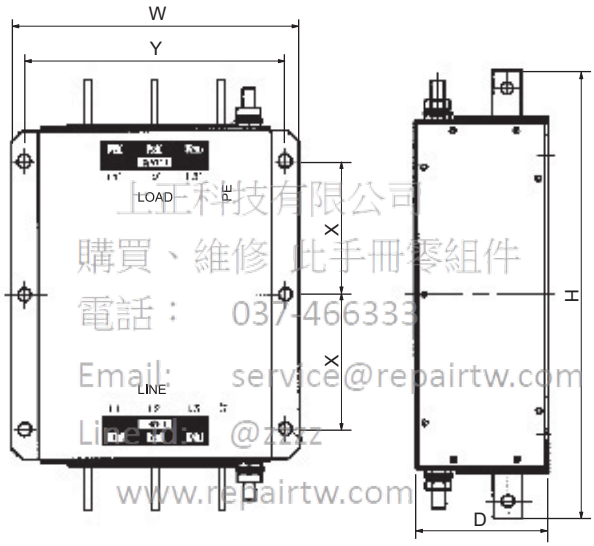

上正科技有限公司
購買、維修 此手冊零組件
電話： 037466333
Email: service@repairtw.com
Line ID: @zhz
www.repairtw.com

Figure 3

Figure D.5 EMC Filter Dimensions

■ DC Reactors for EN 61000-3-2 Compliance

Table D.2 DC Reactors for Harmonics Reduction

Drive Model CIMR-A□	DC Reactor	
	Model	Rating
200V Three-Phase Units		
2A0004	UZDA-B	5.4 A 8 mH
2A0006		
400 V Three-Phase Units		
4A0002	UZDA-B	3.2 A 28 mH
4A0004		

Note: Contact Yaskawa for information about DC reactors for other models.

D.3 UL Standards

The UL/cUL mark applies to products in the United States and Canada. It indicates that UL has performed product testing and evaluation, and determined that their stringent standards for product safety have been met. For a product to receive UL certification, all components inside that product must also receive UL certification.



Figure D.6 UL/cUL Mark

◆ UL Standards Compliance

This drive is tested in accordance with UL standard UL508C and complies with UL requirements. The conditions described below must be met to maintain compliance when using this drive in combination with other equipment:

■ Installation Area

Do not install the drive to an area greater than pollution severity 2 (UL standard).

■ Main Circuit Terminal Wiring

Cable Connectors

Yaskawa recommends using UL-listed copper wires (rated at 75°C), and closed-loop connectors or CSA-certified ring connectors sized for the selected wire gauge to maintain proper clearances when wiring the drive. Use the correct crimp tool to install connectors per manufacturer recommendation. *Table D.3* lists a suitable closed-loop connector manufactured by JST Corporation.

上可科技有限公司
購買、維修 此手冊零組件
電話： 037-466333
Email: service@repairtw.com
Line id: @zzzz
www.repairtw.com

Table D.3 Closed-Loop Crimp Terminal Size (JIS C 2805) (same for 200 V and 400 V)

Wire Gauge mm² (AWG)	Terminal Screws	Crimp Terminal Model Numbers	Tightening Torque N·m (lb·in.)
0.75 (18)	M3.5	R1.25-3.5	0.8 to 1.0 (7.1 to 8.9)
	M4	R1.25-4	1.2 to 1.5 (10.6 to 13.3)
1.25 (16)	M3.5	R1.25-3.5	0.8 to 1.0 (7.1 to 8.9)
	M4	R1.25-4	1.2 to 1.5 (10.6 to 13.3)
2 (14)	M3.5	R2-3.5	0.8 to 1.0 (7.1 to 8.9)
	M4	R2-4	1.2 to 1.5 (10.6 to 13.3)
	M5	R2-5	2.0 to 2.5 (17.7 to 22.1)
	M6	R2-6	4.0 to 5.0 (35.4 to 44.3)
3.5/5.5 (12/10)	M4	R5.5-4	1.2 to 1.5 (10.6 to 13.3)
	M5	R5.5-5	2.0 to 2.5 (17.7 to 22.1)
	M6	R5.5-6	4.0 to 5.0 (35.4 to 44.3)
	M8	R5.5-8	9.0 to 11.0 (79.7 to 97.4)
8 (8)	M4	8-4	1.2 to 1.5 (10.6 to 13.3)
	M5	R8-5	2.0 to 2.5 (17.7 to 22.1)
	M6	R8-6	4.0 to 5.0 (35.4 to 44.3)
	M8	R8-8	9.0 to 11.0 (79.7 to 97.4)
14 (6)	M4	14-4 <1>	1.2 to 1.5 (10.6 to 13.3)
	M5	R14-5	2.0 to 2.5 (17.7 to 22.1)
	M6	R14-6	4.0 to 5.0 (35.4 to 44.3)
	M8	R14-8	9.0 to 11.0 (79.7 to 97.4)
22 (4)	M10	R22-10	18.0 to 23.0 (159.0 to 204.0)
	M12	R22-12	32.0 to 40.0 (284.0 to 354.0)
30/38 (3/2)	M12	R38-12	32.0 to 40.0 (284.0 to 354.0)
50/60 (1/ 1/0)	M12	R60-12	32.0 to 40.0 (284.0 to 354.0)
80 (2/0)	M12	R80-12	32.0 to 40.0 (284.0 to 354.0)
100 (4/0)	M12	R100-12	32.0 to 40.0 (284.0 to 354.0)
150 (250/300MCM)	M10	150-10	18.0 to 23.0 (159.0 to 204.0)
	M12	150-12	32.0 to 40.0 (284.0 to 354.0)
200 (400MCM)	M10	200-10	18.0 to 23.0 (159.0 to 204.0)
	M12	R200-12	32.0 to 40.0 (284.0 to 354.0)
325 (600/650MCM)	M12	325-12	32.0 to 40.0 (284.0 to 354.0)

<1> Use the specified crimp terminals (Model 14.NK4) when using CIMR-A□2A0030, 2A0040, 4A0018, and 4A0023 with 14 mm² (6 AWG).

Note: Use crimp insulated terminals or insulated shrink tubing for wiring connections. Wires should have a continuous maximum allowable temperature of 75°C 600 Vac UL-approved vinyl-sheathed insulation.

Input Fuse Installation

Always install fuses at the drive input side. Refer to *Installing Input Fuses on page 385* for selecting fuses.

■ Low Voltage Wiring for Control Circuit Terminals

Wire low voltage wires with NEC Class 1 circuit conductors. Refer to national state or local codes for wiring. Use a class 2 (UL listed) power supply for the control circuit terminal when not using the drives internal control power supply.

Table D.4 Control Circuit Terminal Power Supply

Input / Output	Terminal Signal	Power Supply Specifications
Multi-function digital inputs	S1, S2, S3, S4, S5, S6, S7, S8, SC	Use the internal control power supply of the drive or an external class 2 power supply.
Multi-function analog inputs	+V, –V, A1, A2, A3, AC	
Pulse train input	RP, AC	
Pulse train output	MP, AC	
Safe disable inputs	H1, H2, HC	
Safe disable outputs	DM+, DM-	Requires class 2 power supply

■ Drive Short-Circuit Rating

This drive has undergone the UL short-circuit test, which certifies that during a short circuit in the power supply, the current flow will not rise above 100,000 amps at 240 V for 200 V class drives and 480 V for 400 V class drives.

- The MCCB, breaker protection, and fuse ratings shall be equal to or greater than the short-circuit tolerance of the power supply being used.
- Suitable for use on a circuit capable of delivering not more than 100,000 RMS symmetrical amperes for 240 V in 200 V class drives (up to 480 V for 400 V class drives) motor overload protection.

上正科技有限公司
購買、維修 此手冊零組件
電話: 037-466333
Email: service@repairtw.com
Line id: @zzzz
www.repairtw.com

◆ Drive Motor Overload Protection

Set parameter E2-01 (motor rated current) to the appropriate value to enable motor overload protection. The internal motor overload protection is UL listed and in accordance with the NEC and CEC.

■ E2-01 Motor Rated Current

Setting Range: Model Dependent

Default Setting: Model Dependent

Parameter E2-01 (motor rated current) protects the motor if parameter L1-01 is not set to 0 (default is 1, enabling protection for standard induction motors).

If Auto-Tuning has been performed successfully, the motor data entered to T1-04 is automatically written into parameter E2-01. If Auto-Tuning has not been performed, manually enter the correct motor rated current to parameter E2-01.

■ L1-01 Motor Overload Protection Selection

The drive has an electronic overload protection function (oL1) based on time, output current, and output frequency, which protects the motor from overheating. The electronic thermal overload function is UL-recognized, so it does not require an external thermal relay for single motor operation.

This parameter selects the motor overload curve used according to the type of motor applied.

Table D.5 Overload Protection Settings

Setting	Description	
0	Disabled	Disabled the drive's internal motor overload protection.
1	Standard fan cooled motor (default)	Selects protection characteristics for a standard self cooled motor with limited cooling capabilities when running below the rated speed. The motor overload detection level (oL1) is automatically reduces when running below the motor rated speed.
2	Drive duty motor with a speed range of 1:10	Selects protection characteristics for a motor with self-cooling capability within a speed range of 10:1. The motor overload detection level (oL1) is automatically reduced when running below 1/10 of the motor rated speed.
3	Vector motor with a speed range of 1:100	Selects protection characteristics for a motor capable of cooling itself at any speed — including zero speed (externally cooled motor). The motor overload detection level (oL1) is constant over the entire speed range.

Setting	Description	
4	Permanent Magnet motor with variable torque	Selects protection characteristics for a variable torque PM motor. The motor overload detection level (oL1) is automatically reduces when running below the motor rated speed.
5	Permanent Magnet motor with constant torque	Selects protection characteristics for a constant torque PM motor. The motor overload detection level (oL1) is constant over the whole speed range.
6	Standard fan cooled motor (50 Hz)	Selects protection characteristics for a standard self cooled motor with limited cooling capabilities when running below the rated speed. The motor overload detection level (oL1) is automatically reduces when running below the motor rated speed.

When connecting the drive to more than one motor for simultaneous operation, disable the electronic overload protection (L1-01 = 0) and wire each motor with its own motor thermal overload relay.

Enable the motor overload protection (L1-01 = 1 to 5) when connecting the drive to a single motor, unless another motor overload preventing device is installed. The drive electronic thermal overload function causes an oL1 fault, which shuts off the output of the drive and prevents additional overheating of the motor. The motor temperature is continually calculated as long as the drive is powered up.

■ L1-02 Motor Overload Protection Time

Setting Range: 0.1 to 5.0 min

Factory Default: 1.0 min

Parameter L1-02 determines how long the motor is allowed to operate before the oL1 fault occurs when the drive is running at 60 Hz and at 150% of the full load amp rating (E2-01) of the motor. Adjusting the value of L1-02 can shift the set of oL1 curves up the y axis of the diagram below, but will not change the shape of the curves.

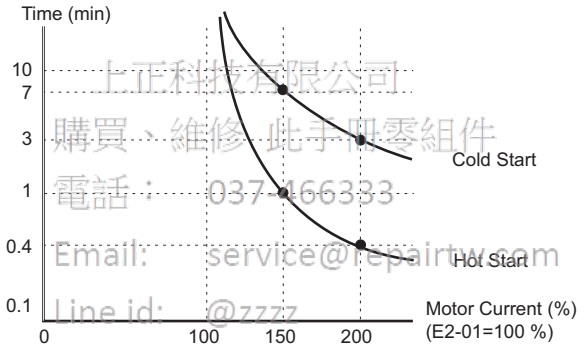

上正科技有限公司
購買、維修此手冊零組件
電話： 037-166333
Email: service@repairtw.com
Line id: @zzzz
www.repairtw.com

Figure D.7 Motor Overload Protection Time

D.4 Safe Disable Input Function

◆ Specifications

Inputs / Outputs		Two Safe Disable inputs and 1 EDM output according to EN61800-5-1, EN954-1/ISO13849 Cat. 3, IEC/EN61508 SIL2, Insulation coordination: class 1.
Operation Time		Time from input open to drive output stop is less than 1 ms.
Failure Probability	**Demand Rate Low**	PFD = $5.15E^{-5}$
	Demand Rate High/ Continuous	PFH = $1.2E^{-9}$
Performance Level		The Safe Disable Inputs satisfy all requirements of Performance Level (PL) d according to ISO13849-1. (Note: DC from EDM considered.)

◆ Precautions

DANGER! *Improper use of the Safe Disable function can result in serious injury or even death. Make sure the whole system or machinery that the Safe Disable function is used in complies with safety requirements. When implementing the Safe Disable function into the safety system of a machine, a thorough risk assessment for the whole system has to be carried out to assure it complies with relevant safety norms (e.g., EN954/ISO13849, IEC61508, EN/IEC62061,...).*

DANGER! *When using a PM motor, even if the drive output is shut off by the Safe Disable function, a break down of two output transistors can cause current to flow through the motor winding, resulting in a rotor movement for a maximum angle of 180 degree (electrically). Make sure such a situation would have no effect on the safety of the application when using the Safe Disable function. This is not a concern with induction motors.*

DANGER! *The Safe Disable function can switch off the drive output, but does not cut the drive power supply and cannot electrically isolate the drive output from the input. Always shut off the drive power supply when performing maintenance or installations on the drive input side as well as the drive output side.*

DANGER! *When using the Safe Disable inputs, make sure to remove the wire links between terminals H1, H2, and HC that were installed prior to shipment. Failing to do so will keep the Safe Disable circuit from operating properly and can cause injury or even death.*

DANGER! *All safety features (including Safe Disable) should be inspected daily and periodically. If the system is not operating normally, there is a risk of serious personal injury.*

DANGER! *Only a qualified technician with a thorough understanding of the drive, the instruction manual, and safety standards should be permitted to wire, inspect, and maintain the Safe Disable input.*

NOTICE: *From the moment terminal inputs H1 and H2 have opened, it takes up to 1 ms for drive output to shut off completely. The sequence set up to trigger terminals H1 and H2 should make sure that both terminals remain open for at least 1 ms in order to properly interrupt drive output.*

NOTICE: *The Safe Disable Monitor (output terminals DM+ and DM-) should not be used for any other purpose than to monitor the Safe Disable status or to discover a malfunction in the Safe Disable inputs. The monitor output is not considered a safe output.*

When utilizing the Safe Disable function, use only the EMC filters recommended in *.EMC Filters on page 513*

◆ Using the Safe Disable Function

The Safe Disable inputs provide a stop function in compliance with Stop Category 0 as defined in the EN60204-1 (uncontrolled stop by power removal), and “Safe Torque Off” as defined in the IEC61800-5-2. Safe Disable inputs have been designed to meet the requirements of the EN954-1/ISO13849-1, Category 3 and EN61508, SIL2.

A Safe Disable Status Monitor for error detection in the safety circuit is also provided.

■ Safe Disable Circuit

The Safe Disable circuit consists of two independent input channels that can block the output transistors. In addition, it provides a monitoring channel that indicates the status of those two input channels.

The input can either use the drive internal power supply or an external power supply. Both modes, Sink mode and Source mode are supported. The mode that is selected for the digital input terminals S1 to S8 by switch S3 will also be used for the Safe Disable inputs. Refer to *Sinking/Sourcing Mode Selection for Safe Disable Inputs on page 77*.

The Safe Disable Monitor uses a single channel photocoupler output. Refer to *Output Terminals on page 73* for signal specifications when using this output.

購買、維修 此手冊零組件
電話： 037-466333
Email: service@repairtw.com
www.repairtw.com

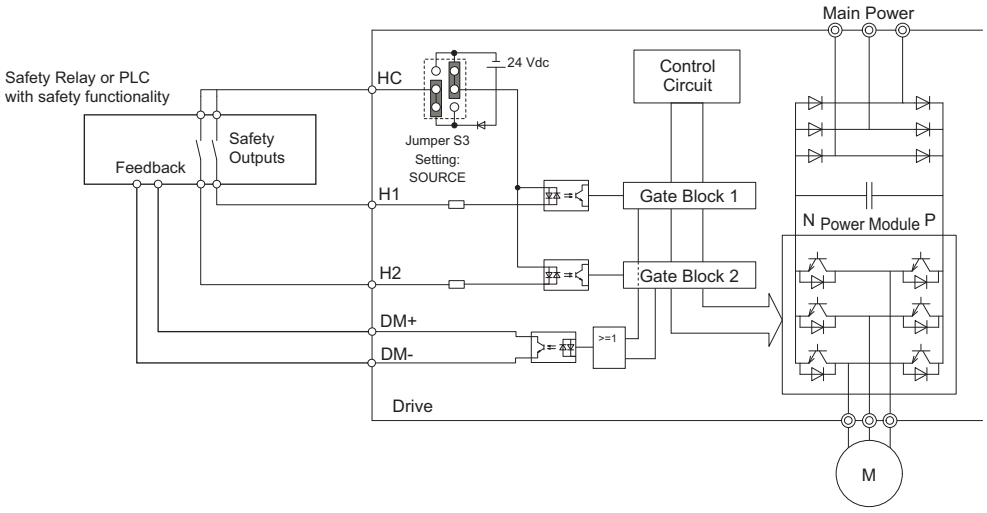

Figure D.8 Safe Disable Function Wiring Example (Source Mode)

■ Disabling and Enabling the Drive Output ("Safe Torque Off")

Figure D.9 illustrates the Safe Disable input operation.

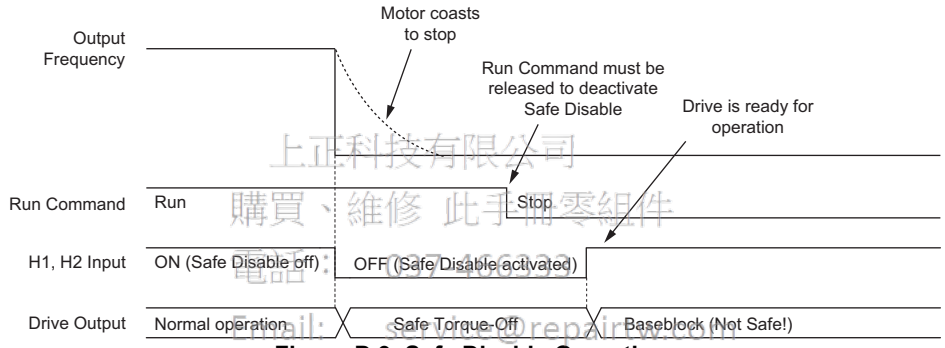

上正科技有限公司
購買、維修 此手冊零組件
電話: 037-466333
Email: service@repairtw.com
Line id: @zzzz
www.repairtw.com

Figure D.9 Safe Disable Operation

Entering the "Safe Torque Off" State

Whenever either one Safe Disable input or both inputs open, the motor torque is shut off by switching off the drive output. If the motor was running before the Safe Disable inputs opened, then the motor will coast to stop, regardless of the stopping method set in parameter b1-03.

Notice that the "Safe Torque Off" state can only be achieved using the Safe Disable function. Removing the Run command stops the drive and shuts the output off (baseblock), but does not create a "Safe Torque Off" status.

Note: To avoid an uncontrolled stop during normal operation, make sure that the Safe Disable inputs are opened first when the motor has completely stopped.

Returning to Normal Operation after Safe Disable

The Safe Disable function can only be deactivated when a Run command is not active.

When Safe Disable was activated during stop, normal operation can be resumed by simply turning on both Safe Disable inputs (i.e., by deactivating "Safe Torque Off").

When Safe Disable was activated during run, first the Run command has to be removed and then the Safe Disable inputs have to be turned on before the drive can be restarted.

■ Safe Disable Monitor Output Function and Digital Operator Display

Table D.6 explains the drive output and Safe Disable monitor state depending on the Safe Disable inputs.

Table D.6 Safety Input and EDM Terminal Status

Safe Disable Input Status		Safe Disable Status Monitor, DM+ - DM-	Drive Output Status	Digital Operator Display
Input 1, H1-HC	Input 2, H2-HC			
OFF	OFF	OFF	Safely disabled, “Safe Torque Off”	Hbb (flashes)
ON	OFF	ON	Safely disabled, “Safe Torque Off”	HbbF (flashes)
OFF	ON	ON	Safely disabled, “Safe Torque Off”	HbbF (flashes)
ON	ON	ON	Baseblock, ready for operation	Normal display

Safe Disable Status Monitor

With the Safe Disable monitor output (terminals DM+ and DM-), the drive provides a safety status feedback signal. This signal should be read by the device that controls the Safe Disable inputs (PLC or a safety relay) in order to prohibit leaving the “Safe Torque Off” status in case the safety circuit malfunctions. Refer to the instruction manual of the safety device for details on this function.

Digital Operator Display

When both Safe Disable inputs are open, “Hbb” will flash in the digital operator display.

Should only one of the Safe Disable channels be on while the other is off, “HbbF” will flash in the display to indicate that there is a problem in the safety circuit or in the drive. This display should not appear under normal conditions if the Safe Disable circuit is utilized properly. *Refer to Alarm Codes, Causes, and Possible Solutions on page 319* to resolve possible errors.

上正科技有限公司
購買、維修 此手冊零組件
電話： 037-466333
Email: service@repairtw.com
Line id: @zzzz
www.repairtw.com

Appendix: E

Quick Reference Sheet

This section provides tables to keep record of the drive specification, motor specification and drive settings. Fill in the data after commissioning the application and have them ready when contacting Yaskawa for technical assistance.

E.1 DRIVE AND MOTOR SPECIFICATIONS 522
E.2 BASIC PARAMETER SETTINGS 523
E.3 USER SETTING TABLE 524

上正科技有限公司
購買、維修 此手冊零組件
電話： 037-466333
Email: service@repairtw.com
Line id: @zzzz
www.repairtw.com

E.1 Drive and Motor Specifications

◆ Drive Specifications

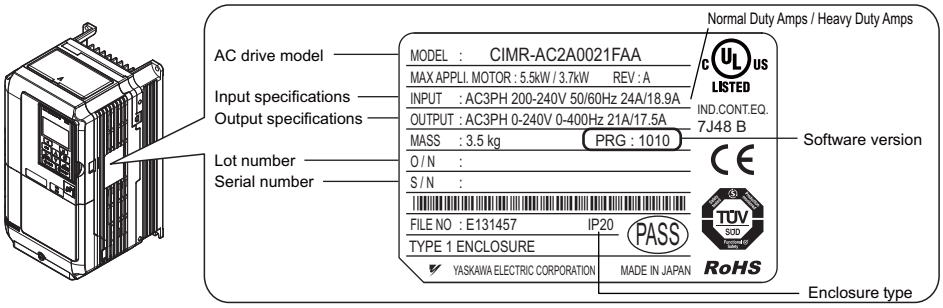

Items	Value
Model	CIMR-A
Serial Number	
Software Version (PRG)	
Options used (Option cards, braking transistor, etc.)	

◆ Motor Specifications

■ Induction Motor

上正科技有限公司
購買・維修 此手冊零組件
電話： 037-466333
Email: service@repairtw.com
Line id: @zzz
www.repairtw.com

Items	Value	Items	Value
Manufacturer		**Motor Rated Current**	A
Model		**Motor Base Frequency**	Hz
Motor Rated Power	kW	**Number of Motor Poles**	
Motor Rated Voltage	V	**Motor Rated Speed (T1-07)**	r/min

■ Permanent Magnet Motor

Items	Value	Items	Value
Manufacturer		**Induction Voltage Constant**	mVs/rad
Model		**Induction Voltage Constant**	mV/(r/min)
PM Motor Rated Power	kW	**PM Motor Rated Current**	A
PM Motor Rated Voltage	V	**PM Motor Base Frequency**	Hz
d-Axis Inductance	mH	**Number of PM Motor Poles**	
q-Axis Inductance	mH	**PM Motor Base Speed**	r/min

■ Motor Speed Encoder (if used)

Items	Value	Items	Value
Manufacturer		**Resolution**	
Interface			

E.2 Basic Parameter Settings

Use these tables to keep record of the most important parameters. Have these data available when contacting the technical support.

◆ Basic Setup

Item	Setting Value	Memo	Item	Setting Value	Memo
Control Mode	A1-02 =		Frequency Reference Source	b1-01 =	
Normal/Heavy Duty Selection	C6-01 =		Run Command Source	b1-02 =	

◆ V/f Pattern Setup

Item	Setting Value	Memo	Item	Setting Value	Memo
V/f Pattern Selection	E1-03 =		Middle Output Frequency	E1-07 =	
Max. Output Frequency	E1-04 =		Mid. Output Freq. Voltage	E1-08 =	
Maximum Voltage	E1-05 =		Min. Output Frequency	E1-09 =	
Base Frequency	E1-06 =		Min. Output Freq. Voltage	E1-10 =	

◆ Motor Setup

	Item	Setting Value	Memo	Item	Setting Value	Memo
Induction Motor	Motor Rated Current	E2-01 =		Number of Motor Poles	E2-04 =	
	Motor Rated Slip	E2-02 =		Line-to-Line Resistance	E2-05 =	
	Motor No-Load Current	E2-03 =		Motor Leakage Inductance	E2-06 =	
PM Motor	Motor Code Selection	E5-01 =		Motor d-Axis Inductance	E5-06 =	
	Motor Rated Power	E5-02 =		Motor q-Axis Inductance	E5-07 =	
	Motor Rated Current	E5-03 =		Induction Volt. Const.1	E5-09 =	
	Number of Motor Poles	E5-04 =		Encoder Z-pulse Offset	E5-11 =	
	Motor Stator Resistance	E5-05 =		Induction Volt. Const. 2	E5-24 =	

上正科技有限公司
購買、維修 此手冊零組件
電話： 037-466333
Email: service@repairtw.com
Line id: @zzzz
www.repairtw.com

◆ Multi-Function Digital Inputs

Terminal	Input Used	Setting Value and Function Name	Memo	Terminal	Input Used	Setting Value and Function Name	Memo
S1		H1-01 =		S5		H1-05 =	
S2		H1-02 =		S6		H1-06 =	
S3		H1-03 =		S7		H1-07 =	
S4		H1-04 =		S8		H1-08 =	

◆ Pulse Train Input/Analog Inputs

Terminal	Input Used	Setting Value and Function Name	Memo
RP		H6-01 =	
A1		H3-02 =	
A2		H3-10 =	
A3		H3-06 =	

◆ Multi-Function Digital Outputs

Terminal	Output Used	Setting Value and Function Name	Memo
M1-M2		H2-01 =	
M3-M4		H2-02 =	
M5-M6		H2-03 =	

◆ Monitor Outputs

Terminal	Output Used	Setting Value and Function Name	Memo
FM		H4-01 =	
AM		H4-04 =	
MP		H6-06 =	

E.3 User Setting Table

Use the Verify Menu to see which parameters have been changed from their original default settings.

- The diamond below the parameter number indicates that the parameter setting can be changed during run.
- Parameter names in boldface type are included in the Setup Group of parameters.

No.	Name	User Setting
A1-00◆	Language Selection	
A1-01◆	Access Level Selection	
A1-02	**Control Method Selection**	
A1-03	Initialize Parameters	
A1-04	Password	
A1-05	Password Setting	
A1-06	Application Preset	
A1-07	DriveWorksEZ Function Selection	
A2-01 to A2-32	User Parameters 1 to 32	
A2-33	User Parameter Automatic Selection	
b1-01	**Frequency Reference Selection 1**	
b1-02	**Run Command Selection 1**	
b1-03	**Stopping Method Selection**	
b1-04	Reverse Operation Selection	
b1-05	Action Selection below Minimum Output Frequency	
b1-06	Digital Input Reading	
b1-07	LOCAL/REMOTE Run Selection	
b1-08	Run Command Selection while in Programming Mode	
b1-14	Phase Order Selection	
b1-15	Frequency Reference Selection 2	
b1-16	Run Command Selection 2	
b1-17	Run Command at Power Up	
b2-01	DC Injection Braking Start Frequency	
b2-02	DC Injection Braking Current	
b2-03	DC Injection Braking Time at Start	
b2-04	DC Injection Braking Time at Stop	
b2-08	Magnetic Flux Compensation Value	
b2-12	Short Circuit Brake Time at Start	
b2-13	Short Circuit Brake Time at Stop	
b2-18	Short Circuit Braking Current	
b3-01	Speed Search Selection at Start	
b3-02	Speed Search Deactivation Current	
b3-03	Speed Search Deceleration Time	
b3-04	V/f Gain during Speed Search	
b3-05	Speed Search Delay Time	
b3-06	Output Current 1 during Speed Search	
b3-10	Speed Search Detection Compensation Gain	
b3-14	Bi-Directional Speed Search Selection	
b3-17	Speed Search Restart Current Level	
b3-18	Speed Search Restart Detection Time	
b3-19	Number of Speed Search Restarts	
b3-24	Speed Search Method Selection	
b3-25	Speed Search Wait Time	
b4-01	Timer Function On-Delay Time	
b4-02	Timer Function Off-Delay Time	
b5-01	PID Function Setting	
b5-02◆	Proportional Gain Setting (P)	
b5-03◆	Integral Time Setting (I)	
b5-04◆	Integral Limit Setting	
b5-05◆	Derivative Time (D)	
b5-06◆	PID Output Limit	
b5-07◆	PID Offset Adjustment	
b5-08◆	PID Primary Delay Time Constant	
b5-09	PID Output Level Selection	
b5-10	PID Output Gain Setting	

No.	Name	User Setting
b5-11	PID Output Reverse Selection	
b5-12	PID Feedback Loss Detection Selection	
b5-13	PID Feedback Loss Detection Level	
b5-14	PID Feedback Loss Detection Time	
b5-15	PID Sleep Function Start Level	
b5-16	PID Sleep Delay Time	
b5-17	PID Accel/Decel Time	
b5-18	PID Setpoint Selection	
b5-19	PID Setpoint Value	
b5-20	PID Setpoint Scaling	
b5-34◆	PID Output Lower Limit	
b5-35◆	PID Input Limit	
b5-36	PID Feedback High Detection Level	
b5-37	PID Feedback High Detection Time	
b5-38	PID Setpoint User Display	
b5-39	PID Setpoint Display Digits	
b5-40	Frequency Reference Monitor Content during PID	
b6-01	Dwell Reference at Start	
b6-02	Dwell Time at Start	
b6-03	Dwell Reference at Stop	
b6-04	Dwell Time at Stop	
b7-01◆	Droop Control Gain	
b7-02◆	Droop Control Delay Time	
b8-01	Energy Saving Control Selection	
b8-02◆	Energy Saving Gain	
b8-03◆	Energy Saving Control Filter Time Constant	
b8-04	Energy Saving Coefficient Value	
b8-05	Power Detection Filter Time	
b8-06	Search Operation Voltage Limit	
b9-01	Zero Servo Gain	
b9-02	Zero Servo Completion Width	
C1-01◆	**Acceleration Time 1**	
C1-02◆	**Deceleration Time 1**	
C1-03◆	Acceleration Time 2	
C1-04◆	Deceleration Time 2	
C1-05◆	Acceleration Time 3 (Motor 2 Accel Time 1)	
C1-06◆	Deceleration Time 3 (Motor 2 Decel Time 1)	
C1-07◆	Acceleration Time 4 (Motor 2 Accel Time 2)	
C1-08◆	Deceleration Time 4 (Motor 2 Decel Time 2)	
C1-09	Fast-Stop Time	
C1-10	Accel/Decel Time Setting Units	
C1-11	Accel/Decel Time Switching Frequency	
C2-01	S-Curve Characteristic at Accel Start	
C2-02	S-Curve Characteristic at Accel End	
C2-03	S-Curve Characteristic at Decel Start	
C2-04	S-Curve Characteristic at Decel End	
C3-01◆	Slip Compensation Gain	
C3-02◆	Slip Compensation Primary Delay Time	
C3-03	Slip Compensation Limit	
C3-04	Slip Compensation Selection during Regeneration	
C3-05	Output Voltage Limit Operation Selection	
C3-21◆	Motor 2 Slip Compensation Gain	
C3-22◆	Motor 2 Slip Compensation Primary Delay Time	
C3-23	Motor 2 Slip Compensation Limit	
C3-24	Motor 2 Slip Compensation Selection during Regeneration	
C4-01◆	Torque Compensation Gain	

上正科技有限公司
購買、維修 此手冊更新
電話： 037-402533
Email: service@repairtw.com
Line id: @zzzz
www.repairtw.com

No.	Name	User Setting
C4-02◆	Torque Compensation Primary Delay Time	
C4-03	Torque Compensation at Forward Start	
C4-04	Torque Compensation at Reverse Start	
C4-05	Torque Compensation Time Constant	
C4-06	Torque Compensation Primary Delay Time 2	
C4-07◆	Motor 2 Torque Compensation Gain	
C5-01◆	ASR Proportional Gain 1	
C5-02◆	ASR Integral Time 1	
C5-03◆	ASR Proportional Gain 2	
C5-04◆	ASR Integral Time 2	
C5-05	ASR Limit	
C5-06	ASR Primary Delay Time Constant	
C5-07	ASR Gain Switching Frequency	
C5-08	ASR Integral Limit	
C5-12	Integral Operation during Accel/Decel	
C5-17	Motor Inertia	
C5-18	Load Inertia Ratio	
C5-21◆	Motor 2 ASR Proportional Gain 1	
C5-22◆	Motor 2 ASR Integral Time 1	
C5-23◆	Motor 2 ASR Proportional Gain 2	
C5-24◆	Motor 2 ASR Integral Time 2	
C5-25	Motor 2 ASR Limit	
C5-26	Motor 2 ASR Primary Delay Time Constant	
C5-27	Motor 2 ASR Gain Switching Frequency	
C5-28	Motor 2 ASR Integral Limit	
C5-32	Integral Operation during Accel/Decel for Motor 2	
C5-37	Motor 2 Inertia	
C5-38	Motor 2 Load Inertia Ratio	
C6-01	**Drive Duty Selection**	
C6-02	**Carrier Frequency Selection**	
C6-03	Carrier Frequency Upper Limit	
C6-04	Carrier Frequency Lower Limit	
C6-05	Carrier Frequency Proportional Gain	
C6-09	Carrier Frequency during Rotational Auto-Tuning	
d1-01◆	**Frequency Reference 1**	
d1-02◆	**Frequency Reference 2**	
d1-03◆	**Frequency Reference 3**	
d1-04◆	**Frequency Reference 4**	
d1-05◆	Frequency Reference 5	
d1-06 ◆	Frequency Reference 6	
d1-07◆	Frequency Reference 7	
d1-08◆	Frequency Reference 8	
d1-09 ◆	Frequency Reference 9	
d1-10◆	Frequency Reference 10	
d1-11◆	Frequency Reference 11	
d1-12◆	Frequency Reference 12	
d1-13◆	Frequency Reference 13	
d1-14◆	Frequency Reference 14	
d1-15◆	Frequency Reference 15	
d1-16◆	Frequency Reference 16	
d1-17◆	**Jog Frequency Reference**	
d2-01	Frequency Reference Upper Limit	
d2-02	Frequency Reference Lower Limit	
d2-03	Master Speed Reference Lower Limit	
d3-01	Jump Frequency 1	
d3-02	Jump Frequency 2	
d3-03	Jump Frequency 3	
d3-04	Jump Frequency Width	
d4-01	Frequency Reference Hold Function Selection	
d4-03◆	Frequency Reference Bias Step (Up/Down 2)	
d4-04◆	Frequency Reference Bias Accel/Decel (Up/Down 2)	
d4-05◆	Frequency Reference Bias Operation Mode Selection (Up/Down 2)	
d4-06	Frequency Reference Bias (Up/Down 2)	
d4-07◆	Analog Frequency Reference Fluctuation Limit (Up/Down 2)	

No.	Name	User Setting
d4-08◆	Frequency Reference Bias Upper Limit (Up/Down 2)	
d4-09◆	Frequency Reference Bias Lower Limit (Up/Down 2)	
d4-10	Up/Down Frequency Reference Limit Selection	
d4-11	Bi-directional Output Selection	
d4-12	Stop Position Gain	
d5-01	Torque Control Selection	
d5-02	Torque Reference Delay Time	
d5-03	Speed Limit Selection	
d5-04	Speed Limit	
d5-05	Speed Limit Bias	
d5-06	Speed/Torque Control Switchover Time	
d5-08	Unidirectional Speed Limit Bias	
d6-01	Field Weakening Level	
d6-02	Field Weakening Frequency Limit	
d6-03	Field Forcing Selection	
d6-06	Field Forcing Limit	
d7-01◆	Offset Frequency 1	
d7-02◆	Offset Frequency 2	
d7-03◆	Offset Frequency 3	
E1-01	**Input Voltage Setting**	
E1-03	V/f Pattern Selection	
E1-04	**Maximum Output Frequency**	
E1-05	**Maximum Voltage**	
E1-06	**Base Frequency**	
E1-07	Middle Output Frequency	
E1-08	Middle Output Frequency Voltage	
E1-09	**Minimum Output Frequency**	
E1-10	Minimum Output Frequency Voltage	
E1-11	Middle Output Frequency 2	
E1-12	Middle Output Frequency Voltage 2	
E1-13	**Base Voltage**	
E2-01	**Motor Rated Current**	
E2-02	Motor Rated Slip	
E2-03	Motor No-Load Current	
E2-04	Number of Motor Poles	
E2-05	Motor Line-to-Line Resistance	
E2-06	Motor Leakage Inductance	
E2-07	Motor Iron-Core Saturation Coefficient 1	
E2-08	Motor Iron-Core Saturation Coefficient 2	
E2-09	Motor Mechanical Loss	
E2-10	Motor Iron Loss for Torque Compensation	
E2-11	**Motor Rated Power**	
E3-01	Motor 2 Control Mode Selection	
E3-04	Motor 2 Maximum Output Frequency	
E3-05	Motor 2 Maximum Voltage	
E3-06	Motor 2 Base Frequency	
E3-07	Motor 2 Mid Output Frequency	
E3-08	Motor 2 Mid Output Frequency Voltage	
E3-09	Motor 2 Minimum Output Frequency	
E3-10	Motor 2 Minimum Output Frequency Voltage	
E3-11	Motor 2 Mid Output Frequency 2	
E3-12	Motor 2 Mid Output Frequency Voltage 2	
E3-13	**Motor 2 Base Voltage**	
E4-01	Motor 2 Rated Current	
E4-02	Motor 2 Rated Slip	
E4-03	Motor 2 Rated No-Load Current	
E4-04	Motor 2 Motor Poles	
E4-05	Motor 2 Line-to-Line Resistance	
E4-06	Motor 2 Leakage Inductance	
E4-07	Motor 2 Motor Iron-Core Saturation Coefficient 1	
E4-08	Motor 2 Motor Iron-Core Saturation Coefficient 2	
E4-09	Motor 2 Mechanical Loss	
E4-10	Motor 2 Iron Loss	
E4-11	Motor 2 Rated Power	
E5-01	Motor Code Selection	

上正科技有限公司
購買、維修 此手冊零組件
電話： 037-466333
Email: service@repairtw.com
Line Id: @zzzz
www.repairtw.com

No.	Name	User Setting
E5-02	Motor Rated Power	
E5-03	Motor Rated Current	
E5-04	Number of Motor Poles	
E5-05	Motor Stator Resistance	
E5-06	Motor d-Axis Inductance	
E5-07	Motor q-Axis Inductance	
E5-09	Motor Induction Voltage Constant 1	
E5-11	Encoder Z-pulse Offset	
E5-24	Motor Induction Voltage Constant 2	
F1-01	PG 1 Pulses Per Revolution	
F1-02	Operation Selection at PG Open Circuit (PGo)	
F1-03	Operation Selection at Overspeed (oS)	
F1-04	Operation Selection at Deviation	
F1-05	PG 1 Rotation Selection	
F1-06	PG 1 Division Rate for PG Pulse Monitor	
F1-08	Overspeed Detection Level	
F1-09	Overspeed Detection Delay Time	
F1-10	Excessive Speed Deviation Detection Level	
F1-11	Excessive Speed Deviation Detection Delay Time	
F1-12	PG 1 Gear Teeth 1	
F1-13	PG 1 Gear Teeth 2	
F1-14	PG Open-Circuit Detection Time	
F1-18	dv3 Detection Selection	
F1-19	dv4 Detection Selection	
F1-20	PG Option Card Disconnect Detection 1	
F1-21	PG 1 Signal Selection	
F1-30	PG Option Card Port for Motor 2 Selection	
F1-31	PG 2 Pulses Per Revolution	
F1-32	PG 2 Rotation Selection	
F1-33	PG 2 Gear Teeth 1	
F1-34	PG 2 Gear Teeth 2	
F1-35	PG 2 Division Rate for PG Pulse Monitor	
F1-36	PG Option Card Disconnect Detection 2	
F1-37	PG2 Signal Selection	
F2-01	Analog Input Option Card Operation Selection	
F2-02◆	Analog Input Option Card Gain	
F2-03◆	Analog Input Option Card Bias	
F3-01	Digital Input Option Card Input Selection	
F3-03	Digital Input Option DI-A3 Data Length Selection	
F4-01	Terminal V1 Monitor Selection	
F4-02◆	Terminal V1 Monitor Gain	
F4-03	Terminal V2 Monitor Selection	
F4-04◆	Terminal V2 Monitor Gain	
F4-05◆	Terminal V1 Monitor Bias	
F4-06◆	Terminal V2 Monitor Bias	
F4-07	Terminal V1 Signal Level	
F4-08	Terminal V2 Signal Level	
F5-01	Terminal P1-PC Output Selection	
F5-02	Terminal P2-PC Output Selection	
F5-03	Terminal P3-PC Output Selection	
F5-04	Terminal P4-PC Output Selection	
F5-05	Terminal P5-PC Output Selection	
F5-06	Terminal P6-PC Output Selection	
F5-07	Terminal M1-M2 Output Selection	
F5-08	Terminal M3-M4 Output Selection	
F5-09	DO-A3 Output Mode Selection	
F6-01	Communications Error Operation Selection	
F6-02	External Fault from Comm. Option Detection Selection	
F6-03	External Fault from Comm. Option Operation Selection	
F6-04	bUS Error Detection Time	
F6-06	Torque Reference/Torque Limit Selection from Comm. Option	
F6-07	Multi-Step Speed Enable/Disable Selection when NetRef/ComRef is Selected	
F6-08	Reset Communication Parameters	
F6-10	CC-Link Node Address	

No.	Name	User Setting
F6-11	CC-Link Communications Speed	
F6-14	CC-Link bUS Error Auto Reset	
F6-20	MECHATROLINK Station Address	
F6-21	MECHATROLINK Frame Size	
F6-22	MECHATROLINK Link Speed	
F6-23	MECHATROLINK Monitor Selection (E)	
F6-24	MECHATROLINK Monitor Selection (F)	
F6-25	Operation Selection at Watchdog Timer Error (E5)	
F6-26	MECHATROLINK bUS Errors Detected	
F6-30	PROFIBUS-DP Node Address	
F6-31	PROFIBUS-DP Clear Mode Selection	
F6-32	PROFIBUS-DP Data Format Selection	
F6-35	CANopen Node ID Selection	
F6-36	CANopen Communication Speed	
F6-50	DeviceNet MAC Address	
F6-51	DeviceNet Communication Speed	
F6-52	DeviceNet PCA Setting	
F6-53	DeviceNet PPA Setting	
F6-54	DeviceNet Idle Mode Fault Detection	
F6-55	DeviceNet Baud Rate Monitor	
F6-56	DeviceNet Speed Scaling	
F6-57	DeviceNet Current Scaling	
F6-58	DeviceNet Torque Scaling	
F6-59	DeviceNet Power Scaling	
F6-60	DeviceNet Voltage Scaling	
F6-61	DeviceNet Time Scaling	
F6-62	DeviceNet Heartbeat Interval	
F6-63	DeviceNet Network MAC ID	
H1-01	Multi-Function Digital Input Terminal S1 Function Selection	
H1-02	Multi-Function Digital Input Terminal S2 Function Selection	
H1-03	Multi-Function Digital Input Terminal S3 Function Selection	
H1-04	Multi-Function Digital Input Terminal S4 Function Selection	
H1-05	Multi-Function Digital Input Terminal S5 Function Selection	
H1-06	Multi-Function Digital Input Terminal S6 Function Selection	
H1-07	Multi-Function Digital Input Terminal S7 Function Selection	
H1-08	Multi-Function Digital Input Terminal S8 Function Selection	
H2-01	Terminal M1-M2 Function Selection (relay)	
H2-02	Terminal M3-M4 Function Selection	
H2-03	Terminal M5-M6 Function Selection	
H2-06	Watt Hour Output Unit Selection	
H3-01	Terminal A1 Signal Level Selection	
H3-02	Terminal A1 Function Selection	
H3-03◆	Terminal A1 Gain Setting	
H3-04◆	Terminal A1 Bias Setting	
H3-05	Terminal A3 Signal Level Selection	
H3-06	Terminal A3 Function Selection	
H3-07◆	Terminal A3 Gain Setting	
H3-08◆	Terminal A3 Bias Setting	
H3-09	Terminal A2 Signal Level Selection	
H3-10	Terminal A2 Function Selection	
H3-11◆	Terminal A2 Gain Setting	
H3-12◆	Terminal A2 Bias Setting	
H3-13	Analog Input Filter Time Constant	
H3-14	Analog Input Terminal Enable Selection	
H4-01	Multi-Function Analog Output Terminal FM Monitor Selection	
H4-02◆	**Multi-Function Analog Output Terminal FM Gain**	
H4-03◆	Multi-Function Analog Output Terminal FM Bias	
H4-04	Multi-Function Analog Output Terminal AM Monitor Selection	

上正科技有限公司
購買、維修 此手冊零件
電話： 037-466333
Email: service@repairtw.com
Line id: @zzzz
www.repairtw.com

No.	Name	User Setting
H4-05◆	Multi-Function Analog Output Terminal AM Gain	
H4-06◆	Multi-Function Analog Output Terminal AM Bias	
H4-07	Multi-Function Analog Output Terminal FM Signal Level Selection	
H4-08	Multi-Function Analog Output Terminal AM Signal Level Selection	
H5-01	Drive Node Address	
H5-02	Communication Speed Selection	
H5-03	Communication Parity Selection	
H5-04	Stopping Method After Communication Error (CE)	
H5-05	Communication Fault Detection Selection	
H5-06	Drive Transmit Wait Time	
H5-07	RTS Control Selection	
H5-09	CE Detection Time	
H5-10	Unit Selection for MEMOBUS/Modbus Register 0025H	
H5-11	Communications ENTER Function Selection	
H5-12	Run Command Method Selection	
H6-01	Pulse Train Input Terminal RP Function Selection	
H6-02◆	Pulse Train Input Scaling	
H6-03◆	Pulse Train Input Gain	
H6-04◆	Pulse Train Input Bias	
H6-05◆	Pulse Train Input Filter Time	
H6-06◆	Pulse Train Monitor Selection	
H6-07◆	Pulse Train Monitor Scaling	
H6-08	Pulse Train Input Minimum Frequency	
L1-01	Motor Overload Protection Selection	
L1-02	Motor Overload Protection Time	
L1-03	Motor Overheat Alarm Operation Selection (PTC input)	
L1-04	Motor Overheat Fault Operation Selection (PTC input)	
L1-05	Motor Temperature Input Filter Time (PTC input)	
L1-13	Continuous Electrothermal Operation Selection	
L2-01	Momentary Power Loss Operation Selection	
L2-02	Momentary Power Loss Ride-Thru Time	
L2-03	Momentary Power Loss Minimum Baseblock Time	
L2-04	Momentary Power Loss Voltage Recovery Ramp Time	
L2-05	Undervoltage Detection Level (Uv1)	
L2-06	KEB Deceleration Time	
L2-07	KEB Acceleration Time	
L2-08	Frequency Gain at KEB Start	
L2-10	KEB Detection Time (Minimum KEB Time)	
L2-11	DC Bus Voltage Setpoint during KEB	
L2-29	KEB Method Selection	
L3-01	Stall Prevention Selection during Acceleration	
L3-02	Stall Prevention Level during Acceleration	
L3-03	Stall Prevention Limit during Acceleration	
L3-04	**Stall Prevention Selection during Deceleration**	
L3-05	Stall Prevention Selection during Run	
L3-06	Stall Prevention Level during Run	
L3-11	Overvoltage Suppression Function Selection	
L3-17	Target DC Bus Voltage for Overvoltage Suppression and Stall Prevention	
L3-20	DC Bus Voltage Adjustment Gain	
L3-21	Accel/Decel Rate Calculation Gain	
L3-22	Deceleration Time at Stall Prevention during Acceleration	
L3-23	Automatic Reduction Selection for Stall Prevention during Run	
L3-24	Motor Acceleration Time for Inertia Calculations	
L3-25	Load Inertia Ratio	
L3-26	Additional DC Bus Capacitors	
L3-27	Stall Prevention Detection Time	
L4-01	Speed Agreement Detection Level	
L4-02	Speed Agreement Detection Width	
L4-03	Speed Agreement Detection Level (+/-)	
L4-04	Speed Agreement Detection Width (+/-)	
L4-05	Frequency Reference Loss Detection Selection	
L4-06	Frequency Reference at Reference Loss	

No.	Name	User Setting
L4-07	Speed Agreement Detection Selection	
L5-01	Number of Auto Restart Attempts	
L5-02	Auto Restart Fault Output Operation Selection	
L5-04	Fault Reset Interval Time	
L5-05	Fault Reset Operation Selection	
L6-01	Torque Detection Selection 1	
L6-02	Torque Detection Level 1	
L6-03	Torque Detection Time 1	
L6-04	Torque Detection Selection 2	
L6-05	Torque Detection Level 2	
L6-06	Torque Detection Time 2	
L6-08	Mechanical Weakening Detection Operation	
L6-09	Mechanical Weakening Detection Speed Level	
L6-10	Mechanical Weakening Detection Time	
L6-11	Mechanical Weakening Detection Start Time	
L7-01	Forward Torque Limit	
L7-02	Reverse Torque Limit	
L7-03	Forward Regenerative Torque Limit	
L7-04	Reverse Regenerative Torque Limit	
L7-06	Torque Limit Integral Time Constant	
L7-07	Torque Limit Control Method Selection during Accel/Decel	
L8-01	Internal Dynamic Braking Resistor Protection Selection (ERF type)	
L8-02	Overheat Alarm Level	
L8-03	Overheat Pre-Alarm Operation Selection	
L8-05	Input Phase Loss Protection Selection	
L8-07	Output Phase Loss Protection	
L8-09	Output Ground Fault Detection Selection	
L8-10	Heatsink Cooling Fan Operation Selection	
L8-11	Heatsink Cooling Fan Off Delay Time	
L8-12	Ambient Temperature Setting	
L8-15	oL2 Characteristics Selection at Low Speeds	
L8-18	Software Current Limit Selection	
L8-19	Frequency Reduction Rate during Overheat Pre-Alarm	
L8-27	Overcurrent Detection Gain	
L8-29	Current Unbalance Detection (LF2)	
L8-35	Installation Method Selection	
L8-38	Carrier Frequency Reduction Selection	
L8-40	Carrier Frequency Reduction Off-Delay Time	
L8-41	High Current Alarm Selection	
L8-55	Internal Braking Transistor Protection	
n1-01	Hunting Prevention Selection	
n1-02	Hunting Prevention Gain Setting	
n1-03	Hunting Prevention Time Constant	
n1-05	Hunting Prevention Gain while in Reverse	
n2-01	Speed Feedback Detection Control (AFR) Gain	
n2-02	Speed Feedback Detection Control (AFR) Time Constant 1	
n2-03	Speed Feedback Detection Control (AFR) Time Constant 2	
n3-01	High Slip Braking Deceleration Frequency Width	
n3-02	High Slip Braking Current Limit	
n3-03	High Slip Braking Dwell Time at Stop	
n3-04	High Slip Braking Overload Time	
n3-13	Overexcitation Deceleration Gain	
n3-14	High Frequency Injection during Overexcitation Deceleration	
n3-21	High Slip Suppression Current Level	
n3-23	Overexcitation Operation Selection	
n5-01	Feed Forward Control Selection	
n5-02	Motor Acceleration Time	
n5-03	Feed Forward Control Gain	
n6-01	Online Tuning Selection	
n6-05	Online Tuning Gain	
n8-01	Initial Rotor Position Estimation Current	
n8-02	Pole Attraction Current	
n8-35	Initial Rotor Position Detection Selection	

上正科技有限公司
購買、維修 此手冊零組件
電話： 037-466533
Email: service@repairtw.com
Line id: @zzzz
www.repairtw.com

No.	Name	User Setting
n8-45	Speed Feedback Detection Control Gain	
n8-47	Pull-In Current Compensation Time Constant	
n8-48	Pull-In Current	
n8-49	d-Axis Current for High Efficiency Control	
n8-51	Acceleration/Deceleration Pull-In Current	
n8-54	Voltage Error Compensation Time Constant	
n8-55	Load Inertia	
n8-57	High Frequency Injection	
n8-62	Output Voltage Limit	
n8-65	Speed Feedback Detection Control Gain during ov Suppression	
o1-01◆	Drive Mode Unit Monitor Selection	
o1-02◆	User Monitor Selection After Power Up	
o1-03	Digital Operator Display Selection	
o1-04	V/f Pattern Display Unit	
o1-10	User-Set Display Units Maximum Value	
o1-11	User-Set Display Units Decimal Display	
o2-01	LO/RE Key Function Selection	
o2-02	STOP Key Function Selection	
o2-03	User Parameter Default Value	
o2-04	Drive Model Selection	
o2-05	Frequency Reference Setting Method Selection	
o2-06	Operation Selection when Digital Operator is Disconnected	
o2-07	Motor Direction at Power Up when Using Operator	
o3-01	Copy Function Selection	
o3-02	Copy Allowed Selection	
o4-01	Cumulative Operation Time Setting	
o4-02	Cumulative Operation Time Selection	
o4-03	Cooling Fan Maintenance Operation Time Setting	
o4-05	Capacitor Maintenance Setting	
o4-07	DC Bus Pre-charge Relay Maintenance Setting	
o4-09	IGBT Maintenance Setting	
o4-11	U2, U3 Initialize Selection	
o4-12	kWh Monitor Initialization	
o4-13	Number of Run Commands Counter Initialization	
q1-01 to q6-07	DriveWorksEZ Parameters	
r1-01 to r1-40	DWEZ Connection Parameter 1 to 20 (upper/lower)	
T1-00	Motor 1/Motor 2 Selection	
T1-01	Auto-Tuning Mode Selection	
T1-02	Motor Rated Power	
T1-03	Motor Rated Voltage	
T1-04	Motor Rated Current	
T1-05	Motor Base Frequency	
T1-06	Number of Motor Poles	
T1-07	Motor Base Speed	
T1-08	PG Number of Pulses Per Revolution	
T1-09	Motor No-Load Current (Stationary Auto-Tuning)	
T1-10	Motor Rated Slip (Stationary Auto-Tuning)	
T1-11	Motor Iron Loss	
T2-01	PM Motor Auto-Tuning Mode Selection	
T2-02	PM Motor Code Selection	
T2-03	PM Motor Type	
T2-04	PM Motor Rated Power	
T2-05	PM Motor Rated Voltage	
T2-06	PM Motor Rated Current	
T2-07	PM Motor Base Frequency	
T2-08	Number of PM Motor Poles	
T2-09	PM Motor Base Speed	
T2-10	PM Motor Stator Resistance	
T2-11	PM Motor d-Axis Inductance	
T2-12	PM Motor q-Axis Inductance	
T2-13	Induced Voltage Constant Unit Selection	
T2-14	PM Motor Induced Voltage Constant	

No.	Name	User Setting
T2-15	Pull-In Current Level for PM Motor Tuning	
T2-16	PG Number of Pulses Per Revolution for PM Motor Tuning	
T2-17	Encoder Z-Pulse Offset	
T3-01	Test Signal Frequency	
T3-02	Test Signal Amplitude	
T3-03	Motor Inertia	
T3-04	System Response Frequency	

上正科技有限公司
購買、維修 此手冊零組件
電話： 037-466333
Email: service@repairtw.com
Line id: @zzzz
www.repairtw.com

Index

Symbols

-. 65
+1 65
+2 65
+3 65
+V 72

Numerics

1800 r/min Type Yaskawa SMRA Series SPM Motor Settings 463
24 V Power Supply 375
2-Wire Initialization 131
3-Wire Initialization 131
3-Wire Sequence 215
3-Wire Sequence Wiring Diagram 215
5th Most Recent Fault 450

A

A/D Conversion Error 301, 306
A1 72
A1000 Models 27
A1-02 (Motor 1 Control Mode) Dependent Parameters 454
A2 72
A2 Signal Selection 76
A3 72
A3 Analog/PTC Input Selection 76
AC 72, 73
AC Reactor 375
Accel/Decel Rate Calculation Gain 261
Accel/Decel Time 299, 391
Accel/Decel Time Setting Units 167
Accel/Decel Time Switching Frequency 166
Acceleration Error 304, 329
Acceleration Time 165
Acceleration Time Pull-In Current 442
Acceleration/Deceleration Pull-In Current 282
Access Level Selection 124, 130
Action Selection below Minimum Output Frequency 140
Additional DC Bus Capacitors 262
Adjusted Slip Calculation Error 328
Adjusting the ASR Parameters 172
AEr 319
AFR 276
AFR Gain 296
AFR Time Constant 1 296
AFR Time Constant 2 296
AI-A3 375
AI-A3 Settings 209
Alarm 304
ALARM (ALM) LED Displays 89
Alarm Outputs for Maintenance Monitors 349
Alarm Register 007FH Contents 501
Alarms and Errors 300
Allowable Frequency Fluctuation 389, 390
Allowable Voltage Fluctuation 389, 390
ALM LED Light 87
Altitude 40
AM 73
AM/FM Signal Selection 76
Ambient Temperature 40
Ambient Temperature and Installation Method Derating 396
Ambient Temperature Setting 271, 395, 438
Analog Filter Time Constant 299
Analog Frequency Reference Fluctuation Limit 186
Analog Frequency Reference Sample/Hold 220
Analog Input Card Settings 209
Analog Input Filter Time Constant 236
Analog Input Option Card Bias 209
Analog Input Option Card Gain 209
Analog Input Option Card Operation Selection 209
Analog Input Terminal Enable Selection 237
Analog Inputs / Pulse Train Input 72
Analog Monitor Card Settings 210
AO-A3 375
AO-A3 Settings 210
Application Notes 19
Application Presets 103
Application Selection 103
Applications with Specialized Motors 22
ASR 171
ASR Gain Auto-Tuning 110
ASR Gain Switching Frequency 175
ASR Integral Limit 175
ASR Integral Time 173
ASR Limit 174
ASR Primary Delay Time Constant 174
ASR Proportional Gain 173
ASR Response Frequency 120
Attachment for External Heatsink 375, 385
Auto Restart Fault Output Operation Selection 264
Auto Restart Operation Selection 437
Automatic Reduction Selection for Stall Prevention during Run 259, 436
Automatic Speed Regulator 171
Auto-Tuning 109, 111, 114
Auto-Tuning Codes 328
Auto-Tuning Error Displays 304
Auto-Tuning Errors 304
Auto-Tuning Fault Codes 112
Auto-Tuning Fault Detection 328
Auto-Tuning Fault Solutions 328
Auto-Tuning for Induction Motors 109
Auto-Tuning for Permanent Magnet Motors 110
Auto-Tuning Input Data 109, 110, 111
Auto-Tuning Interruption and Fault Codes 112
Auto-Tuning Mode Selection 114, 444

B

B1 65
B2 65
Backing Up Parameter Values 124
Base Frequency 197, 314
Base Voltage 197
Baseblock 319
Baseblock Signal Input 303
Basic Auto-Tuning Preparations 111
Basic Start-up and Motor Tuning 98
bb 302, 319
Before Auto-Tuning the Drive 111
Bi-Directional Output Selection 187
Bi-Directional Speed Search Selection 150
boL 306, 319
Bottom Cover 32
Braking Options 379
Braking Resistor 375, 379
Braking Resistor Fault 316
Braking Resistor Overheat 316
Braking Resistor Overheat Protection 391

上正科技有限公司
購買、維修 此手冊零組件
電話：037-461333
Email: service@repairtw.com
Line id: @zzzz
www.repairtw.com

Braking Resistor Overload Protection 380
Braking Torque 391
Braking Transistor 391
Braking Transistor Overload Fault 306, 319
Braking Unit 375
Broadcast Messages 500
bUS 301, 302, 306, 319
Buzzing Sound from Motor at 2 kHz 341

C

Cable Length Between Drive and Motor 70
CALL 302, 319
Cannot Change Parameter Settings 336
Cannot Reset 302, 320
CANopen Parameters 211, 213
Capacitor Maintenance 450
Capacitor Maintenance Setting 288, 443
Capacitor Maintenance Time 322
Carrier Frequency 177, 389, 390
Carrier Frequency and Current Derating 179
Carrier Frequency Derating 394
Carrier Frequency during Rotational Auto-Tuning 179
Carrier Frequency Lower Limit 178
Carrier Frequency Proportional Gain 178
Carrier Frequency Reduction 439
Carrier Frequency Reduction Off-Delay Time 273
Carrier Frequency Reduction Selection 273
Carrier Frequency Selection 177, 296, 297
Carrier Frequency Setting Error 304, 327
Carrier Frequency Upper Limit 178
CC-Link Parameters 211, 213
CE 301, 302, 306, 320
CE Detection Time 483
CE Low Voltage Directive Compliance 510
CE mark 510
CF 301, 306
Changing Parameter Settings or Values 92
Circulation fan 33, 34
Closed Loop Vector control 28
Closed Loop Vector Control for PM Motors 28
Closed-Loop Crimp Terminal Size 515
Coast to stop 138
Coast to Stop with Timer 139
Command Messages from Master to Drive 486
Communication Error 332
Communication Fault Detection Selection 482
Communication Option Card 211
Communication Option Card Reference 451
Communication Option Station Number Setting Error (CC-Link, CANopen, MECHATROLINK-II) 319
Communication Parity Selection 482
Communication Speed Selection 482
Communications Enter Function Selection 483
Communications Error Operation Selection 211
Communications Timing 486
Comparing Parameter Settings 333
Complementary PG 375
Component Names 32
Compressor Application 105
Conducted Noise 383
Connected Machinery Vibrates When Motor Rotates 340
Connecting a DC Reactor 383
Connecting an AC Reactor 383
Connecting Braking Units in Parallel 381
Connecting Peripheral Devices 376
Connecting to a PC (USB) 81
Connection of a Motor PTC 247
Continuous Electrothermal Operation Selection 248
Control Board Connection Error 307
Control Circuit Error 306, 307
Control Circuit Fault 301
Control Circuit Input Terminals 72
Control Circuit Output Terminals 73
Control Circuit Terminal Arrangement 73
Control Circuit Terminal Block Functions 72
Control Circuit Wiring 72
Control Fault 301, 306
Control I/O Connections 77
Control Method Selection 130
Control Method Selection Error 326
Control Mode 130, 447
Control Mode Dependent Parameter Default Values 454
Control Mode Mismatch 332
Control Mode Selection 28
Control Modes and their Features 28
Control Monitors 453
Control Power Supply Undervoltage 302
Control Power Supply Voltage Fault 318
Conveyor Application 103
Cooling Fan 32, 33, 34
Cooling Fan Maintenance 450
Cooling Fan Maintenance Setting (Operation Time) 443
Cooling Fan Maintenance Time 321
Cooling Fan Operation Time 450
Cooling Fan Operation Time Setting 288
Cooling Fan Replacement 352
CoPy 332
Copy Allowed Selection 287
Copy Errors 304
Copy Function 125, 287
Copy Function Errors 300
Copy Function Selection 287
Copy Unit Error 332
CopyUnitManager 125
CPEr 332
CPF02 306
CPF03 307
CPF06 307
CPF07 307
CPF08 307
CPF11 to CPF14 306
CPF20 . . . . . 301, 307
CPF21 . . . . . 301, 307
CPF22 . . . . . 301, 307
CPF23 . . . . . 301, 307
CPF24 . . . . . 301, 307
CPF26 307
CPF34 307
CPyE 332
CRC-16 487
CRC-16 Checksum Calculation Example 488
CrST 302, 320
CSEr 332
Cumulative Operation Time 450
Cumulative Operation Time at 5th Most Recent Fault 450
Cumulative Operation Time at Most Recent Fault 450
Cumulative Operation Time at Previous Fault 449
Cumulative Operation Time Selection 288, 443
Cumulative Operation Time Setting 288, 443
Current Alarm 303, 321
Current Detection Error 304, 330
Current Detection Speed Search 146
Current Fault 449
Current Imbalance 301

上正科技有限公司
購買 維修 此手冊零組件
電話：037-486333
Email: service@repairtw.com
Line id: @zzzz
www.repairtw.com

Current Unbalance Detection (LF2) 272, 439
Cyclic Redundancy Check 487

D

D Control 152
d References 411
Daily Inspection 347
d-Axis ACR Output 452
d-Axis Current for High Efficiency Control 282
DC Bus Overvoltage 323
DC Bus Pre-Charge Relay Maintenance Setting 288
DC Bus Undervoltage 317
DC Bus Voltage 447
DC Bus Voltage Adjustment Gain 260
DC Bus Voltage at Previous Fault 449
DC Bus Voltage Setpoint during KEB 255
DC Injection Braking 339
DC Injection Braking at Stop 341
DC Injection Braking Current 145, 341
DC Injection Braking Input Timing Diagram 222
DC Injection Braking Start Frequency 144
DC Injection Braking Time at Start 145
DC Injection Braking Time at Stop 145
DC Injection Braking to Stop 139
DC Reactor 375
DC Reactors for EN 61000-3-2 Compliance 514
Deceleration Rate Calculation Gain 436
Deceleration Time 165
Deceleration Time at Stall Prevention during Acceleration 257, 436
Defaults by Drive Model Selection (o2-04) and ND/HD (C6-01) 457
Delay Timers 151
Derivative Time (D) 155
Desired DC Bus Voltage during KEB 435
dEv 301, 302, 308, 320
DeviceNet Parameters 211, 213
dFPS 332
DI-A3 375
DI-A3 Settings 209
Diagnosing and Resetting Faults 334
Digital Input Card Settings 209
Digital Input Option Card Input Selection 209
Digital Input Option DI-A3 Data Length Selection 210
Digital Input Reading 142
Digital Input Sink / Source / External Power Supply Selection 77
Digital Operator 32, 33, 34, 87
Digital Operator Dimensions 43
Digital Operator Display Selection 284, 442
Digital Operator Installation Methods and Required Tools 43
Digital Operator Keypad Functions 285
Digital Operator Menu and Screen Structure 90
Digital Operator Remote Installation 43
Digital Operator Remote Usage 42
Digital Output Card Settings 211
Digital Output Option Card Terminal Function Selection 211
Dimensions for IP00 Enclosure
  200 V Class 49
  400 V Class 49
Dimensions for IP20/NEMA Type 1 Enclosure
  200 V Class 47
  400 V Class 47
DIP Switch S1 . . . . . 35, 76
DIP Switch S1 Settings 79
DIP Switch S2 . . . . . 35, 76
DIP Switch S4 76
DIP Switch S4 Settings 79
DM- 73
DM+ 73
dnE 302, 320
DO-A3 375
DO-A3 Output Mode Selection 211
DO-A3 Settings 211
Drive Baseblock 302
Drive Capacity Setting Fault 325
Drive Capacity Signal Fault 301
Drive Cooling Fans 351
Drive Cover 32, 33
Drive Cover 1 34
Drive cover 2 34
Drive Derating Data 394
Drive Disabled 302, 320
Drive Does Not Allow Selection of Rotational Auto-Tuning 338
Drive Duty Mode Selection 177
Drive Mode 91, 92
Drive Mode Unit Monitor Selection 284, 442
Drive Model Mismatch 332
Drive Model Selection 286
Drive Models and Types 46
Drive Motor Overload Protection 516
Drive Operation Status at Previous Fault 449
Drive Overheat 303
Drive Overheat Warning 322
Drive Overload 302, 314
Drive Ready 82
Drive Replacement 369
Drive Short-Circuit Rating 516
Drive Slave Address 482
Drive Specifications 391
Drive Standard Connection Diagram 54
Drive Status 448
Drive Transmit Wait Time 483
Drive Unit Setting Error 304
Drive Unit Signal Fault 307
Drive Watt Loss Data 393
Drive/kVA Selection 443
DriveWizard Plus 125, 375
DriveWorksEZ 375
DriveWorksEZ Connection Parameters 289
DriveWorksEZ Custom Monitor 1 to 10 453
DriveWorksEZ Fault 308
DriveWorksEZ Function Selection 134
DriveWorksEZ Monitors 292
DriveWorksEZ Parameters 289
Droop Control 162
Droop Control Delay Time 162
Droop Control Gain 162
Droop Control Limit Selection 162
During Frequency Output Time Chart 232
During Run 2, Motor Switch Command Input 303
During Run Time Chart 225
dv1 308
dv2 308
dv3 308
dv3 Detection Selection 208
dv4 308
dv4 Detection Selection 208
dWAL 302, 308
Dwell Function 161, 299
Dwell Reference at Start 161
Dwell Reference at Stop 161
Dwell Time at Start 161

上正科技有限公司
購買、維修 此手冊零組件
電話：037-466338
Email: service@repairtw.com
Line id: @zzzz
www.repairtw.com

Dwell Time at Stop . . . 161
DWEZ Connection Parameters . . . 444
DWEZ Version Control Monitor 1 to 3 . . . 453
dWFL . . . 308
Dynamic Braking Resistor . . . 302
Dynamic Braking Transistor . . . 302, 316

E

E (G) . . . 72
E3-01 (Motor 2 Control Mode) Dependent Parameters . . . 455
EEPROM Memory Data Error . . . 307
EEPROM Write Error . . . 301, 309
EF . . . 303, 320
EF0 . . . 301, 309, 320
EF1 . . . 309, 320
EF1 to EF7 . . . 301, 303
EF2 . . . 309, 320
EF3 . . . 309, 320
EF4 . . . 309, 320
EF5 . . . 309, 320
EF6 . . . 309, 320
EF7 . . . 309, 321
EF8 . . . 309, 321
Electrical Installation . . . 51
EMC Filter and Drive Installation for CE Compliance . . . 512
EMC Filter Installation . . . 510
EMC Filters . . . 513
EMC Guidelines . . . 510
EMC Guidelines Compliance . . . 510
EN61800-3 C2 Filters . . . 513
Enclosure Types . . . 31
Encoder Z-Pulse Offset . . . 119, 205
End . . . 332
End1 . . . 304, 328
End2 . . . 304, 328
End3 . . . 304, 328
End4 . . . 328
End5 . . . 328
End6 . . . 328
End7 . . . 328
Energy Saving . . . 163
Energy Saving Coefficient Value . . . 163
Energy Saving Control Filter Time Constant . . . 163
Energy Saving Control Selection . . . 163
Energy Saving Gain . . . 163
Enter Command . . . 503
Enter command necessary . . . 484
Enter command not necessary . . . 484
Enter Command Settings when Upgrading the Drive . . . 503
Enter Command Types . . . 503
Enter Data from the Motor Nameplate . . . 113
Er-01 . . . 304, 329
Er-02 . . . 304, 329
Er-03 . . . 304, 329
Er-04 . . . 304, 329
Er-05 . . . 304, 329
Er-08 . . . 304, 329
Er-09 . . . 304, 329
Er-10 . . . 329
Er-11 . . . 304, 330
Er-12 . . . 304, 330
Er-13 . . . 330
Er-14 . . . 330
Er-15 . . . 330
Er-16 . . . 330
Er-17 . . . 330
Er-18 . . . 330
Er-19 . . . 330
Er-20 . . . 330
Er-21 . . . 331
Err . . . 301, 309
Error Reading Data . . . 333
Error Writing Data . . . 332
Errors and Displays When Using the Copy Function . . . 304
European Standards . . . 510
Excessive Motor Oscillation and Erratic Rotation . . . 339
Excessive PID Feedback . . . 301, 303, 309, 321
Excessive Speed Deviation (for Simple V/f with PG) . . . 301, 302
Excessive Speed Deviation Detection Delay Time . . . 207
Excessive Speed Deviation Detection Level . . . 207
Excessive V/f Setting . . . 304, 328
Exhaust Fan Application . . . 104
Exterior and Mounting Dimensions . . . 46
External 24 Vdc Power Supply . . . 77
External Digital Operator Connection Fault . . . 315
External Fault . . . 309, 320, 321
External Fault (input terminal S1 to S7) . . . 301, 303
External Fault from Comm. Option Detection Selection . . . 212
External Fault from Comm. Option Operation Selection . . . 212
External Interlock . . . 82

F

Fan Connector Cable (CN6) . . . 359
Fan Cover . . . 32, 352
Fan Guard . . . 33, 34, 360
Fan Relay Cable . . . 359
Fan Unit . . . 33, 34, 359
Fast Stop Sequence . . . 219
Fast Stop Time . . . 166
Fault Causes and Solutions . . . 306
Fault Detection . . . 306
Fault Displays . . . 301, 302, 306
Fault History . . . 291, 334, 450
Fault Relay . . . 73
Fault Reset Interval Time . . . 264, 437
Fault Reset Methods . . . 335
Fault Reset Operation Selection . . . 264, 437
Fault Restart . . . 263
Fault Trace . . . 291, 334, 449
Fault Trace / History Register Contents . . . 500
Fault Trace Example . . . 334
Faults . . . 300, 301
FbH . . . 301, 303, 309, 321
FbL . . . 301, 303, 310, 321
Feed Forward Control . . . 279
Feed Forward Control Diagram . . . 279
Feed Forward Control Gain . . . 280
Feed Forward Control Selection . . . 279
Ferrule Dimensions . . . 74
Ferrule Terminal Types and Sizes . . . 74
Ferrule-Type Wire Terminals . . . 74
Field Forcing . . . 192
Field Forcing Limit . . . 193
Field Forcing Selection . . . 192
Field Weakening . . . 192
Field Weakening Frequency Limit . . . 192
Field Weakening Level . . . 192
Fine-Tuning Advanced Open Loop Vector Control for PM Motors . . . 298
Fine-Tuning Closed Loop Vector Control . . . 297
Fine-Tuning Closed Loop Vector Control for PM Motors . . . 298
Fine-Tuning Open Loop Vector Control . . . 296
Fine-Tuning Open Loop Vector Control for PM Motors . . . 297
Fine-Tuning V/f Control and V/f Control with PG . . . 296

上正科技有限公司
購買 維修 此手冊零組件
電話 037-466939
Email: service@repairtw.com
Line id: @zzzz
www.repairtw.com

FJOG/RJOG Operation . . . 218
FM . . . 73
Formula to calculate the amount of voltage drop . . . 66
Forward Regenerative Torque Limit . . . 268, 438
Forward Torque Limit . . . 268, 438
Forward/Reverse Run Command Input Error . . . 320
Frequency Accuracy (Temperature Fluctuation) . . . 391
Frequency Control Range . . . 391
Frequency Detection 1 Time Chart . . . 227
Frequency Detection 2 Time Chart . . . 227
Frequency Detection 3 Example with a Positive L3-04 Value . . . 230
Frequency Detection 4 Example with Positive L3-04 Value . . . 230
Frequency Gain at KEB Start . . . 255
Frequency Reduction Rate during Overheat Pre-Alarm . . . 270, 439
Frequency Reference . . . 180, 447
Frequency Reference at Previous Fault . . . 449
Frequency Reference at Reference Loss . . . 263, 436
Frequency Reference Bias . . . 186
Frequency Reference Bias (Up/Down 2) . . . 452
Frequency Reference Bias Accel/Decel . . . 185
Frequency Reference Bias Lower Limit . . . 187
Frequency Reference Bias Operation Mode Selection . . . 186
Frequency Reference Bias Step . . . 185
Frequency Reference Bias Upper Limit . . . 187
Frequency Reference from MEMOBUS/Modbus Comm. . . . 451
Frequency Reference Hold . . . 183
Frequency Reference Hold Function Selection . . . 183
Frequency Reference Loss Detection Selection . . . 262, 436
Frequency Reference Lower Limit . . . 182
Frequency Reference Monitor Content During PID . . . 160
Frequency Reference Selection . . . 401
Frequency Reference Selection 1 . . . 136, 337
Frequency Reference Selection 2 . . . 143
Frequency Reference Setting / Decimal Display . . . 442
Frequency Reference Setting and User-Set Display . . . 442
Frequency Reference Setting Hierarchy . . . 180
Frequency Reference Setting Method Selection . . . 286, 443
Frequency Reference Source Selection . . . 451
Frequency Reference Upper Limit . . . 182
Frequency Setting Resolution . . . 391
Frequency Setting Signal . . . 391
Front Cover . . . 32, 33, 34
Front Cover Screw . . . 32, 33, 34
Function Code . . . 487
Function Key (F1, F2) . . . 87
Function Key 1 (F1) . . . 88
Function Key 2 (F2) . . . 88
Functions for Terminals S1 to S8 . . . 214
Fuse . . . 385

G

General Safety Information . . . 17
GF . . . 301, 310
Ground Fault . . . 301, 310
Ground Terminal . . . 35
Ground Wiring . . . 71

H

H1 . . . 72
H1 Multi-Function Digital Input Selections . . . 424
H1/H2 Sink/Source Selection . . . 76
H2 . . . 72
H3 Multi-Function Analog Input Settings . . . 431
Hbb . . . 303, 321
HbbF . . . 303, 321
HC . . . 72
HCA . . . 303, 321
HD . . . 177
HD and ND . . . 388
Heatsink . . . 32, 33, 34
Heatsink Cooling Fan Off-Delay Time . . . 271
Heatsink Cooling Fan Operation Delay Time . . . 438
Heatsink Cooling Fan Operation Selection . . . 271, 438
Heatsink Overheat . . . 302, 303, 313, 322
Heatsink Temperature . . . 450
Heavy Duty . . . 30, 177, 388
Heavy Duty Ratings . . . 388
High Current Alarm Selection . . . 273
High Frequency Injection . . . 283
High Frequency Injection during Overexcitation Deceleration . . . 278
High Performance Operation Using OLV or CLV . . . 100
High Slip Braking . . . 276
High Slip Braking Current Limit . . . 277
High Slip Braking Deceleration Frequency Width . . . 276
High Slip Braking Dwell Time at Stop . . . 277
High Slip Braking oL . . . 302
High Slip Braking Overload Time . . . 277
High Slip Suppression Current Level . . . 278
High-slip Braking . . . 315
High-Slip Braking Current Limit . . . 440
High-Slip Braking Deceleration Frequency Width . . . 440
High-Slip Braking Dwell Time at Stop . . . 440
High-slip Braking oL . . . 315
High-Slip Braking Overload Time . . . 315, 440
High-Slip Suppression Current Level . . . 440
Hoist Application . . . 105
HSB . . . 276
Humidity . . . 40
Hunting Prevention . . . 275
Hunting Prevention Gain . . . 296
Hunting Prevention Gain Setting . . . 275, 439
Hunting Prevention Gain while in Reverse . . . 275, 440
Hunting Prevention Selection . . . 275, 439
Hunting Prevention Time Constant . . . 275, 439
HVAC Fan Application . . . 104

I

I Control . . . 152
iFEr . . . 332
IG . . . 73
IGBT Maintenance . . . 450
IGBT Maintenance Setting . . . 289, 443
IGBT Maintenance Time (50%) . . . 322
IGBT Maintenance Time (90%) . . . 323
Induced Noise . . . 383
Induced Voltage Constant Unit Selection . . . 118
Induction Voltage Error . . . 330
Inertia Detection Error . . . 330
Inertia Tuning . . . 110
Inertia Tuning Frequency Reference . . . 119
Inertia Tuning Reference Amplitude . . . 119
Initial Operation . . . 98
Initial Rotor Position Detection Selection . . . 281
Initial Rotor Position Estimation Current . . . 281
Initialization . . . 130
Initialization required . . . 325
Initialize Parameters . . . 124, 131
Input Current . . . 389, 390
Input Fuses . . . 385
Input Phase Loss . . . 302, 316
Input Phase Loss Protection Selection . . . 270, 438

上正科技有限公司
購買、維修 此手冊等設備
電話： 037-466333
Email: service@repairtw.com
Line id: @zzzz
www.repairtw.com

Input Power . . . 389, 390
Input Pulse Monitor . . . 449
Input Terminal Status . . . 447
Input Terminal Status at Previous Fault . . . 449
Input Terminals . . . 97
Input Voltage Setting . . . 194
Inrush Prevention Circuit Fault . . . 318
Inrush Prevention Relay Maintenance Setting . . . 443
Inspection . . . 347, 348
Installation Environment . . . 40
Installation Method Selection . . . 273
Installation Orientation . . . 40
Installation Orientation and Spacing . . . 40
Installation Spacing . . . 41
Installing a Braking Resistor Unit: LKEB type . . . 379
Installing a Braking Resistor: ERF type . . . 379
Installing a Braking Unit: CDBR Type . . . 380
Installing a Leakage Breaker . . . 382
Installing a Molded Case Circuit Breaker (MCCB) . . . 381
Installing a Motor Thermal Overload (oL) Relay on the Drive Output . . . 386
Installing Other Types of Braking Resistors . . . 380
Installing Peripheral Devices . . . 379
Installing the Cooling Fan . . . 354, 356, 362
Insulation Barrier . . . 66
Insulation Cap . . . 65
Integral Limit Setting . . . 155
Integral Operation during Accel/Decel . . . 175
Integral Operation during Accel/Decel for Motor 2 . . . 176
Integral Time Setting (I) . . . 155
Interlock Circuit Example . . . 82
Internal Braking Transistor Protection . . . 274
Internal Dynamic Braking Resistor Protection Selection (ERF type) . . . 269, 438
Inversion Detection . . . 308
Inversion Prevention Detection . . . 308
IP00 Enclosure . . . 31
IP20/NEMA Type 1 Enclosure . . . 31

J

Jog Frequency Reference . . . 180
Jump Frequency . . . 182, 299
Jump Frequency Width . . . 182
Jumper S3 . . . 76
Jumper S5 . . . 76
Jumper S5 Settings . . . 79

K

KEB Acceleration Time . . . 254, 434
KEB Deceleration Time . . . 254, 434
KEB Detection Time . . . 255
KEB Function Related Adjustments . . . 253
KEB Method Selection . . . 255
KEB Operation Using a KEB Input . . . 250
KEB Operation Using L2-02 and KEB Input . . . 251
KEB Operation Using L2-02, Without KEB Input . . . 251
KEB Operation Using L2-10 and KEB Input . . . 252
KEB Operation Using L2-10, Without KEB Input . . . 252
KEB Operation Wiring Example . . . 253
KEB Ride-Thru End Detection . . . 251
KEB Ride-Thru Function . . . 249
KEB Ride-Thru Start . . . 250
KEB Start Output Frequency Reduction . . . 435
Keys and Displays on the Digital Operator . . . 87
kWh . . . 451
kWh Monitor Initial Value Selection . . . 444
kWh Monitor Initialization . . . 289
kWh, Lower 4 Digits . . . 451
kWh, Upper 5 Digits . . . 451

L

L Protection Function . . . 434
Language Selection . . . 130
LCD Display . . . 88
LCD Operator . . . 375
Leakage Inductance Alarm . . . 328
Leakage Inductance Error . . . 330
LED Check . . . 450
LF . . . 301, 310
LF2 . . . 301, 310
Line Driver PG . . . 375
Line-to-Line Motor Resistance Online Tuning . . . 441
Line-to-Line Resistance Error . . . 304, 329
LO/RE . . . 89, 96, 121
LO/RE (LOCAL/REMOTE) Key Function Selection . . . 285
LO/RE LED . . . 89
LO/RE Light . . . 87
Load Current . . . 441
Load Falls When Brake is Applied . . . 339
Load Inertia . . . 283, 442
Load Inertia Ratio . . . 175, 261, 315, 436
LOCAL . . . 96
LOCAL/REMOTE Key Function Selection . . . 443
LOCAL/REMOTE Run Selection . . . 142
Locations of Jumpers and Switches on the Terminal Board . . . 76
Loopback Test . . . 489
Loss of Reference Function . . . 263
Low Voltage Directive . . . 510
Low Voltage Wiring . . . 516
Low Voltage Wiring for Control Circuit Terminals . . . 516
LT-1 . . . 321
LT-2 . . . 322
LT-3 . . . 322
LT-4 . . . 322

M

M1 . . . 73
M2 . . . 73
M3 . . . 73
M4 . . . 73
M5 . . . 73
M6 . . . 73
MA . . . 73
Magnetic Flux Compensation Value . . . 145
Main Circuit Connection Diagram . . . 56, 71
Main Circuit Terminal and Motor Wiring . . . 70
Main Circuit Terminal Block Configuration . . . 58
Main Circuit Terminal Functions . . . 65
Main Circuit Terminal Wiring . . . 71, 515
Main Circuit Wiring . . . 65
Main Power Circuit Voltage Adjustment Gain . . . 435
Maintenance . . . 349, 350
Maintenance Alarms . . . 349
Maintenance Monitor Settings . . . 288
Maintenance Monitors . . . 291, 450
Master Speed Reference Lower Limit . . . 182
Max. Motor Capacity . . . 30
Maximum Applicable Motor Capacity . . . 389, 390
Maximum Output Frequency . . . 197, 389, 390
Maximum Output Voltage . . . 389, 390
Maximum Voltage . . . 197
MB . . . 73
MC . . . 73
Mechanical Installation . . . 37
Mechanical Weakening Detection . . . 266
Mechanical Weakening Detection 1 . . . 302, 303, 314, 323

上正科技有限公司
購買、維修 此手冊零組件
電話： 037-[illegible]333
Email: service@repairtw.com
Line id: @zzzz
www.repairtw.com

Mechanical Weakening Detection 2 317
Mechanical Weakening Detection Operation 266, 437
Mechanical Weakening Detection Speed Level 267, 437
Mechanical Weakening Detection Start Time 267, 437
Mechanical Weakening Detection Time 267, 437
MECHATROLINK Parameters 213
MEMOBUS/Modbus Comm. Test Mode Complete 323
MEMOBUS/Modbus Communication 73
MEMOBUS/Modbus Communication Error 301, 302, 306, 320
MEMOBUS/Modbus Communication Test Mode Error 323
MEMOBUS/Modbus Communications 477
MEMOBUS/Modbus Communications Reference 451
MEMOBUS/Modbus Data Table 491
MEMOBUS/Modbus Error Code 448
MEMOBUS/Modbus Error Codes 504
MEMOBUS/Modbus Setup Parameters 482
MEMOBUS/Modbus Specifications 479
MEMOBUS/Modbus Switch Settings 80
MEMOBUS/Modbus Termination 80
MEMOBUS/Modbus Test Mode Complete 303
Menu Structure for Digital Operator 90
Message Format 487
Mid Output Voltage A 296, 297
Middle Output Frequency 197
Middle Output Frequency 2 197
Middle Output Frequency Voltage 197
Middle Output Frequency Voltage 2 197
Minimum KEB Time 255
Minimum Output Frequency 197
Minimum Output Frequency Voltage 197
Minimum Output Voltage 296, 297
Minimum Wait Time for Sending Messages 486
Minor Alarms 302
Minor Fault 329
Minor Fault and Alarm Displays 302
Minor Faults 302
Minor Faults and Alarms 300, 302
Model Number and Nameplate Check 29
Model, Voltage Class, Capacity Mismatch 332
Modes 91
Momentary Overcurrent Protection 391
Momentary Power Loss Minimum Baseblock Time 254, 434
Momentary Power Loss Operation Selection 249, 434
Momentary Power Loss Ride-Thru 249, 391
Momentary Power Loss Ride-Thru Time 254, 434
Momentary Power Loss Voltage Recovery Ramp Time 254, 434
Monitor Output 73
Monitor Parameters 291, 447
Most Recent Fault 450
Motor 1 Parameters 198
Motor 1/Motor 2 Selection 114
Motor 2 ASR Gain Switching Frequency 176
Motor 2 ASR Integral Limit 176
Motor 2 ASR Integral Time 175
Motor 2 ASR Limit 176
Motor 2 ASR Primary Delay Time Constant 176
Motor 2 ASR Proportional Gain 175
Motor 2 Base Frequency 201
Motor 2 Base Voltage 201
Motor 2 Control Mode Selection 201
Motor 2 Inertia 177
Motor 2 Iron Loss 203
Motor 2 Leakage Inductance 203
Motor 2 Line-to-Line Resistance 203
Motor 2 Load Inertia Ratio 177
Motor 2 Max Output Frequency 201
Motor 2 Max Voltage 201
Motor 2 Mechanical Loss 203
Motor 2 Mid Output Frequency 201
Motor 2 Mid Output Frequency 2 201
Motor 2 Mid Output Frequency Voltage 201
Motor 2 Mid Output Frequency Voltage 2 201
Motor 2 Minimum Output Frequency 201
Motor 2 Minimum Output Frequency Voltage 201
Motor 2 Motor Iron-Core Saturation Coefficient 1 203
Motor 2 Motor Iron-Core Saturation Coefficient 2 203
Motor 2 Motor Poles 203
Motor 2 Parameters 202
Motor 2 Rated Current 202
Motor 2 Rated No-Load Current 202
Motor 2 Rated Power 204
Motor 2 Rated Slip 202
Motor 2 Slip Compensation Gain 169
Motor 2 Slip Compensation Limit 169
Motor 2 Slip Compensation Primary Delay Time 169
Motor 2 Slip Compensation Selection during Regeneration 170
Motor 2 Torque Compensation Gain 171
Motor Acceleration Time 279
Motor Acceleration Time for Inertia Calculations 261, 436
Motor Base Frequency 113, 115, 444
Motor Base Speed 115, 444
Motor Code Selection 204, 463
Motor Data Error 304, 329
Motor d-Axis Current at Previous Fault 449
Motor d-Axis Inductance 205
Motor Direction at Power Up when Using Operator 287, 443
Motor Direction Error 329
Motor Does Not Rotate 337
Motor Excitation Current (Id) 452
Motor Hunting and Oscillation Control Parameters 299
Motor Induction Voltage Constant 1 205
Motor Induction Voltage Constant 2 205
Motor Inertia 119, 175
Motor Iron Core Saturation Coefficient Error 304
Motor Iron Loss 116, 445
Motor Iron Loss for Torque Compensation 200
Motor Iron-Core Saturation Coefficient 328
Motor Iron-Core Saturation Coefficient 1 199
Motor Iron-Core Saturation Coefficient 2 199
Motor is Too Hot 338
Motor Leakage Inductance 199
Motor Line-to-Line Resistance 199
Motor Mechanical Loss 200
Motor No-Load Current 116, 199
Motor Overheat 303, 322
Motor Overheat 1 (PTC input) 302
Motor Overheat 2 (PTC input) 302
Motor Overheat Alarm (PTC Input) 313
Motor Overheat Alarm Operation Selection 248, 434
Motor Overheat Fault (PTC Input) 313
Motor Overheat Fault Operation Selection 248, 434
Motor Overload 302, 314
Motor Overload Estimate (oL1) 451
Motor Overload Protection Selection 244, 434, 516
Motor Overload Protection Time 246, 434, 517
Motor Parameters 194
Motor Performance Fine-Tuning 296
Motor Poles 113
Motor Produces Insufficient Torque 340
Motor Protection 244
Motor Protection Function 314

上正科技有限公司
購買、維修 此手冊等組件
電話： 037-466333
Email: service@repairtw.com
Line id: @zzzz
www.repairtw.com

Motor Protection Using a Positive Temperature Coefficient 247
Motor PTC Characteristics 247
Motor Pull Out or Step Out Detection 317
Motor q-Axis Current at Previous Fault 449
Motor q-Axis Inductance 205
Motor Rated Current 113, 115, 198, 204, 444, 516
Motor Rated Power 115, 200, 204, 444
Motor Rated Slip 116, 198
Motor Rated Voltage 113, 115, 444
Motor Rotates After the Drive Output is Shut Off 341
Motor Rotates Faster Than the Frequency Reference 339
Motor Rotates in One Direction Only 338
Motor Secondary Current (Iq) 452
Motor Selection 219
Motor Selection 1/2 444
Motor Speed 447
Motor Speed at Previous Fault 449
Motor Speed Error 304
Motor Speed Error 2 330
Motor Speed Fault 330
Motor Stalls During Acceleration or With Large Loads 338
Motor Stator Resistance 205
Motor Switch during Run 323
Motor Temperature Input Filter Time 248, 434
Motor Wiring 70
Mounting Hole 32, 33, 34
MP 73
Multi-Function Analog Input Selection Error 304, 326
Multi-Function Analog Input Terminal Settings 237
Multi-Function Analog Inputs 234
Multi-Function Analog Output Terminal AM Bias 240
Multi-Function Analog Output Terminal AM Gain 240
Multi-Function Analog Output Terminal AM Monitor Selection 240
Multi-Function Analog Output Terminal AM Signal Level Selection 241
Multi-Function Analog Output Terminal FM Bias 240
Multi-Function Analog Output Terminal FM Gain 240
Multi-Function Analog Output Terminal FM Monitor Selection 240
Multi-Function Analog Output Terminal FM Signal Level Selection 241
Multi-Function Analog Outputs 239
Multi-Function Digital Input Terminal Settings 214
Multi-Function Digital Inputs 72, 214
Multi-Function Digital Output 73
Multi-Function Digital Output Terminal Settings 225
Multi-Function Digital Outputs 224
Multi-Function Input Selection Error 325
Multi-Function Input Setting Error 304
Multiple Drive Installation 41
Multiple Drive Wiring 71
Multi-Step Speed Selection 180

N

n Advanced Performance Set Up 439
n1 Hunting Prevention 439
n2 296
Nameplate 29
Navigating the Drive and Programming Modes 91
ND 177
ndAT 332
NEMA 1 Kit 375
NetRef/ComRef Function Selection 212
Network Termination 481
Noise Filter 383
Noise From the Drive or Output Lines When the Drive is Powered On 340
No-Load Current Alarm 328
No-Load Current Error 304, 329
No-Load Operation 121
No-Load Operation Test Run 121
Normal Duty 30, 177, 388
Normal Duty Ratings 388
Notes on Controlling the Brake when Using the Hoist Application Preset 106
Notes on Inertia Tuning and ASR Gain Auto-Tuning 112
Notes on Motor Operation 21
Notes on Rotational Auto-Tuning 111
Notes on Stationary Auto-Tuning 111
nSE 301
Number of Auto Restart Attempts 264, 437
Number of Motor Poles 115, 199, 204, 444
Number of PM Motor Poles 118
Number of Run Commands 450
Number of Run Commands Counter Initialization 289
Number of Speed Search Restarts 151

O

oC 301, 311
oFA00 . . . . . 301, 311
oFA01 . . . . . 301, 311
oFA03 to oFA06 311
oFA10 311
oFA11 311
oFA12 to oFA17 311
oFA30 to oFA43 . . . . . 301, 311
oFb00 312
oFb01 312
oFb02 312
oFb03 to oFb11 312
oFb12 to oFb17 312
oFb30 to oFb43 312
oFC00 312
oFC01 312
oFC02 312
oFC03 to oFC11 313
oFC12 to oFC17 313
oFC30 to oFC43 313
Offset Frequency 193, 452
oH 302, 303, 313, 322
oH1 . . . . . 302, 313
oH2 . . . . . 303, 322
oH3 . . . . . 302, 303, 313, 322
oH4 . . . . . 302, 313
oL1 . . . . . 302, 314
oL2 . . . . . 302, 314, 341
oL2 Characteristics Selection at Low Speeds 272, 438
oL3 . . . . . 302, 303, 314, 322
oL4 . . . . . 302, 303, 314, 322
oL5 . . . . . 302, 303, 314, 323
oL7 . . . . . 302, 315
Online Tuning Gain 281
Online Tuning Selection 280
oPE 325
oPE Fault Parameter 325, 448
oPE01 . . . . . 304, 325
oPE02 . . . . . 304, 325
oPE03 . . . . . 304, 325
oPE04 . . . . . 304, 325
oPE05 . . . . . 304, 326
oPE06 . . . . . 304, 326
oPE07 . . . . . 304, 326

上正科技有限公司
購買、維修 此手冊零組件
電話：037-462233
Email: service@repairtw.com
Line id: @zzzz
www.repairtw.com

oPE08 . . . . . 304, 326
oPE09 . . . . . 304, 326
oPE10 . . . . . 304, 327
oPE11 . . . . . 304, 327
oPE13 . . . . . 304, 327
oPE15 327
oPE18 304
Open Loop Vector Control 28, 297, 306, 339, 340
Open Loop Vector Control for IPM Motors 28
Open Loop Vector Control for PM Motors 28
Open Loop Vector Control Mode Tuning 296
Open Loop Vector Control Mode Tuning Parameters . . . 297, 298
Open Loop Vector Control Mode Tuning Parameters 296, 297, 298
Operating with the Load Connected 123
Operation Error Displays 304
Operation Errors 300, 304
Operation Selection at Deviation (dEv) 207
Operation Selection at Overspeed (oS) 206
Operation Selection at PG Open Circuit (PGo) 206
Operation Selection when Digital Operator is Disconnected 287, 443
Operation Status Monitors 291, 447, 452
Operation with Permanent Magnet Motors 101
Operator Connection Fault 302
Operator Programming Errors 325
Operator Related Parameters 442
Operator Related Settings 284
oPr 302, 315
Option Card Communications Error 302
Option Card Connection Error at Option Port CN5-A 311
Option Card Connection Error at Option Port CN5-C 312
Option card connector (CN5-A) 35
Option card connector (CN5-B) 35
Option card connector (CN5-C) 35
Option card error occurred at option port CN5-A 311
Option card error occurred at option port CN5-B 312
Option card error occurred at option port CN5-C 313
Option Card External Fault 301, 309, 320
Option Card Fault at Option Port CN5-A 311
Option Card Fault at Option Port CN5-B 312
Option Card Fault at Option Port CN5-C 312
Option Card Installation 377
Option Communication Error 301, 306, 319
Option Frequency Reference 451
Option Settings 206
Option Unit Fault 301
Optional 24 V DC Power Supply Connector Cover 32
Optional 24 V DC power supply connector cover 33, 34
Options 373
oS 302, 303, 315, 323
Oscillation or Hunting 340
Output Current 447
Output Current 1 During Speed Search 150
Output Current at Previous Fault 449
Output Current Imbalance 310
Output Frequency 447
Output Frequency after Soft Start 448
Output Frequency at Previous Fault 449
Output Frequency is not as High as Frequency Reference 341
Output Frequency Reduction During Overheat Alarm 270
Output Frequency Resolution 391
Output Ground Fault Detection Selection 271, 438
Output of speed control (ASR) (for Simple V/f PG) 452
Output Phase Loss 301, 310
Output Phase Loss Protection 438
Output Phase Loss Protection Selection 270
Output Power 447
Output Power at Previous Fault 449
Output Terminal Status 448
Output Terminal Status at Previous Fault 449
Output Voltage at Previous Fault 449
Output Voltage Detection Fault 318, 324
Output Voltage Limit 283
Output Voltage Limit Operation Selection 169
Output Voltage Reference 447
Output Voltage Reference (Vd) 452
Output Voltage Reference (Vq) 452
ov 302, 303, 315, 323
ov Suppression Function Selection 435
Overcurrent 301, 311
Overcurrent Detection Gain 272, 439
Overexcitation Deceleration 277
Overexcitation Deceleration Gain 278, 311, 440
Overexcitation Operation Selection 278, 440
Overheat 1 (Heatsink Overheat) 313
Overheat Alarm Level 269, 438
Overheat Pre-Alarm Operation Selection 269, 438
Overload Protection 391
Overload Tolerance 389, 390
Overspeed (for Control Mode with PG) 315, 323
Overspeed (for Simple V/f with PG) 302, 303
Overspeed Detection Delay Time 206
Overspeed Detection Level 206
Overtorque 1 . . . . . 303, 322
Overtorque 2 . . . . . 303, 322
Overtorque Detection 1 . . . . . 302, 314
Overtorque Detection 2 . . . . . 302, 314
Overtorque Detection Operation 265
Overvoltage 302, 303, 315
Overvoltage Protection 391
Overvoltage Suppression Function 260
Overvoltage Suppression Function Selection 260

P

P Control 152
Parameter Access Level 124
Parameter Range Setting Error 325
Parameter Selection Error 304, 326
Parameter Setting Range Error 304
Parameter Settings 92
Parameters for KEB Ride-Thru 253
Parameters that Change with the Motor Code Selection 463
Parameters to Minimize Motor Hunting and Oscillation 299
PASS 303, 323
Password 124, 132
Password Setting 132
Password Settings 124
Peak Hold Current 451
Peak Hold Output Frequency 451
Performance Life 349
Performance Life Monitors Maintenance Monitors 349
Periodic Inspection 348
Periodic Maintenance 349
Peripheral Devices 373
Permanent Magnet Motor Control 101
PF 302, 316
PG 1 Division Rate for PG Pulse Monitor 207
PG 1 Gear Teeth 1 207
PG 1 Gear Teeth 2 207
PG 1 Pulses Per Revolution 206
PG 1 Rotation Selection 207
PG 1 Signal Selection 208
PG 2 Division Rate for PG Pulse Monitor 207

上此科技有限公司
購買、維修 此手冊各種型
電話： 037-466333
Email: service@repairtw.com
Line id: @zzzz
www.repairtw.com

PG 2 Gear Teeth 1 . . . 207
PG 2 Gear Teeth 2 . . . 207
PG 2 Pulses Per Revolution . . . 206
PG 2 Rotation Selection . . . 207
PG 2 Signal Selection . . . 208
PG Disconnect (for any control modes using a PG option card) . . . 316
PG Disconnect (for Control Mode with PG) . . . 323
PG Disconnect (for Simple V/f with PG) . . . 302, 303
PG Hardware Fault (detected when using a PG-X3 option card) . . . 316, 323
PG Number of Pulses Per Revolution . . . 116
PG Number of Pulses Per Revolution for PM Motor Tuning . . . 119
PG Open-Circuit Detection Time . . . 206
PG Option Card Disconnection Detection 1 . . . 208
PG Option Card Disconnection Detection 2 . . . 208
PG Option Card Port for Motor 2 Selection . . . 208
PG Speed Control Card Settings . . . 206
PG-B3 . . . 375
PG-B3 Settings . . . 206
PGo . . . 302, 303, 316, 323
PGoH . . . 316, 323
PG-X3 . . . 375
PG-X3 Settings . . . 206
Phase Order Selection . . . 143
PID Accel/Decel Time . . . 159
PID Block Diagram . . . 154
PID Control . . . 152
PID Control Selection Error . . . 304
PID Control Selection Fault . . . 326
PID Feedback . . . 451
PID Feedback High Detection Level . . . 158
PID Feedback High Detection Time . . . 158
PID Feedback Input Methods . . . 153
PID Feedback Loss . . . 301, 303, 310, 321
PID Feedback Loss Detection Selection . . . 157
PID Feedback Low Detection Level . . . 158
PID Feedback Low Detection Time . . . 158
PID Fine Tuning . . . 160
PID Function Setting . . . 155
PID Input (feedback) . . . 451
PID Input Limit . . . 160
PID Monitors . . . 291, 451
PID Offset Adjustment . . . 156
PID Output . . . 452
PID Output Fault . . . 340
PID Output Gain Setting . . . 156
PID Output Level Selection . . . 156
PID Output Limit . . . 155
PID Output Lower Limit . . . 160
PID Output Reverse Selection . . . 156
PID Primary Delay Time Constant . . . 156
PID Setpoint . . . 452
PID Setpoint Display Digits . . . 160
PID Setpoint Input Methods . . . 153
PID Setpoint Scaling . . . 159
PID Setpoint Selection . . . 159
PID Setpoint User Display . . . 160
PID Setpoint Value . . . 159
PID Sleep . . . 158
PID Sleep Delay Time . . . 159
PID Sleep Function Start Level . . . 158
PM Inductance Error . . . 330
PM Motor Auto-Tuning Mode Selection . . . 116
PM Motor Base Frequency . . . 117
PM Motor Base Speed . . . 118
PM Motor Code Selection . . . 117
PM Motor Control Tuning . . . 281
PM Motor d-Axis Inductance . . . 118
PM Motor Induced Voltage Constant . . . 118
PM Motor Parameter Settings . . . 110
PM Motor q-Axis Inductance . . . 118
PM Motor Rated Current . . . 117
PM Motor Rated Power . . . 117
PM Motor Rated Voltage . . . 117
PM Motor Settings . . . 204
PM Motor Stator Resistance . . . 118
PM Motor Type . . . 117
PM Speed Feedback Detection Suppression Gain . . . 315
PM Stationary Auto-Tuning . . . 110
PM Stationary Auto-Tuning for Stator Resistance . . . 110
Pole Attraction Current . . . 281
Power Detection Filter Time . . . 163
Power Ratings (Three-Phase 200 V Class) . . . 389
Power Ratings (Three-Phase 400 V Class) . . . 390
Powerboard Failure . . . 307
Powering Up the Drive . . . 102
Predefined V/f Patterns . . . 194
Preface . . . 16
Preparing the Ends of Shielded Cables . . . 75
Preset Reference Timing Diagram . . . 181
Previous Fault . . . 449
PROFIBUS-DP Parameters . . . 211, 213
Programming Mode . . . 91, 92
Proportional Gain Setting (P) . . . 155
Protecting cover to prevent miswiring . . . 35
PTC . . . 247
Pull-In Current . . . 282, 441
Pull-In Current Compensation Time Constant . . . 282, 315, 441
Pull-In Current during Accel/Decel for PM . . . 317
Pull-In Current Level for PM Motor Tuning . . . 118
Pull-Out Detection . . . 302
Pulse Monitor Selection Error . . . 327
Pulse Output Connection Using External Voltage Supply . . . 78
Pulse Output Connection Using Internal Voltage Supply . . . 78
Pulse Train Input Bias . . . 243
Pulse Train Input Filter Time . . . 243
Pulse Train Input Gain . . . 243
Pulse Train Input Minimum Frequency . . . 243
Pulse Train Input Scaling . . . 242
Pulse Train Input Terminal RP Function Selection . . . 241
Pulse Train Input/Output . . . 241
Pulse Train Monitor Scaling . . . 243
Pulse Train Monitor Selection . . . 243

Q

q-axis ACR Output . . . 452

R

R- . . . 73
R+ . . . 73
R/L1 . . . 65
Radiated Noise . . . 383
Ramp to stop . . . 138
Rated Current Depending on Carrier Frequency . . . 179
Rated Current Setting Alarm . . . 304, 328
Rated Output Capacity . . . 389, 390
Rated Output Current . . . 389, 390
Rated Slip Error . . . 304, 329
Rated Voltage, Rated Frequency . . . 389, 390
rdEr . . . 333
READ . . . 287
rEAd . . . 333
Reading Drive MEMOBUS/Modbus Register Contents . . . 489

上正科技有限公司
購買、維修 此手冊零組件
電話：037-456333
Email: service@repairtw.com
Line id: @zzzz
www.repairtw.com

Reading Parameter Settings 333
Reattaching the Digital Operator 61
Reattaching the Front Cover. 63
Reattaching the Terminal Cover on an IP00 Enclosure Drive 60
Reattaching the Terminal Cover on an IP20/NEMA Type 1 Enclosure Drive 59
Reattaching the Top Protective Cover 64
REMOTE 96
Removing the Cooling Fan (2A0110) 355
Removing the Cooling Fan (2A0169, 2A0211, 4A0139, 4A0165) 359
Removing the Digital Operator 61
Removing the Fan Cover 353
Removing the Front Cover 61
Removing the Terminal Cover on an IP00 Enclosure Drive 60
Removing the Terminal Cover on an IP20/NEMA Type 1 Enclosure Drive 59
Removing the Top Protective Cover 64
Removing Wires from the Terminal Board 75
Replacement Parts 349
Replacing the Drive 370
Reset Communication Parameters 212
Resistance Tuning Error 328
Response Messages from Drive to Master 486
Reverse Direction Output Example Time Chart. 231
Reverse Operation Selection 140
Reverse Prohibited Error 330
Reverse Regenerative Torque Limit 268, 438
Reverse Torque Limit 268, 438
rF. 316
rH 302, 316
Rotational Auto-Tuning 109, 111
Rotational Auto-Tuning for V/f Control 109
RP 72
rr 302, 316
RS-422 Interface. 481
RS-422/485 Termination Resistor 76
RS-485 Interface. 480
RTS Control Selection 483
Rubber Bushing 32
rUn 303, 323
Run Command at Power Up. 143
Run Command Input Error. 303
Run Command Method Selection 484
Run Command Selection 337, 401
Run Command Selection 1 137
Run Command Selection 2 143
Run Command Selection Error 304
Run command selection while in Programming Mode 143
Run Command Source Selection 451
Run Command/Frequency Reference Source Selection Error 326
RUN LED. 89
RUN LED and Drive Operation 89
RUN LED Status and Meaning 89
RUN Light 87

S

S-. 73
S+ 73
S/L2 65
S1 72
S2 72
S3 72
S4 72
S5 72
S6 72
S7 72
S8 72
Safe Disable Circuit 518
Safe Disable Function Wiring Example (Source Mode) 519
Safe Disable Input Function 518
Safe Disable Input Sink / Source / External Power Supply Selection 77
Safe Disable Inputs. 72
Safe Disable Monitor Output Function and Digital Operator Display 520
Safe Disable Signal Input 303, 321
Safety Hazard Definitions. 17
Safety Information 17
Safety Input and EDM Terminal Status 520
Safety Monitor Output 73
Safety Standard. 391
Save Disable Signal Input. 321
SC 72
S-Curve Characteristics 167, 299
SE 303, 323
Search Operation Voltage Limit 164
Self-diagnosing function of the serial communication interface circuits 505
SEr 302, 316
Serial Communication Terminals 73
Serial Communication Transmission Error 302, 319
Serial Communications Cable Connection Terminals (TB5). 480
Serviceable Parts. 369
Setup Group 95
Setup Group Parameters 96
Setup Mode. 95
Shielded Twisted-Pair Cables 75
Short Circuit Brake Time at Start 146
Short Circuit Brake Time at Stop 146
Short Circuit Braking Current 146
Side-by-Side Installation 41
Side-by-Side Mounting. 396
Side-by-Side Setup 41
Simple Motor Setup Using V/f Control 99
Simple Positioning Stop 140
Simplified Setup Using the Setup Group 95
Single Drive KEB Ride-Thru 1 250
Single Drive KEB Ride-Thru 2 250
Sink/source jumper S3 35
Sinking Mode (NPN) 77
Sinking/Sourcing Mode Selection for Safe Disable Inputs 77
Sinking/Sourcing Mode Switch for Digital Inputs 77
Slave Address 487
Slip Compensation 167
Slip Compensation Gain. 167, 297
Slip Compensation Limit 168
Slip Compensation Primary Delay Time 168, 297
Slip Compensation Selection during Regeneration 168
SN 72
Soft Charge Bypass Relay Maintenance. 450
Soft Charge Bypass Relay Maintenance Time 322
Soft Charge Circuit Fault 302
Soft CLA Selection. 439
Soft Starter Speed Reference at Previous Fault 449
Software Current Limit Selection. 272
Software No. (Flash). 449
Software No. (ROM) 449
Software version 29
Sourcing Mode (PNP). 77

上正科技有限公司
購買、維修 此手冊零組件
電話 037-466333
Email: service@repairtw.com
Line id: @zzzz
www.repairtw.com

SP 72
Space Between Drives (Side-by-Side Mounting) 41
Speed Agree 1 Time Chart 226
Speed Agree 2 Time Chart 229
Speed Agreement Detection Level 262, 436
Speed Agreement Detection Level (+/-) 262, 436
Speed Agreement Detection Selection 263
Speed Agreement Detection Width 262, 436
Speed Agreement Detection Width (+/-) 262, 436
Speed Control Accuracy 391
Speed Control Integral Time 1 . . . . . 315, 323
Speed Control Loop Auto-Tuning 110
Speed Control Proportional Gain 1 . . . . . 315, 323
Speed Control Range 391
Speed Deviation (for Control Mode with PG) 308
Speed Deviation (when using a PG option card) 320
Speed Estimation Type Speed Search 147, 315
Speed Feedback Detection Contol (AFR) Tuning 276
Speed Feedback Detection Control (AFR) Gain 276, 440
Speed Feedback Detection Control (AFR) Time Constant 1 . . . . . 276, 440
Speed Feedback Detection Control (AFR) Time Constant 2 . . . . . 276, 440
Speed Feedback Detection Control Gain 282, 441
Speed Feedback Detection Control Gain during ov Suppression 283
Speed Limit 191
Speed Limit Bias 190, 192
Speed Limit Selection 191
Speed Limitation 190
Speed Response 391
Speed Search 146, 316
Speed Search Deactivation Current 149
Speed Search Deceleration Time 149
Speed Search Delay Time 150
Speed Search Detection Compensation Gain 150
Speed Search Estimation Type 314
Speed Search Method Selection 151
Speed Search Restart Current Level 150
Speed Search Restart Detection Time 151
Speed Search Selection at Start 149
Speed Search Wait Time 151
Speed/Torque Control Switchover Time 192
Stall Prevention 255, 299, 315
Stall Prevention Detection Time 262
Stall Prevention during Deceleration 314
Stall Prevention Level during Acceleration 257, 435
Stall Prevention Level during Run 259, 435
Stall Prevention Limit during Acceleration 257, 435
Stall Prevention Selection during Acceleration 256, 435
Stall Prevention Selection during Deceleration 258, 435
Stall Prevention Selection during Run 259, 435
Standard Connection Diagram 54
Starting Torque 391
Start-Up Flowcharts 98
Stationary Auto-Tuning 112
Stationary Auto-Tuning 1 109
Stationary Auto-Tuning 2 109
Stationary Auto-Tuning for Line-to-Line Resistance 109
Stator Resistance Error 330
Status Display 102
STo 302, 317
STOP button Input 304, 329
STOP Key Function Selection 286, 443
Stop Position Gain 188
Stopping Method after Communication Error 482
Stopping Method Selection 138
Storage Temperature 40
SvE 317
Swing PWM 178, 388
Switches and Jumpers on the Terminal Board 76
Switching Between LOCAL and REMOTE 96
Switching Between Torque and Speed Control 190
System KEB Ride-Thru 1 250
System KEB Ride-Thru 2 250

T

T Motor Tuning 444
T/L3 65
Target DC Bus Voltage for Overvoltage Suppression and Stall Prevention 260
Task Complete 332
Temperature Derating 395
Terminal A1 Bias Setting 235
Terminal A1 Function Selection 234
Terminal A1 Gain Setting 235
Terminal A1 Signal Level Selection 234
Terminal A2 Bias Setting 236
Terminal A2 Function Selection 236
Terminal A2 Gain Setting 236
Terminal A2 Input Signal Selection 79
Terminal A2 Signal Level Selection 236
Terminal A3 Analog/PTC Input Selection 79
Terminal A3 Bias Setting 236
Terminal A3 Function Selection 235
Terminal A3 Gain Setting 236
Terminal A3 Signal Level Selection 235
Terminal AM/FM Signal Selection 79
Terminal Block Configuration 57
Terminal Board 32, 33, 34, 35, 369
Terminal Board Connection Error 307
Terminal Board Connector 35
Terminal Board Wiring Guide 75
Terminal Connections for Communication Self-Diagnostics 505
Terminal Cover 32, 33, 59
Terminal cover 34
Terminal Cover 2 34
Terminal Cover Screw 32
Terminal M1-M2 Function Selection 224
Terminal M1-M2 Output Selection 211
Terminal M3-M4 Function Selection 224, 383
Terminal M3-M4 Output Selection 211
Terminal M5-M6 Function Selection 224
Terminal P1-PC Output Selection 211
Terminal P2-PC Output Selection 211
Terminal P3-PC Output Selection 211
Terminal P4-PC Output Selection 211
Terminal P5-PC Output Selection 211
Terminal P6-PC Output Selection 211
Terminal V1 Monitor Bias 210
Terminal V1 Monitor Gain 210
Terminal V1 Monitor Selection 210
Terminal V1 Signal Level 210
Terminal V2 Monitor Bias 210
Terminal V2 Monitor Gain 210
Terminal V2 Monitor Selection 210
Terminal V2 Signal Level 210
Termination 80
Test Run 111, 112, 113, 114, 121
Test Run Checklist 126
Test Run with Load Connected 123
Tightening Torque 66
Timer Function Off-Delay Time 151

上正科技有限公司
購買、維修 此手冊要給你
電話：037-4[illegible]
Email: service@repairtw.com
Line id: @zzzz
www.repairtw.com

Timer Function On-Delay Time 151
Too Many Speed Search Restarts 302, 316
Top Protective Cover 32, 64
Top Protective Covers, Reattaching 60
Top Protective Covers, Removing 59, 60
Torque Compensation 170
Torque Compensation at Forward Start 171
Torque Compensation at Reverse Start 171
Torque Compensation Gain 170, 296
Torque Compensation Primary Delay Time 170, 296
Torque Compensation Primary Delay Time 2 171
Torque Compensation Primary Delay Time Constant 1 297
Torque Compensation Primary Delay Time Constant 2 296
Torque Compensation Time Constant 171
Torque Control 188
Torque Control Block Diagram 188
Torque Control Input Value Selection 188
Torque Control Reference Sources 188
Torque Control Selection 191
Torque Control Setting Error 327
Torque Control Signal Polarity 189
Torque Detection 264
Torque Detection Level 1 . . . . . 266, 437
Torque Detection Level 2 . . . . . 266, 437
Torque Detection Selection 1 . . . . . 265, 437
Torque Detection Selection 2 . . . . . 265, 437
Torque Detection Time 1 . . . . . 266, 437
Torque Detection Time 2 . . . . . 266, 437
Torque Limit 267, 391
Torque Limit Control Method Selection during Accel/Decel 268, 438
Torque Limit Integral Time Constant 268, 438
Torque Limit Process at Start 268
Torque Limits 299
Torque Reference 447
Torque Reference / Torque Limit Selection from Comm. Option 212
Torque Reference at Previous Fault 449
Torque Reference Delay Time 191
Torque Saturation Error 330
Torque Specifications, Three Phase 200 V Class 67
Torque Specifications, Three Phase 400 V Class 68
Traveling Application 108
Troubleshooting 293
Troubleshooting without Fault Display 336
TrPC 323
Tuning Errors 300
Types of Alarms, Faults, and Errors 300
Types of Auto-Tuning for Induction Motors 109
Types of Auto-Tuning for Permanent Magnet Motors 110

U

U Monitors 447
U/T1 65
U2, U3 Initialization 289, 443
UL Standards 515
UL Standards Compliance 515
UL3 . . . . . 302, 303, 317, 324
UL4 . . . . . 302, 303, 317, 324
UL5 . . . . . 303, 317
Undertorque 1 303
Undertorque 2 303
Undertorque Detection 1 . . . . . 302, 317, 324
Undertorque Detection 2 . . . . . 302, 317, 324
Undertorque Detection Operation 265
Undervoltage 302, 303, 324
Undervoltage 3 318
Undervoltage 3 (Soft-Charge Bypass Circuit Fault) 318
Undervoltage Detection Level (Uv) 434
Undervoltage Detection Level (Uv1) 254
Undervoltage Protection 391
Unexpected Noise from Connected Machinery 340
Unidirectional Speed Limit Bias 192
Unit Code 286
Unit Selection for MEMOBUS/Modbus Register 0025H 483
Unstable Motor Speed when Using PM 341
Up/Down 2 Function 183
Up/Down 2 Operations 223
Up/Down Command Operation 218
Up/Down Frequency Reference Limit Selection 187
USB Copy Unit 125, 375
USB Port (type-B) 32
USB port (type-B) 32, 33, 34, 81
User Monitor Selection after Power Up 284, 442
User Parameter Automatic Selection 124, 135, 400
User Parameter Default Value 124, 286, 443
User Parameters 124
User Parameters 1 to 32 . . . . . 124, 135, 400
User Set Speed Agree 1 Time Chart 226
User Set Speed Agree 2 Example with a Positive L3-04 Value 230
User-Set Display Units Decimal Display 285
User-Set Display Units Maximum Value 285
Using Braking Units in Parallel 381
Using the Pulse Train Output 78
Using the Safe Disable Function 518
Uv 303, 324
Uv1 . . . . . 302, 317
Uv2 . . . . . 302, 318
Uv3 . . . . . 302, 318

V

V 72
V/f Characteristics 391
V/f Control 28
V/f Control Mode Tuning 296
V/f Control Mode Tuning Parameters 296
V/f control using motor speed feedback 28
V/f Control with Simple Speed Feedback 242
V/f Data Setting Error 304, 327
V/f Gain During Speed Search 150
V/f Pattern Default Values 456
V/f Pattern Defaults 456
V/f Pattern Display Unit 285
V/f Pattern for Motor 1 194
V/f Pattern for Motor 2 201
V/f Pattern Selection 194, 339
V/T2 65
vAEr 333
VERIFY 287
Verify Menu 94
Verifying Parameter Changes 94
vFyE 333
voF 318, 324
Voltage Class, Capacity Mismatch 333
Voltage Error Compensation Time Constant 282
vrFy 333

W

W/T3 65
Warranty Information 24
Water Supply Pump Application 103
Watt Hour Output Example 234
Watt Hour Output Unit Selection 234
Watt Loss 200 V Class Three Phase Models 393

上正科技有限公司
購買 維修 此手冊零組件
電話： 037-466333
Email: service@repairtw.com
Line id: @zzzz
www.repairtw.com

Watt Loss 400 V Class Three Phase Models 393
Wire Gauge, Three Phase 200 V Class 67
Wire Gauge, Three Phase 400 V Class 68
Wire Gauges 66, 74
Wiring Checklist 83
Wiring Diagram for 2-Wire Sequence 221
Wiring Distance 178
Wiring the Control Circuit Terminal 74
WRITE 287
Writing Parameter Settings 332
Writing to Multiple Registers 489

Z

Z Pulse Correction Error 331
Z Pulse Fault 308
Z Pulse Noise Fault Detection 308
Z Pulse Offset Tuning 110
Zero Servo 164
Zero Servo Completion Width 164
Zero Servo Fault 317
Zero Servo Gain 164
Zero-Speed Time Chart 226

上正科技有限公司
購買、維修 此手冊零組件
電話： 037-466333
Email: service@repairtw.com
Line id: @zzzz
www.repairtw.com

Revision History

The revision dates and the numbers of the revised manuals appear on the bottom of the back cover.

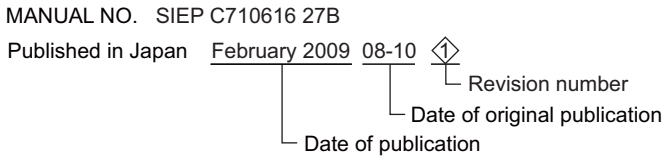

Date of Publication	Revision Number	Section	Revised Content
July 2009	◇2	All	Addition: Larger drive capacities added along with corresponding data Three-phase 400V: CIMR-A□4A0414 to 0675 Revision: Review and corrected entire documentation
February 2009	◇1	All	Addition: ・Larger drive capacities added along with corresponding data Three-phase 200V: CIMR-A□2A0250 to 0415 Three-phase 400V: CIMR-A□4A0208 to 0362 ・H1-□□ = 47 (Node Setup) Revision: Review and corrected entire documentation
October 2008	–	–	First Edition

上正科技有限公司
購買、維修 此手冊零組件
電話： 037-466333
Email: service@repairtw.com
Line id: @zzzz
www.repairtw.com

YASKAWA AC Drive A1000
High Performance Vector Control Drive
Technical Manual

EUROPEAN HEADQUARTERS
YASKAWA ELECTRIC EUROPE GmbH
Hauptstraβe 185, 65760 Eschborn, Germany
Phone: +49 (0)6196 569 300 Fax: +49 (0)6196 569 398
E-mail: info@yaskawa.de Internet: http://www.yaskawa.eu.com

YASKAWA ENGINEERING EUROPE GmbH
Hauptstraβe 185, 65760 Eschborn, Germany
Phone: +49 (0)6196 569 520 Fax: +49 (0)6196 569 598
E-mail: service@yaskawa.de Internet: http://www.yaskawa-eng.eu.com

UNITED KINGDOM
YASKAWA ELECTRIC EUROPE GmbH
Unit 3, Centurion Court, Brick Close, Kiln Farm, Milton Keynes, Bucks MK11 3JB, United Kingdom
Phone: +44 (0)1908 556815 Fax: +44 (0)1908 565891
Internet: http://www.yaskawa.eu.com

ITALY
YASKAWA ELECTEIC EUROPE GmbH
Via TRABUCCHI N°28 41013 Castelfranco E.(MO), Italy
Phone: +39 (0)59 92 2121 Fax: +39 (0)59 92 2168
E-mail: info@yaskawa.it Internet: http://www.yaskawa.eu.com

U.S.A.
YASKAWA ELECTRIC AMERICA, INC.
2121 Norman Drive South, Waukegan, IL 60085, U.S.A.
Phone: (800) YASKAWA (800-927-5292) or +1 847 887 7000 Fax: +1 847 887 7370
Internet: http://www.yaskawa.com

JAPAN
YASKAWA ELECTRIC CORPORATION
New Pier Takeshiba South Tower, 1-16-1, Kaigan, Minatoku, Tokyo, 105-0022, Japan
Phone: +81 (0)3 5402 4511 Fax: +81 (0)3 5402 4580
Internet: http://www.yaskawa.co.jp

上正科技有限公司
購買、維修 此手冊零組件
電話： 037-466333
Email: service@repairtw.com
Line id: @zzzz
www.repairtw.com

YASKAWA ELECTRIC CORPORATION

YASKAWA

In the event that the end user of this product is to be the military and said product is to be employed in any weapons systems or the manufacture thereof, the export will fall under the relevant regulations as stipulated in the Foreign Exchange and Foreign Trade Regulations. Therefore, be sure to follow all procedures and submit all relevant documentation according to any and all rules, regulations and laws that may apply.

Specifications are subject to change without notice for ongoing product modifications and improvements.

© 2008-2009 YASKAWA ELECTRIC CORPORATION. All rights reserved.

MANUAL NO. SIEP C710616 27C

Published in Japan July 2009 08-10 ◇2◇-0
09-1-2_YEG